Series **Ergonomic**

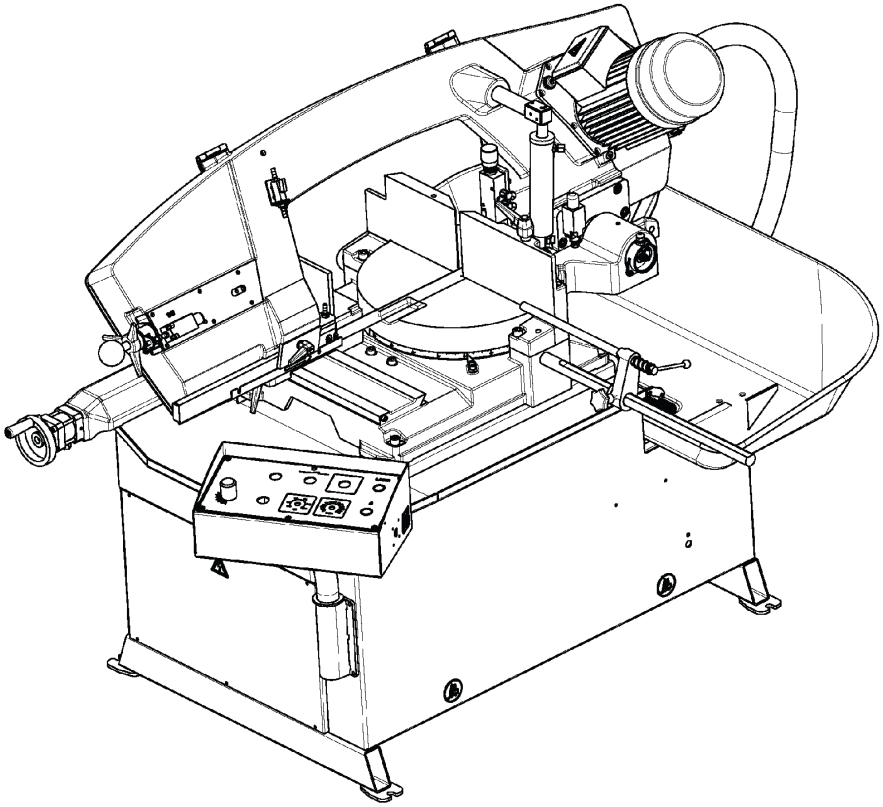

Ergonomic 320.258 DGH

Operating instructions

Before transporting and using the machine, please read the instructions thoroughly!

Seriové číslo / Serien Nummer / Serial Number _____

Service and information

Your BOMAR dealer:

Direct BOMAR contact:

BOMAR spol. s r.o.
Těžební 1236/1
62700 Brno
Czech Republic, EU

telefon: +420 – 533 426 100
fax: +420 – 533 426 109
e-mail: info@bomar.cz
www: http://www.bomar.cz

We are available:

Mondays to Fridays 7^{00} – 16^{00}

Version:

1.10 / March 2019

rev. 1

BOMAR, spol. s r.o. © – Subject to modifications and amendments.

EC/EU Declaration of Conformity

[1) 2)] We:

BOMAR, spol. s r.o.
Těžební 1236/1
627 00 Brno, Czech Republic
Id. No: 48908827

declare herewith

that the following designated device based on its conception and construction as well as the design launched by us meets the relevant basic safety requirements of the decrees of the government.

This statement applies exclusively to the machine device in conditions in which it was brought to the market. It does not apply to parts subsequently added by the end user or to modifications performed subsequently by the end user.

In the event of any device modification not approved by us this declaration shall lose its validity

Name:	**Band Saw**
Type :	**Ergonomic 320.258 DGH, HBS 250 HA**
Serial number:	011-999
Manufacturer	**BOMAR, spol. s r.o., Těžební 1236/1, 627 00 Brno**

Product data

Determination:	for cross dividing and cutting of rolled and towed bars and profiles made of steel, stainless steel, non-ferrous metals and plastics
Description:	Stand, table, cutting unit with the saw band and drive, clamping device, cooling system, el. switch board with control panel.
	Pneumatic *NO* ☒ *YES* ☐ Hydraulic *NO* ☐ *YES* ☒ Control system *NO* ☒ *YES* ☐
Technical data:	Cutting rate 20-120 m.min^{-1}
	Cutting angle -45°- bis-60°
	Total dimensions in mm (lxwxh) 1480x2000x1700
	Total power requirement 2,1 kW
	Weight 420 kg

Documentation:
Technical documentation for this machine device was elaborated in compliance with Government regulation no. 176/2008, Annex 7, part A.

The device meets relevant requirements of the given directives: **2006/42/EC**
2014/30/EU

The applied harmonized standards, National standards and technical specifications:

ČSN EN ISO 12100:2011	ČSN EN ISO 16093:2017	ČSN EN ISO 13857:2008
ČSN EN ISO 4413:2011		ČSN EN 60204-1 ed.2+A1:2009
ČSN EN 55011 ed.3+A1:2011	ČSN EN 61000-6-2 ed.3:2006	ČSN EN 61000-6-4 ed.2+A1:2011

The product is safe on condition of the common and determined usage.

The conformity judging was performed according to §12, par. 3, let. a), of the Law no. 22/1997 Coll. as amended.
The declaration of conformity was carried out in the cooperation with the [3)] TÜV SÜD Czech s.r.o, Novodvorská 994, 142 21 Prague 4 – Czech Republic, Identification number: 63987121 - Inspection body no. 4002.

The inspection certificate no **07.801.283** was issued

BOMAR, spol. s r.o.
Těžební 1236/1, 627 00 Brno
Czech Republic
IČO: 48908827
DIČ: CZ48908827

Brno,.12.1.2018

Point of issue, datum

Alfred Pichlmann, Managing Director

Name and function of the responsible subject, signature

1) Name, address and identification number of the subject issuing the conformity declaration (producer of importer)
2) Person authorized to complete the technical documentation
3) The authorized or accredited body co-operating on the conformity judging

!	If the equipment is installed without safety equipment offered by BOMAR, spol. s ro or its agents and used by the customer (or buyer) then EC declaration loses validity. EC Declaration of conformity is valid only if customer (buyer) installed the BOMAR safety equipment with the machine or with some other with equivalent safety device in accordance with current applicable regulations and standards. All machine elements and components that were built into the device by BOMAR, spol. s ro have been declared "identical" to a safety device, as offered by BOMAR, spol. s ro or its agents.

Content

1. BEZPEČNOSTNÍ POKYNY / SAFETY NOTES / SICHERHEITSHINWEISE 9

1.1. Machine determination 11
1.2. Protective clothing and personal safety 11
1.3. Safety notes for machine operator 12
1.4. Safety notes for the servicing and repairs 13
1.4.1. Safety notes for the servicing and repairs on hydraulic unit 13
1.5. Safety notes for the cooling 13
1.5.1. Instructions for first aid 14
1.6. Safety machine accessories 14
1.6.1. Total Stop 14
1.6.2. Arm cover 15
1.6.3. Saw band covers 16
1.6.4. Saw band stretching and rupture inspection 17
1.7. Umístění štítku stroje / Maschinenschild position / Position of the machine label 18
1.8. Umístění bezpečnostních značek / Verteilung der Sicherheitszeichen / Position of safety symbols 19

2. DOKUMENTACE STROJE / MACHINE DOCUMENTATION / DOKUMENTATION DER MASCHINE 21

2.1. Technická data / Technische Daten / Technical data 23
2.2. Rozměrové schéma / Aufstellzeichnung / Installation diagram 24
2.3. Popis / Beschreibung / Description 25
2.4. Transportation and stocking 26
2.4.1. Conditions for transportation and stocking 26
2.4.2. Transport and stocking preparations 26
2.4.3. Transport and stocking 26
2.4.4. Transportní schéma / Transport schéma / Transport schneme 27
2.5. Activation 28
2.5.1. Machine working conditions 28
2.5.2. Band saw unpacking and assembling 28
2.5.3. Installation of the length stop for the material length setting 28
2.5.4. Attachment of the cooling liquid tub 30
2.5.5. Assembly of the hand wheel 30
2.5.6. Machine installing and leveling 31
2.5.7. Putting into operation of the hydraulic unit 31
2.5.8. Filling the reservoir with hydraulic oil 32
2.5.9. Kotevní plan / Verankerungsplan / Grounding plan 33
2.5.10. Electrical connection 34
2.5.11. Check the direction of the saw band 34
2.5.12. Inspection of the connection to the electrical network 35
2.5.13. Filling of the cooling system 35
2.5.14. Machine functions check 35
2.6. Machine disposal after lifetime 35
2.7. Saw band 36
2.7.1. Saw band size 36
2.7.2. Selection of the saw band tooth system 36
2.7.3. Saw band running-in 36

3. OVLÁDÁNÍ STROJE / MACHINE CONTROL / BEDIENUNG DER MASCHINE 39

3.1. Starting the band saw and switching on the safety circuits 41
3.2. Control elements 42
3.3. Machine control 44
3.3.1. Semiautomatic cycle 44
3.3.2. Setting of the material length 46
3.3.3. Setting of the cutting angle 47
3.3.4. Setting of the optimal span of the guiding cubes 50
3.3.5. Cutting speed adjustment 50
3.3.6. Speed adjustment of the arm lowering 50
3.3.7. Setting the type of cooling 51
3.3.8. Pressure adjusting to the cut 51
3.3.9. Laserliner – optional accessory 53
3.3.10. Device for regulation of clamping pressure (optional accessory) 54
3.4. Material insertion 56
3.4.1. Selecting means of manipulation 56
3.4.2. Insertion 56
3.4.3. Bundle material cutting 56

4. ÚDRŽBA STROJE / MACHINE MAINTENANCE / WARTUNG....57

4.1. Saw band dismantling....59
4.2. Saw band installation....61
4.3. Saw band stretching and inspection....64
4.3.1. Saw band stretching....65
4.3.2. Saw band inspection....65
4.4. Adjustment....66
4.4.1. Saw band run adjustment....66
4.4.2. Hard metal guides adjustment on the machine....66
4.4.3. Guide cube adjustment....67
4.4.4. Brush adjustment....68
4.4.5. Adjusting the limit switch of the saw band stretching....69
4.4.6. Saw frame lower position stop adjustment....70
4.4.7. Adjustment of the limit switch of saw frame lower stop....71
4.4.8. Adjustment of a throttle valve....72
4.5. Cooling agents and chip disposal....73
4.5.1. Coolant inspection....73
4.5.2. Cooling liquid preparation....74
4.5.3. Chips disposal....74
4.6. Gearbox oils and greases....75
4.6.1. Gearbox oils....75
4.6.2. Lubrication greases....76
4.6.3. Lubrication....76
4.6.4. Hydraulic oils....77
4.6.5. Hydraulic unit service....78
4.7. Machine cleaning....79
4.8. Adjustment of the regulating pressure to the cut....80
4.9. Worn pieces replacement....81
4.9.1. Hard metal guides replacement....81
4.9.2. Saw band guiding rollers replacement....82
4.9.3. Worn brush replacement....83
4.9.4. Stretching wheel replacement....84
4.9.5. Driving wheel replacement....86
4.9.6. Cooling pump replacement....87

5. ZÁVADY / TROUBLESHOOTING / STÖRUNGEN....89

5.1. Mechanical problems....91
5.2. Electric problems....94
5.3. Hydraulic problems....96

6. SCHÉMATA / SCHEMAS / SCHEMATICS 99

6.1. Elektrická schémata / Elektroschemas / Wiring diagrams....101
6.2. Hydraulické schéma / Hydraulisches Schéma / Hydraulic diagram....122

7. VÝKRESY SESTAV PRO OBJEDNÁNÍ NÁHRADNÍCH DÍLŮ / ZEICHNUNGEN FÜR BESTELLUNG DER ERSATZTEILE / DRAWING ASSEMBLIES FOR SPARE PARTS ORDER.... 125

7.1. Ergonomic 320.258 DGH....126
7.2. Kusovník / Piece list / Stückliste - Ergonomic 320.258 DGH....127
7.3. Ergonomic 320.258 DGH....128
7.4. Kusovník / Piece list / Stückliste - Ergonomic 320.258 DGH....129
7.5. Chlazení / Cooling / Kühlung....130
7.6. Kusovník / Piece list / Stückliste - Chlazení / Cooling / Kühlung....131
7.7. Odměřování/ Measuring/ Gehrungsmessung....132
7.8. Kusovník / Piece list / Stückliste - Odměřování/ Measuring/ Gehrungsmessung....133
7.9. Vana/ Tank/ Wanne....134
7.10. Podstavec/ Base/ Untersatz....136
7.11. Kusovník / Piece list / Stückliste – Podstavec/ Base/ Untersatz....137
7.12. Konzola otočná/ Turnable consol/ Drehkonsole....138
7.13. Kusovník / Piece list / Stückliste – Konzola otočná/ Turnable consol/ Drehkonsole....139
7.14. Kartáč/ Brush/ Bürste....141
7.15. Rozvaděč elektro / Electro distributor / Schaltschrank....142
7.16. Ovládací panel / Control panel / Bedienpult....144
7.17. Kusovník / Piece list / Stückliste Ovládací panel / Control panel / Bedienpult....145
7.18. Rameno/ Saw arm/ Sägerahmen....146
7.19. Kusovník / Piece list / Stückliste – Rameno/ Saw arm/ Sägerahmen....147
7.20. Rameno/ Saw arm/ Sägerahmen....148
7.21. Kusovník / Piece list / Stückliste – Rameno/ Saw arm/ Sägerahmen....149
7.22. Pohon/ Drive/ Antrieb....150

7.23. Pohon/ Drive/ Antrieb....151
7.24. Vedení pásu/ Belt guide/ Sägebandführung....152
7.25. Kusovník / Piece list / Stückliste – 153
Vedení pásu/ Belt guide/ Sägebandführung....153
7.26. Kostka vodící/ Lead cube/ Führungsklotz....154
7.27. Kusovník / Piece list / Stückliste – 155
Kostka vodící/ Lead cube/ Führungsklotz....155
7.28. Kostka vodící/ Lead cube/ Führungsklotz....156
7.29. Kusovník / Piece list / Stückliste – 157
Kostka vodící/ Lead cube/ Führungsklotz....157
7.30. Napínání/ Tensioning/ Spannung....158
7.31. Kusovník / Piece list / Stückliste – 159
Napínání/ Tensioning/ Spannung....159
7.32. Válec zvedací/ Lifting cylinder/ Hebezylinder....160
7.33. Kusovník / Piece list / Stückliste – 161
Válec zvedací/ Lifting cylinder/ Hebezylinder....161
7.34. Doraz/ Stop piece/ Anschlag....163
7.35. Stůl/ Table/ Tisch....164
7.36. Kusovník / Piece list / Stückliste – 165
Stůl/ Table/ Tisch....165
7.37. Svěrák/ Vice/ Schraubstock....166
7.38. Kusovník / Piece list / Stückliste – 167
Svěrák/ Vice/ Schraubstock....167
7.39. Válec/ Roller/ Zylinder....168
7.40. Kusovník / Piece list / Stückliste – 169
Válec/ Roller/ Zylinder....169
7.41. Doraz/ Stop piece/ Anschlag....170

8. VOLITELNÉ PŘÍSLUŠENSTVÍ / OPTIONALE ZUBEHÖR / OPTIONAL ACCESSORIES 171

8.1. Odměřování / Measuring / Gehrungsmessung....172
8.2. Odměřování / Measuring / Gehrungsmessung....174
8.3. Kusovník / Piece list / Stückliste – Odměřování / Measuring / Gehrungsmessung....175
8.4. Ovládací panel / Control panel / Bedienpult....176
8.5. Kusovník / Piece list / Stückliste – Ovládací panel / Control panel / Bedienpult....177

1. Bezpečnostní pokyny / Safety notes / Sicherheitshinweise

The operating instructions must be read by any person, who gets in touch with the machine during transportation, installation, using, servicing, reparation, stocking or removal!

The operating instructions include relevant information. The operator must familiarize himself with the installation and operation, safety notes and machine servicing, to reach maximum reliability and lifespan. The operating instructions serve to avoid risks, which are linked with work on the machine. Before transporting and using the machine, please read the instructions thoroughly!

Attention!
The operating instructions must be available at the machine position! Keep the operating instructions in a good condition!

1.1. Machine determination

The band saw **Ergonomic 320.258 DGH** is determined for cutting and shortening of rolled bars and drawn bars as well as profiles from steels, stainless steels, non-ferrous metals and plastics **with cutting angles -45° to 60°.**

Combustible materials are excluded from cutting! Any other usage and operation outside this range are unauthorized and the manufacturer/supplier does not accept any responsibility for any damages resulting from such misuse. **The operator has full responsibility!**

The machine is equipped with safety and protective measures for both the operator and the machine to be protected. Nevertheless, these measures cannot prevent all injuries. All personnel must read this chapter and understand it, before they start to work on the machine. **Always follow the instructions about work safety!** The personnel must take into account other aspects of the risk, which include the conditions of the working place and the material.

1.2. Protective clothing and personal safety

Wear fitting clothes! Loosely fitting clothes may be caught in the moving machine parts and cause serious injuries.

Attention!
Gloves can be worn only when manipulating with the material or replacing parts! The machine and its accessories must be inactive!
If the machine is running, you must not wear gloves! There is a higher risk of getting caught in the moving machinery!

Wear protective gloves! Material cuts and saw band have sharp edges and may cause injuries.

Wear protective shoes with non-skid soles! Unsuitable shoes may cause balance loss and following injury. Falling pieces may cause serious injuries too.

Wear protective goggles! Chips and cooling liquid may damage your eyes.

Always wear ear protection! Most of the machines emit up to 80 dB and may damage your hearing.

Do not wear jewellery and always tie back long hair! Moving machine parts can catch jewellery or loose hair and may cause serious injuries.

Operate the machine only when you are fit enough to work. Illnesses or injuries diminish concentration. **Avoid machine work, which may compromise the safety of you and your colleagues!**

> ***Attention!***
> *Mind the safety signs on the machine. Do not remove or damage them!*

1.3. Safety notes for machine operator

> ***Attention!***
> *Machine can only be operated by a person older than 18 years!*
> *Machine can be operated only by a person physically and mentally fit for this activity.*

Machine can only be operated only by one person at a time. Machine operator is responsible for other people present near the machine.

The person who is operating the machine using the control elements (control panel and other) must not either alone or with help of other workers move the cut or otherwise machined material at the same time.

> ***Follow the instructions and directives for work safety!***
> *Read the operating instructions before you start to work on the machine! Keep the operating instructions in good condition!*

Close covers before starting the machine and check, if the covers are not damaged. Damaged covers must be repaired or replaced immediately. Do not start the machine, if any cover is removed!

> ***Attention!***
> ***Do not connect the machine to electricity if the door or any covers are removed. Do not touch the high voltage electrical equipment (transformers, motors, terminals or wiring).***

- Check, if the electric cables are not damaged.
- Do not hold or manipulate the material during clamping or cutting!
- Do not operate the buttons and switches on the control panel wearing gloves! You may press a wrong button.
- Make sure, that there is nobody in the working area of the machine (the working area of the vice, the saw band, the saw arm etc.) during a working cycle and when starting the machine.
- Under no circumstances touch any rotating elements.
- Use the machine only when it is in a good condition!
- Check at least once in a shift, if the machine is not visibly damaged. If you discover any such damage, you must bring the machine to a halt and inform your superior!
- Keep your working area and machine clean and uncluttered! Ensure sufficient lighting in the working area.
- Take off any spilt water or oil from the floor and dry it immediately to avoid a possibility of injury.
- Do not touch the cooling liquid with bare hands!
- Do not adjust the cooling liquid nozzle if the machine is running.
- Do not remove the chips from the working area of the machine, when the machine is running!

- Do not use compressed air for machine cleaning or for chip removal!
- Use protective gear for chip removal!!

1.4. Safety notes for the servicing and repairs

Switch off the main switch and lock it, before you start service work! If you have the Practix type of machine, disconnect it from electrical network. This way you eliminate a possibility of starting the machine accidentally.

Take care when manipulating the frequency converter. It is still energized for 20 minutes after machine shutdown.

Always adhere to the safety instructions!

Only an authorized professional can carry out the servicing and repairs.

For parts replacement, use only those, which are identical with the originals. Otherwise, there is possibility of health hazard.

Use only recommended types of hydraulic oils, oils and lubricants!

Do not remove or lock the limit switches or any other safety equipment!

Attention!
Only a qualified professional can carry out the servicing and repairs of the electrical equipment! Take special care during the work with electrical equipment. High voltage shock can have fatal consequences! Always follow the work safety instructions! Otherwise, there is possibility of heavy injury!

Any use of the saw, accessories or machine parts other than that intended by BOMAR, spol. s r.o. company is not permitted. The guarantee on this product will be lost afterward and BOMAR, spol. s r.o. takes no responsibility for damage caused.

Do not turn the machine on if all covers are not in place.

.

1.4.1. Safety notes for the servicing and repairs on hydraulic unit

Compliance with the principles of cleanness is a basic requirement for trouble-free operation of hydraulic equipment. Hydraulic components are products made with high precision, and any contamination leads to a reduction of lifetime and even malfunction. The consequences are very difficult and expensive to remove.

Always use clean tools. Never put parts and fasteners which are a part of the hydraulic circuit on a dirty surface. The best cleaning agent is crepe paper. The fibers of the cleaning cloths can also cause malfunction.

Remove the protective caps from the threaded chamber just before the assembly of the unit.

Flush hoses and pipes before mounting with gasoline or other cleaning agent and blow compressed air through them.

All fittings must be properly tightened. However, do not use brute strength.

1.5. Safety notes for the cooling

Attention!
- *When handling the coolant always keep to the work safety directives and instructions of the manufacturer.*
- *When handling cooling agents always wear safety fluid-proof gloves!*
- *Wear protective goggles!*
- *Cooling liquid can get in contact with your eyes and may cause permanent severe injuries*

1.5.1. Instructions for first aid

1. Pull off and safely remove polluted, soaked clothing.
2. If inhaled, go out on fresh air or look for first aid treatment.
3. Wash with water and eventually treat with crème any points of contact with the skin.
4. Flush your eyes with water and seek out a doctor.
5. If swallowed, drink a lot of water and induce vomiting. Look for medical help

1.6. Safety machine accessories

The machine is equipped with safety accessories. They protect the operator from injuries and the machine from damage. The safety accessories are blocking accessories, emergency switches and covers. Check the function of the safety accessories once a week. If the safety accessories are not fulfilling their function, stop your work and repair or change the safety accessories.

Enhanced risk!
Do not come into or intervene in the cutting area. Otherwise, there is a possibility of heavy injury.

1.6.1. Total Stop

TOTAL STOP button is used for emergency switching – off of the machine in a case of defect or health hazard. By pressing **TOTAL STOP** will immediately stop all dangerous machine movements..

If any damages or fault appear, immediately press the TOTAL STOP button!

Release of the pressed button is possible by turning the upper part of the button.

1.6.2. Arm cover

If the cover is opened during operation, the limit switch is opened and the band saw is stopped. The machine cannot be run with the arm open even in the service mode.

Make sure the arm cover is closed before starting the machine!

1.6.3. Saw band covers

These three covers cover the band of the saw

- from the moveable guiding cube to the arm

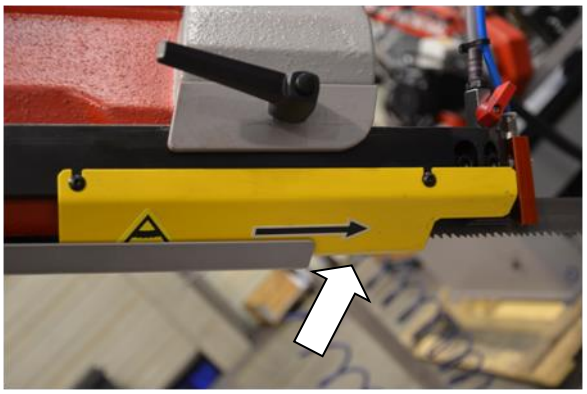

- from the jaw of the vice to the arm (both sides)

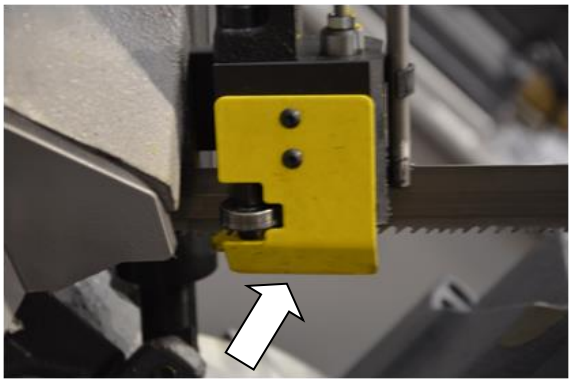

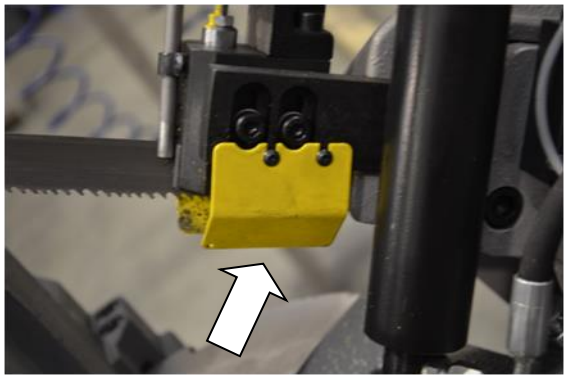

-

Never turn the band drive on, if these covers are not mounted

1.6.4. Saw band stretching and rupture inspection

This device checks the saw band stretching and causes an immediate machine shut – down in case the band ruptures.

The device contains a limit switch. Its setting is described in the chapter Machine maintenance. Check the stretching carefully and periodically and adjust it eventually.

1.7. Umístění štítku stroje / Maschinenschild position / Position of the machine label

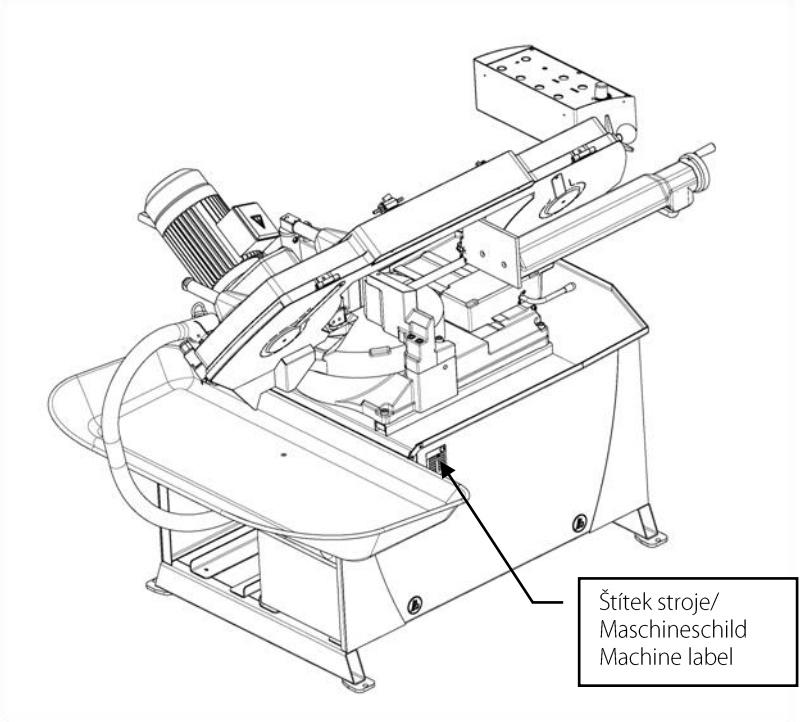

1.8. Umístění bezpečnostních značek / Verteilung der Sicherheitszeichen / Position of safety symbols

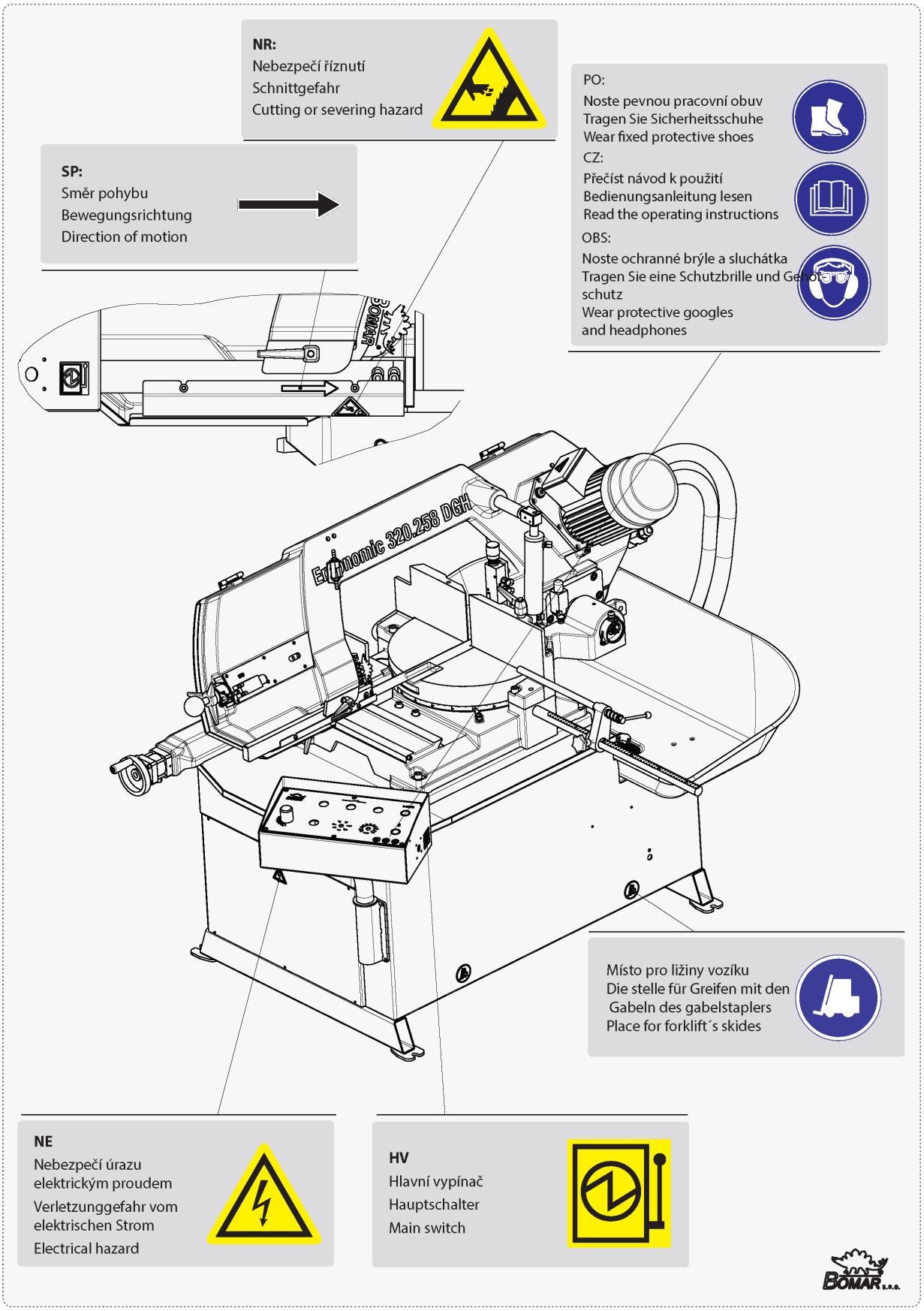

2. Dokumentace stroje / Machine documentation / Dokumentation der Maschine

2.1. Technická data / Technische Daten / Technical data

Hmotnost stroje / Maschinengewicht / Machine weight:	
• Hmotnost / Gewicht / Weight	420 kg
Rozměry stroje / Maschinengröße / Machine size :	
• Délka / Länge / Lenght	1480 mm
• Šířka / Breite / Width	2000 mm
• Výška / Höhe / Height	1700 mm
Elektrické vybavení / Elektrische Ausrüstung / Electical equipment:	
• Napájení / Versorgungsspannun / Supply voltage	~ 3×2308/400V, 50Hz / 60 Hz
• Příkon / Gesamptschlusswert / Total Input	2,1 kW
• Max.jištění / Max. Vorschaltsicherung / Max. Fuse	16 A
• Krytí / Schutzart / Protection	IP 54
Akustický tlak / Schalldruckpegel / Acoustic pressure:	
• Ergonomic 320.258 DGH	L_{Aeqv}=65 dB* (50Hz) L_{Aeqv}=80 dB* (60Hz)
Pohon / Atrieb / Drive:	
• Typ / Typ / Type	4P, 3x230/400V, B14-C140, Size 90 (TM2 90 4L)
• Výkon / Leistung / Output	1,5 kW
• Jmenovité otáčky / Motornenndrehzahl / Nominal speed	1390 min-1
Chladící zařízení / Kühlmiteleinrichtung / Cooling equipment:	
• Výkon / Leistung / Output	0,05 kW
• Obsah nádrže / Volumen vom Kühlmittel / Capacity	12 dm^3
Rozměr pásu / Sägebanddimension / Band size:	
2910×27(25)×0,90 mm	
Řezná rychlost / Schnittgeschwindigkeit / Cutting speed:	
20–120 m/min	

Řezné rozsahy / Schnittbereiche / Cutting size:

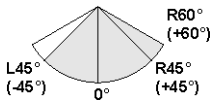

0°	Ø258 mm	320 x 100 mm	275 x 250 mm	250 x 250 mm
R 45°	Ø210 mm	210 x 100 mm	185 x 245 mm	195x195 mm
L 45°	Ø185 mm	195 x 100 mm	150 x 250 mm	170 x 170 mm
R 60°	Ø135 mm	135 x 100 mm	135 x 110 mm	110 x 110 mm

***Level of acoustic pressure:**

Equivalent level of acoustic pressure A (noise) at operator position are L_{Aeqv}= 65 dB (50Hz) or L_{Aeqv}= 80 dB (60Hz).. Mentioned values are levels of emission which doesn't have to represent safe levels. Factors which influence real level of acoustic pressure on machine operator are: working place characteristics, cut material, saw band. These factors have significantly influence on acoustic pressure.

2.2. Rozměrové schéma / Aufstellzeichnung / Installation diagram

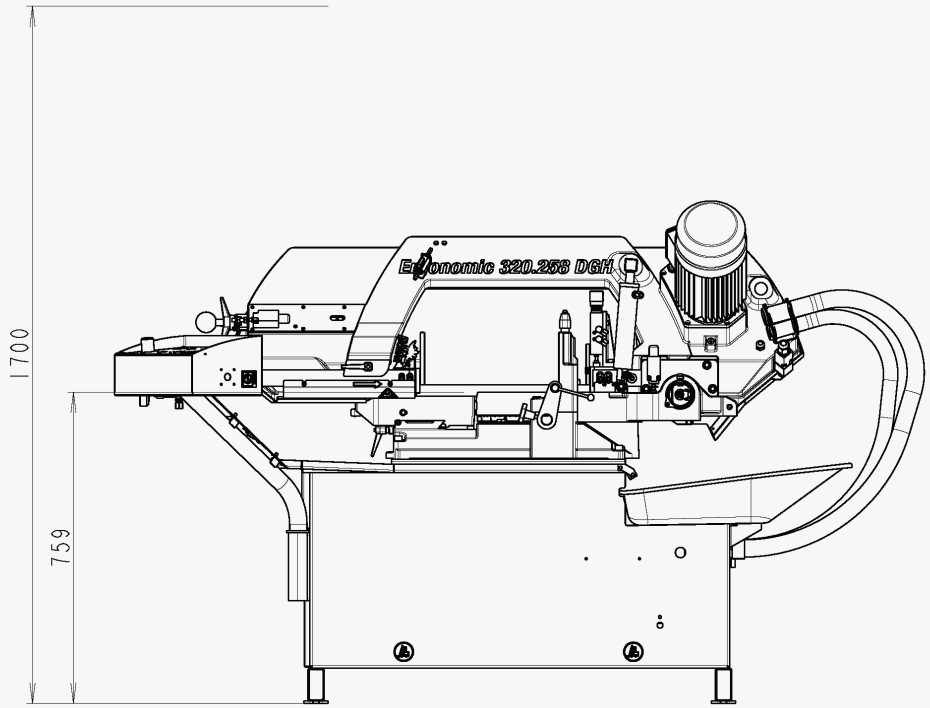

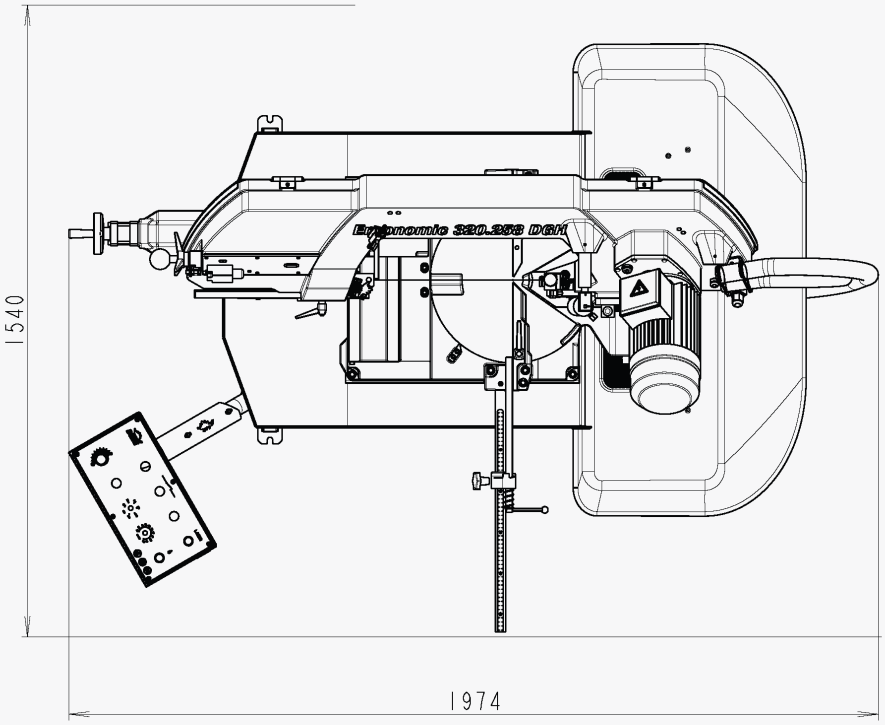

2.3. Popis / Beschreibung / Description

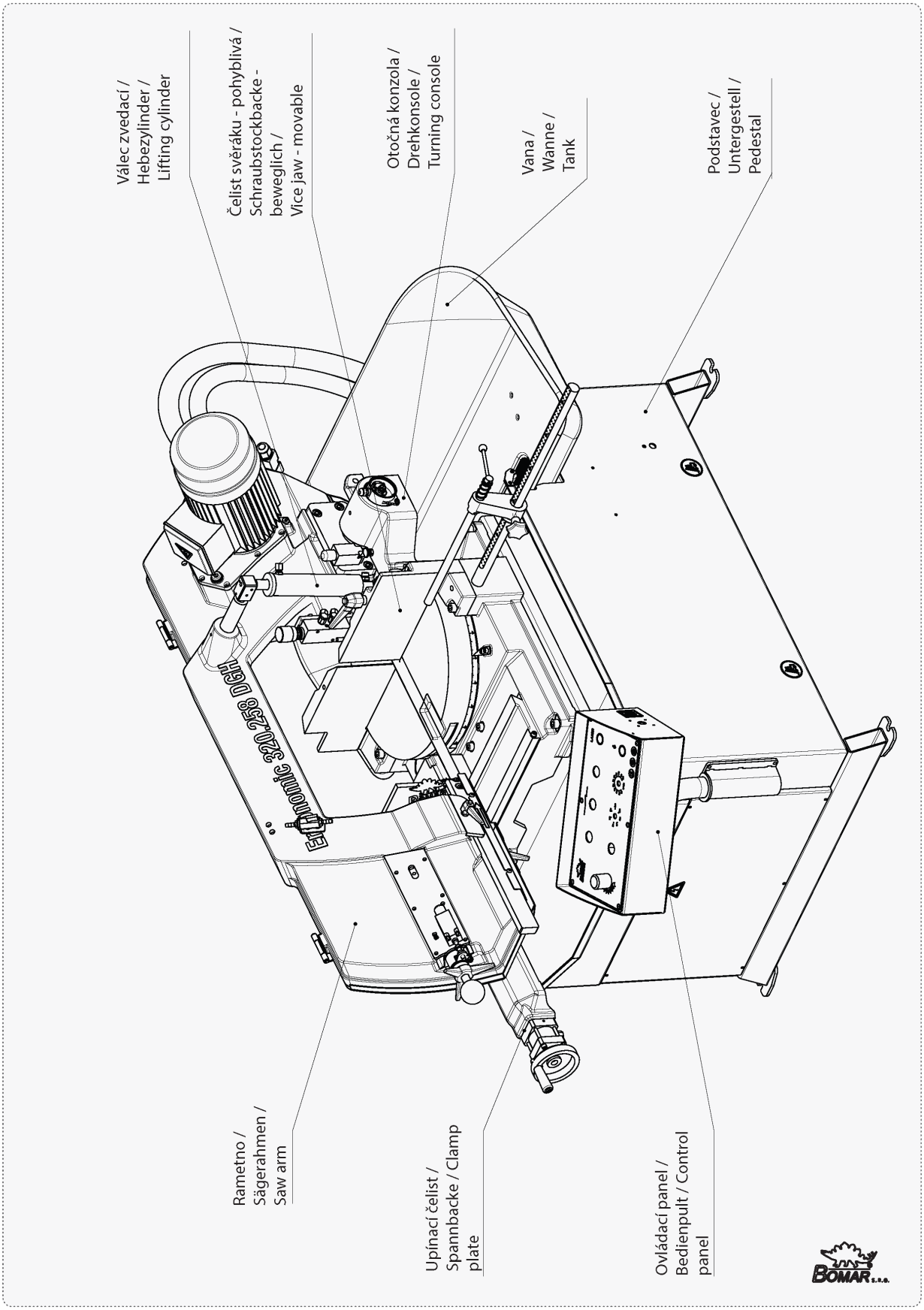

2.4. Transportation and stocking

2.4.1. Conditions for transportation and stocking

Follow the recommendations of the manufacturer for transportation and stocking! If the recommendations are not kept, damage may occur to the machine.

- Don't use a forklift truck for handling the machine, if you do not have a license for it!
- Don't move under suspended loads! Fault in the lifting device may cause serious injury.
- Keep a safe distance from the machine during transport.
- Temperature of the air must be between **-25°C and 55°C**, for a *short period* (max. 24 hours) up to *70*°C.
- Do not expose the machine to radiation (microwave radiation, ultraviolet radiation, laser radiation, x-ray radiation). Radiation can cause problems with the machine function and deteriorating of the condition of the insulation.
- Take measures, to prevent damage by dampness, by vibrations and by shakes.

2.4.2. Transport and stocking preparations

Close the vice and thoroughly oil all smooth surfaces.

Lower the saw frame to the lowest position.

Make sure to empty the machine of all traces of the cooling agent.

Fasten all loose parts securely to the machine.

Pack and wrap the control desk securely to avoid damage during transport.

Put the stickers stating the minimum approximate machine weight to at least five well visible places.

The machine has to be screwed to a pallet for the transportation. Make sure the pallet is strong enough to be able to hold the saw!

2.4.3. Transport and stocking

The machine must be secured during transportation. Screw the pallet to the floor of the vehicle. Be careful that the machine is not damaged during transportation.. It is forbidden to handle the machine in any way different from that written in these operating instructions, the machine can be damaged.

Store the machine only under conditions mentioned in the manual, to avoid damage of the machine

2.4.4. Transportní schéma / Transport schéma / Transport schneme

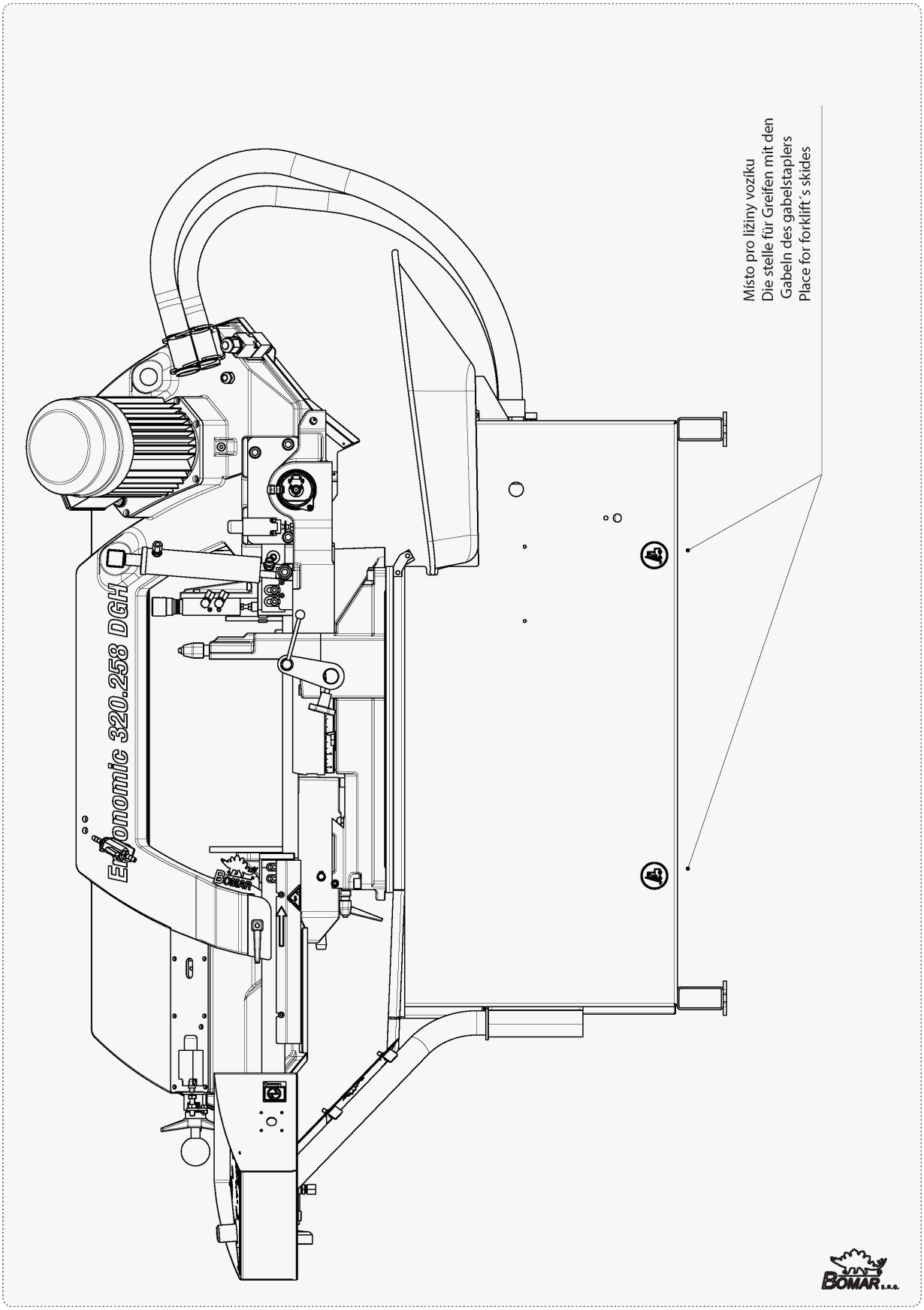

2.5. Activation

2.5.1. Machine working conditions

Keep the conditions of the manufacturer for machine operation! If the recommendations are not kept, damage can occur to the machine.

The manufacturer warrants the correct function of the machine for these conditions:

- At air temperature from ***10°C to 40°C***; the temperature average during 24 hours must ***not exceed over 35°C***.
- At relative dampness of the air in the interval from 30% to 95% (not condensing). Altitude up to 1000 meters.
- Do not expose the machine to any radiation (microwave radiation, ultra-violet radiation, laser radiation, x-ray radiation). Radiation can cause problems with the machine function and deteriorate the condition of the insulation.

2.5.2. Band saw unpacking and assembling

Remove the wrapping from the machine and unpack all parts.

Attention!
Switch off the main switch and lock it in position, before you start the assembly! Otherwise, there is a possibility of an accidental machine start.

Now put all enclosed parts to place.

2.5.3. Installation of the length stop for the material length setting

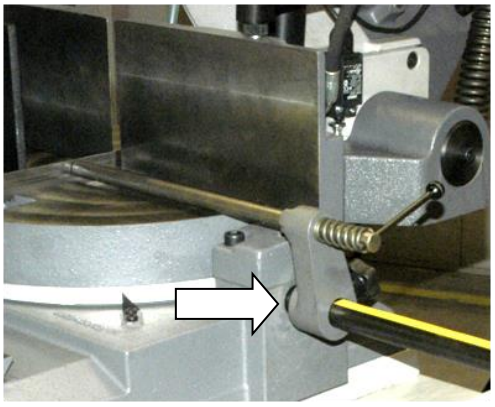

1. Slide the length stop into the hole on the side of the vice.

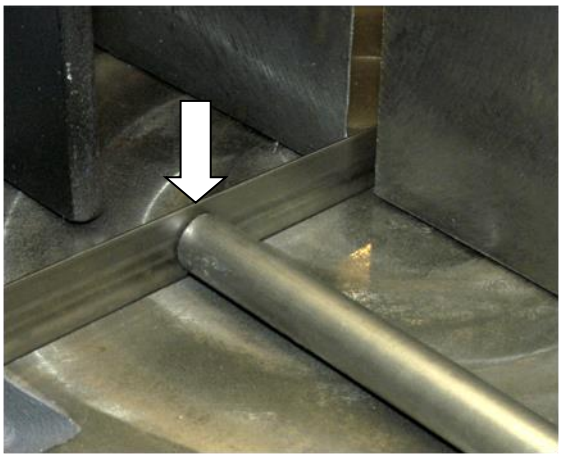

2. Move the length stop up to the saw band.

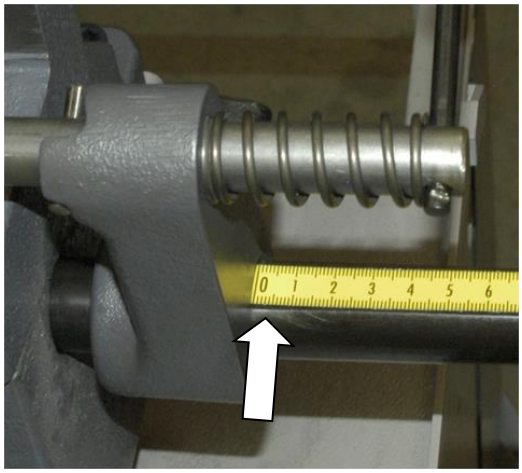

3. Set the measuring unit to zero value.

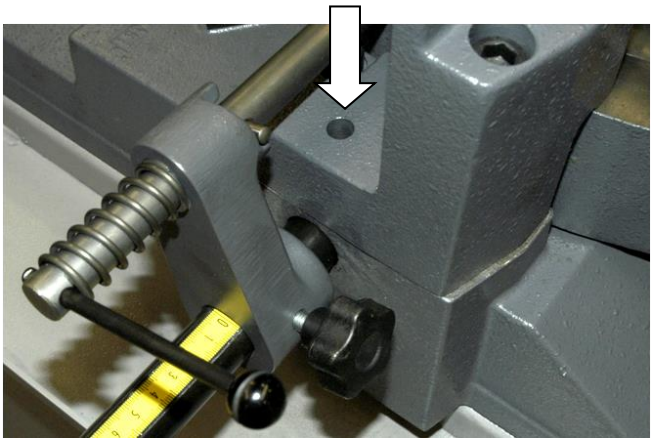

4. Fix the guiding pole of the length stop in place with a screw, which is put into the opening on the top side of the vice.

2.5.4. Attachment of the cooling liquid tub

1. Put the tub for the dripping off of the coolant on the pedestal from the back side of the saw

2. Attach the hose for the coolant removal to the outlet of the tub and put its other and immerse its other end into the coolant tank.

2.5.5. Assembly of the hand wheel

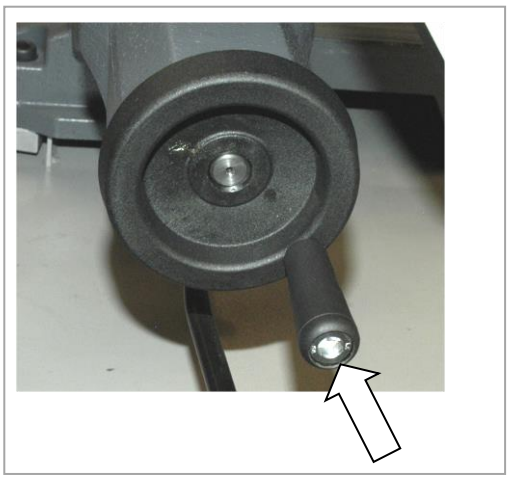

Remove the nut from the handle of the hand wheel, place it into the hex opening on the back side of the wheel and fasten the handle.

2.5.6. Machine installing and leveling

Check the floor supporting capacity before installing the machine. If the floor capacity does not meet the requirements, you must ready the necessary base for the machine.

Minimal requirement:

machine weight – Ergonomic 320.258 DGH – 420 kg

+ weight of the accessories

+ maximum weight of material

- The machine must be leveled in a horizontal position. All feet of the machine must touch the floor after leveling.
- The machine must be leveled by means of a calibrated spirit level. Put the spirit level near the vice. Adjust the roller conveyors according to the spirit level.
- For machine leveling, take care that there is sufficient space available for operation, repair work, servicing of the machine and handling of the material.
- The machine and all appended parts and accessories must be visible from the place of operation.

2.5.7. Putting into operation of the hydraulic unit

Before the first run check:

- the tank is filled with the prescribed oil to upper limit
- pump is not running in the opposite direction. Hydraulic generator must not be operated in opposite directions of rotation for longer than 5-10 seconds.
- connections are properly tightened, pipes assembled without internal stress
- wiring matches with electrical and hydraulic diagrams
- the electric motors (pump and cooler) are properly connected and have the prescribed rotation
- the hydraulic accumulator with nitrogen gas to the specified value
- aux. elements work right (thermometer, level gauge, heater)

First run (Attention – working pressure on securing valve is set by producer in accoring the hydraulic diagram):

- In the short intervals activate an electric pump
- check for leaks and noise
- Bleed the hydraulic circuit
- if possible, test the circuit function with minimum load
- test the electrical equipment
- during operation monitor measuring equipment, noise, height and temperature of oil in the tank
- During this time a careful bleeding off for the whole hydraulic system is necessary. In case there is no bleeder port, the power pack will bleed itself after a while via the air breather on the tank or the return line filter.
- Upon the first start-up, the devices and distribution system are filled up with oil, and therefore the oil level in the tank drops. If the level drops below the minimum value, you must refill the oil after switching off the device.

After multiple start-up, the hydraulic unit is ready for operation.

2.5.8. Filling the reservoir with hydraulic oil

Oil regulations and recommendations of the manufacturer in the technical documentation (appendix) are to be carefully observed. For standard power packs we recommend the oiltype OH-HM32 (DIN 51524) of all known oil manufacturers.

Power packs have to be filled up with clean, pre-filtered oil! The purity of the hydraulic fluid must correspond to the class 10 NAS 1638 (reachable with filter ß =75)!

Filling from container, such as barrels, backets, etc. is not recommended or permitted!

The maximum oil level will be shown on the upper marking at the dipstick or the sight level glass. Overfilling has to be prevent. The maximum filling rate of 15 l/min shouldn´t be exceed..

Oil type	Kinematic viscosity v in mm^2/s in relationship to the fluid temperatur					Freezing point
	0°C	20°C	40°C	60°C	80°C	°C
OH-HM 32	220	100	32	15	7	-40
OH-HV 32	180	67	32	17	11	-40

2.5.9. Kotevní plan / Verankerungsplan / Grounding plan

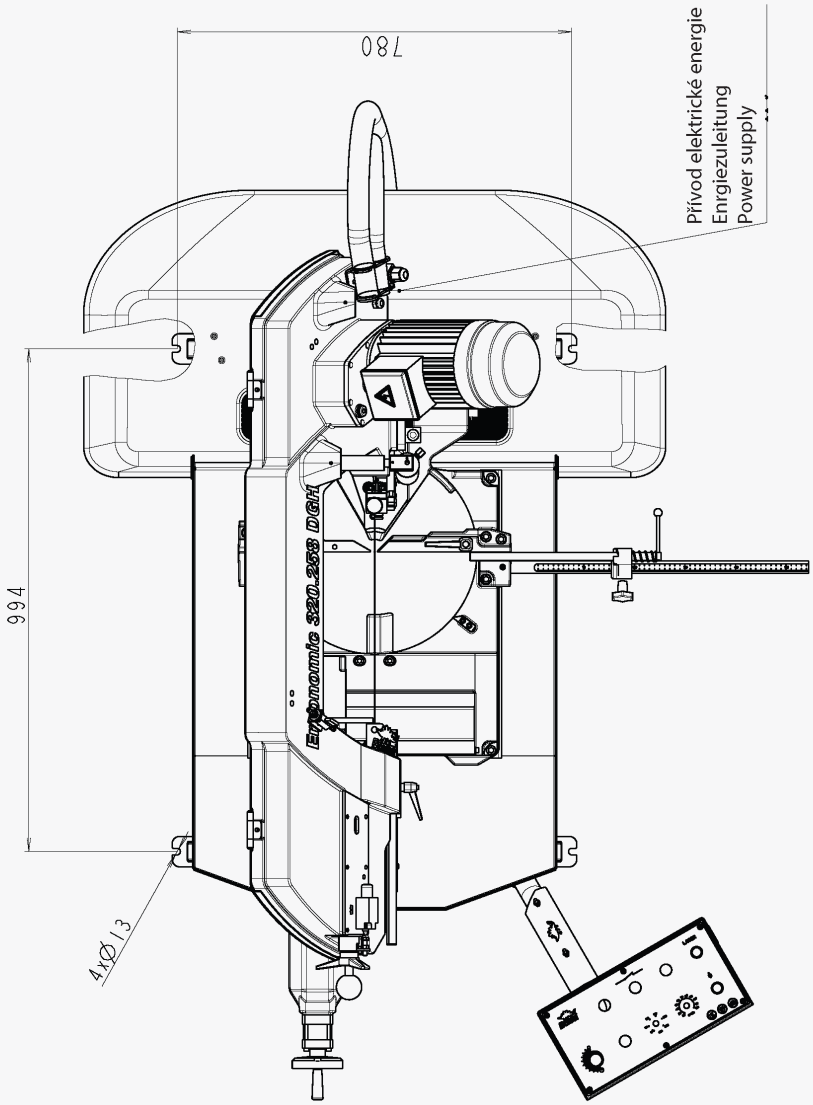

Kotvící materiál / Verankerungsmaterial / Grouding material

- 4× Chemické hmoždiny / Chemische dübel / Chemical plug – ø12 mm
- Vrtáno do hloubky / In die Tiefe gebohrt / Drilled to – 100 mm
- 4x Šrouby / Schraube / Screws – M10

Šrouby podložit deskami o min. rozměrech P10×100-100
- Die Schrauben mit Platten mit Minimaldimensionen P10×100-100 unterlegen
Screew must be bottomed with plates (min. dimensions P10×100-100)

Požadavky na rovinnost podlahy / Anforderungen an die Bodenebenheit / Requirements for floor flatness

± 10 mm / 1 m

Požadovaná únosnost podlahy/ Die erforderliche Tragfähigkeit des Bodens/ Required loading capacity of the floor

600 kg / m2

2.5.10. Electrical connection

Attention!
Only a qualified professional must carry out the servicing and repairs of the electric equipment! *Take special care during work with the electrical equipment. High voltage accident can have fatal consequences! Always follow instructions for work safety.*

Electrical parameters of the machine:

- Service voltage: ~ 3×230/400V, 50Hz / 60 Hz TN-C-S
- Total input 2,1 kW
- Max. fuse: 16 A

Before connecting the machine turn off the main power switch and ensure a dry area for the connection work.

Note:
The values of the cross section of the conductor and the rated current can be found in the regulations.

Service voltage must agree with the line voltage! Cross section of the supply line must respond with the rated current for max. machine load.

Note:
The socket with the fork can be used only for machines with the rated current less than 16 A and total input less than 3 kVA.

The input line is equipped with a 16 A socket for connection of the machine to the electric supply line. In case the machine is connected with a direct connection, an extra main switch which can be locked in zero position must be added.

Attention!
In this case the extra switch becomes the primary switch and the main switch on the machine has only secondary function!

2.5.11. Check the direction of the saw band

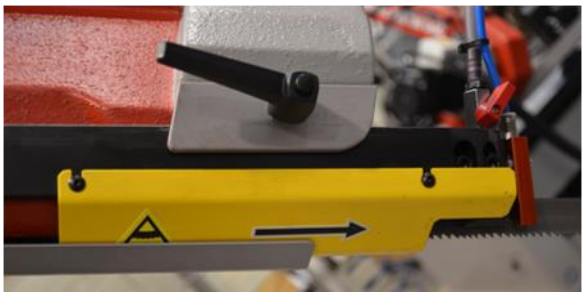

After the machine has been successfully connected, switch on the machine and run the driving engine of the band briefly. The movement of the band must be in agreement with the direction of the arrow on the saw band cover. If the direction of the saw band does not agree, the phases at the terminal line must be switched.

2.5.12. Inspection of the connection to the electrical network

Attention!
When you connect the machine to the electrical network insure correct connection of all phases!
THE HYDRAULIC AGGREGATE ENGINE MUST NOT BE OPERATED IN REVERSED MODE FOR MORE THEN 10 SECONDS!!!

2.5.13. Filling of the cooling system

Prepare a mixture of the water and the cooling liquid. Keep to the concentration specified by manufacturer. Remove the cover from the drainage hole. Pour the mixture into the tank of the cooling system.

When filling the tank with the cooling liquid, take care that the liquid does not drip out of the tank and that the tank does not overflow.

When adding anticorrosion agents, antifreeze and other chemicals follow the instructions of the manufacturer! By mixing various products poisonous and aggressive chemicals can be created that can damage your health or the cooling equipment of the machine.

2.5.14. Machine functions check

Before you start the check study the chapter *Machine control* thoroughly. Do not proceed with the check if you did not fully understand all control elements and machine functions.

Check, if the machine or some parts of the machine were not damaged during transport.

Check, if all covers are installed and functional. Check (with the Tenzomat) if the saw band is correctly stretched. If it is necessary, you can stretch the saw band according to chapter *Selection and replacement of the saw band*. Correct values of the saw band tension are on the Tenzomat.

Switch on the main switch and check the motors and systems (saw band drive, hydraulic pump, cooling pump, chips conveyor).

Open and close the main vice. Turn the saw frame of the band saw from one outer position to the other outer position. Raise the saw frame to the top position and than lower the saw frame to the lowest position.

Start the machine with the cooling pump and let it run without load until the cooling system will be filled with cooling liquid. As soon as the cooling liquid starts to escape from the nozzles of the cooling system, the cooling system is ready for operation. Carry one cycle of cutting without material. Check, if the machine runs with no irregularities. If all machine functions are run properly, the machine is ready for operation.

2.6. Machine disposal after lifetime

Blown out all service fluids (cooling liquid, hydraulic oil) into designated reservoir. Dismantle machine into separate parts and dispose them in accordance with valid directives.

2.7. Saw band

Remove the saw band cover only after you have installed and tightened the saw band a bit. This way you minimize the risk of injury.

2.7.1. Saw band size

2910×27(25)×0,90 mm

2.7.2. Selection of the saw band tooth system

The manufacturers provide the saw bands with constant and variable tooth systems. The important factor for selection of the tooth system is the length of the cutting canal with respect to the size of the product.

5. *Constant tooth system* – the saw band has a constant tooth pitch all over its length. This type is suitable for cutting solid materials.

BOMAR recommends variable tooth system for its band saws.

6. *Variable tooth system* – tooth pitch is variable. Variable tooth system is used for profiled materials and bundle cutting. Variable tooth pitch lowers vibration of the saw band, increases service life of the saw band and quality of the cut area.

In the table below the type of the tooth system depending on the sizes and profile of the cutting material is advised.

Footnotes:

Z_pZ – teeth number on one inch S – tooth with zero angle of the teeth K – tooth with positive angle of the teeth

Examples of the tooth system marking:

32 S – number „32" means 32 teeth per inch (constant tooth system),
letter „S" marks teeth with zero angle with respect to the band.

4–6 K – number „4–6" means 4 to 6 teeth per inch (variable tooth system);
letter „K" marks teeth with positive angle with respect to the band.

2.7.3. Saw band running-in

For reaching a full lifespan of the band we recommend performing a running-in.

Running-in: Perform a cut with the frame lowering speed at 50%. If vibrations occur increase or decrease the band's speed.

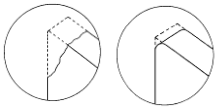

When cutting small pieces run the band until approximately 300 cm^2 of material has been cut. When cutting large pieces run the band for approximately 15 minutes. When the band has been run, increase the lowering speed of the arm to normal. The running in of the saw band avoids micro chips on the cutting edges of a new saw band ensuing from first excessive stress. This would decrease its lifespan substantially. The optimal running in of the saw band produces ideal rounded cutting edges and therefore the conditions for a maximum lifespan are met.

***Note:** Run-in reground saw bands too.*

SHAPED MATERIAL (D_p, S = mm)

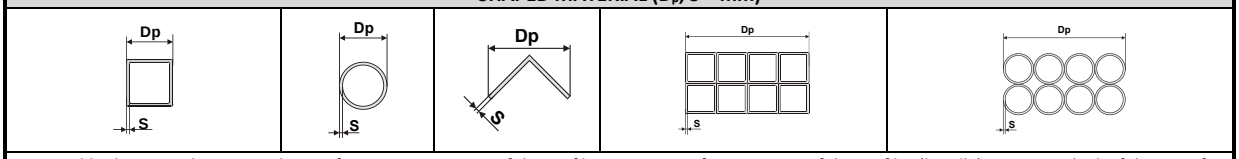

Note: Table shows tooth system selection for cutting one piece of the profile. For cutting of more pieces of the profiles (bundle), you must think of the size of the wall as double size of the wall of one profile (that means, size „S" equates to 2×S). In table, there are tooth systems constant and variable.

Size of the wall S [mm]	Tooth system (Z_pZ) Outer diameter of the profile D_p [mm]					
	20	40	60	80	100	120
2	32 S	24 S	18 S	18 S	14 S	14 S
3	24 S	18 S	14 S	14 S	10–14 S	10–14 S
4	24 S	14 S	10–14 S	10–14 S	8–12 S	8–12 S
5	18 S	10–14 S	10–14 S	8–12 S	6–10 S	6–10 S
6	18 S	10–14 S	8–12 S	8–12 S	6–10 S	6–10 S
8	14 S	8–12 S	6–10 S	6–10 S	5–8 S	5–8 S
10	-	6–10 S	6–10 S	5–8 S	5–8 S	5–8 S
12	-	6–10 S	5–8 S	5–8 S	4–6 K	4–6 K
15	-	5–8 S	5–8 S	4–6 K	4–6 K	4–6 K
20	-	-	4–6 K	4–6 K	4–6 K	3–4 K
30	-	-	-	3–4 K	3–4 K	3–4 K
50	-	-	-	-	-	3–4 K

Size of the wall S [mm]	Tooth system (Z_pZ) Outer diameter of the profile D_p [mm]					
	150	200	300	500	750	1000
2	10–14 S	10–14 S	8–12 S	6–10 S	5–8 S	5–8 S
3	8–12 S	8–12 S	6–10 S	5–8 S	4–6 K	4–6 K
4	6–10 S	6–10 S	5–8 S	4–6 K	4–6 K	4–6 K
5	6–10 S	5–8 S	4–6 K	4–6 K	4–6 K	3–4 K
6	5–8 S	5–8 S	4–6 K	4–6 K	3–4 K	3–4 K
8	5–8 S	4–6 K	4–6 K	3–4 K	3–4 K	3–4 K
10	4–6 K	4–6 K	4–6 K	3–4 K	3–4 K	2–3 K
12	4–6 K	4–6 K	3–4 K	3–4 K	2–3 K	2–3 K
15	4–6 K	3–4 K	3–4 K	2–3 K	2–3 K	2–3 K
20	3–4 K	3–4 K	2–3 K	2–3 K	2–3 K	2–3 K
30	3–4 K	2–3 K	2–3 K	2–3 K	1,4–2 K	1,4–2 K
50	2–3 K	2–3 K	2–3 K	1,4–2 K	1,4–2 K	1,4–2 K
75	-	2–3 K	1,4–2 K	1,4–2 K	1,4–2 K	0,75–1,25 K
100	-	-	1,4–2 K	0,75–1,25 K	0,75–1,25 K	0,75–1,25 K
150	-	-	-	0,75–1,25 K	0,75–1,25 K	0,75–1,25 K
200	-	-	-	0,75–1,25 K	0,75–1,25 K	0,75–1,25 K

SOLID MATERIAL (D = mm)

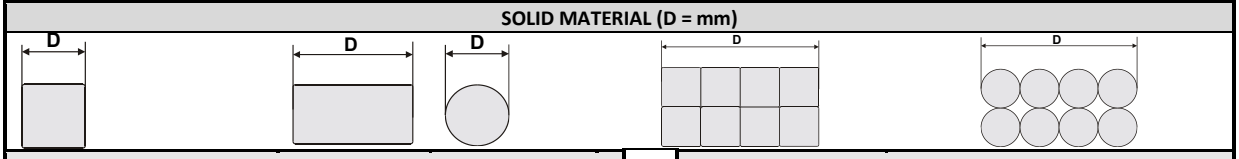

Constant tooth system		Variable tooth system	
length of the cut D	tooth system (Z_pZ)	length of the cut D	tooth system (Z_pZ)
to 3 mm	32	to 30 mm	10 –14
to 6 mm	24	20–50 mm	8–12
to 10 mm	18	25–60 mm	6–10
to 15 mm	14	35–80 mm	5–8
15–30 mm	10	50–100 mm	4–6
30–50 mm	8	70–120 mm	4–5
50–80 mm	6	80–150 mm	3–4
80–120 mm	4	120–350 mm	2–3
120–200 mm	3	250–600 mm	1,4–2
200–400 mm	2	500–3000 mm	0,75–1,25
300–800 mm	1,25		
700–3000 mm	0,75		

3. Ovládání stroje / Machine control / Bedienung der Maschine

3.1. Starting the band saw and switching on the safety circuits

» 1. Turn the main switch into position 1 –ON.
The main switch is located on the side of the control panel

2. Switch on the Safety circuit of the saw. The safety circuit will run a check on all safety switches.

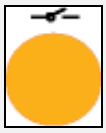

3.2. Control elements

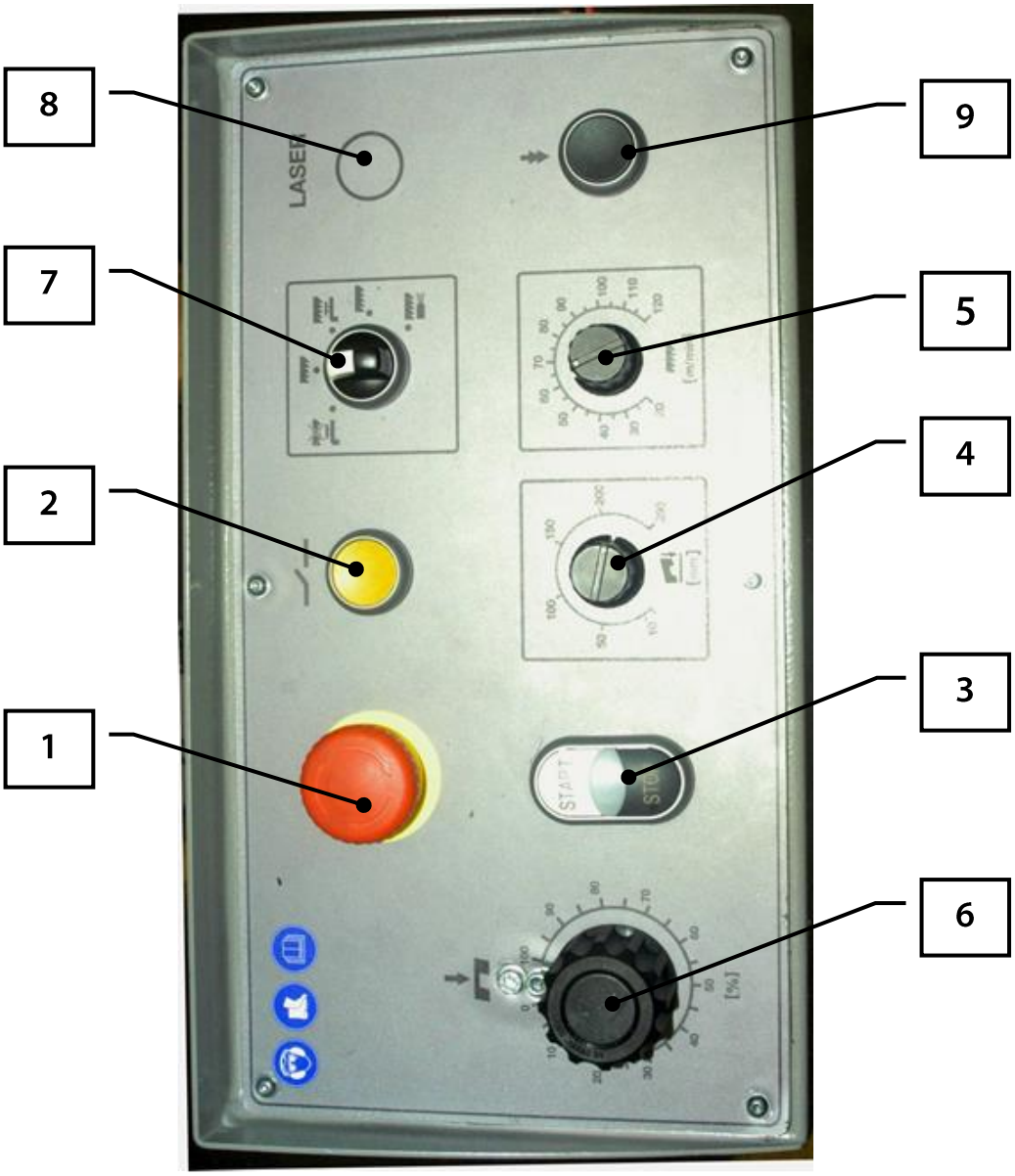

1	**TOTAL – STOP button** Immediately stops the machine in a case of emergency.
2	**Safety circuit** Press button to turn on the safety circuit
3	**START** Starts the drive of the saw band.. **STOP** Stops the drive of the saw band
4	**Arm height setting** According to the scale on the control panel, you can limit the maximum frame top position at the working (semi-automatic cycle). Numbers on the scale indicate the distance between saw blade and vice board near the fixed vice jaw. Limiting the height of the arm can reduce the time of the cutting cycle.
5	**Ergonomic 320.258 DGH with a frequency converter** **Frequency converter – setting of the cutting speed** Serves to set the speed of the saw band during cutting with the possibility of the frequency converter (**20** to **120** m. min^{-1}).
6	**Regulation valve** The regulation valve sets the speed of the descent of the saw arm into the cut. The speed is limited by the setup of the pressure into the cut on the guiding cubes. **Note:** If the throttle valve is tightened too much when being closed, the valve seat can be worn out, which will cause leakage. Always tighten the valve gently.
7	**Setting of the cooling mode of the saw band** By turning the knob into the corresponding position the required cooling mode is set. See chapter regarding the setting of the cooling mode
8	**Laserliner – optional equipment** Laser beam switch
9	**Rapid shift – optional equipment** The rapid shift allows a faster descent of the arm into the cut than the maximum speed of descent reached with the hydraulic regulation. For acceleration of descent of the arm into the cut press the rapid shift button.

3.3. Machine control

3.3.1. Semiautomatic cycle

1. Open the vice jaws by hand wheel.
2. Set the length stop to the desired length of the material.
3. Set the desired cutting angle.
4. Insert the material and pull it to the length stop.
5. Move the vice jaw to about 5 mm from the material

For a longer distance movement of the vice jaw use the rapid shift option:

a) loosen the arresting lever of the moveable jaw of the main vice

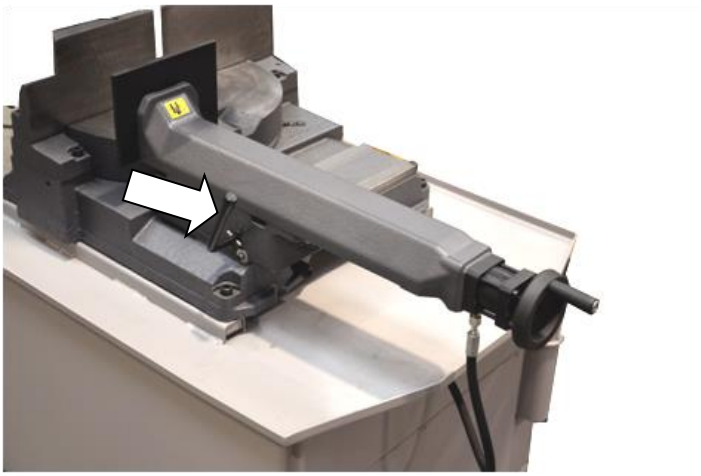

b) move the jaw to the required distance

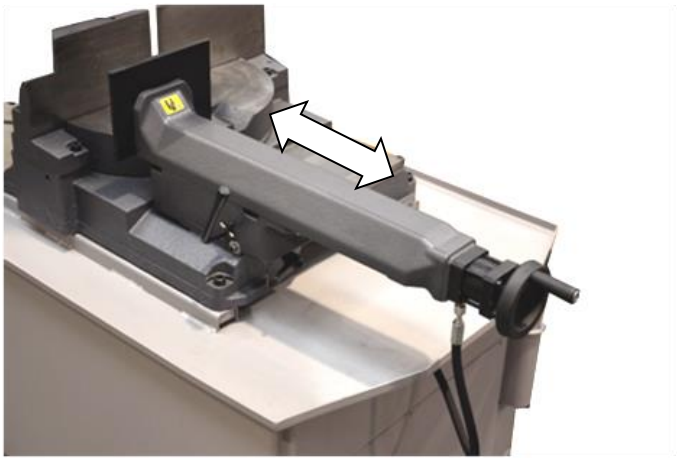

c) tighten the arresting lever

For shifting the jaw for a shorter distance use the hand wheel.

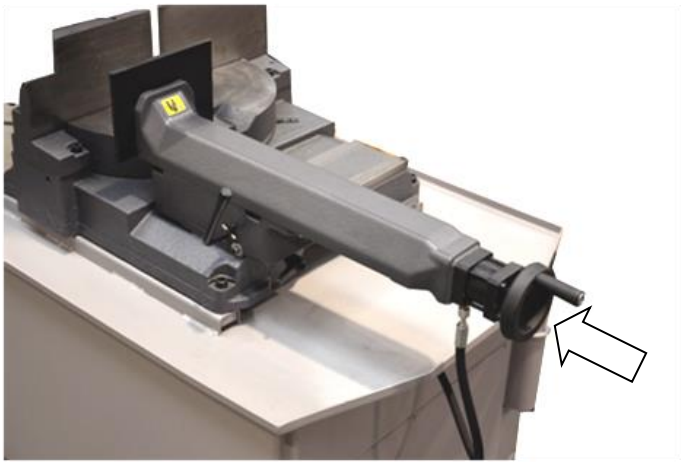

6. Lift the saw arm to the maximum upper position and set the maximal upper position of the arm for working (semiautomatic) cycle using the button on the control panel.

   The saw arm returns to this position when cut is finished.

7. Set the left guiding cube of the saw band as close as possible to the material.
8. Set the saw band speed.
9. Set the speed of the saw frame sinking.
10. Start saw band drive by button START. The vice clamps the material. Semi-automatic cycle of the cutting is started.

> ***Attention***
> *Saw frame sinking is possible to stop by governing valve closing!*
> *Saw band drive is possible to stop by button STOP or by button TOTAL STOP in emergency causes during cutting.*

After pressing START :

a) The vice automatically clamps the materiál

b) The drive of the saw band is turned on and the saw arm starts moving to into cut

11. After the material cutting, the saw frame is lifted to the top position, the saw band drive is stopped and the vice is opened.

12. Remove the cut. Now you can repeat whole progress.

3.3.2. Setting of the material length

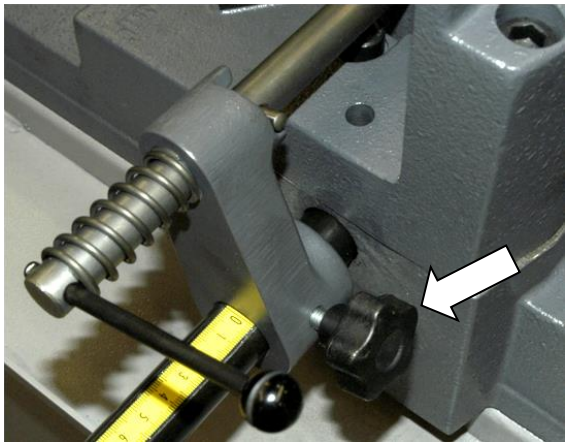

1. Loosen the clamping screw of the length stop

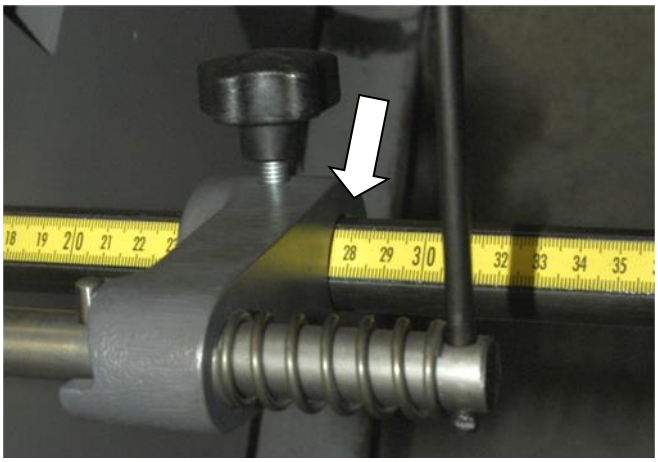

2. Shift the length stop to the required length and tighten the clamping screw.

Warning!
The length stop enables a gap between the length stop slat line and the material to avoid clenching the saw band in the cut during cutting. Set the gap of the length stop by turning the lever in the direction of the arrow.

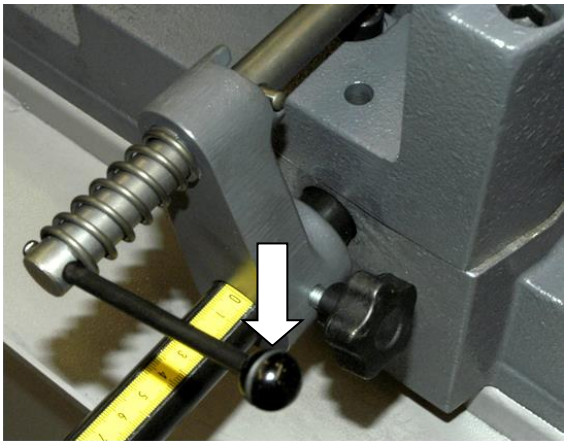

3.3.3. Setting of the cutting angle

The band saw **Ergonomic 320.258 DGH** allows cutting under angles from **-45°** to **60°**. For an easier setup of common angles, there are latches on the turning console at every 15° angle increment. Locking in the latches can be felt when turning the saw frame by hand. It is not necessary to loosen the latches for setting a different angle, just turn the saw frame console in the direction required.

Picture	Procedure
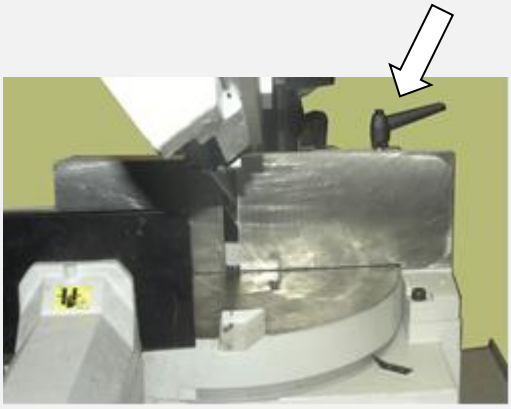	1. Raise the saw frame and loosen the turning console clamping lever.
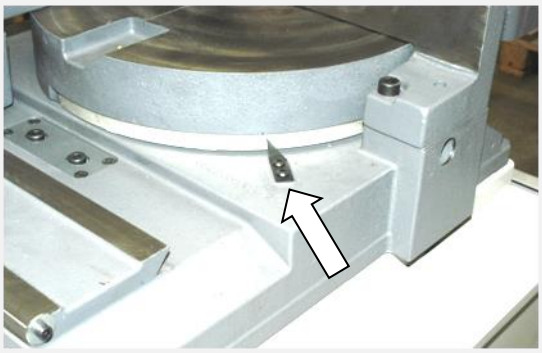	2. Set the required angle of the cut according to the scale on the turning console.

Picture	Procedure
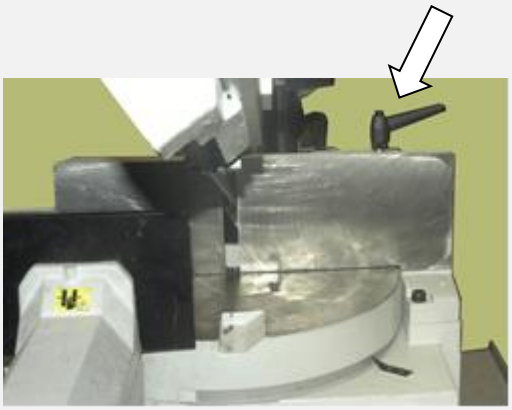	3. Tighten the clamping lever of the console.
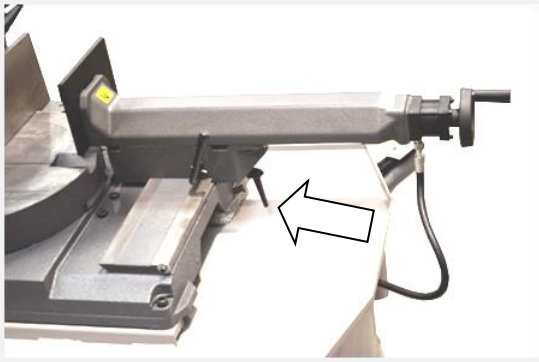 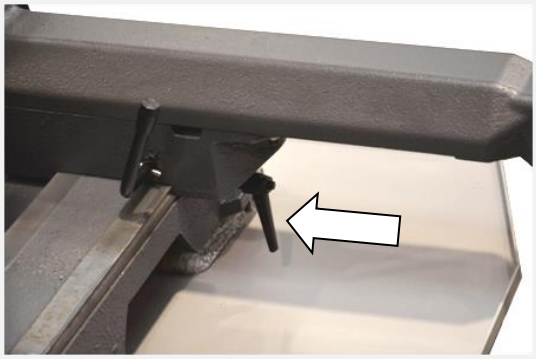	4. Loosen the clamping lever of the vice.

Picture	Procedure
angle < 0° **angle ≥ 0°** 	5. Shift the vice according to the set angle of the cut. For negative angles move the vice to the right, for positive and zero angles to the left.

3.3.4. Setting of the optimal span of the guiding cubes

For reaching a smooth and accurate cut it is necessary to move the left guiding cube as close to the cut material as possible.

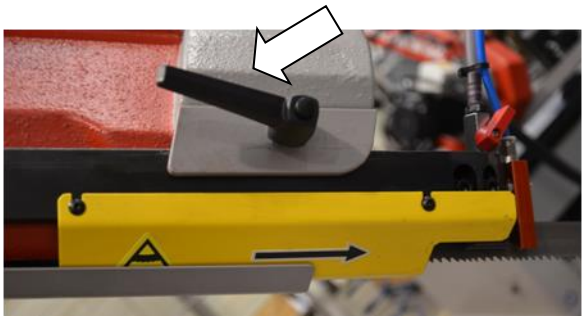

1. Loosen the lever of the left guiding lath and move the left part of the saw band guide so that the edge of the left guiding cube will be as close to the material as possible.
2. Lower the arm into the lower position and check, the position of the guiding cube in respect to the loading surface. The guiding cube should be positioned aprox.10 mm from the loading surface of the vice.
3. Tighten the lever of the guiding lath and check the setting of the guiding cube one more time to avoid collision with the vice jaw or clamping table.

3.3.5. Cutting speed adjustment

Picture	Description
Ergonomic 320.258 DGH with freq. Converter	• Change band saw speed by frequency converter in range **20–120** m.min^{-1}.

3.3.6. Speed adjustment of the arm lowering

Set the speed of the arm lowering to the cut by this regulation knob on the control panel (no.6)

- turn clockwise to lower the speed of the descent
- turn counter clockwise to increase the speed of the descent

Warning!
If the throttle valve is tightened too much when being closed, the valve seat can be worn out, which will cause leakage. Always tighten the valve gently

Note

If the regulation valve is fully closed, the arm is fixed in a vertical position.

To allow the arm to move downwards (into cut) it is necessary to release the valve.

3.3.7. Setting the type of cooling

The required type of cooling can be chosen using knob no. 3 o the control panel.

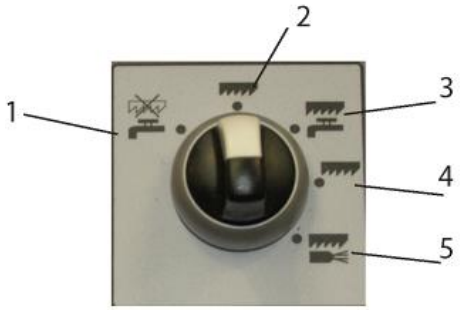

Cooling with liquid:

1. The cooling pump runs, even if the pump is turned off (washing)
2. The saw band runs without cooling.
3. The cooling is turned on together with the saw band drive

Cooling with oil vapor- Microniser (optional equipment)

4. Saw band runs without cooling.
5. Cooling is turned on together with the saw band drive.

3.3.8. Pressure adjusting to the cut

The band saw is equipped with automatic down-feed regulator on the right guiding cube. The band saw can be equipped with down-feed regulator on the left guiding cube for requirement of the customer.

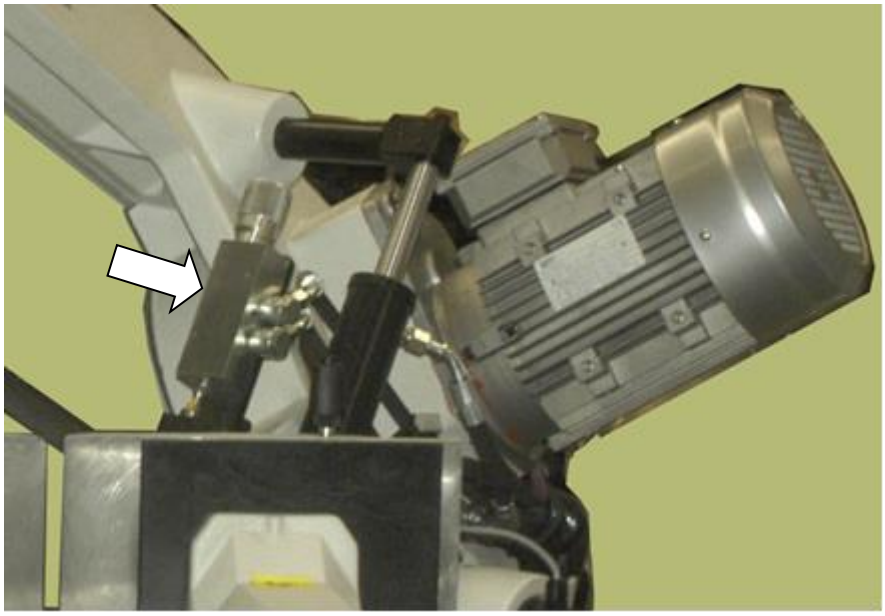

Adjusting the down-feed regulator is performed with regulating wheel on the guiding cube. Screw on the wheel, the pressure is increased. Screw off the wheel, pressure is lowered.

Downfeed	Description
downfeed pressure is bigger	Screw on the wheel
downfeed pressure is smaller	Screw off the wheel

Picture	Sequence
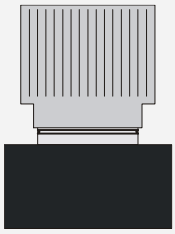	**One visible neck** Solid material over ∅200 mm.
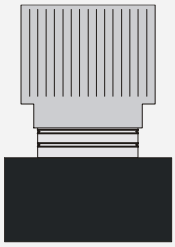	**Two visible necks** Solid material to ∅80 -∅200 mm.
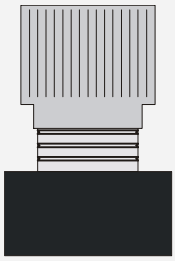	**Three visible necks** • Pipes and shapes material with surface from 10 – 15 mm. • I-shaped material from 200 – 280 mm. • Solid material to ∅80 mm.
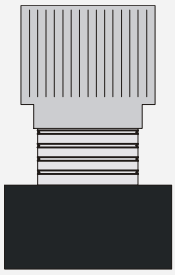	**Four visible necks** • Pipes and shapes material with surface to10 mm. • I-shaped material to 200 mm.

3.3.9. Laserliner – optional accessory

The device is used to ascertain exact position of the material cut before cutting.

The cut is indicated by the laser beam projected on the surface of the prepared material..

Set the laserliner so that the line of the beam looks like the image.

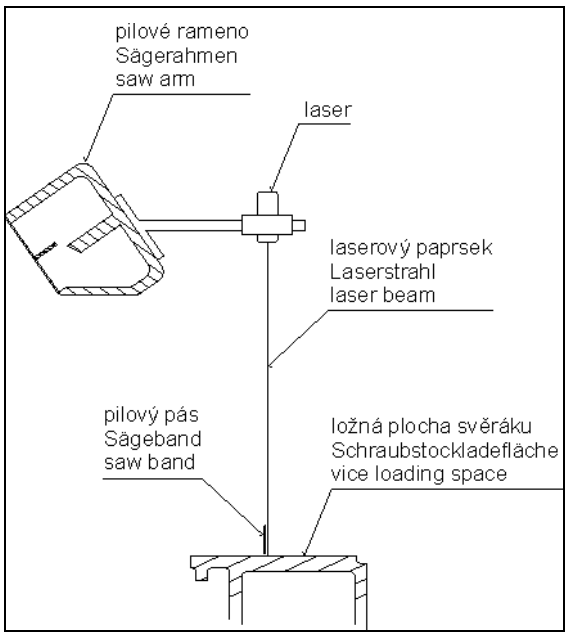

The switch for Laserliner is located on the control board.

3.3.10. Device for regulation of clamping pressure (optional accessory)

The hydraulic pressure device is determined for pressure setting on the main vice and feed vise.

Warning !
*Because the hydraulic pressure equipment pressure **2,2 – 4** MPa, loosen the screws with caution!*

Um die Spanndruck einstellen

1. Lösen Sie die Sicherungsmutter der Regulierungsschraube des Druckventils..

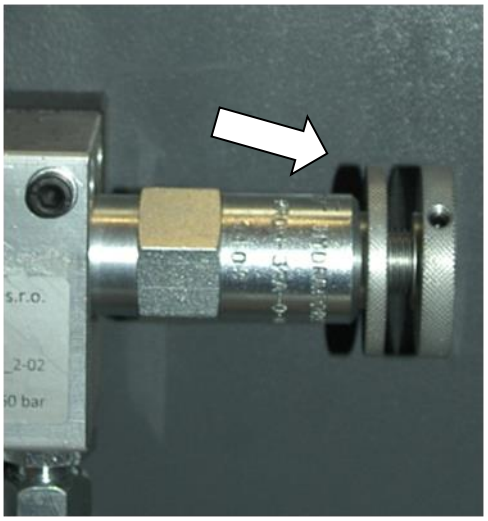

2. Mit der Regulierungsschraube stellen Sie den Druck auf gewünschten Wert ein. Den eingestellten Wert zeigt der Anzeiger am Manometer der Einrichtung für Spanndruckregulierung.

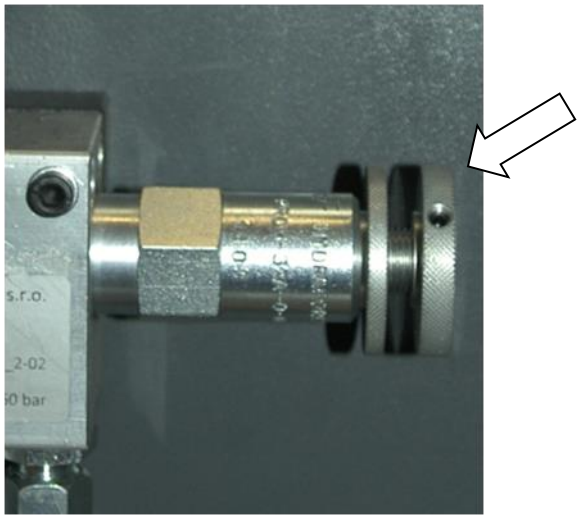

- Beim Drehen des Druckventils ***im Uhrzeigersinn erhöht sich der Druck.***
- Beim Drehen des Druckventils ***gegen Uhrzeigersinn vermindert sich der*** Druck.

Der eingestellte Wert wird vom Zeiger auf dem Manometer der Spanndruckregelung angezeigt.

Der empfohlene Wert befindet sich zwischen Werten, die mit grünen Pfeilen am Manometer der Einrichtung für Spanndruckregulierung markiert sind.

3. Anziehen Sie die Sicherungsmutter der Regulierungsschraube des Druckventils..

Achtung:

Zwecks Einstellung des Spanndrucks muss der hydraulische Druck ganzer Anlage nicht eingestellt werden.

3.4. Material insertion

- Never walk under a suspended load!
- Never climb onto the-roller conveyor!
- Do not hold the material for clamping in the vice! The vice can cause injuries!

3.4.1. Selecting means of manipulation

- Use the sufficient means to lift and transfer the material!
- Handle the material only with a lift truck or use suspension strands and a crane!
- Do not use the lift truck or crane in case that you do not have the license to operate it!

3.4.2. Insertion

Insert material into the vice and ensure that the material cannot move in the vice or fall from the vice after the clamping. If you are cutting long pieces (for example rods, tubes), you must use a roller conveyor for shifting the material to the band saw. Contact Bomar for more information about roller conveyors.

Make sure the conveyor is long enough and the material cannot drop off the conveyor.

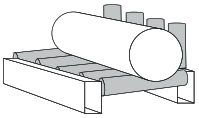

Make sure round pieces always stay on two vertical rollers and cannot fall off the conveyor!

3.4.3. Bundle material cutting

If you want to cut the material in bundles, it is suggested to load the material in the following way.

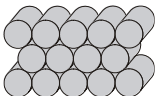

Round material bundle: For round material take care that the bars are put according to the picture. If the bars are put differently, they might slide during handling.

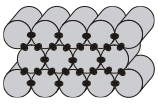

It is recommended to always weld the material at the rear end of the bundle to secure it from moving. Before welding always, switch the machine off with the main switch! The magnetic fields, which occur during welding, may damage the controls!

4. Údržba stroje / Machine maintenance / Wartung

4.1. Saw band dismantling

1. Lift the arm to its uppermost position and lock the arm in position with the regulation valve.

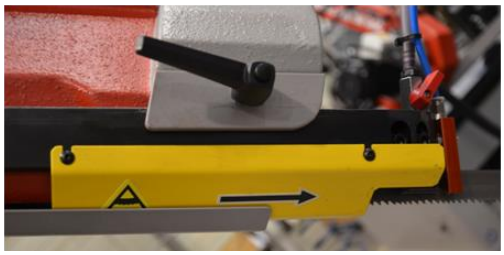

2. Remove the safety covers of the band. The covers are tightened with screws.

3. Open the back cover of the arm. It is mounted with two plastic head screws.

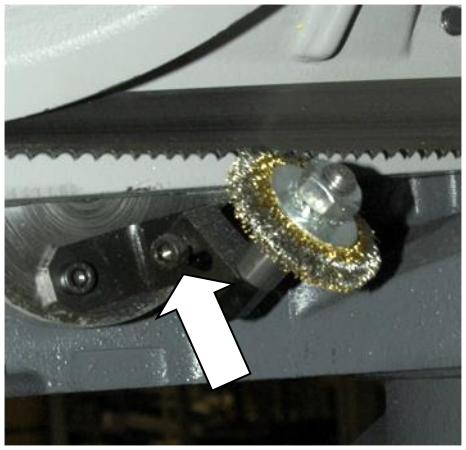

4. Loosen the holder of the brush and turn it away from the band so it does not hinder the dismantling of the band.

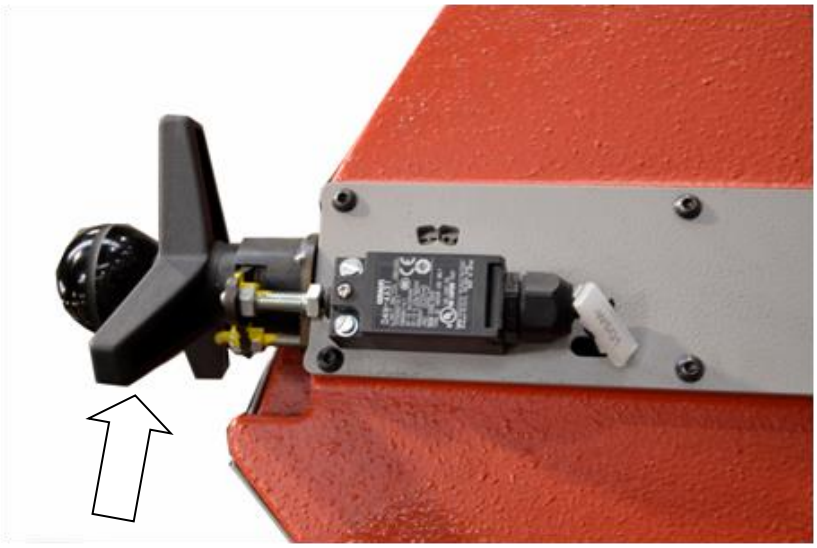

5. By turning the tightening star to the left loosen the stretching of the band.

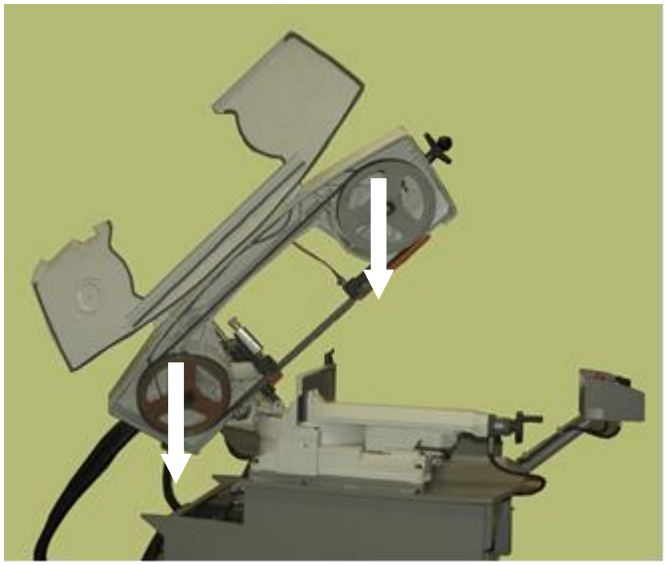

6. Pull the saw band from the wheels.

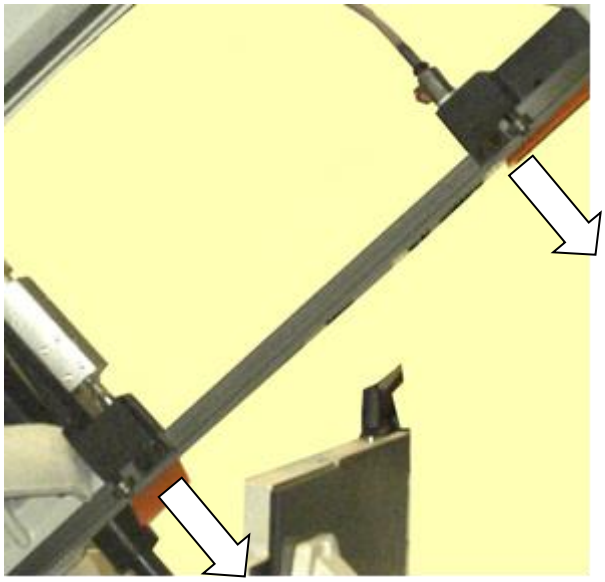

7. After that pull out the band carefully from the guiding cubes.

4.2. Saw band installation

1. Prior to installation, clean the track wheels, guiding cubes and inner side of the arm thoroughly of all traces of chips and dirt. ***Keep in mind the teeth direction when installing the saw band***.

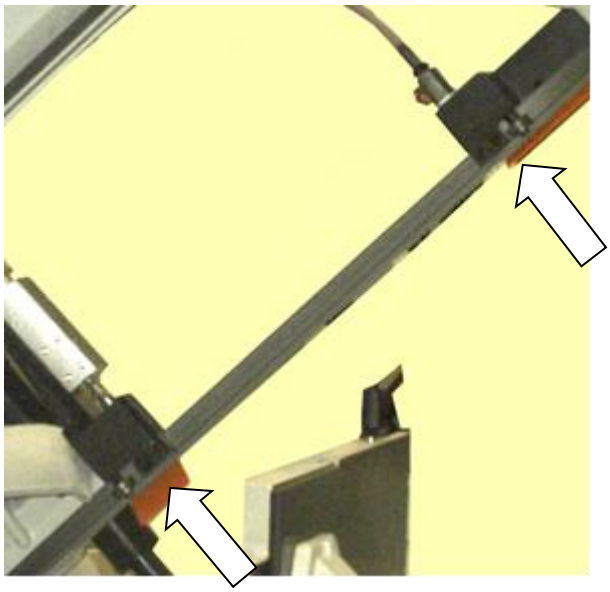

2. Insert a new saw band in the guide cubes. Make sure the saw band runs between both guiding rollers and that it is pushed all the way to the top.

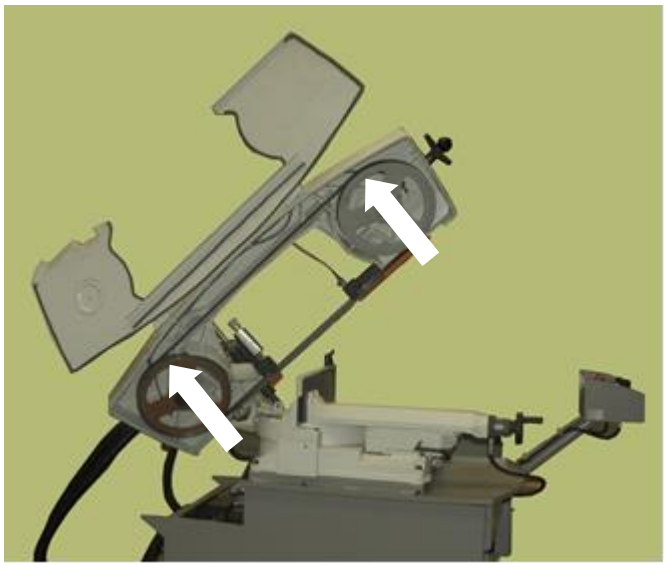

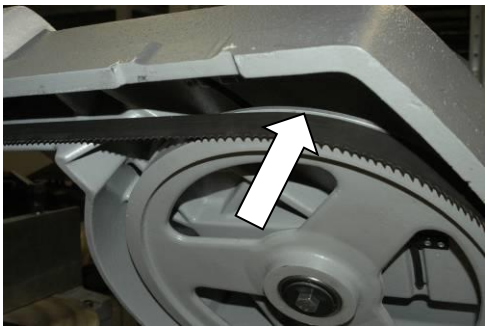

3. Put the saw band on both guiding wheels. Make sure that the saw band ridge fits tightly to the wheel rim. Push the saw band as close to the rim as possible..

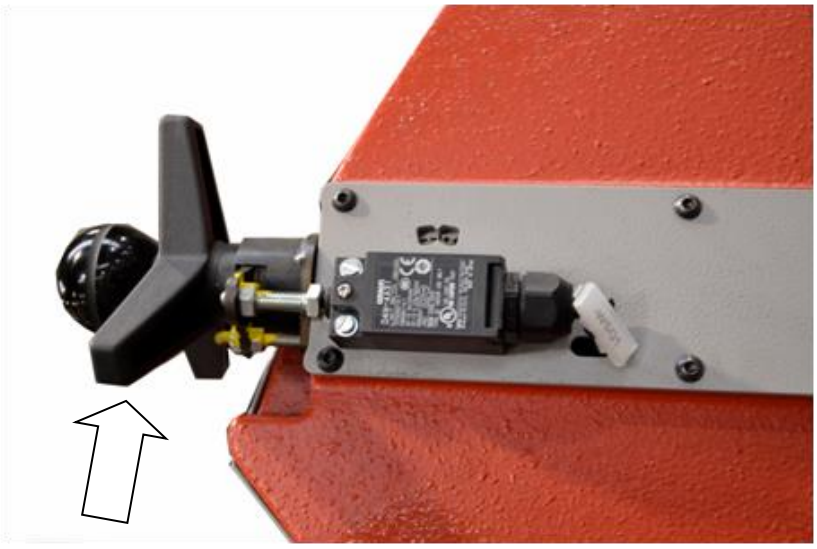

4. Turn the tightening star to the right until you gently stretch the band. Now you can remove the plastic cover on the saw band.

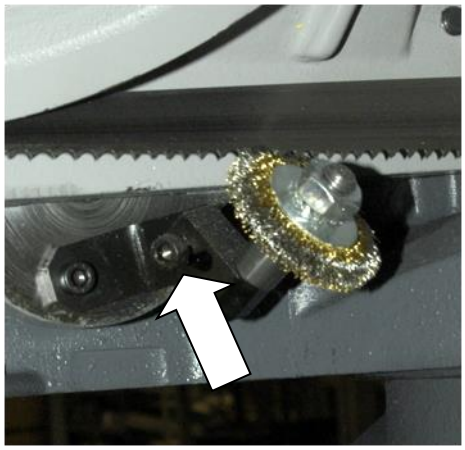

5. Adjust the brush to the saw band and tighten the holder screws.

6. Close the back cover and secure it with two plastic head screws.

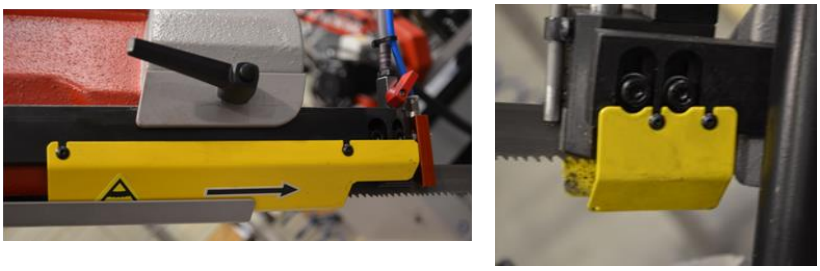

7. Mount the safety covers of the band.

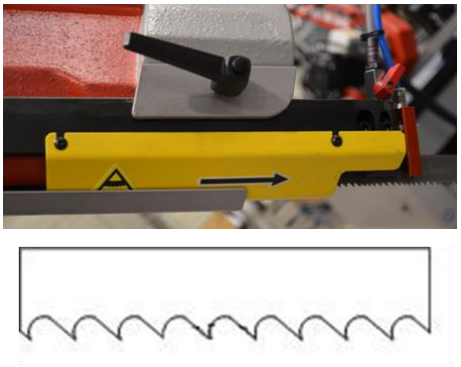

Arrow on the cover must agree with the direction of the teeth. If it does not, you have to flip the saw band.

4.3. Saw band stretching and inspection

Correct saw band stretching is one of the most important factors, which influences accuracy and saw band lifespan. Stretch the saw bands according to the band saw and the selected saw band type. Keep to the recommendation of your manufacturer.

Pilový pás Sägeband Saw band	Napětí pilového pásu Sägebandspannung Blade tension	Napětí pilového pásu PSI (pro Tenzomat) Sägebandspannung PSI (für Tenzomat) Blade tension PSI (for Tenzomat)
20 x 0,9 mm	160 $N.mm^{-2}$	23 500
27 x 0,9 mm	180 $N.mm^{-2}$	26 500
34 x 1,1 mm	210 $N.mm^{-2}$	30 500
41 x 1,3 mm	240 $N.mm^{-2}$	35 000
54 x 1,3 mm	240 $N.mm^{-2}$	35 000
54 x 1,6 mm	280 $N.mm^{-2}$	40 600
67 x 1,6 mm	290 $N.mm^{-2}$	42 000
80 x 1,6 mm	300 $N.mm^{-2}$	43 500

4.3.1. Saw band stretching

1. After installation of the saw band stretch it gently, so it does not fall of the wheels.

2. Mount the Tenzomat on the saw band and secure it with screws.
3. Stretch the saw band until it is stretched to the recommended value.

For a quick control of the tension of the band there is an indicator near the tightening star. If the indicator agrees with the picture bellow, the band is stretched correctly.

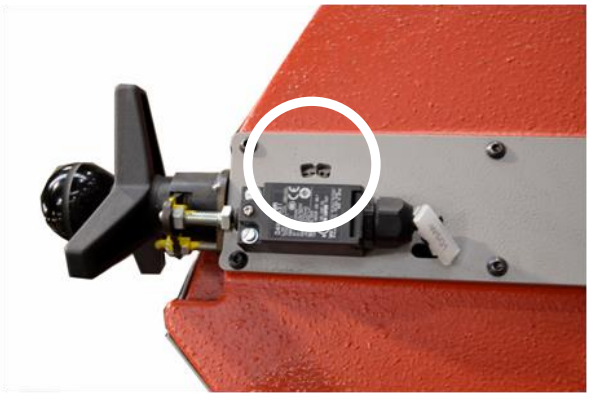

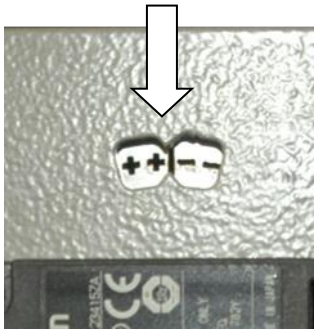

4.3.2. Saw band inspection

If the band does not run correctly, following problems can appear:

- The band falls down from the wheels – the band or the protective cover of the band can be damaged.
- The band runs on the rim of the stretching wheel – the band or the rim of the wheel can be damaged.

1. Switch on briefly the saw band drive and then switch it off
2. Disconnect the saw from the electrical network.
3. Open cover of the wheels and check the position of the saw band on the both wheels.

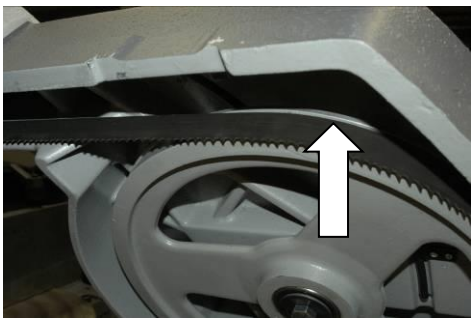

- If the distance between backside of the saw band and the wheel rim is **1 mm**, the setting is right.

- If the distance is bigger than **1 mm**, or the saw band runs on the rim of the wheel, adjust the saw band.

4. Close cover of the saw band.

4.4. Adjustment

4.4.1. Saw band run adjustment

The saw band run is set with screw in the stretching cube on the saw frame. Optimal distance has been determined at **1mm**

- Turn the screw to the right, the saw band closes to the stretching wheel rim
- Turn by screw to the left, the saw band departs from the stretching wheel rim

After setting check the saw band run again.

4.4.2. Hard metal guides adjustment on the machine

Hard metal guides adjustment is one of the most important criterions which influence cutting accuracy and saw band lifespan. Therefore it is essential to check that the adjustment of the hard metal guides is correct

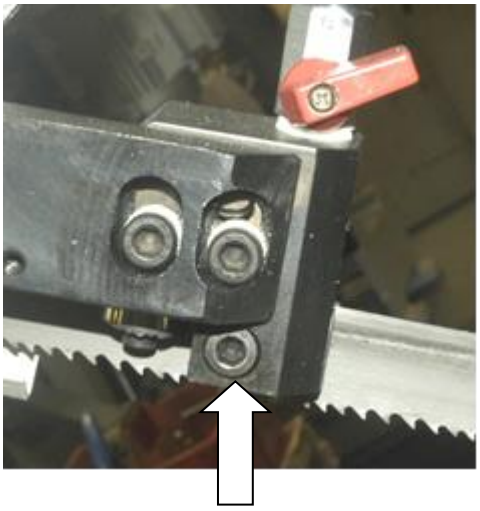

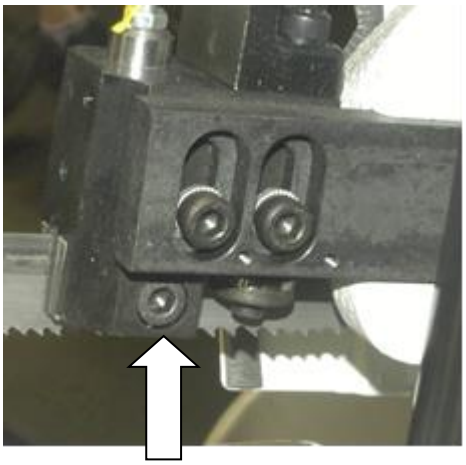

1. Tighten the screw on the side of guide cube so that the band is loosened
2. Loosen the screw slowly and let the hard metal plate touch the band. You must be able to turn the screw by hand. Set the hard metal guiding on the right cube in the same way.

Make sure that the hard metal guides do not put up to much resistance otherwise the lifetime of the saw band and drive decreases.

4.4.3. Guide cube adjustment

Cutting quality and saw band life is also dependent on guide cubes adjustment

Therefore this adjustment has to be checked periodically

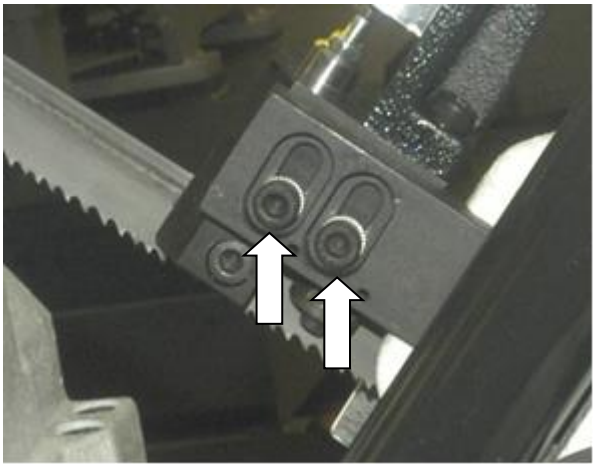

1. Loosen both mounting screws on the guide cubes and push it carefully to the band. Make sure the saw band is not bent; otherwise the cube will press against the band and damage it
2. Fasten both tightening screws again

Notice:
If the guide cube is correctly adjusted, the upper edge of the cube and the ruler are parallel.

4.4.4. Brush adjustment

The brush has essential influence on cutting performance, saw band lifetime, lifetime of the wheels and hard metal guides and cutting accuracy. Therefore the brush has to be checked every shift.

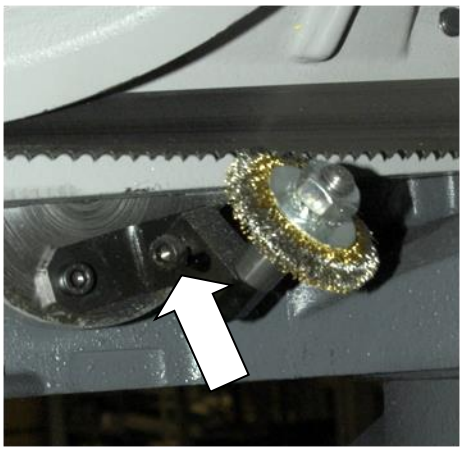

1. Release the tightening screw of the brush so that it is possible to move the brush.

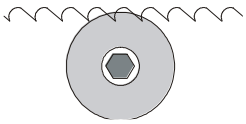

2. Adjust the brush to the saw band. **Its ends must not reach the saw band teeth bottoms.**
3. Tighten the screw again and turn on the band driver. If the chip removing brush is correctly fastened the brush turns smoothly with the saw band.

Attentionr!
Do not tighten the screw with brute force!

4.4.5. Adjusting the limit switch of the saw band stretching

After the saw band is replaced, the limit switch setting must be checked. If the limit switch is not set correctly, the band is stretched either too much or too little.

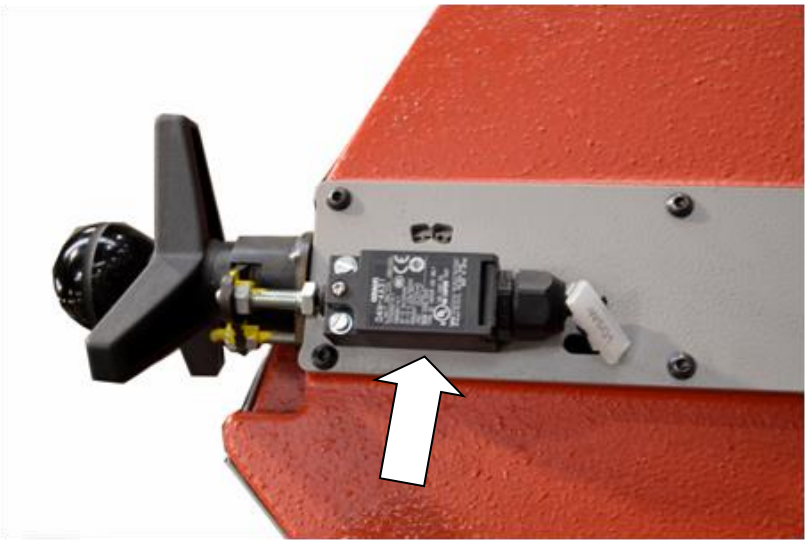

1. Stretch the band with help of the TENZOMAT to an optimal value (Tenzomat chart)
2. Release the nut on the stop screw
3. Start the band drive. Two scenarios may occur:
   a) If the engine is switched on, but it does not run, turn the screw to the left until the engine starts to run
   b) If the engine runs turn the screw to the right until it stops, then turn the screw shortly to the left until the engine starts running again
4. Lock the stop screw using locking nut and check the adjusting of the limit switch again

4.4.6. Saw frame lower position stop adjustment

The lower stop limits the lowest position of the saw frame. This stop has to be checked at least once a month. If the lower stop is adjusted incorrectly, the loading surface of the table can be cut too deeply or the material will not be cut completely

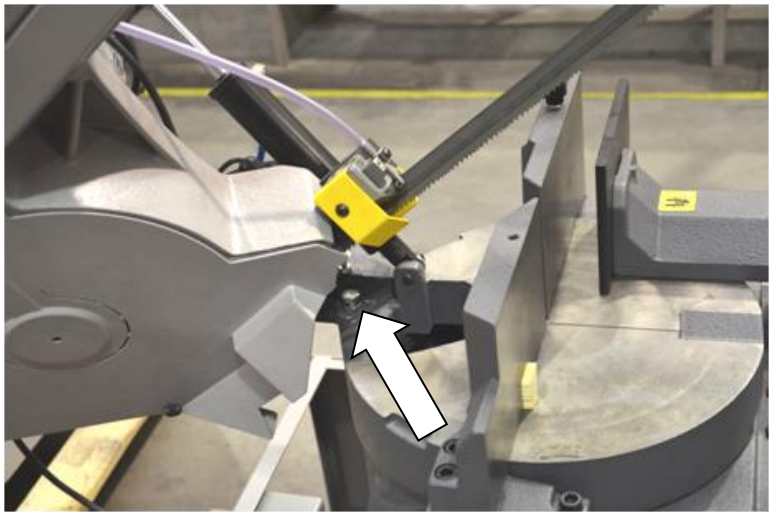

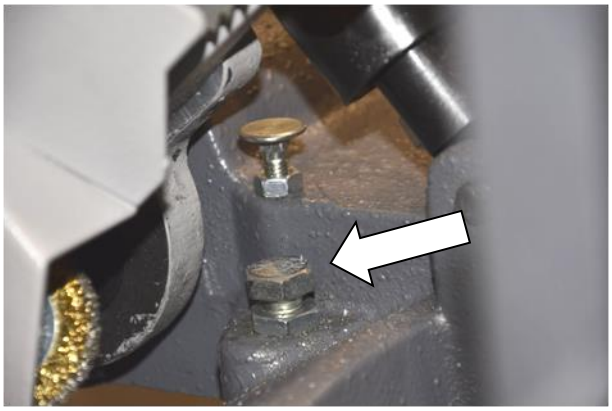

1. Raise the saw frame to the upper position
2. Release the nut of the adjusting screw and adjust the stop
3. Fasten the adjusting screw with the nut again
4. Set the limit switch of the lower arm position

4.4.7. Adjustment of the limit switch of saw frame lower stop

If you have adjusted the lower stop of the saw frame, the limit switch adjustment inspection is required

Setting check

Lower the arm to the lowest position. If the arm lays on the lower stop and the switch reacts, the setting is correct. In other case carry out the switch setting

Switch setting

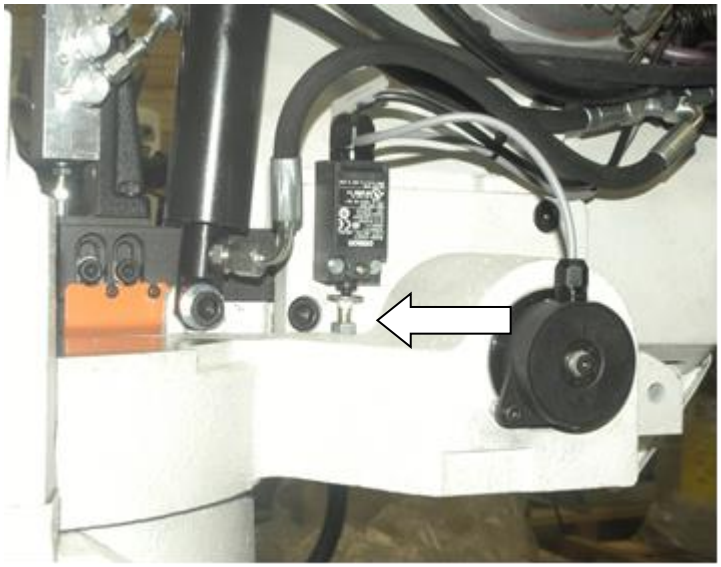

1. Release the nut of the stop screw and screw down the stop screw
2. Lower the arm to the lower stop and turn on the band driver
3. Screw out the stop screw until the band driver stops
4. Secure the screw with nut again and check the limit switch setting once more

4.4.8. Adjustment of a throttle valve

Switch off the machine by its main switch. Let the sawing head down at the bottom. Close the throttle valve gently.

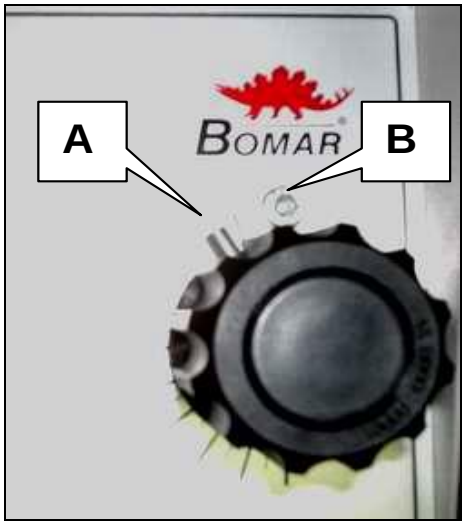

The worm screw (pos. A) must be next to the stop (pos. B), when the valve is closed.

Otherwise, you must loosen the worm screw, lift the plastic knob and close the throttle valve to the maximum. Next loosen the worm screw and take off the plastic knob. Put it back so that the worm screw must be next to the stop while the valve is closed. Then tighten the worm screw again.

Turn the machine on and test the down-feed control

4.5. Cooling agents and chip disposal

The quality of the cooling agent will deteriorate due to:	If the solution is too weak:	If the solution is too strong:
• use of contaminated water • impurities • oil contamination from the outside (hydraulics, gears) • high operating temperatures • lack of air circulation • wrong concentration	• corrosion protection is diminished • lubrication decreases • microbial attack is more likely	• the cooling ability is decreased • foam production increases • emulsions stability deteriorates • sticky residue develops

4.5.1. Coolant inspection

The state of the cooling agent has a significant influence on the cutting quality and on the lifespan of the machine. Lifetime of the cooling liquid is 1 year, after this time we recommend change the cooling liquid. This time is dependent on the degree of pollution of the cooling liquid (especially with oils) and on other factors.

Check level of the cooling liquid and function of the pump periodically!

> ***Note:***
> *If the state of the cooling liquid is not satisfactory, the cooling liquid must be replaced.*

Check the state of the cooling agent according to the following table:

Testing	Interval	Method	Condition	Precaution
Liquid level	daily	visually	too low	check concentration, add water or emulsion
Concentration	daily	refractometer densimeter	too high too low	refill water refill base emulsion
Smell	daily	by sense of smell	unpleasant smell	good ventilation, add biocides or replace coolant
Contamination	daily	by sense of smell	visible oil leaks, sludge fungi	surface cleaning, fix leaks, add biocides or fungicides; clean the system with a cleanser* prior to the coolant replacement
Corrosion-protection	when necessary	visually chip test Herbert-test	insufficient corrosion protection	test stability, if necessary – increase concentration or pH value
Stability	when necessary	refractometer	oiling	add concentrate, enquire the supplier
Foam reaction	when necessary	shaking test	too much foam, foam disperses too slowly	avoid aeration, increase water hardness, fix with defomer

* According to manufacturer's instructions

4.5.2. Cooling liquid preparation

Prepare a mixture of water and cooling liquid. Conform the notes of the manufacturer and keep the manufacturer's-approved concentration

All instructions are stated on the tank of the cooling liquid or in documentation of the cooling liquid. For cooling liquid usage and disposal heed the instructions of the manufacturer.

Fill the mixture of water and cooling liquid to the tank of the cooling system

When filling the tank with the cooling liquid take care that the liquid will not drip out of the tank and the tank does not overflow

Keep to the manufacturer specified recommendations for adding the anticorrosive agents, the antifreeze or other agents! Mixing two chemicals can produce toxic and aggressive substances, which can damage your health or the cooling system of the machine

Note: If the machine is equipped with Microniser (see. **Special accessory**), fill the tank of the Microniser with specified cooling liquid. Then the microniser is ready for the operation

The quality of the cooling agent will deteriorate due to:

- use of contaminated water
- impurities
- outside oil contamination (hydraulics, gears)
- high operating temperatures
- lack of air circulation
- wrong concentration

If the solution is too weak:

- corrosion protection is diminished
- lubrication decreases
- microbial attack is more likely

If the solution is too strong:

- the cooling ability is decreased
- foam behavior increases
- emulsions stability deteriorates
- sticky residue develops

4.5.3. Chips disposal

Chips resulting from cutting operations must be disposed of in accordance with the relevant regulations.

- Let the chips drip excess fluid!
- Put the chips into a watertight container. Make sure that the container does not leak, because even after a long dripping time, the chips still contain coolant residues.
- *Place the container into the care of a disposal company equipped for the disposal of chips contaminated with cooling liquid.* In case the machine is equipped with micronisation device, the chips must also be handed over to a disposal company.

4.6. Gearbox oils and greases

4.6.1. Gearbox oils

In gearboxes, oil is used for the whole lifetime of the gearbox. We recommend replacing of the filling oil in case of repair.

Use oils with DIN 51517 specification for the gearboxes. Select the ISO VG viscosity class according to the original oil.

Attention:
When replacing the oil, use oils recommended by BOMAR or oils from other manufacturers, which have comparable parameters. Do not forget, that mineral and synthetic oils must not be mixed!

Recommended oils and quantity according to the type of the band saw

Band saw	Gearbox oil	Capacity
Ergonomic 320.258 DGH	Paramo PP7	2,0 l
Swarf conveyor	Shell Tivela S 320	0,075 l

Comparative table of the gearbox oils

Manufacturer	Viscosity grade		
	ISO VG 100	ISO VG 220	ISO VG 320
BP	Energol GR-XP 100	Energol GR-XP 220	Energol GR-XP 320
Castrol	Alpha SP 100 Alpha MW 100	Alpha SP 220 Alpha MW 220	
Elf	Reductelf SP 100	Reductelf SP 220 Reductelf Synthese 220	Reductelf SP 320
Esso	Spartan EP 100	Spartan EP 220	Spartan EP 320
Mobil	Mobilgear 627	Mobilgear SHC 220 Mobilgear 630	Mobilgear 632
ÖMV		PG 220	
Paramo	PP 7	Paramo CLP 220	Paramo CLP 320
Shell	Shell Omala 100	Shell Omala 220 Shell Tivela S 220	Shell Omala 320 Shell Tivela S 320
Total	Carter EP 100	Carter EP 220	Carter EP 320

4.6.2. Lubrication greases

For lubrication we recommend using lithium based class NGLI-2 saponified grease. Different greases are mixable, if their oil bases and density classes are identical.

Comparative table of the lubricant greases:

Manufacturer	Type of the lubricant grease
BP	Energrease LS - EP
DEA	Paragon EP1
Esso	FETT EGL 3144
	Beacon EP 1
	Beacon EP 2
FINA	FINA LICAL M12
Klüber	Microlube GB0
	Staburags NBU8EP
	Isoflex Spezial
Optimol	Optimol Longtime PD 0, PD1, PD2
Shell Aseol AG	ASEOL Litea EP 806-077
Texaco	Multifak EP1

4.6.3. Lubrication

There are several assemblies on the machine,that have to be lubricated to ensure the correct function of the machine.

Place for lubrication	Description
	The upper pivot of the lifting cylinder – drip oil once a week.

4.6.4. Hydraulic oils

Replace the hydraulic oil once every 2 years, because the oil properties can deteriorate and cause problems with the hydraulic equipment. If the hydraulic system is equipped with filter (2SF 56/48-0,063), replace the filter too.

Filling plug is located on top of the tank, drain hole is located at the bottom of the tank.

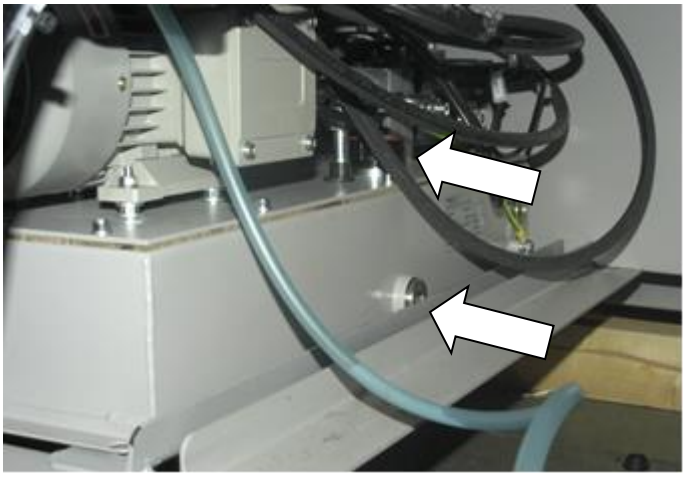

Use oils with specification DIN 51524-HLP, ISO 6743-4 and viscosity class ISO VG 32 in hydraulic aggregates. Hydraulic oils quantity – see chapter Hydraulic oil level check.

Note:
When replacing the oil, use oils recommended by BOMAR or oils, from other manufacturers which have comparable parameters. Do not forget, that mineral and synthetic oils must not be mixed!

Comparative table of the hydraulic oils:

Manufacturer	Type	Manufacturer	Type
Agip	Oso 32	Ina	Hidraol 32 HD
Aral	Vitam GF 32	Klüber	Lamora HLP 32
Avia	Avilub RSL 32	Hungary	Hidrokomol P 32
Benzina	OH-HM 32	Mobil	Mobil DTE 25
BP	Energol HLP 32	ÖMV	HLP 32
Bulgaria	MX-M/32	Poland	Hydrol 30
Castrol	Hyspin AWS 32	Rumania	H 32 EP
Čepro	Mogul HM 32	Russia	IGP 30
DEA	Astron HLP 4hy6	Shell	Tellus Oil 32
Elf	Elfolna 32	Sun	Sunvis 846 WR
Esso	Nuto H 32	Texaco	Rando HD B 32
Fam	HD 5040	Valvoline	Ultramax AW 32
Fina	Hydran 32		

4.6.5. Hydraulic unit service

After 50 hours working time, or the latest 3 month after the first run, the first service should be carried out. This includes:

- checking off all screws and connections, fixing points, tubes and hoses for leakage
- Check hydraulic oil level

  The oil level must be located between the two halves of the glasses

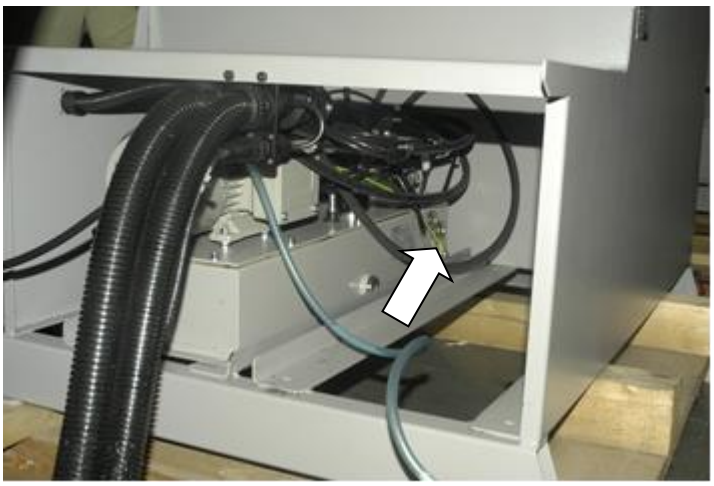

- During time of duty the oil temperature shouldn´t exceed 60-70°C
- check function of signaling components (thermometer, level gauge, dirty filter indicator)
- Check the adjustment of working pressure

To realise a high reliability of the power pack, the manufacturer lays down following inspection intervals

Interval	daily	weekly	monthly	three monthly	six monthly	annually
Hydraulic fluid						
Level	-	•	-	-	-	-
Temperature	-	•	-	-	-	-
Condition	-	-	•	-	-	-
Change interval	-	-	-	-	-	•
Filter						
Change interval	-	-	-	-	-	-
Other checks						
External Leakages	•	-	-	-	-	-
Contamination	•	-	-	-	-	-
Damages	•	•	-	-	-	-
Noise-(level)	•	-	-	-	-	-
Gauges	-	-	•	-	-	-

4.7. Machine cleaning

Clean the machine off cooling agent and impurities after every shift. Conserve the guiding surfaces, mainly.

- Guiding of the clamping jaws of the main and feeder vice.
- Guiding of the feeder.
- The loading surface of the main and feeder vice
- Thread rod of the main and feeder vice

4.8. Adjustment of the regulating pressure to the cut

Device for regulation of the pressure to the cut is primarily set by the manufacturer.

Do not manipulate with adjustment of the device if you do not have serious reason!

Adjustment procedure:

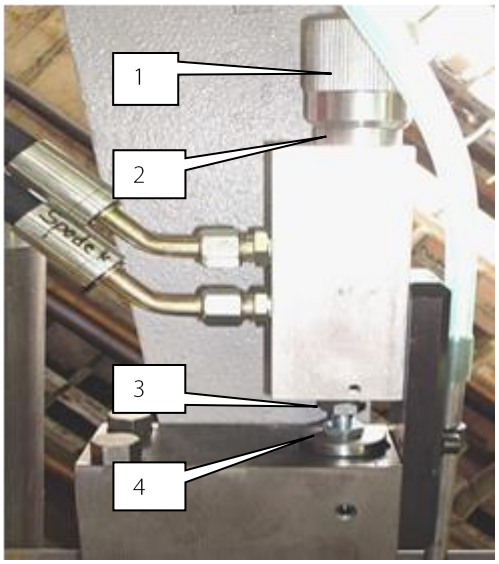

1. Set the body of the regulation by adjusting handle. It is under the handle. Set it on the second groove. There is visible one neck (pos. 1, 2).
2. Screw the stopper screw to the maximum, or the valve will be blocked (pos. 3)
3. Now the frame can be freely moved up only, because the saw frame movement is blocked with the governing valve
4. Press button „ saw frame down „ screw on the setscrew
5. Screw in the stop screw as long as you reach the optimal speed of the frame sinking
6. Optimal speed of the frame sinking is between 40-50 sec.from max.lift.
7. Secure the adjusting screw by means of the nut after reaching of the sinking speed
8. Switch on the engine of the drive and check speed of the saw frame sinking again

4.9. Worn pieces replacement

4.9.1. Hard metal guides replacement

If the hard metal guides cannot be adjusted, they have to be replaced.

1. Remove the hosepipe leading to the cooling agent and dismantle saw band and saw band guiding cube.

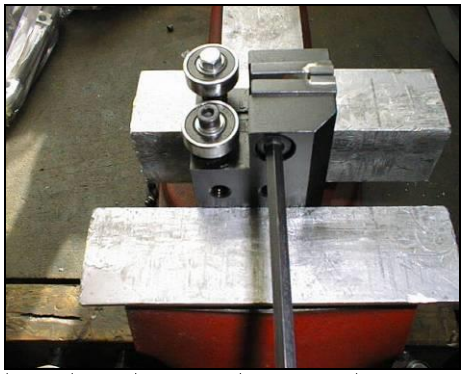

2. Fasten the guiding cube to the vice and screw out the screws of both the hard metal desks.

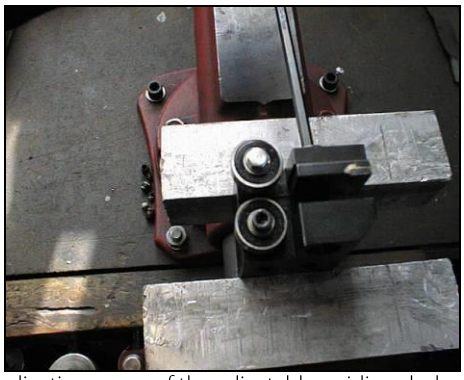

3. Screw out the adjusting screw of the adjustable guiding desk as far from the guide cube so that it is not possible to see it from the inner side.
4. Now insert new hard metal guides and fasten them tightly and fasten the guide cube to the gib.
5. Install the saw band and adjust guide cube and hard metal guides.

> ***Attention!***
> *Vice must has aluminum jaws or should be placed in a vice aluminum produc, that avoid damage to the pin during clamping.*

4.9.2. Saw band guiding rollers replacement

If the saw band is not sufficiently guided by guiding rollers and/or if the rollers are obviously worn, the rollers should be replaced.

Attention! Guiding rollers must be replaced together on both guide cubes!

1. Remove the hosepipe leading to the cooling agent and dismantle saw band and saw band guide cube.

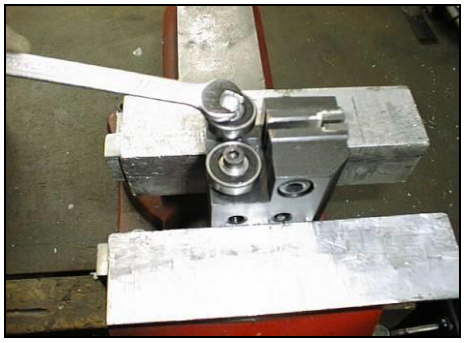

2. Grip the guide cube in the vice and screw out both fastening screws of the eccentrics.

3. Pull both guide rollers from their eccentrics.

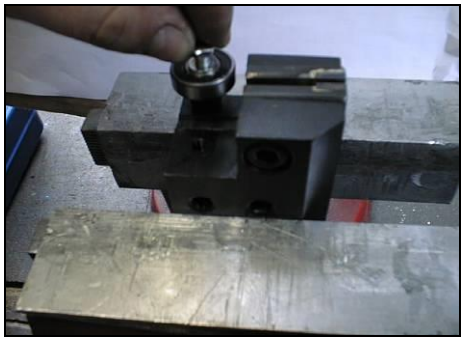

4. Put new guide rollers on the eccentrics and screw the eccentrics to the guide cube.

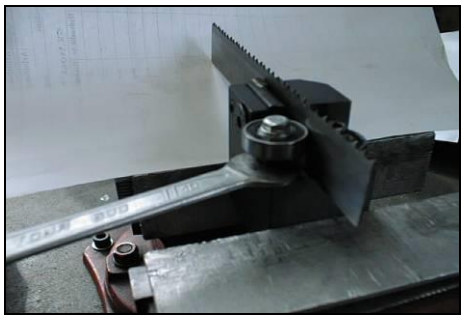

5. Now insert a test piece of saw band (cca 15 - 20 cm) into the guide cube. Adjust both eccentrics so that the band runs in the middle of milled groove. This groove is located between both eccentrics. Guide rollers may not press too much on the band, but they must spin freely.

Optimal distance between band and roller is 0,05mm.

6. Install the cube on the gib. Install the saw band and adjust guiding cubes.

Attention!
Vice must has aluminum jaws or should be placed in a vice aluminum produc, that avoid damage to the pin during clamping.

4.9.3. Worn brush replacement

If the chip removing brush is so worn, that it does not fulfill its function, it must be replaced.

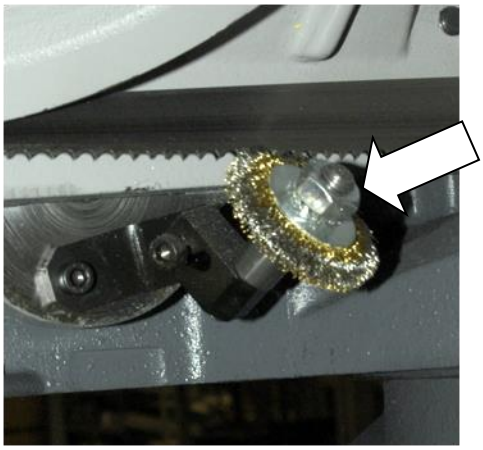

1. Release the nut of the brush, exchange the worn brush for a new one and screw the nut.
2. Set the brush to the saw band.

4.9.4. Stretching wheel replacement

1. Dismantle the saw band.

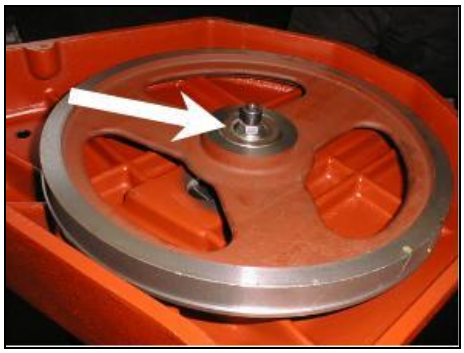

2. Screw off the stretching wheel screw and remove the washer.
3. Screw the auxiliary screw onto the shaft of the stretching wheel.

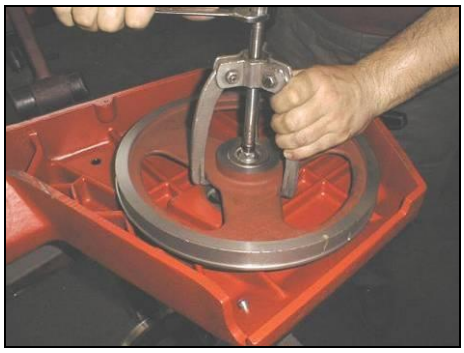

4. Put on the three-leg puller on the stretching wheel and pull off it from the shaft.

5. If the lower bearing stays on the shaft, pull of it from the shaft with a two-leg puller. Check both bearings; eventually replace them for new ones.

6. Insert the retaining ring into the hole of the new stretching wheel.

7. Insert a bearing into the hole in the wheel and push it to the retaining ring.

8. Clean the shaft and oil it. Install the new stretching wheel on the shaft.

9. Install the distance ring on the shaft and push it to the lower bearing.

10. Install second bearing on the shaft and push it to the distance ring.

11. Install the washer and screw on the stretching wheel.
12. Install the saw band. Wheel replacement is done.

4.9.5. Driving wheel replacement

1. Dismantle the saw band.

2. Screw of the fastening screw of the driving wheel and pull off the washer.
3. Screw on the auxiliary screw to the driving shaft.

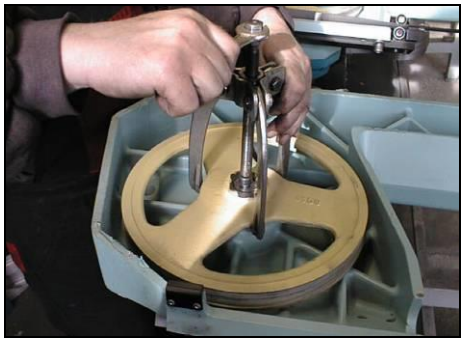

4. Install the three-leg puller on the driving wheel and pull off it from the shaft.

5. Check, if the spring and the driving shaft are not damaged. Contact your supplier for parts replacement.

6. If the shaft and the feather are in good order, clean them, oil them and install them on the driving shaft.

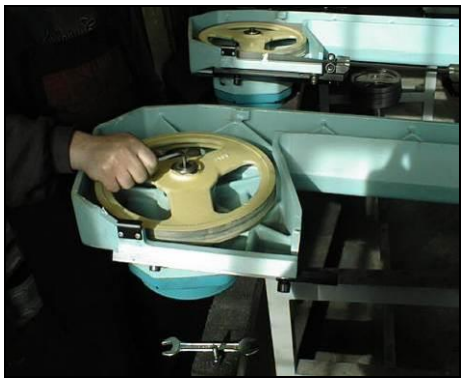

7. Install the washer and screw on the driving wheel.
8. Install the saw band.

4.9.6. Cooling pump replacement

Warning!
Only a qualified technician can perform the installation!
Electrical accidents can be fatal!

1. Disconnect the machine from electrical network.
2. Pull out the tank from the pedestal as far as possible.

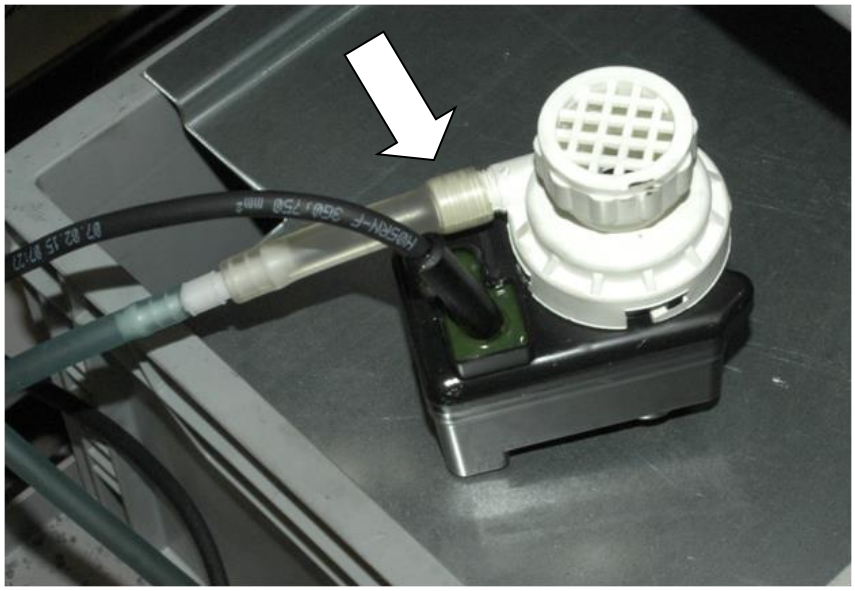

3. Pull out the cooling pump from the tank and disconnect the hose for the coolant distribution from the pump.

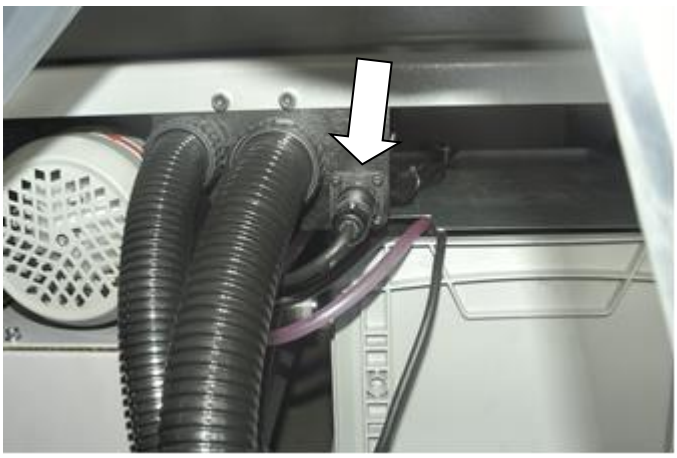

4. Disconnect the supply cable of the pump from the connector.
5. Complete the replacement by following these steps in reversed order.

5. Závady / Troubleshooting / Störungen

5.1. Mechanical problems

Problem	Possible causes	Repair
9. Slanting cut	Wrongly adjusted hard metal guides	Set according to the chapter „Machine maintenance“
	Worn hard metal guides	Replace according to the chapter „Worn pieces replacement“
	Wrongly adjusted cubes of the saw band guiding	Set according to the chapter „Machine maintenance“
	Worn bearings of the saw band guiding	Replace according to the chapter „Worn pieces replacement“
	Wrongly adjusted swarf brush	Set according to the chapter „Machine maintenance“
	Worn swarf brush	Replace according to the chapter „Worn pieces replacement“
	Insufficient saw band stretching	Increase the saw band stretching and set the limit switch
	Wrongly chosen tooth system of the saw band	Replace the saw band; follow the instructions of the manufacturer for new saw band choice
	Worn saw band	Replace the saw band
	Wrongly leveled roller conveyor	Adjust the roller conveyor
	Dirty feeding board	Cleanse the feeding board from debris, chip and residue material
	Guiding rail and guiding cube are loosened	Tighten the guiding rail
	Guiding rail and cube are too far from the material	Set the guiding cube to the material
	Too fast rate of movement into the cut	Lower the material speed of descent of the arm
	Unexpected oscillation in material quality	Adjust the cutting parameters and feeding speed according to the material
10. The cut is not cut upon desired angle	Set angle does not match the cutting angle	Check the angle adjustment with a protractor and if need be adjust it according to chapter „Machine maintenance“
	Insufficient saw band stretching	Stretch the saw band and set the limit switch according to chapter „Machine maintenance“
	Guiding cube holder and guiding cube are loosened	Fasten the guiding holder and the cube

Problem	Possible causes	Repair
	Dirt between material and clamping jaw	Cleanse the material and mating jaw
11. Short lifetime of the saw band	Insufficient saw band stretching	Increase the tightening of the saw band and set the sensor of saw band tightening according to chapter „Machine maintenance“
	Worn swarf brush	Check the swarf brush condition and replace it in case of excessive wear as described in chapter „Worn pieces replacement“
	Wrongly adjusted swarf brush	Check swarf brush adjustment, set it according to chapter „Machine maintenance“
	Overly stretched saw band	Lower the stretching of the saw band and set the limit switch of the saw band stretching according to chapter „Machine maintenance“
	Wrongly adjusted hard metal guides	Check the adjustment of the hard metal guides and carry out adjustment as described in chapter „Machine maintenance“
	Worn hard metal guides of the saw band	Check the condition of the hard metal guides and if they are too worn, replace hard metal guides according to chapter „Worn pieces replacement“
	Worn saw band guide bearings	Check the guiding bearings and if you notice any excessive damage, replace them according to chapter „Worn pieces replacement“
	Wrongly adjusted guiding cubes of the saw band	Set the guiding cube according to chapter „Machine maintenance“
	Wrongly adjusted speed of descent of the arm and saw band speed	Adjust the descending speed and speed of the saw band according to values published by the saw band manufacturer
	Different material quality	Adjust the speed of descent and speed of the saw band according to desired material (perform a test cut)
	Low quality saw band	Replace the saw band (contact your local accessory supplier for more information)
	Wrongly chosen saw band tooth system	Replace the saw band, keep to the instructions of the manufacturer

Problem	Possible causes	Repair
	Wrongly adjusted run of the saw band	Check the space between the top of the saw band and driving wheel Adjust the tracking as described in chapter „Machine maintenance“ if need be
12. Insufficient cut output	Worn saw band	Replace the saw band, keep to the instructions of the manufacturer
	Wrong saw band tooth system	Replace the saw band, keep to the instructions of the manufacturer
	Wrongly adjusted speed of descent of the arm and saw band speed	Adjust the descending speed and speed of the saw band according to values published by the saw band manufacturer
13. The cut is not finished	Wrongly adjusted lower stop of the saw frame	Check the stop setting and adjust it
	Stop surface is messy	Cleanse the stop surface of the limit switch of debris and residue material
14. Regulation valve cannot be turned	There are metal chips inside the valve	Valve must be cleaned or changed
	Metal chips between the valve and the panel	Chips must be removed, then put an O Ring ø 10x2 mm onto the throttle valve shaft
15. Saw band drive cannot be started	Pressure switch is wrongly adjusted	Set the pressure switch according to chapter „Machine maintenance“
	Pressure switch is defective	Replace defective parts of the pressure switch
16. Saw bands tend to rupture	Wrongly adjusted band guiding (hard metal and bearings)	Hard metal pieces and bearings must be adjusted according to „Machine maintenance“
	Bearings of guiding cubes are worn out (rolling elements are damaged or outside ring of bearing has conical form)	Bearings of guiding cubes must be replaced Bearings must be adjusted according to operating instructions
	Wrong adjusted geometry of the stretching wheel	Adjust the distance of the saw band to approx. 2 mm according to the operating instructions
	Looseness in the lifting cylinder mounting	
	Worn out pin of the upper or bottom holder of the lifting cylinder	Exchange the upper or bottom holder of the lifting cylinder
17. Damage tooth system of the saw band	Geometry of hard metal guiding cubes is wrongly adjusted	Hard metal guiding cubes must be adjusted
	Bearings of guiding cubes are worn out	Bearings of guiding cubes must

Problem	Possible causes	Repair
		be replaced
18. The saw is undercutting	Grooving on the driving wheel is worn out	Driving wheel must be replaced
19. Cleansing of the saw band is not functional	The shaft of the brush drive is rusted	The shaft of the brush must be cleaned and oiled
	The brush position and the brush cover is adjusted incorrectly – the cover prevents the brush from turning	The brush cover must be repositioned, in order for the brush to be able to turn
	Plastic wheel of the brush drive is worn out	Elastic wheel of the brush must be replaced
20. The saw arm periodically rises and descends a few millimeters during the cut; this shortens the lifetime of the saw band considerably	Backslash in driving wheel mounting on the shaft	Replace following parts: the driving shaft for a longer one, bearings, distance ring, driving wheel, spring, two covers on the forehead of the shaft + screws
	Worn channel for spring	

5.2. Electric problems

Problem	Possible causes	Repair
21. Machine is not possible to start	No voltage in the socket	Line voltage must be checked
	Overload relay is defective (thermal protection)	Each FA overload relay's condition (on/off) must be checked
	Limit switch of either saw band stretching, band cover or saw arm is not closed	Check the saw band stretching and covers
22. When the cut is finished, the frame is not raised	Bottom limit switch is adjusted wrongly	Bottom limit switch must be adjusted according to chapter ADJUSTING
	A malfunction in the hydraulic (pneumatic) system The HYTOS (BOSCH) magnetic valve is not working	Function of magnetic valve must be checked, valve must be switched on, and voltage across its terminals and coil must be checked
23. Electric motor and pump are without voltage There is no voltage between the contactor and thermal protection	Wrong contactor	Replace the contactor of the engine
24. The speed indicator of	Sensor of speed is not adjusted	Sensor of speed must be adjusted

Problem	Possible causes	Repair
the saw band is not functional	Defective display	The display must be replaced
	Defective sensor – diode of indicator speed does not light	Sensor must be changed and adjusted
25. Occasional switching off of the hydraulic aggregate MA3 engine protection	Too big working pressure in the hydraulic system	Service engineer must reduce the pressure in hydraulic system
26. Hydraulic aggregate is switched on but the saw arm or the main vice can't be moved	Wrong connection of electrical supply The electrical phases are connected conversely	The phases must be switched Only service engineer is allowed to do this
27. Cooling is not active	Lack of cooling agent	Refill the tank with cooling agent
	Thermal relay is defective	Replace the thermal relay
	Input hosepipe is broken or clogged	Check the cooling circuit and eventually cleanse the cooling system
	Cooling pump protection is defective	Check the protection of the cooling pump and change it if need be
	Cooling pump is defective	Replace the cooling pump

5.3. Hydraulic problems

Problem	Possible causes	Repair
28. Hydro generator is not supplying oil	Reversed rotation	Check the correct connection of each phase Reconnect the electrical phases properly
	Shortage of oil in the tank	Add hydraulic oil
	Oil viscosity does not correspond to the prescribed viscosity value	Change hydraulic oil
	Hydro generator malfunction	Call service
	Wrong power supply connection	Check the correct connection of each phase Reconnect the electrical phases properly
29. Hydraulic oil contains bubbles	Hydraulic circuit is not adequately bled	Bleed the hydraulic circuit
	Low level of oil	Add hydraulic oil
	The hydro generator gasket is damaged	Call service
30. Increased mechanical noise	Damaged clutch of the drive	Call service
	Damaged or destroyed motor bearings	Call service
	Air intake	Check for leaks
31. Low pressure, pump supplies oil	Failure on the safety valve	Wrong settings Check the settings and adjust the safety valve
	Wear of the hydro generator	Call service
	External or internal leakages	Call service
32. Hydro generator is seized	Damage by solid particles in oil	Perform oil filtration or call the service
	Not keeping the prescribed viscosity of oil	Change hydraulic oil
	Wrong type of oil	Change hydraulic oil
	Exceeded lifespan of the pump	Call service
33. Overheating oil	Cooler malfunction	Check the cooler function or call service
	Wear of the pump, energy is converted into heat	Call service
34. Hydraulic valve cannot be readjusted	Electromagnet has no signal (voltage) broken supply lines	Perform recheck
	Electromagnet coil burnt	Replace coil – Call service

Problem	Possible causes	Repair
	The slider of the switchboard slackens	Replace slider – Call service

Note:

Frequency Inverter
Do install the bandsaw machine at electrical Installation that corresponds recommended technical standards. We recommend to protect the machine using current protectores by characteristics U, able to compansate interchanges of rising current which escapes fromfilter of Frequency Inverter, so that additionalequipments tot he machine will not be required than. We don't reccomend to protect a machine by a standard protector current, equipped by a smaller type under 100 mA. Standard used is 30 mA because of currnet escape in accordance of Frequency Inverters fitted on machine. Alternative soulutionshould be used currentprotector (FI) by sensitivity of 100 mA.

6. Schémata / Schemas / Schematics

6.1. Elektrická schémata / Elektroschemas / Wiring diagrams

Obsah / Table of contents / Inhalt

Strana Page Seite	Název strany Page name Seitenname	Datum Date Datum
/1	Úvodní strana / Start page / Startseite	18.01.2019
/2	Obsah / Table of contents / Inhaltsverzeichnis	18.01.2019
/3	Kusovník artiklů / Parts list / Artikelstückliste	17.12.2018
/3.a	Kusovník artiklů / Parts list / Artikelstückliste	17.12.2018
/3.b	Kusovník artiklů / Parts list / Artikelstückliste	17.12.2018
/3.c	Kusovník artiklů / Parts list / Artikelstückliste	17.12.2018
/3.d	Kusovník artiklů / Parts list / Artikelstückliste	17.12.2018
/3.e	Kusovník artiklů / Parts list / Artikelstückliste	17.12.2018
/4	Rozmístění prvků v rozvaděči R1 / Placement of elements in enclosure R1 / Platzierung der Elemente im Schaltschrank R1	17.12.2018
/5	Ovládací panel OP1 / Control panel OP1 / Bedienpult OP1	17.12.2018
/6	Silová část / Power part / Feld partie	17.12.2018
/7	Připojení motorů / Motors conection / Anschluss Motor	17.12.2018
/8	Tlačítka / Buttons / Tasten	17.12.2018
/9	Ovládací část / Control device / Steuereinheit	17.12.2018
/10	Hydraulika / Hydraulics / Hydraulik	17.12.2018
/11	Výška ramene / Arm height / Schulterhöhe	17.12.2018
/12	Bezpečnostní obvod / Safety circuit / Sicherheitsschaltung	17.12.2018
/13	Řídící systém / Control system / Steuersystem	17.12.2018
/14	Příslušenství / Accessories / Zubehör	17.12.2018
/15	SyncFree / SyncFree / SyncFree	17.12.2018

Kusovník artiklů / Parts list / Stückliste

Označení přístroje Device identification Geräteidentifikation	Typ přístroje Device description Gerätebeschreibung	Objednací číslo Type number Typennummer	Výrobce Manufacturer Hersteller	Skladové číslo Part number Lagernummer	Množství Quantity Menge	Umístění Location Stelle
-BM1	Bezpečnostní relé 24VDC, 3NO Safety relay 24VDC, 3NO Sicherheitsrelais 24VDC, 3NO	BT50	ABB	91.051.063	1	/12.6
-CU1	Řídící systém SMA 3.X Control unit SMA 3.X Die Steuereinheit SMA 3.X	SMA 3.X	BOMAR s.r.o.	91.995.222	1	/13.0
-SN1	Odměřovaní polohy Position measuring Positionsmessung	DH-RAM	Bomar	262.012	1	/11.5
-SA1	Hlavice s otočným přepínačem - 4 polohy Head with rotary switch - 4 positions Kopf mit Drehschalter - 4 Positionen	M22 - WRK4	EATON	91.060.087	1	/8.6
-FU1	Pojistka trubičková - 2A/400V, pomalá, 5x20 Tube fuse - 2A/400V, slow, 5x20 Rohrsicherung - 2A / 400V, langsam, 5x20	T2A/400V	ESKA	91.230.073	1	/6.4
-FU2	Pojistka trubičková - 2A/400V, pomalá, 5x20 Tube fuse - 2A/400V, slow, 5x20 Rohrsicherung - 2A / 400V, langsam, 5x20	T2A/400V	ESKA	91.230.073	1	/6.4
-FU3	Pojistka trubičková - 4A/250V, pomalá, 5x20 Tube fuse - 4A/250V, slow, 5x20 Rohrsicherung - 4A / 250V, langsam, 5x20	T4A/250V	ESKA	91.230.015	1	/6.8
-RP1	Potenciometr 4k7 Potenciometer 4k7 Potentiometer 4k7	TP195 4k7/N20A	Elektronické součástky CZ, a.s	91.283.015	1	/7.8
-RP2	Potenciometr 4k7 Potenciometer 4k7 Potentiometer 4k7	TP195 4k7/N20A	Elektronické součástky CZ, a.s	91.283.015	1	/11.5
-RP1	Hlavice potenciometru - 24mm Head of potentiometer 24mm Leiter Potentiometer 24mm	S8877 BLK	GES-ELECTRONICS, a.s.	91.060.063	1	/7.8
-RP2	Hlavice potenciometru - 24mm Head of potentiometer 24mm Leiter Potentiometer 24mm	S8877 BLK	GES-ELECTRONICS, a.s.	91.060.063	1	/11.5
-CU1-D1	Dioda 800V 3A Diode 800V 3A Diode 800V 3A	BY399 DO201	GM-electronics	91.280.009	1	/13.7

The manufacturer reserves right to use an equivalent replacement device.

2

Kusovník artiklů / Parts list / Stückliste

Označení přístroje Device identification Geräteidentifikation	Typ přístroje Device description Gerätebeschreibung	Objednací číslo Type number Typennummer	Výrobce Manufacturer Hersteller	Skladové číslo Part number Lagernummer	Množství Quantity Menge	Umístění Location Stelle
-D3	Dioda 800V 3A Diode 800V 3A Diode 800V 3A	BY399 DO201	GM-electronics	91.280.009	1	/8.5
-D4	Dioda 800V 3A Diode 800V 3A Diode 800V 3A	BY399 DO201	GM-electronics	91.280.009	1	/8.5
-+OP1	Nálepka ovládacího panelu Sticker control panel Aufkleber Bedienfeld	31.ER2530-604	ING. MILAN VRÁNA	31.ER2530-604	1	/5.1
-RCF2	Filtr RFC vývodový Efferent RFC filter Ableitenden RFC Filter	FBOPR1624	Ing. Miroslav Vlček	91.041.015	1	/7.2
-RCF11	Filtr RFC vývodový Efferent RFC filter Ableitenden RFC Filter	FBOPR1624	Ing. Miroslav Vlček	91.041.015	1	/6.5
-RCF12	Filtr RFC vývodový Efferent RFC filter Ableitenden RFC Filter	FBOPR1624	Ing. Miroslav Vlček	91.041.015	1	/6.7
-FA1	Tepelné relé - 1A Thermal relay - 1A Thermorelais - 1A	T16-1,0	ABB	91.050.022	1	/7.3
-FU1	Svorka pojistková Fuse terminal Sicherungsklemme	WK4/THSi5U	WIELAND	91.251.102	1	/6.4
-FU2	Svorka pojistková Fuse terminal Sicherungsklemme	WK4/THSi5U	WIELAND	91.251.102	1	/6.4
-FU3	Svorka pojistková Fuse terminal Sicherungsklemme	WK4/THSi5U	WIELAND	91.251.102	1	/6.8
-FU4	Svorka pojistková Fuse terminal Sicherungsklemme	WK4/THSi5U	WIELAND	91.251.102	1	/7.1
-FU4	Pojistka trubičková - 700mA/250V, pomalá, 5x20 Tube fuse - 700mA/250V, slow, 5x20 Rohrsicherung - 700mA / 250V, langsam, 5x20	T700mA/250V	ESKA	91.230.069	1	/7.1

The manufacturer reserves right to use an equivalent replacement device.

3

Kusovník artiklů / Parts list / Stückliste

Označení přístroje Device identification Geräteidentifikation	Typ přístroje Device description Gerätebeschreibung	Objednací číslo Type number Typennummer	Výrobce Manufacturer Hersteller	Skladové číslo Part number Lagernummer	Množství Quantity Menge	Umístění Location Stelle
-FU5	Svorka pojistková Fuse terminal Sicherungsklemme	WK4/THSi5U	WIELAND	91.251.102	1	/7.1
-FU5	Pojistka trubičková - 700mA/250V, pomalá, 5x20 Tube fuse - 700mA/250V, slow, 5x20 Rohrsicherung - 700mA / 250V, langsam, 5x20	T700mA/250V	ESKA	91.230.069	1	/7.1
-HL1	Signálka LED bílá na adaptér White LED light for adapter Weißes LED-Licht für Adapter	M22-LED-W	EATON	91.061.034	1	/12.6
-KM1	Ministykač - 4kW/400V, 3P Mini contactor - 4kW/400V, 3P Mini-Schütz - 4kW/400V, 3P	B6S-30-10-1.7-71	ABB	91.040.048	1	/9.5
-KM11	Ministykač 4kW/400V Minicontactor 4kW/400V Minischutz 4kW/400V	B6S-30-01-1.7-71	ABB	91.040.049	1	/12.7
-KM12	Ministykač 4kW/400V Minicontactor 4kW/400V Minischutz 4kW/400V	B6S-30-01-1.7-71	ABB	91.040.049	1	/12.8
-LP1	Signálka LED červená na adaptér Red LED light for adapter Red LED-Licht für Adapter	M22-LED-R	EATON	91.061.027	1	/9.4
-PA1	Pojistkový odpínač pro válcové vložky - 3P Switch fuse for the cylinder inserts - 3P Schalter Sicherung für den Zylindereinsätze - 3P	E 93/32	ABB	91.241.014	1	/7.4
-RE1	Paticové relé CR-P Plug-in relay CR-P Stecken Sie in Relais CR-P	CR-P024DC2	ABB	91.051.049	1	/9.7
-RE1	Patice pro relé Relay socket Relaissockel	CR-PSS	ABB	91.051.048	1	/9.7
-RE2	Paticové relé CR-P Plug-in relay CR-P Stecken Sie in Relais CR-P	CR-P024DC2	ABB	91.051.049	1	/9.6
-RE2	Patice pro relé Relay socket Relaissockel	CR-PSS	ABB	91.051.048	1	/9.6

The manufacturer reserves right to use an equivalent replacement device.

3.a

Kusovník artiklů / Parts list / Stückliste

Označení přístroje Device identification Geräteidentifikation	Typ přístroje Device description Gerätebeschreibung	Objednací číslo Type number Typennummer	Výrobce Manufacturer Hersteller	Skladové číslo Part number Lagernummer	Množství Quantity Menge	Umístění Location Stelle
-RP1	Svorka rychloupínací Fastconnect clamp Fast Connect Klemm	WAGO 224-112	WAGO	91.250.009	3	/7.8
-RP2	Svorka rychloupínací Fastconnect clamp Fast Connect Klemm	WAGO 224-112	WAGO	91.250.009	3	/11.5
-SA1	Kontaktní blok - 1NC Contact block - 1NC Kontaktblock - 1NC	M22-K01	EATON	91.061.024	1	/7.6
-SA1	Upevňovací adaptér Mounting adapter Montageadapter	M22-A4	EATON	91.061.045	1	/8.6
-SA1	Kontaktní blok - 1NO Contact block - 1NO Kontaktblock - 1NO	M22-K10	EATON	91.061.022	3	/8.6
-SB1	Kontaktní blok - 1NO Contact block - 1NO Kontaktblock - 1NO	M22-K10	EATON	91.061.022	1	/8.1
-SB2	Hlavice dvoutlačítka bílá/černá start/stop Double button head white/black start/stop Doppelrundkopf weiß/schwarz Start/Stopp	M22-DDL-WS-GB1/GB0	EATON	91.060.034	1	/8.2
-SB2	Upevňovací adaptér + 1NO Attaching adapter + 1NO Montageadapter + 1NO	M22-AK10	EATON	91.061.021	1	/8.2
-SB3	Upevňovací adaptér + 1NO Attaching adapter + 1NO Montageadapter + 1NO	M22-AK10	EATON	91.061.021	1	/8.4
-SB3	Hlavice tlačítka - černá Head button - black Kopftaste - schwarz	M22-D-S	EATON	91.060.035	1	/8.4
-SB3	Kontaktní blok - 1NO Contact block - 1NO Kontaktblock - 1NO	M22-K10	EATON	91.061.022	3	/8.4
-SB4	Upevňovací adaptér + 1NO Attaching adapter + 1NO Montageadapter + 1NO	M22-AK10	EATON	91.061.021	1	/12.7

The manufacturer reserves right to use an equivalent replacement device.

3.b

Kusovník artiklů / Parts list / Stückliste

Označení přístroje Device identification Geräteidentifikation	Typ přístroje Device description Gerätebeschreibung	Objednací číslo Type number Typennummer	Výrobce Manufacturer Hersteller	Skladové číslo Part number Lagernummer	Množství Quantity Menge	Umístění Location Stelle
-SB4	Hlavice prosvětleného tlačítka žlutá Yellow trasparent switch Leiter beleuchtet gelbe Taste	M22-DL-Y	EATON	91.060.053	1	/12.7
-SB500	Total stop - hlavice + 2xNC Emergency-stop - button + 2xNC Not-Aus-Pilz - Taster + 2xNC	YW1B-V4E02R	IDEC	91.060.084	1	/12.4
-SB500	Kontakt - 1x NO Contact - 1x NO Kontakt - 1x NO	YW-E10	IDEC	91.061.044	1	/8.3
-TR1	Toroidní transformátor - 400V/230V/20V 3,5A 185VA Toroidal transformer - 400V / 230V / 20V 3.5A 185 VA Ringkerntransformator - 400V / 230V / 20V 3.5A 185 VA	400V/230V/20V 3,5A 185VA	KARBAN s.r.o.	91.080.041	1	/6.6
-SQ3	Bezpečnostní koncový spínač - 2xNC Safety Limit Switch - 2x NC Sicherheitsendschalter - 2x NC	QKS8	KEDU	91.173.012	1	/12.4
-PA1	Pojistka válcová - 6A, 10x38, rychlá Tube fuse - 6A, 10x38, fast Rohrsicherung - 6A, 10x38, schnell	PV10 6A gG	OEZ	91.231.002	3	/7.4
-SQ1	Koncový spínač - 1NC+1NO Limit switch - 1NC+1NO Endschalter - 1NC+1NO	D4N-4A31	OMRON	91.173.007	1	/9.1
-SQ2	Koncový spínač - 1NC+1NO Limit switch - 1NC+1NO Endschalter - 1NC+1NO	D4N-4A31	OMRON	91.173.007	1	/9.3
-QS1	3 pólový odpínač, 16A Disconnector - 3P, 16A Trennschalter - 3P, 16A	SAP16-03-M1	SALZER YUEQING LEYI	91.170.028	1	/6.1
-M1	Čerpadlo chlazení 50W Cooling pump 50W Kühlpumpe 50W	PA70-M	SAP srl	91.020.035	1	/7.1
-M3	Asynchronní motor 1.5kW, 4P, 3x230/400V Asynchronous motor 1.5kW, 4P, 3x230/400V Asynchronmotor 1.5kW, 4P, 3x230/400V	TM2 90 4L B14-C140	SITI S.P.A.	91.001.217	1	/7.4

The manufacturer reserves right to use an equivalent replacement device.

3.c

Kusovník artiklů / Parts list / Stückliste

Označení přístroje Device identification Geräteidentifikation	Typ přístroje Device description Gerätebeschreibung	Objednací číslo Type number Typennummer	Výrobce Manufacturer Hersteller	Skladové číslo Part number Lagernummer	Množství Quantity Menge	Umístění Location Stelle
-FM1	Frekvenční měnič - 1.5kW, 3x400VAC Frequency converter - 1.5kW, 3x400VAC Frequenzumrichter - 1,5kW, 3x400VAC	VFD015EL43A	DELTA ELECTRONICS, INC.	91.012.122	1	/7.4

The manufacturer reserves right to use an equivalent replacement device.

3.d

BOMAR, s.r.o. Těžební 1236/1 CZ 627 00, Brno	Stroj/Machine/Maschine: Ergonomic 320.258 DGH	Název stránky/Name page/Name seiten: Kusovník artiklů / Parts list / Artikelstückliste	Číslo dok./Doc.No/Anzahl der Dokumente.:	ES-101.163-201/202-V4.2	List/Page/Seite: 3.e
			Napájení/Power supply/Einspeinsung:	3x400V + PE, 50 Hz	
			Zpracoval/Processed /Hat verarbeitet:		Listů/Pages/Seiten: 20
			Datum/Date/Datum:	17.12.2018	

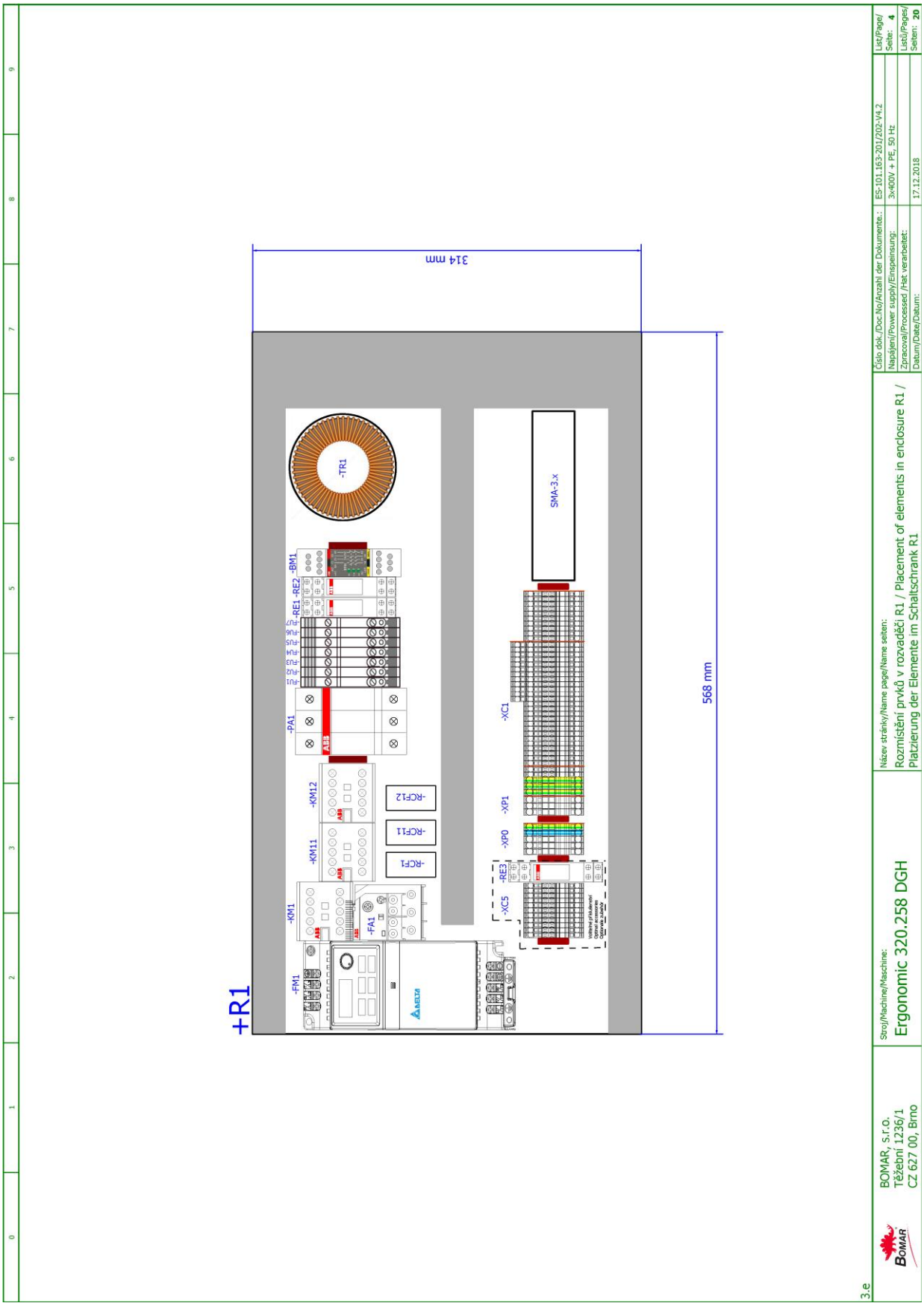
+R1
-FM1
-KM1
-FA1
-KM11
-KM12
-RCF1
-RCF11
-RCF12
-PA1
-RE1
-RE2
-BM1
-TR1
-XC5
-RE3
-XP0
-XP1
-XC1
SMA-3.x
314 mm
568 mm
Číslo dok./Doc.No/Anzahl der Dokumente.: ES-101.163-201/202-V4.2
Napájení/Power supply/Einspeisung: 3x400V + PE, 50 Hz
Zpracoval/Processed /Hat verarbeitet:
Datum/Date/Datum: 17.12.2018
List/Page/ Seite: 4
Listů/Pages/ Seiten: 20
Název stránky/Name page/Name seiten:
Rozmístění prvků v rozvaděči R1 / Placement of elements in enclosure R1 / Platzierung der Elemente im Schaltschrank R1
Stroj/Machine/Maschine:
Ergonomic 320.258 DGH
BOMAR, s.r.o.
Těžební 1236/1
CZ 627 00, Brno
3.e

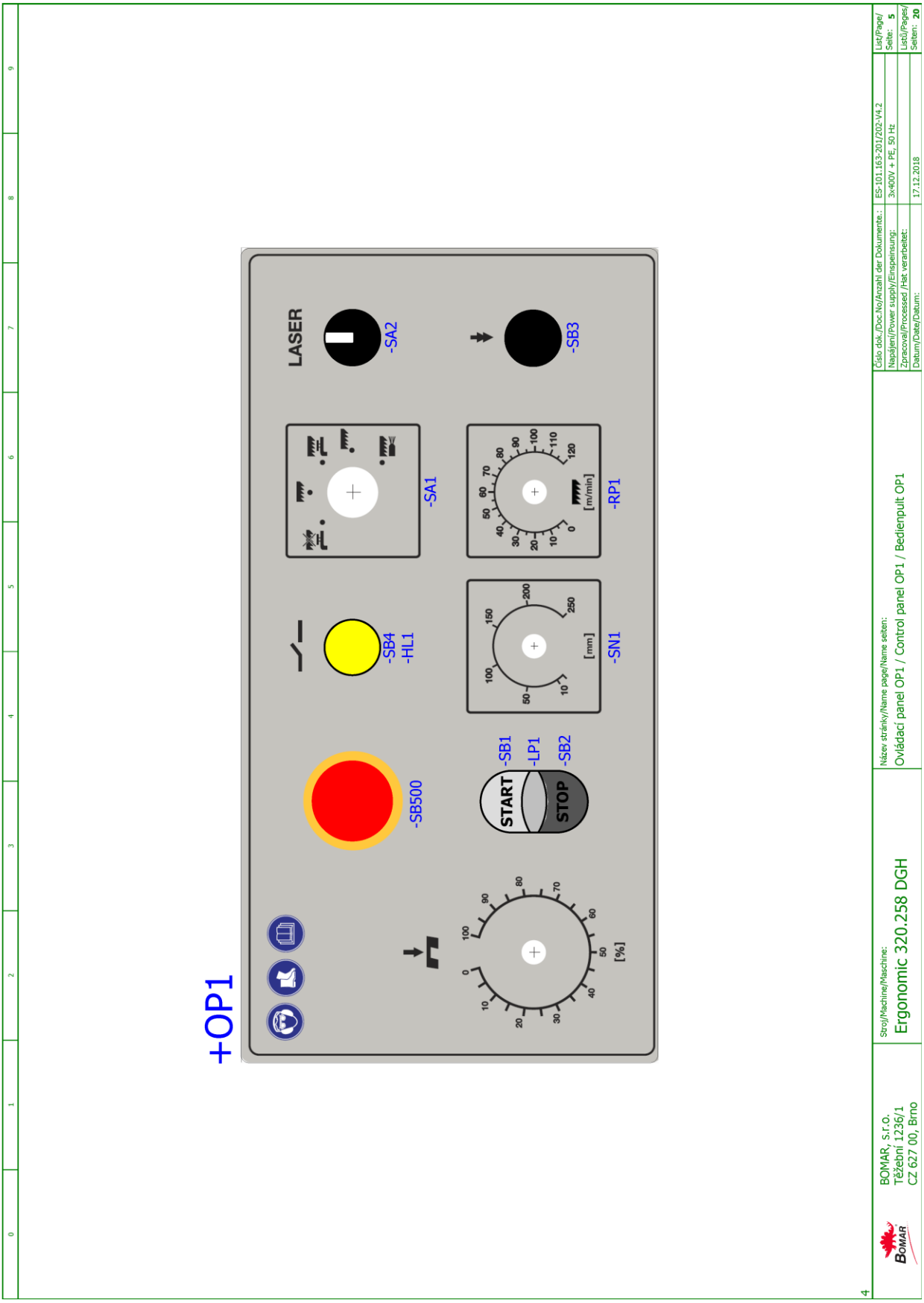
+OP1
LASER
-SA2
-SB3
-SA1
-RP1
[m/min]
-SB4
-HL1
-SN1
[mm]
-SB500
-SB1
-LP1
-SB2
START
STOP
[%]
BOMAR, s.r.o.
Těžební 1236/1
CZ 627 00, Brno
Stroj/Machine/Maschine:
Ergonomic 320.258 DGH
Název stránky/Name page/Name seiten:
Ovládací panel OP1 / Control panel OP1 / Bedienpult OP1
Číslo dok./Doc.No/Anzahl der Dokumente.:
ES-101.163-201/202-V4.2
Napájení/Power supply/Einspeinsung:
3x400V + PE, 50 Hz
Zpracoval/Processed /Hat verarbeitet:
Datum/Date/Datum:
17.12.2018
List/Page/
Seite: 5
Listů/Pages/
Seiten: 20

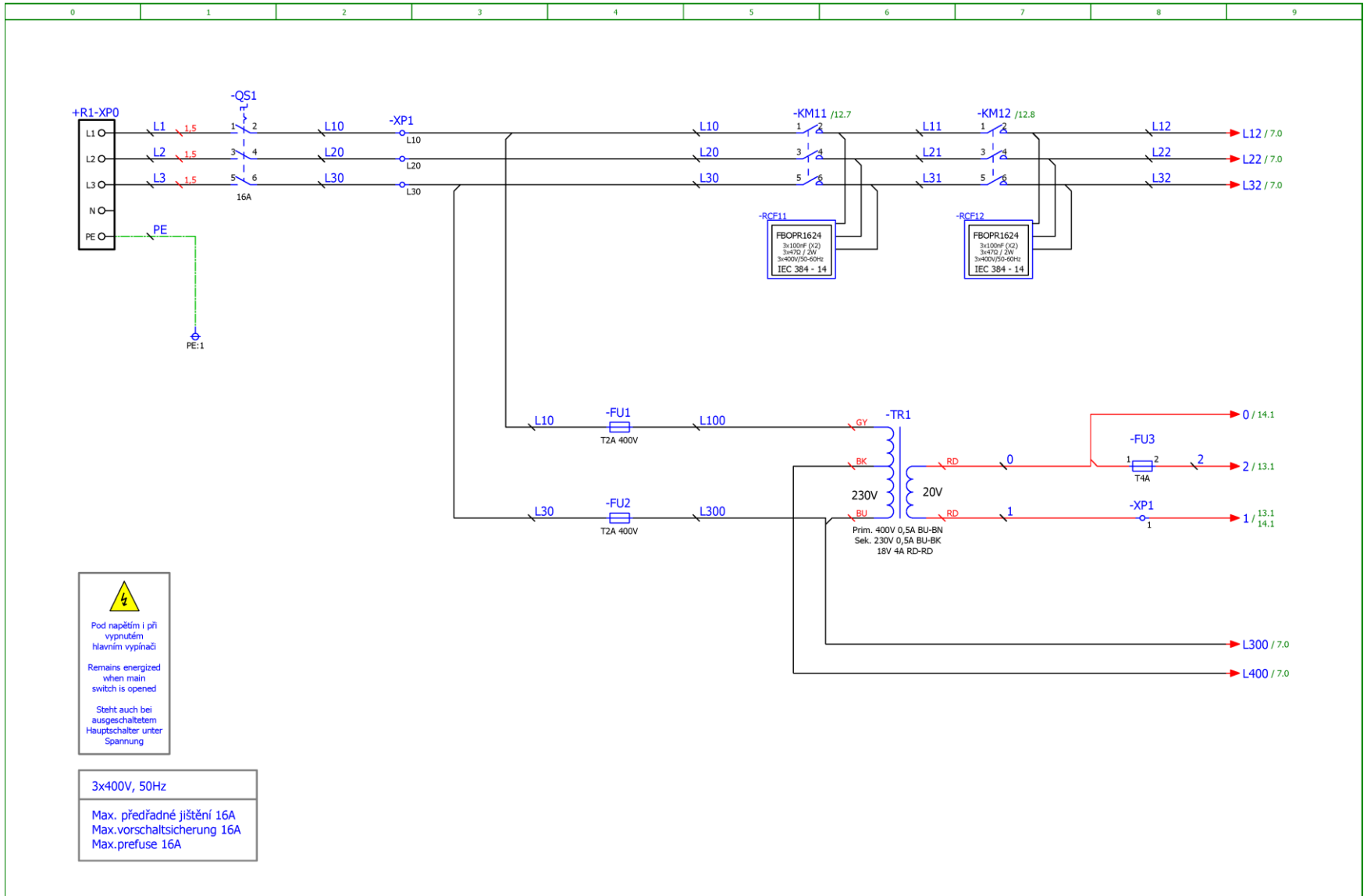

5

BOMAR, s.r.o. Těžební 1236/1 CZ 627 00, Brno	Stroj/Machine/Maschine: Ergonomic 320.258 DGH	Název stránky/Name page/Name seiten: Silová část / Power part / Feld partie	Číslo dok./Doc.No/Anzahl der Dokumente.: ES-101.163-201/202-V4.2	List/Page/Seite: 6
			Napájení/Power supply/Einspeisung: 3x400V + PE, 50 Hz	
			Zpracoval/Processed /Hat verarbeitet:	Listů/Pages/Seiten: 20
			Datum/Date/Datum: 17.12.2018	

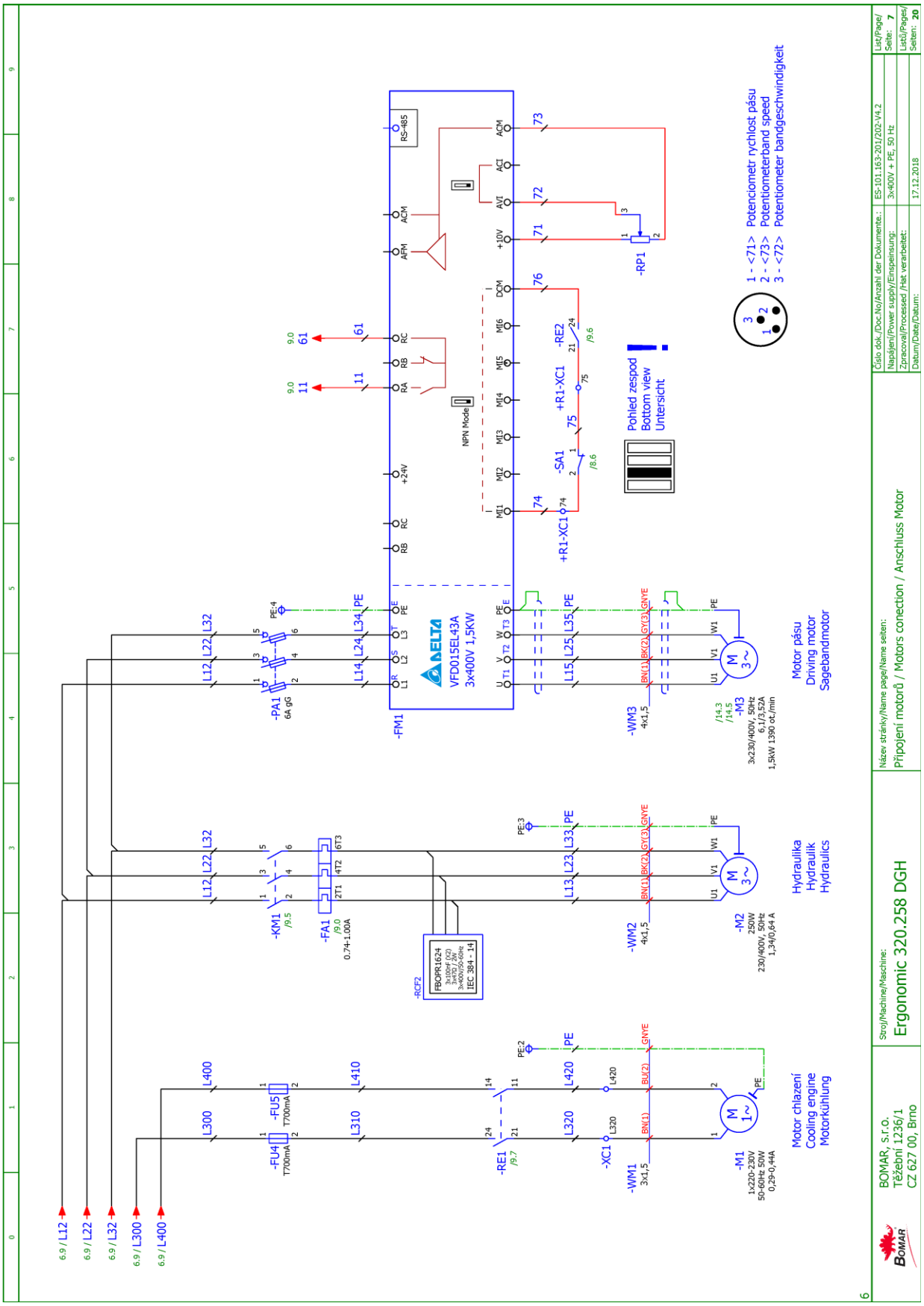
VFD015EL43A
3x400V 1,5KW
-FM1
-PA1
6A gG
-KM1
-FA1
0,74-1,00A
-FU4
T700mA
-FU5
T700mA
-RE1
-XC1
-WM1
3x1,5
-M1
1x220-230V
50-60Hz 50W
0,29-0,44A
Motor chlazení
Cooling engine
Motorkühlung
-RCF2
FBOPR1624
IEC 384 - 14
-WM2
4x1,5
-M2
250W
230/400V, 50Hz
1,34/0,64 A
Hydraulika
Hydraulik
Hydraulics
-WM3
4x1,5
-M3
3x230/400V, 50Hz
6,1/3,52A
1,5KW 1390 ot./min
Motor pásu
Driving motor
Sagebandmotor
-SA1
-RE2
+R1-XC1
-RP1
Pohled zespod
Bottom view
Untersicht
1 - <71> Potenciometr rychlost pásu
2 - <73> Potentiometerband speed
3 - <72> Potentiometer bandgeschwindigkeit
NPN Mode
RS-485
Číslo dok./Doc.No/Anzahl der Dokumente.: ES-101.163-201/202-V4.2
Napájení/Power supply/Einspeinsung: 3x400V + PE, 50 Hz
Zpracoval/Processed /Hat verarbeitet:
Datum/Date/Datum: 17.12.2018
List/Page/ Seite: 7
Listů/Pages/ Seiten: 20
Název stránky/Name page/Name seiten:
Připojení motorů / Motors conection / Anschluss Motor
Stroj/Machine/Maschine:
Ergonomic 320.258 DGH
BOMAR, s.r.o.
Těžební 1236/1
CZ 627 00, Brno
BOMAR

Schémata
Schemas
Schematics

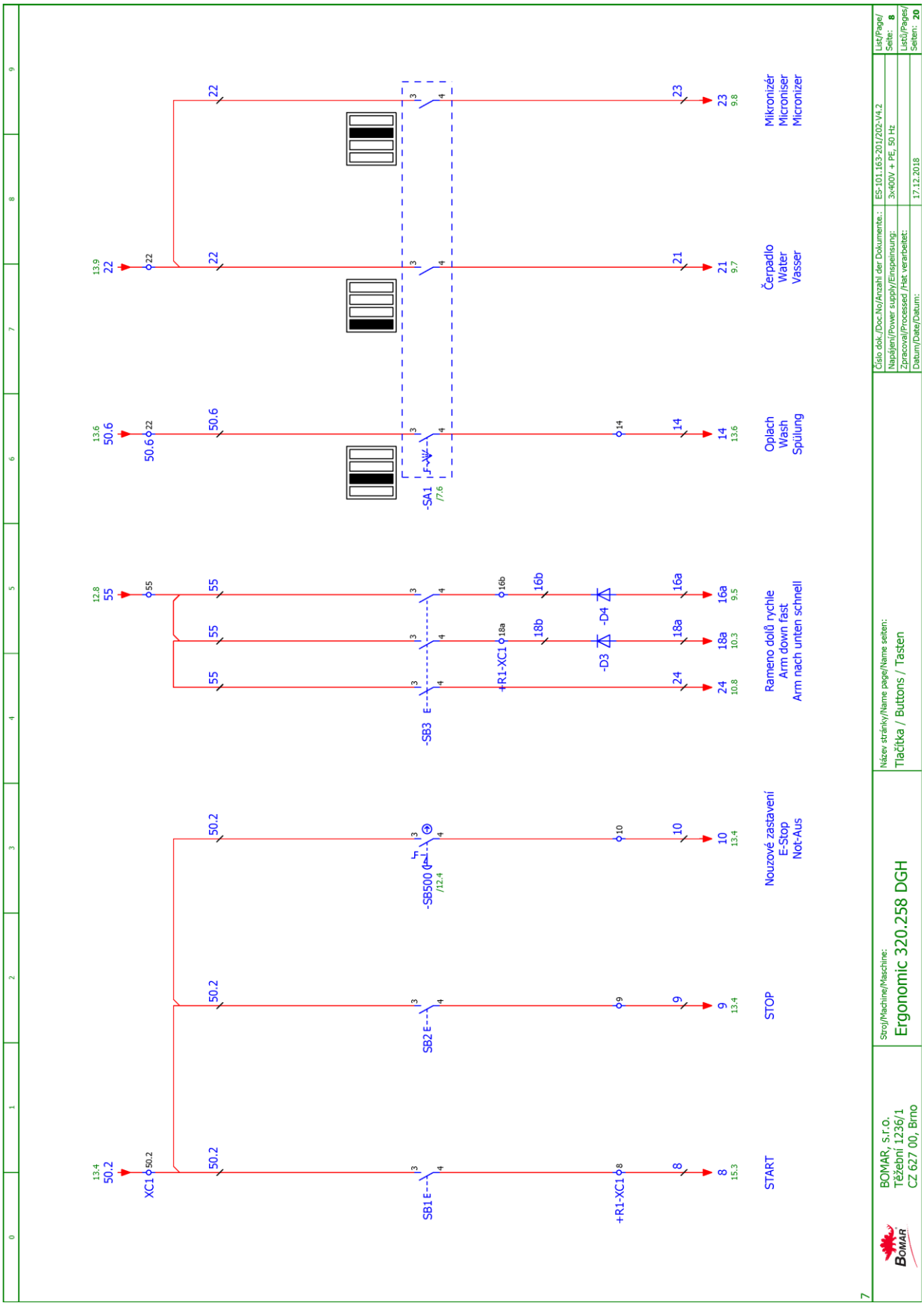

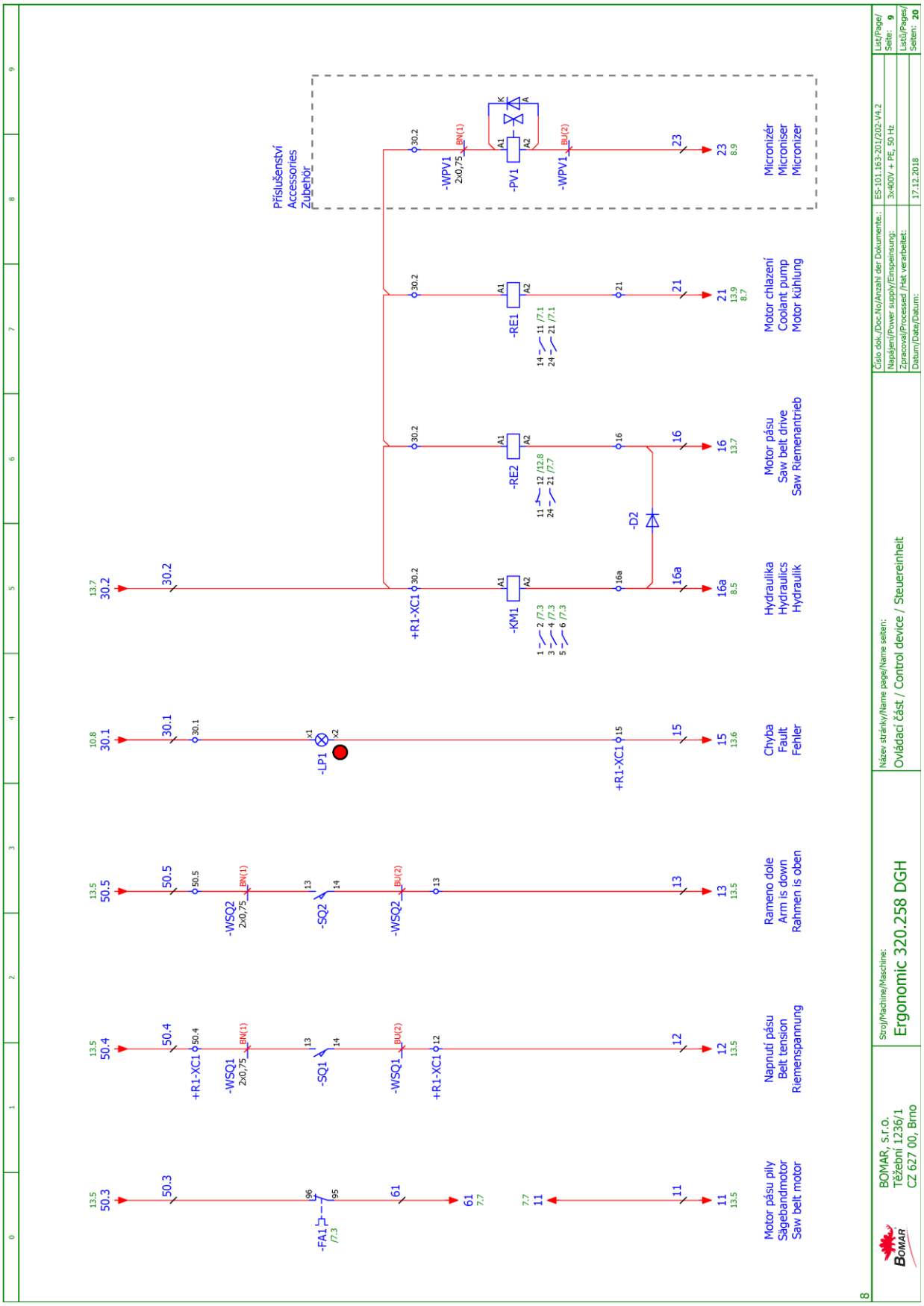
Příslušenství
Accessories
Zubehör
Micronizér
Microniser
Micronizer
Motor chlazení
Coolant pump
Motor kühlung
Motor pásu
Saw belt drive
Saw Riemenantrieb
Hydraulika
Hydraulics
Hydraulik
Chyba
Fault
Fehler
Rameno dole
Arm is down
Rahmen is oben
Napnutí pásu
Belt tension
Riemenspannung
Motor pásu pily
Sägebandmotor
Saw belt motor
-WPV1
-PV1
-RE1
-RE2
-KM1
-D2
-LP1
-WSQ2
-SQ2
-WSQ1
-SQ1
-FA1
+R1-XC1
Číslo dok./Doc.No/Anzahl der Dokumente.:
ES-101.163-201/202-V4.2
Napájení/Power supply/Einspeisung:
3x400V + PE, 50 Hz
Zpracoval/Processed /Hat verarbeitet:
Datum/Date/Datum:
17.12.2018
List/Page/
Seite: 9
Listů/Pages/
Seiten: 20
Název stránky/Name page/Name seiten:
Ovládací část / Control device / Steuereinheit
Stroj/Machine/Maschine:
Ergonomic 320.258 DGH
BOMAR, s.r.o.
Těžební 1236/1
CZ 627 00, Brno

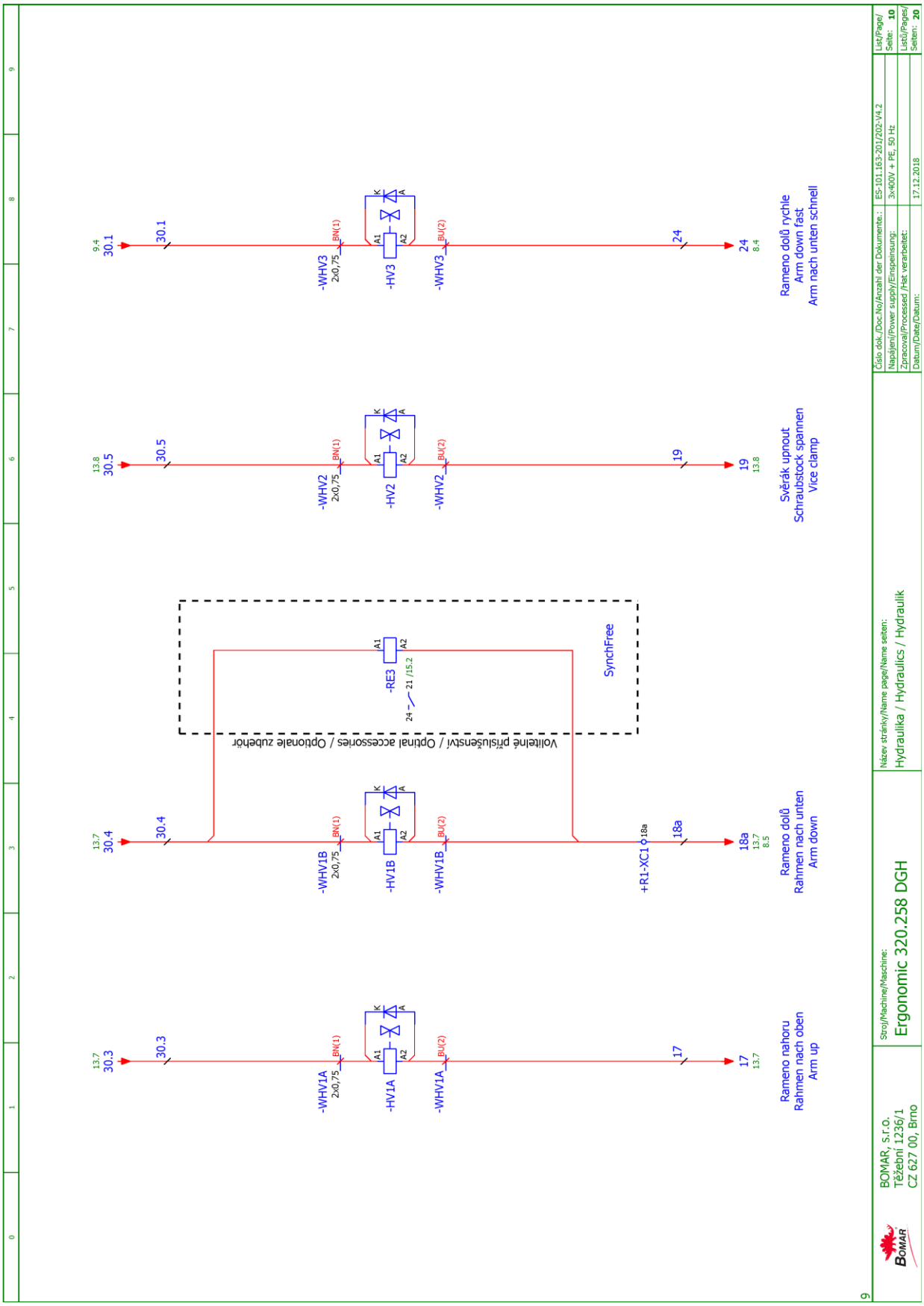
9.4
30.1
30.1
-WHV3
2x0,75
BN(1)
-HV3
A1
A2
K
A
-WHV3_
BU(2)
24
24
8.4
Rameno dolů rychle
Arm down fast
Arm nach unten schnell
13.8
30.5
30.5
-WHV2
2x0,75
BN(1)
-HV2
-WHV2_
BU(2)
19
19
13.8
Svěrák upnout
Schraubstock spannen
Vice clamp
Volitelné příslušenství / Optional accessories / Optionale zubehör
-RE3
24
21 /15.2
SynchFree
13.7
30.4
30.4
-WHV1B
2x0,75
-HV1B
-WHV1B_
+R1-XC1
18a
18a
18a
13.7
8.5
Rameno dolů
Rahmen nach unten
Arm down
13.7
30.3
30.3
-WHV1A
2x0,75
-HV1A
-WHV1A_
17
17
13.7
Rameno nahoru
Rahmen nach oben
Arm up
BOMAR, s.r.o.
Těžební 1236/1
CZ 627 00, Brno
Stroj/Machine/Maschine:
Ergonomic 320.258 DGH
Název stránky/Name page/Name seiten:
Hydraulika / Hydraulics / Hydraulik
Číslo dok./Doc.No/Anzahl der Dokumente.:
ES-101.163-201/202-V4.2
Napájení/Power supply/Einspeisung:
3x400V + PE, 50 Hz
Zpracoval/Processed /Hat verarbeitet:
Datum/Date/Datum:
17.12.2018
List/Page/
Seite: 10
Listů/Pages/
Seiten: 20

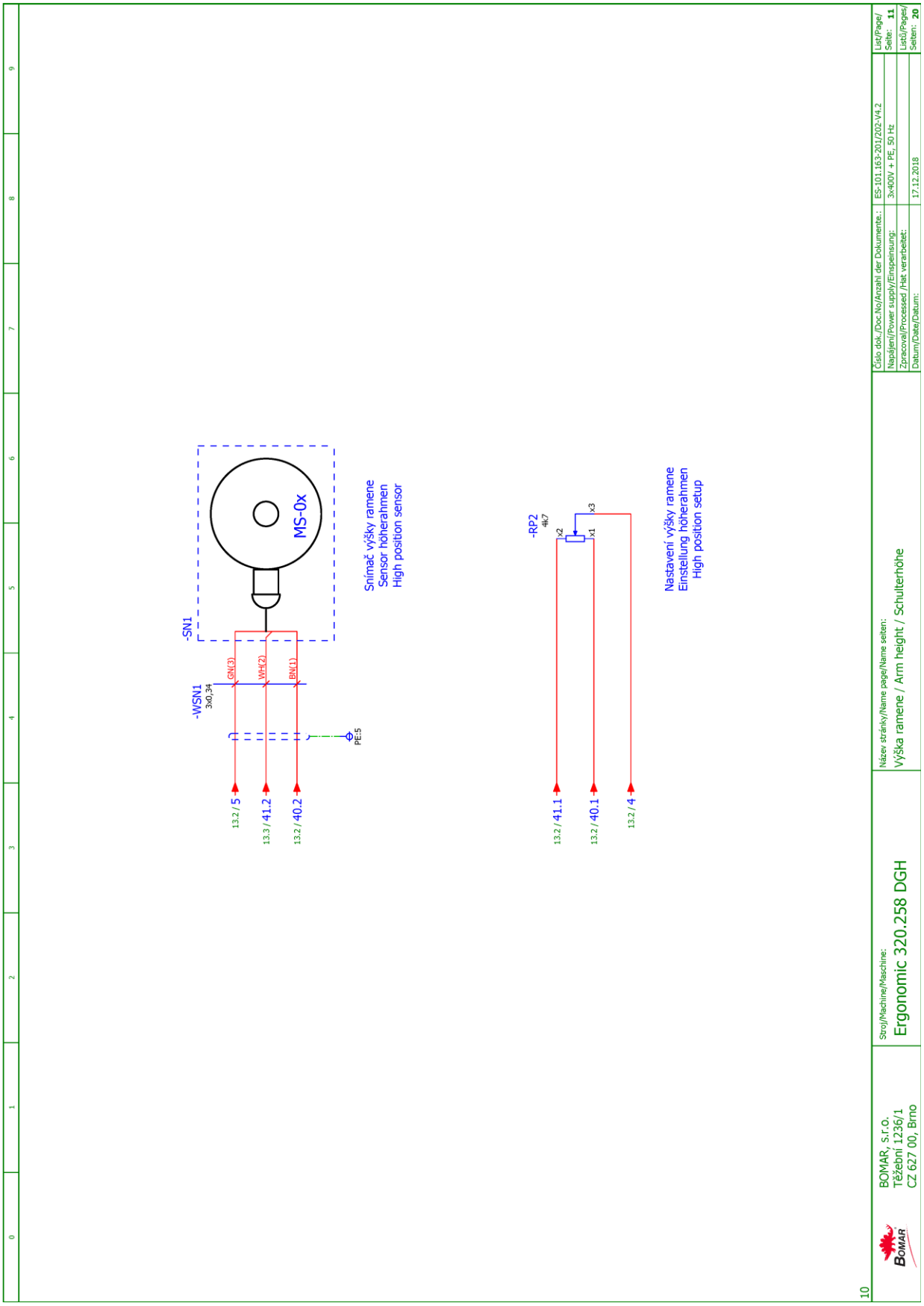
-SN1
MS-0x
Snímač výšky ramene
Sensor höherahmen
High position sensor
-WSN1
3x0,34
GN(3)
WH(2)
BN(1)
PE:5
13.2 / 5
13.3 / 41.2
13.2 / 40.2
-RP2
4k7
x2
x1
x3
Nastavení výšky ramene
Einstellung höherahmen
High position setup
13.2 / 41.1
13.2 / 40.1
13.2 / 4
10
BOMAR, s.r.o.
Těžební 1236/1
CZ 627 00, Brno
Stroj/Machine/Maschine:
Ergonomic 320.258 DGH
Název stránky/Name page/Name seiten:
Výška ramene / Arm height / Schulterhöhe
Číslo dok./Doc.No/Anzahl der Dokumente.:
ES-101.163-201/202-V4.2
List/Page/
Seite: 11
Napájení/Power supply/Einspeinsung:
3x400V + PE, 50 Hz
Listů/Pages/
Seiten: 20
Zpracoval/Processed /Hat verarbeitet:
Datum/Date/Datum:
17.12.2018

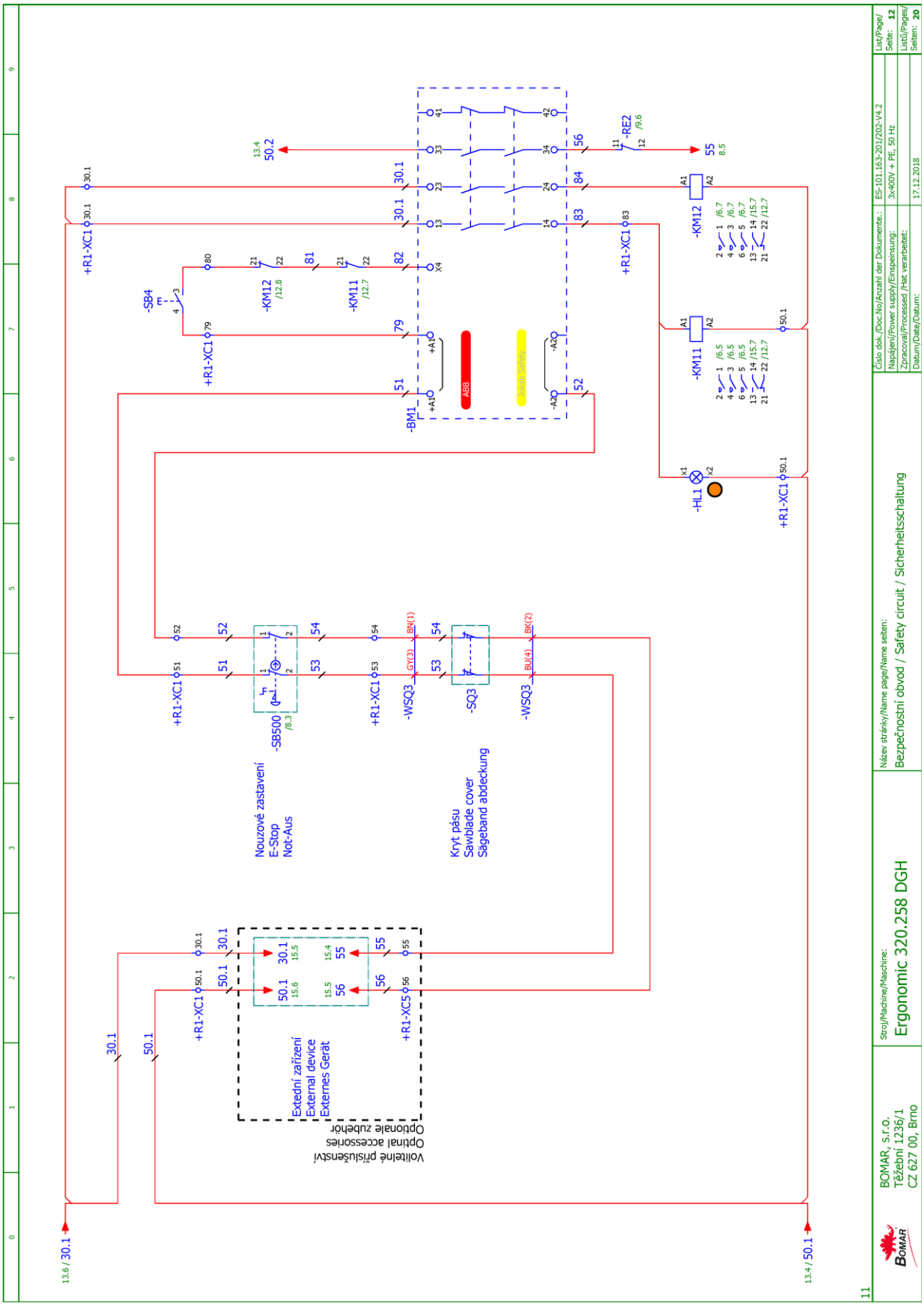

Schémata
Schemas
Schematics

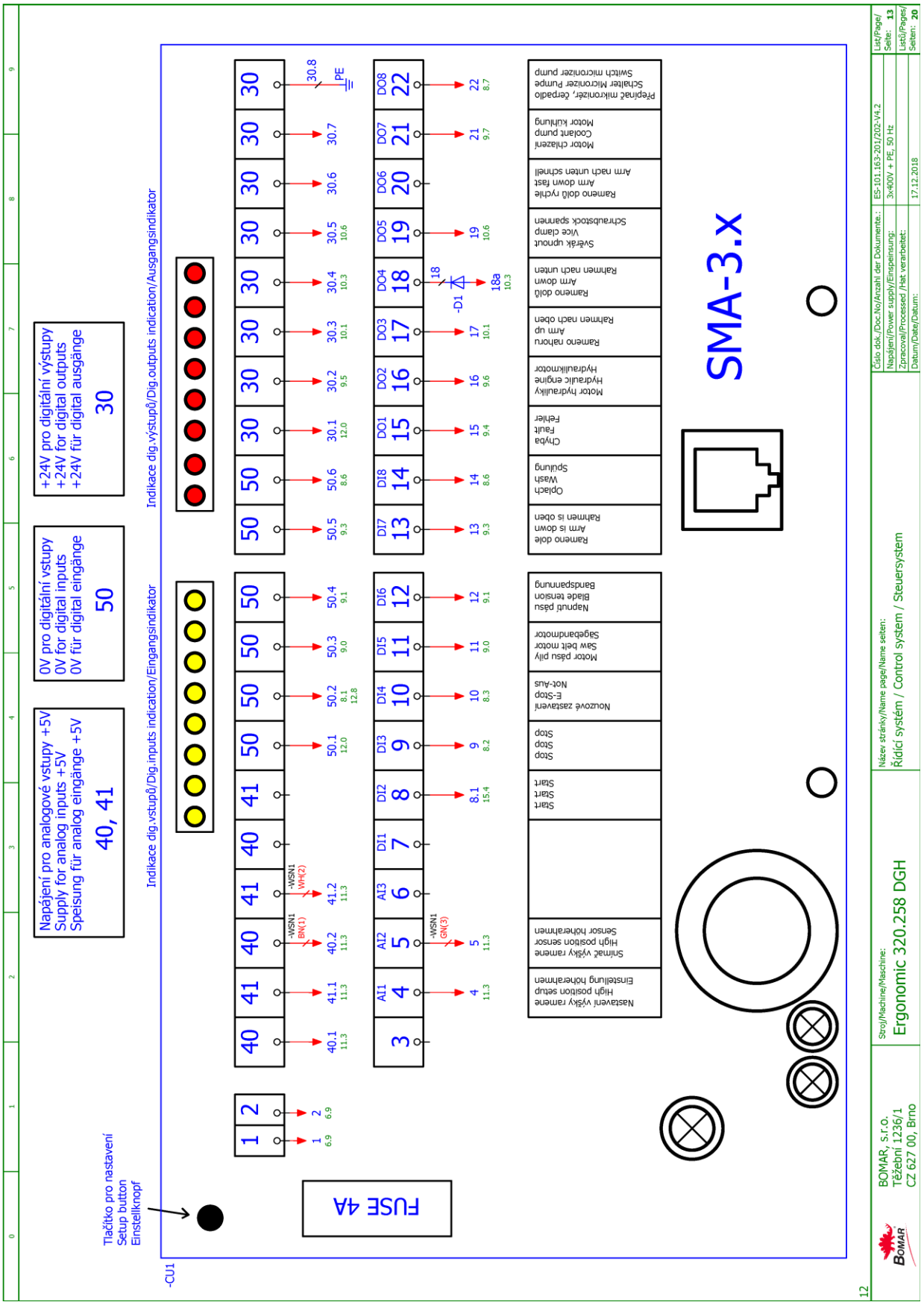
Napájení pro analogové vstupy +5V
Supply for analog inputs +5V
Speisung für analog eingänge +5V
40, 41
0V pro digitální vstupy
0V for digital inputs
0V für digital eingänge
50
+24V pro digitální výstupy
+24V for digital outputs
+24V für digital ausgänge
30
Indikace dig.vstupů/Dig.inputs indication/Eingangsindikator
Indikace dig.výstupů/Dig.outputs indication/Ausgangsindikator
Tlačítko pro nastavení
Setup button
Einstellknopf
FUSE 4A
-CU1
SMA-3.x
Nastavení výšky ramene
High position setup
Einstellung höhenrahmen
Snímač výšky ramene
High position sensor
Sensor höhenrahmen
Nouzové zastavení
E-Stop
Not-Aus
Motor pásu pily
Saw belt motor
Sägebandmotor
Napnutí pásu
Blade tension
Bandspannung
Ramено dole
Arm is down
Rahmen is oben
Úplach
Wash
Spülung
Chyba
Fault
Fehler
Motor hydrauliky
Hydraulic engine
Hydraulikmotor
Ramено nahoru
Arm up
Rahmen nach oben
Ramено dolů
Arm down
Rahmen nach unten
Svěrák upnout
Vice clamp
Schraubstock spannen
Ramено dolů rychle
Arm down fast
Arm nach unten schnell
Motor chlazení
Coolant pump
Motor kühlung
Přepínač mikronizér, čerpadlo
Schalter Micronizer Pumpe
Switch micronizer pump
Číslo dok./Doc.No/Anzahl der Dokumente:
ES-101.163-201/202-V4.2
Napájení/Power supply/Einspeisung:
3x400V + PE, 50 Hz
Zpracoval/Processed /Hat verarbeitet:
Datum/Date/Datum:
17.12.2018
List/Page/
Seite: 13
Listů/Pages/
Seiten: 20
Název stránky/Name page/Name seiten:
Řídící systém / Control system / Steuersystem
Stroj/Machine/Maschine:
Ergonomic 320.258 DGH
BOMAR, s.r.o.
Těžební 1236/1
CZ 627 00, Brno
12

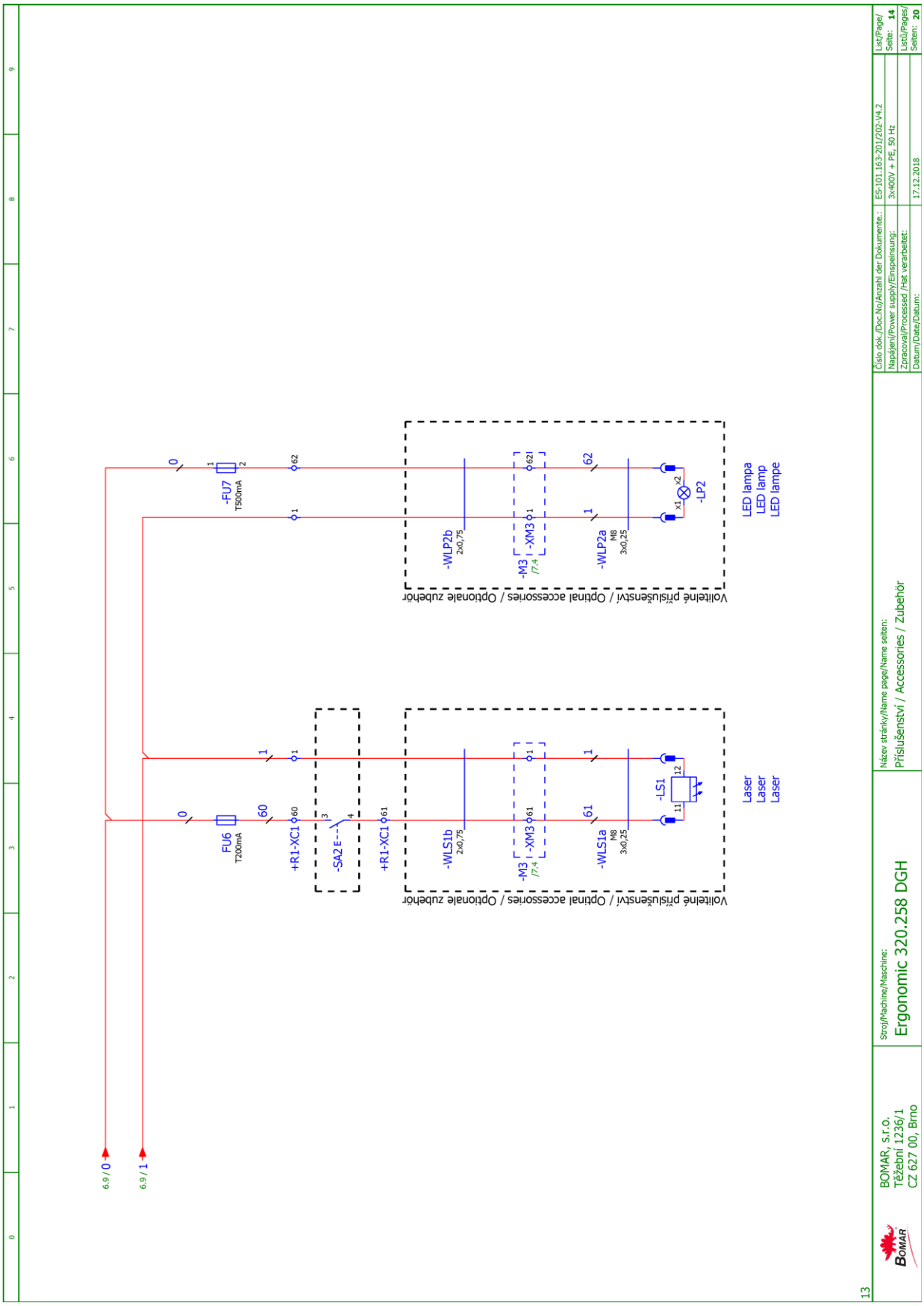

Schémata
Schemas
Schematics

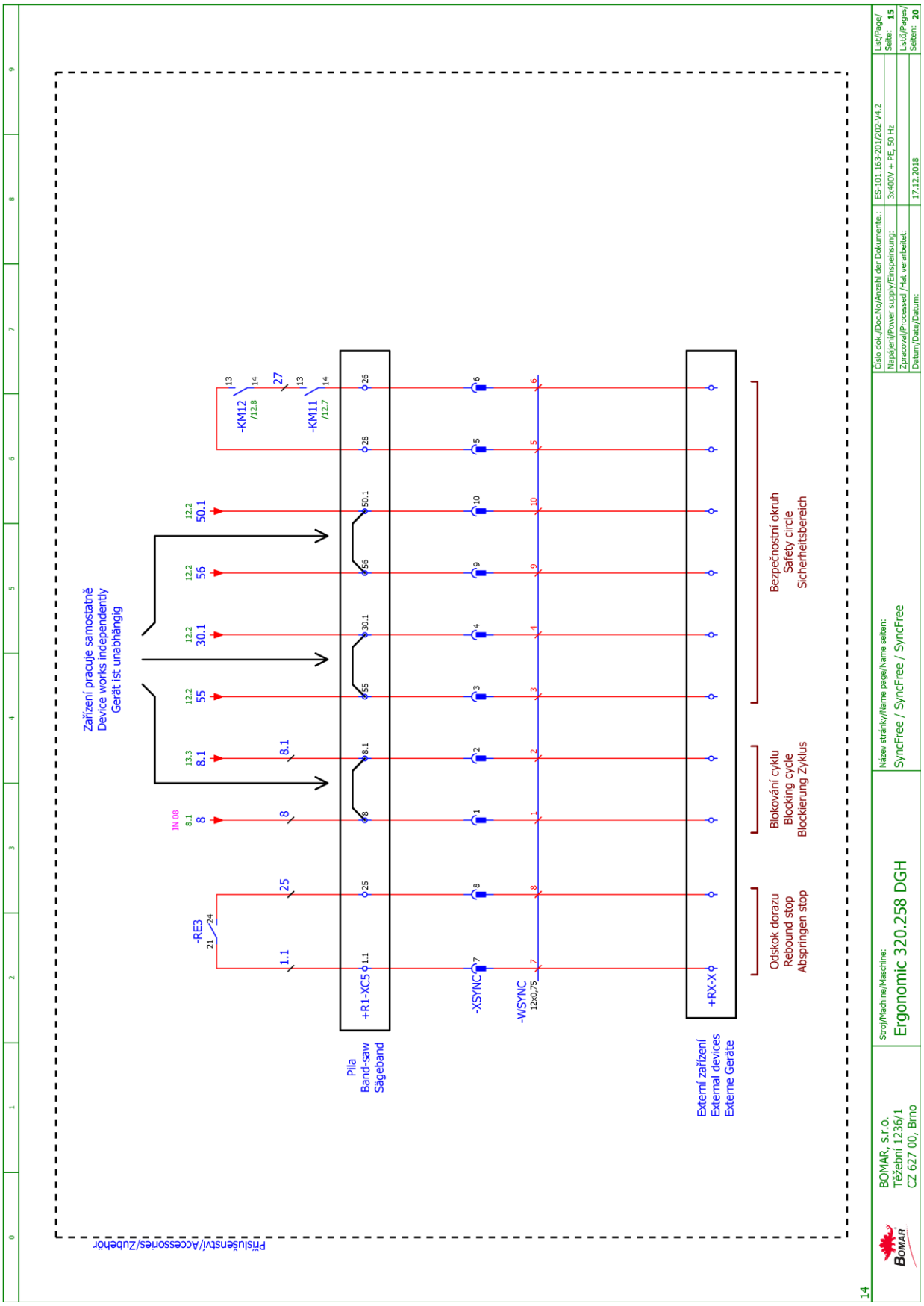
Zařízení pracuje samostatně
Device works independently
Gerät ist unabhängig
-RE3
IN 08
-KM12
-KM11
+R1-XC5
-XSYNC
-WSYNC
12x0,75
+RX-X
Pila
Band-saw
Sägeband
Externí zařízení
External devices
Externe Geräte
Odskok dorazu
Rebound stop
Abspringen stop
Blokování cyklu
Blocking cycle
Blockierung Zyklus
Bezpečnostní okruh
Safety circle
Sicherheitsbereich
Příslušenství/Accessories/Zubehör
BOMAR, s.r.o.
Těžební 1236/1
CZ 627 00, Brno
Stroj/Machine/Maschine:
Ergonomic 320.258 DGH
Název stránky/Name page/Name seiten:
SyncFree / SyncFree / SyncFree
Číslo dok./Doc.No/Anzahl der Dokumente.:
ES-101.163-201/202-V4.2
Napájení/Power supply/Einspeinsung:
3x400V + PE, 50 Hz
Zpracoval/Processed /Hat verarbeitet:
Datum/Date/Datum:
17.12.2018
List/Page/
Seite: 15
Listů/Pages/
Seiten: 20
14

6.2. Hydraulické schéma / Hydraulisches Schéma / Hydraulic diagram

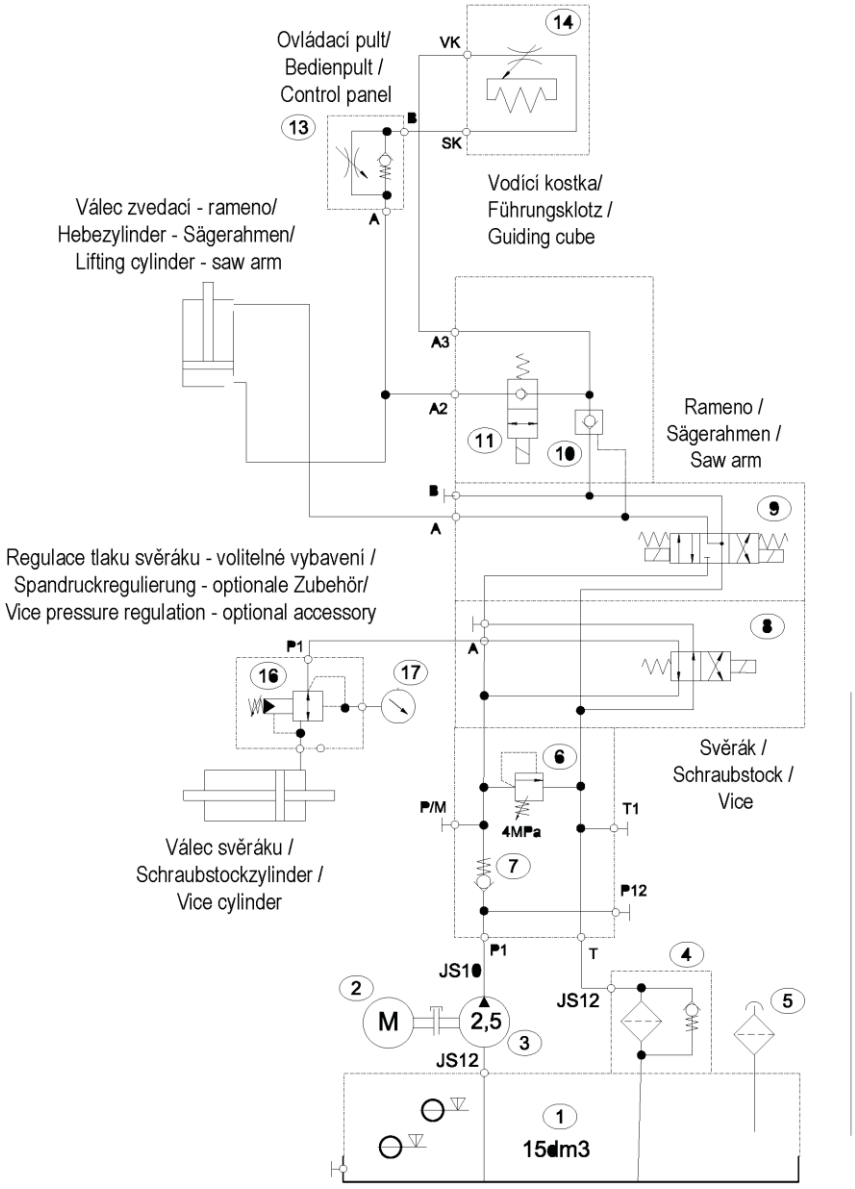

Základní technické parametry
Technische Spezifikation
Technical specification

Typ /Type /Type **Ergonomic 320.258 DGH, 340.278 DGH, HBS 250 HA** Hydraulický agregát / Hydroaggregat /Hydro aggregat	
Neuvedené světlosti/ Unerwähnt Lichtbreite/ Unlisted inside diameters	JS6
Výstupní šroubení / Ausgangschraubung/ Output screewing	G1/4"
p_{max}	4 Mpa
Q	3,3 dm^3/min
n	1400 ot./min
P	0,25 kW

Poz.	Název položky		ks
Pos.	Bezeichnung		Menge
Pos.	Item		Pcs.
3	Hydrogenerátor / Hydraulikgenerator / Hydrogenerator	10A2, 5X053G, 2,5cm3/ot, zubový/ with teeth/ mit Zähnen	1
4	Zpětný filtr / Rücklauffilter / Return filter	W79	1
5	Nalévací zátka / Stopfen / Fill stopper	CPT-MD-FA/1	1
6	Přepouštěcí ventil / Bypaßventil / By pass valve	MO-020/10 (4MPa)	1
7	Ventil zpětný / Gegendruckventil / Clack-valve	CVG 14	1
8	Rozváděč / Schaltschrank / Switchboard		1
9	Rozváděč / Schaltschrank / Switchboard	DVE03-S04-B5-C24/20/T1-M1+K1	1
10	Hydraulický zámek / Hydraulisches Schloß / Hydraulic lock	PC08-30-0-N	1
11	Sedlový ventil/ Globe valve/ Geradsitzventil	SV08-20-0-N-24EG Rychloposuv/ Schnell Eilgang/ Speed movement	1
12			
13	Škrtící ventil / Drosselventil / Throttle-valve	VS01-04/R2-OS 92.152.004 S obtokem/ mit Umströmung/ with flow around	1
14	Kostka regulace / Regulationklotz / Regulation cube	251.077 Manuální/ Manual/ Manuell	2/1
15	Tlakový spínač / Druckschalter / Pressure switch	0166415031059 20-50 bar SUCO	1
16	Redukční ventil / Reduktionsventil / Control valve	VRN2-06/S-6R 92.154.001 Kostka / Würfel / Cube: 201.2115-201	1/0
17	Manometr / Manometer / Manometer	D68, RAD., 0-60 bar	1/0

7. Výkresy sestav pro objednání náhradních dílů / Zeichnungen für Bestellung der Ersatzteile / Drawing assemblies for spare parts order

- Při objednávání náhradních dílů vždy uvádějte: typ stroje (např. practix Ergonomic 320.258 DGH) , výrobní číslo (např. 125) a rok výroby (např. 1999).

- In die Bestellung der Ersatzteile führen Sie immer an: Maschinentyp (z. B. Ergonomic 320.258 DGH), Serien Nr. (z. B. 125) und Baujahr (z. B. 1999).

- For spare parts order, you must always to allege: type of machine (for example Ergonomic 320.258 DGH), serial number (for example 125, see cover page) and year of construction (for example 1999).

7.1. Ergonomic 320.258 DGH

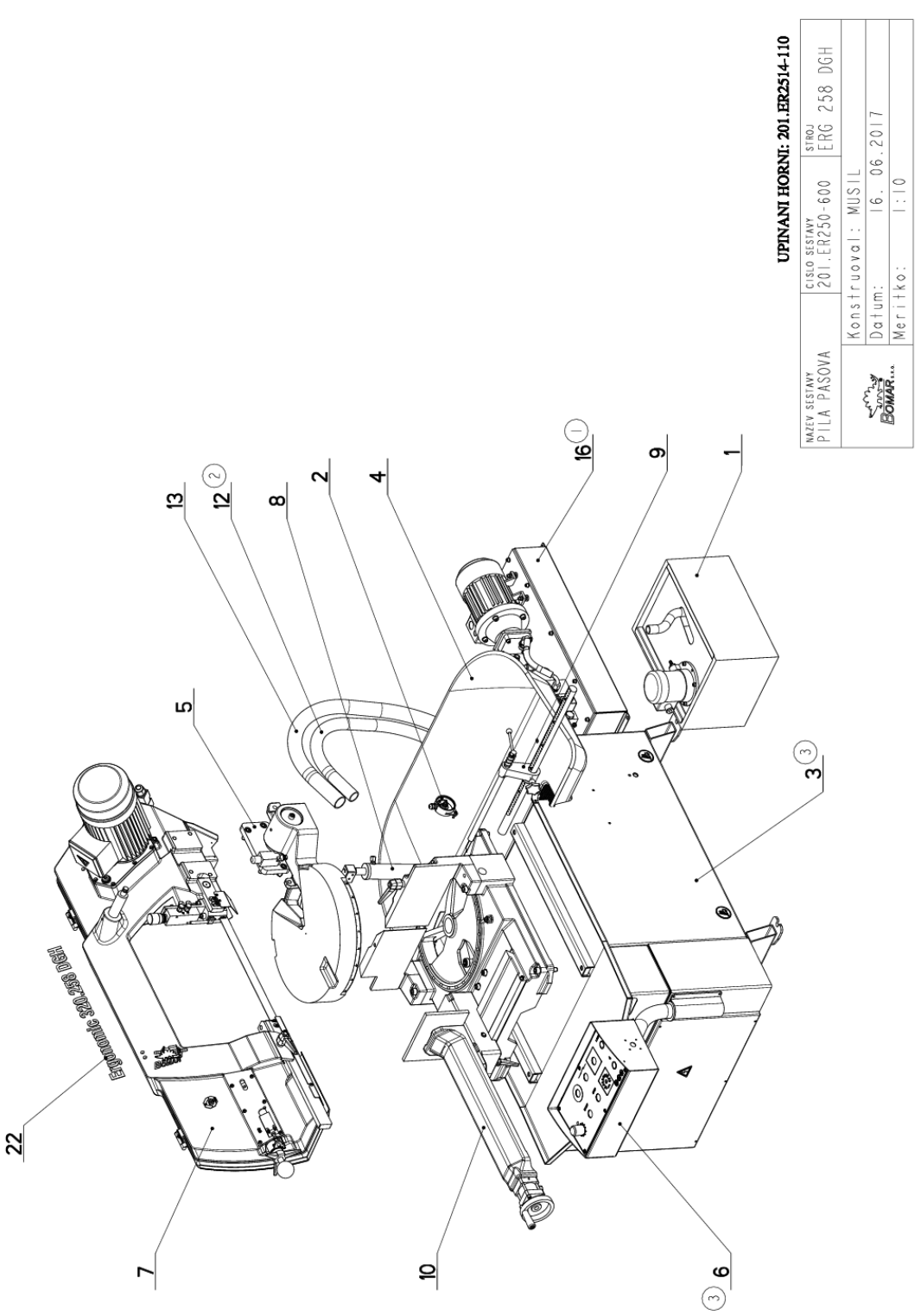

7.2. Kusovník / Piece list / Stückliste - Ergonomic 320.258 DGH

Cislo Sestavy	Ver.	Nazev sestavy
201.ER250-600	3	PILA PASOVA/BAND SAW/BANDSÄGE

Poz.	Objednaci cislo	Ver.	Nazev polozky	Rozmer	Ks
1	201.0506-100	2	CHLAZENI / COOLING / KÜHLUNG		1
2	201.0614-200	0	ODMEROVANI / MEASURING / GEHRUNGSMESSUNG		1
3	201.ER251-110 (3)	0	PODSTAVEC / BASE / UNTERSATZ		1
4	201.ER251-302	2	VANA / TANK / WANNE		1
5	201.ER252-100	0	KONZOLA OTOCNA / TURNABLE CONSOL / DREHKONSOLE		1
6	201.ER2530-010 (3)	0	ROZVADEC ELEKTRO / ELECTRO DISTRIBUTOR / SCHALTSCHRANK		1
7	201.ER254-600	0	RAMENO / SAW ARM / SÄGERAHMEN		1
8	201.ER257-310	0	VALEC ZVEDACI / LIFTING CYLINDER / HEBEZYLINDER		1
9	201.ER259-120	1	DORAZ / STOP PIECE / ANSCHLAG		1
10	201.ER259-600	0	STUL / TABLE / TISCH		1
11	30.ER299-601	0	STITEK TYPOVY / MACHINE LABEL / MASCHINE SCHILD	P 0.5x65	1
12	41.001.004 (2)	0	HADICE / HOSE / SCHLAUCH	PG29	1
13	41.001.005	0	HADICE / HOSE / SCHLAUCH	PG36	1
14	91.071.004	0	VYVODKA / BUSHING / TÜLLE	VYVODKA	1
15	91.072.007	0	MATICE / NUT / MUTTER	MATICE	1
16	92.001.120 (1)	0	AGREGAT HYDRAULICKY / HYDRAULIC GENERATOR / HYDRAULIKAGGREGAT	S001_716_1	1
17	99.900.040	0	SAMOLEPKA / STICKER / AUFKLEBER		1
18	99.900.045	0	SAMOLEPKA / STICKER / AUFKLEBER		2
19	99.900.053	0	SAMOLEPKA / STICKER / AUFKLEBER		1
20	99.900.068	0	SAMOLEPKA / STICKER / AUFKLEBER	pouziti vysokozvizneno vozikku	4
21	99.901.032	0	SAMOLEPKA / STICKER / AUFKLEBER	CETIFIKACNI SAMOLEPKA	1
22	99.901.091	0	SAMOLEPKA / STICKER / AUFKLEBER		1

1.ZRUS.AGREGAT HYDRAULICKY 92.001.040 A NAHR.92.001.120. 155/ZM222 21.7.2016 SLEZACKOVA

2.ZRUS.PODSTAVEC 201.ER2530-100 A NAHR.201.ER251-600,PRID.HADICE 41.001.004. 155/ZM201 9.9.2016 SLEZACKOVA

3.ZRUS.PODSTAVEC 201.ER251-600 A NAHR.201.ER251-110,ZRUS.OVLADACI PANEL 201.ER2530-600 A NAHR.ROZVADEC 201.ER2530-010. 072/ZM148 16.6.2017 SLEZACKOVA

Cislo Sestavy/Number of assembly/Nummer der Baugruppe; Verze (Ver.)/Version/Version; Nazev sestavy/Assembly title/Name der Baugruppe; Pozice (Poz.)/Position/Position; Objednaci cislo/Purchase order number/Bestellnummer; Nazev polozky/Volume title/Name der Position; Rozmer/Stock size/Abmessung

7.3. Ergonomic 320.258 DGH

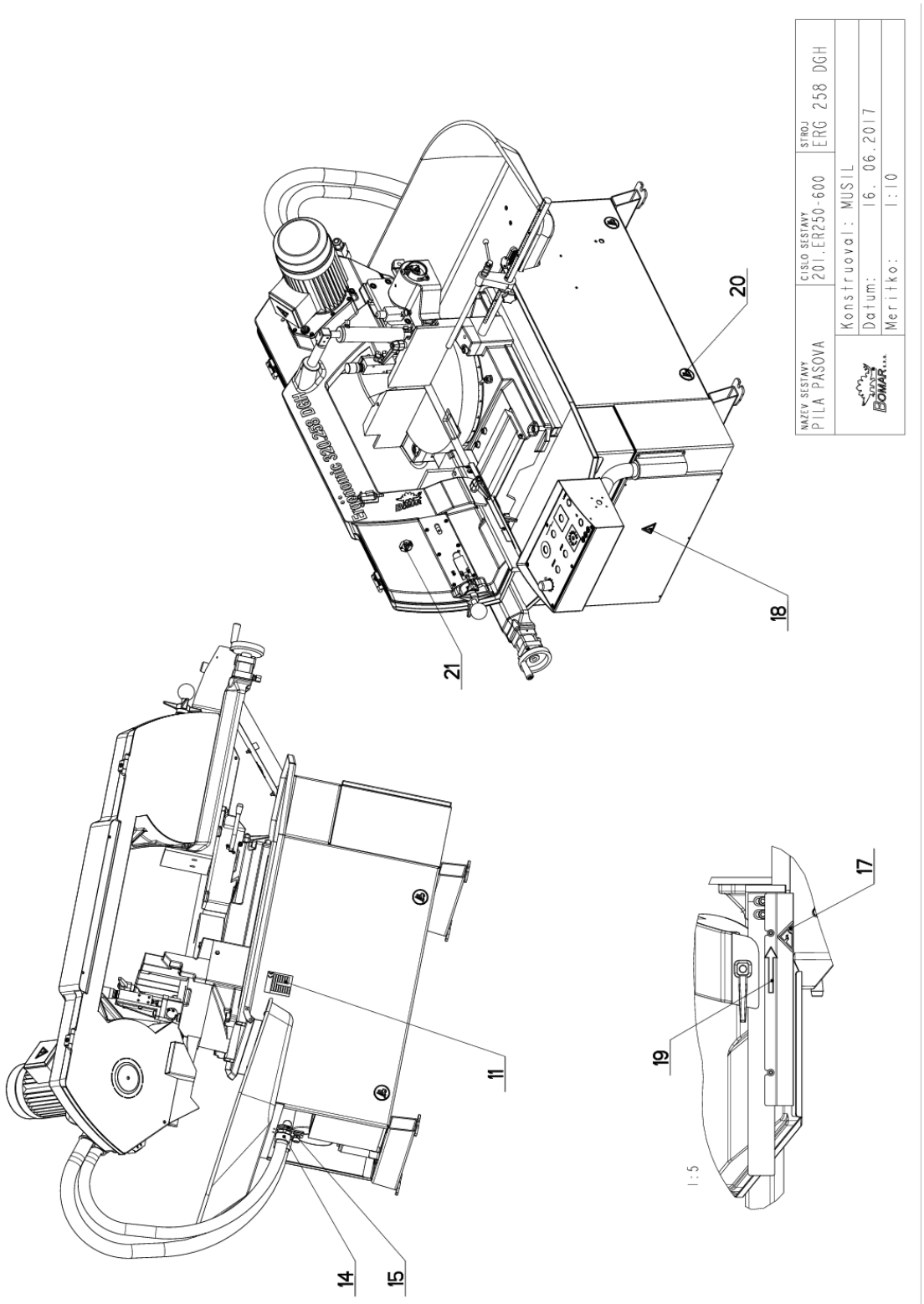

Cislo Sestavy	Ver.	Nazev sestavy
201.ER250-600	3	PILA PASOVA/BAND SAW/BANDSÄGE

Poz.	Objednaci cislo	Ver.	Nazev polozky	Rozmer	Ks
1	201.0506-100	2	CHLAZENI / COOLING / KÜHLUNG		1
2	201.0614-200	0	ODMEROVANI / MEASURING / GEHRUNGSMESSUNG		1
3	201.ER251-110 (3)	0	PODSTAVEC / BASE / UNTERSATZ		1
4	201.ER251-302	2	VANA / TANK / WANNE		1
5	201.ER252-100	0	KONZOLA OTOCNA / TURNABLE CONSOL / DREHKONSOLE		1
6	201.ER2530-010 (3)	0	ROZVADEC ELEKTRO / ELECTRO DISTRIBUTOR / SCHALTSCHRANK		1
7	201.ER254-600	0	RAMENO / SAW ARM / SÄGERAHMEN		1
8	201.ER257-310	0	VALEC ZVEDACI / LIFTING CYLINDER / HEBEZYLINDER		1
9	201.ER259-120	1	DORAZ / STOP PIECE / ANSCHLAG		1
10	201.ER259-600	0	STUL / TABLE / TISCH		1
11	30.ER299-601	0	STITEK TYPOVY / MACHINE LABEL / MASCHINE SCHILD	P 0.5x65	1
12	41.001.004 (2)	0	HADICE / HOSE / SCHLAUCH	PG29	1
13	41.001.005	0	HADICE / HOSE / SCHLAUCH	PG36	1
14	91.071.004	0	VYVODKA / BUSHING / TÜLLE	VYVODKA	1
15	91.072.007	0	MATICE / NUT / MUTTER	MATICE	1
16	92.001.120 (1)	0	AGREGAT HYDRAULICKY / HYDRAULIC GENERATOR / HYDRAULIKAGGREGAT	S001_716_1	1
17	99.900.040	0	SAMOLEPKA / STICKER / AUFKLEBER		1
18	99.900.045	0	SAMOLEPKA / STICKER / AUFKLEBER		2
19	99.900.053	0	SAMOLEPKA / STICKER / AUFKLEBER		1
20	99.900.068	0	SAMOLEPKA / STICKER / AUFKLEBER	pouziti vysokozvizneno vozikku	4
21	99.901.032	0	SAMOLEPKA / STICKER / AUFKLEBER	CETIFIKACNI SAMOLEPKA	1
22	99.901.091	0	SAMOLEPKA / STICKER / AUFKLEBER		1

1.ZRUS.AGREGAT HYDRAULICKY 92.001.040 A NAHR.92.001.120. 155/ZM222 21.7.2016 SLEZACKOVA

2.ZRUS.PODSTAVEC 201.ER2530-100 A NAHR.201.ER251-600,PRID.HADICE 41.001.004. 155/ZM201 9.9.2016 SLEZACKOVA

3.ZRUS.PODSTAVEC 201.ER251-600 A NAHR.201.ER251-110,ZRUS.OVLADACI PANEL 201.ER2530-600 A NAHR.ROZVADEC 201.ER2530-010. 072/ZM148 16.6.2017 SLEZACKOVA

Cislo Sestavy/Number of assembly/Nummer der Baugruppe; Verze (Ver.)/Version/Version; Nazev sestavy/Assembly title/Name der Baugruppe; Pozice (Poz.)/Position/Position; Objednaci cislo/Purchase order number/Bestellnummer; Nazev polozky/Volume title/Name der Position; Rozmer/Stock size/Abmessung

7.5. Chlazení / Cooling / Kühlung

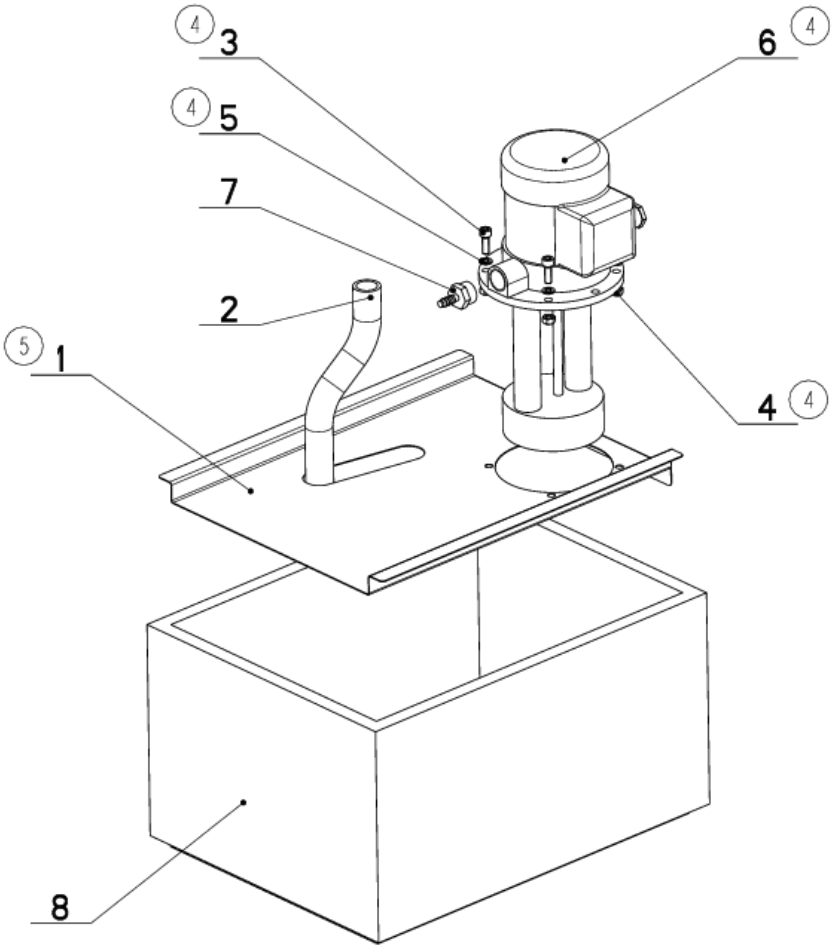

NAZEV SESTAVY	CISLO SESTAVY	STROJ
CHLAZENI	201.0506-100	ERGO250

Konstruoval:	NEUMANN
Datum:	10. 05.2017
Meritko:	1:5

7.6. Kusovník / Piece list / Stückliste - Chlazení / Cooling / Kühlung

Cislo Sestavy	Ver.	Nazev sestavy
201.0506-100	5	CHLAZENI/COOLING/KÜHLUNG

Poz.	Objednaci cislo	Ver.	Nazev polozky	Rozmer	Ks
1	30.8006-501 (5)	1	VIKO / COVER / DECKEL	P 0,8 x329	1
2	42.020.003	0	HADICE / HOSE / SCHLAUCH	19x3	1
3	90.001.25.076 (4)	0	SROUB IMBUS / ALLEN HEAD BOLT / IMBUSSCHRAUBE	M6X18	4
4	90.100.55.004 (4)	0	MATICE / NUT / MUTTER	MATICE _ M6	4
5	90.152.50.001 (4)	0	PODL VEJIROVA ZN / /	6.4	4
6	91.020.035 (4)	0	CERPADLO CHLAZENI / COOLING PUMP / KÜHLMITTELPUMPE	230/400V	1
7	94.202.020 (4)	0	REDUKCE / REDUCTION / ADAPTOR / REDUKTION	1/2"-6	1
8	94.403.003	0	NADRZ / CONTAINER / BEHALTER		1

1.ZRUS.CERPADLO 91.020.005 A NAHR.91.020.019,ZRUS.VIKO 30.0506-201 A NAHR.30.8006-301,ZRUS.SOUC.30.0506-003, 90.100.55.004,94.202.005,42.020.001,99.260.001,94.202.002. 299/ZM274 12.11.2013 SLEZACKOVA

2.PRIDANO SITO 30.8006-002. 024/ZM100 27.4.2016 SLEZACKOVA

3.ZRUSEN DRZAK 30.8006-002 A NAHR.30.ER251-014. 155/ZM281 16.9.2016 SLEZACKOVA

4.ZRUS.CERPADLO 91.020.019 A NAHR.91.020.035,ZRUS.VIKO 30.8006-301 A NAHR.30.8006-401,ZRUS.DRZAK 30.ER251-014, PRID.REDUKCE 94.202.020,4xPODLOZKA 6,4(90.152.50.001),4xMATICE M6(90.100.55.004),4xSROUB M6x18(90.001.25.076) 112/ZM151 19.4.2017 SLEZACKOVA

5.ZRUSENO VIKO 30.8006-401 A NAHR.30.8006-501.127/ZM172 10.5.2017 SLEZACKOVA

Cislo Sestavy/Number of assembly/Nummer der Baugruppe; Verze (Ver.)/Version/Version; Nazev sestavy/Assembly title/Name der Baugruppe; Pozice (Poz.)/Position/Position; Objednaci cislo/Purchase order number/Bestellnummer; Nazev polozky/Volume title/Name der Position; Rozmer/Stock size/Abmessung

7.7. Odměřování/ Measuring/ Gehrungsmessung

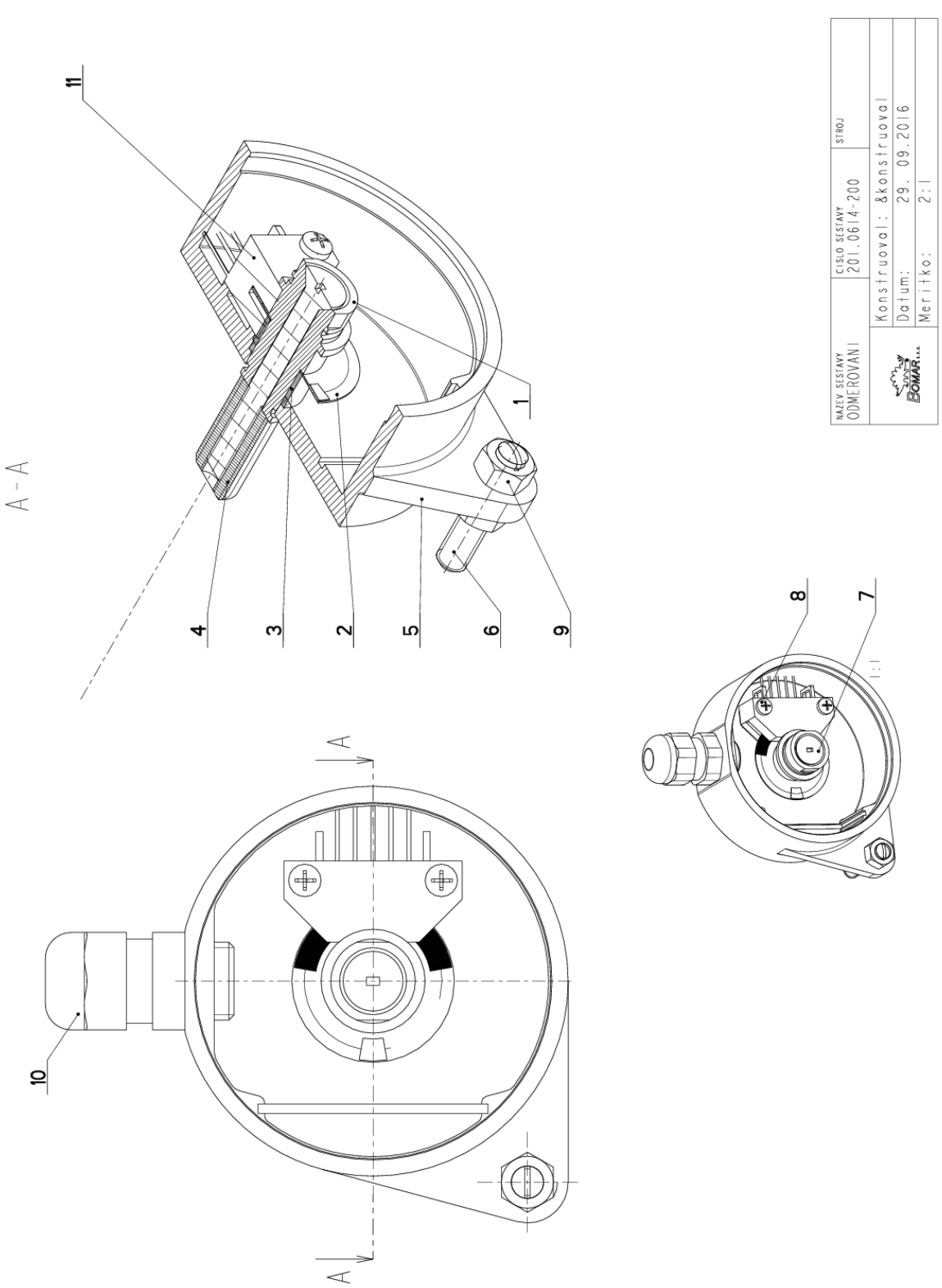

7.8. Kusovník / Piece list / Stückliste - Odměřování/ Measuring/ Gehrungsmessung

Cislo Sestavy	Ver.	Nazev sestavy
201.0614-200	0	ODMEROVANI/MEASURING/GEHRUNGSMESSUNG

Poz.	Objednaci cislo	Ver.	Nazev polozky	Rozmer	Ks
1	30.0614-201	0	CEP / LUG / BOLZEN	d 16	1
2	30.0614-203	0	CLONA / CURTAIN / SCHÜRZE	FOLIE 0.3	1
3	30.0614-204	0	POUZDRO / SLEEVE / BÜCHSE	TR 13x1	1
4	30.0614-208	0	SROUB / BOLT / SCHRAUBE	TYC M10	1
5	31.0614-202	0	KRABICE / BOX / DOSE	VYLISEK-PLAST	1
6	90.002.20.027	0	SROUB STAVECI / ADJUSTMENT BOLT / STELLSCHRAUBE	SROUB M5X25	1
7	90.011.27.019	0	SROUB ZAPUSTNY / COUNTERSINK BOLT / SENKSCHRAUBE	SROUB M5X40	1
8	90.014.50.004	0	SROUB / BOLT / SCHRAUBE	M2.5x14	2
9	90.100.55.003	0	MATICE / NUT / MUTTER	MATICE _ M5	2
10	91.070.010	0	PRUCHODKA / LEADTHROUGH / DURCHFÜHRUNG	M12x1.5 CERNA	1
11	91.400.043	0	SNIMAC / SENSOR / SENSOR		1

Cislo Sestavy/Number of assembly/Nummer der Baugruppe; Verze (Ver.)/Version/Version; Nazev sestavy/Assembly title/Name der Baugruppe; Pozice (Poz.)/Position/Position; Objednaci cislo/Purchase order number/Bestellnummer; Nazev polozky/Volume title/Name der Position; Rozmer/Stock size/Abmessung

7.9. Vana/ Tank/ Wanne

Cislo Sestavy	Ver.	Nazev sestavy
201.ER251-302	2	VANA/TANK/WANNE

Poz.	Objednaci cislo	Ver.	Nazev polozky	Rozmer	Ks
1	30.ER251-304 (1)	0	SITO / SIEVE / GITTERWERK	P1x95	1
2	30.ER251-305	1	VANA / TANK / WANNE		1

1.PRIDAN KROUZEK 20x2(96.002.046),PODLOZKA 20(90.167.00.001),ZRUS.VANA 31.ER251-302.1 A NAHR.30.ER251-305.
213/ZM177 9.6.2016 SLEZACKOVA

2.ZRUS.TRUBKA 30.ER251-303,PODLOZKA 90.167.00.001,KROUZEK 96.002.046. 265/ZM345 21.10.2016 SLEZACKOVA

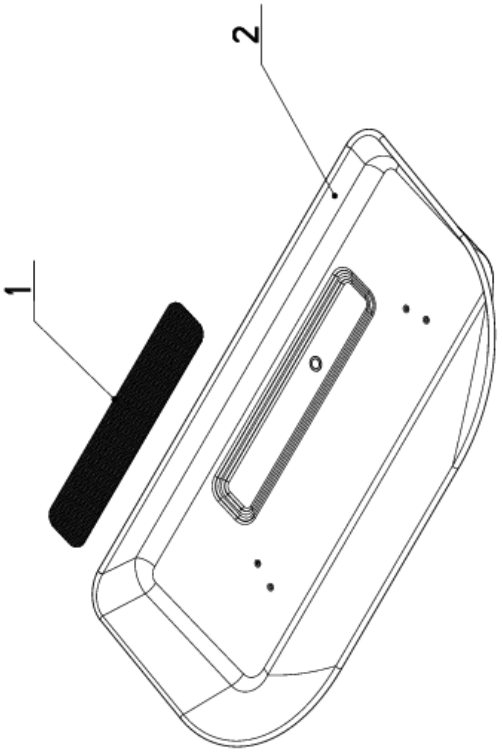

1:10

Cislo Sestavy/Number of assembly/Nummer der Baugruppe; Verze (Ver.)/Version/Version; Nazev sestavy/Assembly title/Name der Baugruppe; Pozice (Poz.)/Position/Position;
Objednaci cislo/Purchase order number/Bestellnummer; Nazev polozky/Volume title/Name der Position; Rozmer/Stock size/Abmessung

7.10. Podstavec/ Base/ Untersatz

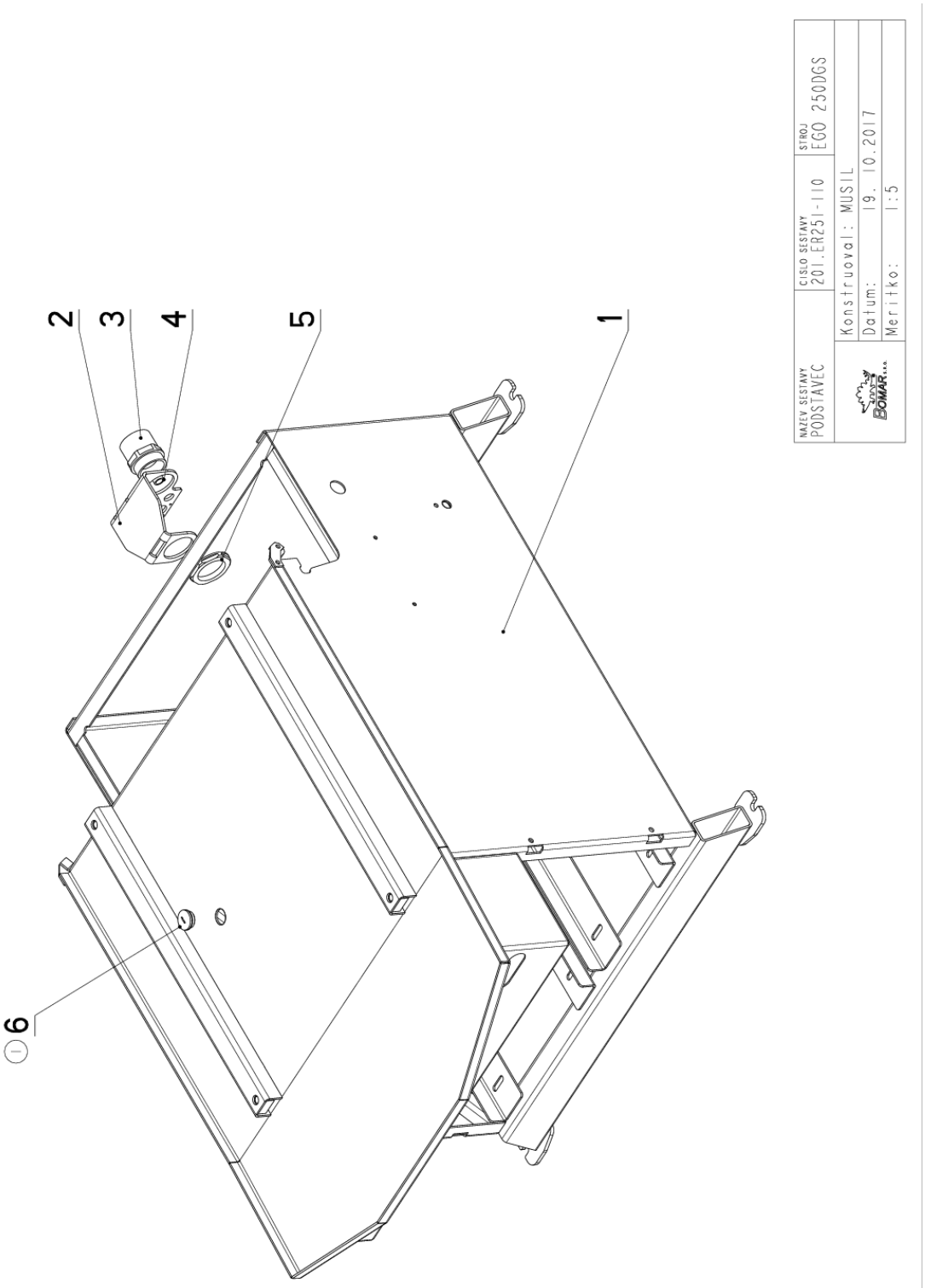

7.11. Kusovník / Piece list / Stückliste – Podstavec/ Base/ Untersatz

Cislo Sestavy	Ver.	Nazev sestavy
201.ER251-110	1	PODSTAVEC/BASE/UNTERSATZ

Poz.	Objednaci cislo	Ver.	Nazev polozky	Rozmer	Ks
1	30.ER251-111	1	PODSTAVEC / BASE / UNTERSATZ		1
2	30.ER251-604	1	DRZAK / HOLDER / HALTER	P4x110	1
3	91.071.005	0	PRUCHODKA / LEADTHROUGH / DURCHFÜHRUNG		1
4	91.071.015	0	VYVODKA / BUSHING / TÜLLE		1
5	91.072.008	0	MATICE / NUT / MUTTER		1
6	91.074.013 (1)	0	UCPAVKA / PLUG / STOPFEN	M25x1,5	1

1.PRIDANA UCPAVKA 91.074.013. 219/ZM315 18.10.2017 SLEZACKOVA

Cislo Sestavy/Number of assembly/Nummer der Baugruppe; Verze (Ver.)/Version/Version; Nazev sestavy/Assembly title/Name der Baugruppe; Pozice (Poz.)/Position/Position; Objednaci cislo/Purchase order number/Bestellnummer; Nazev polozky/Volume title/Name der Position; Rozmer/Stock size/Abmessung

7.12. Konzola otočná/ Turnable consol/ Drehkonsole

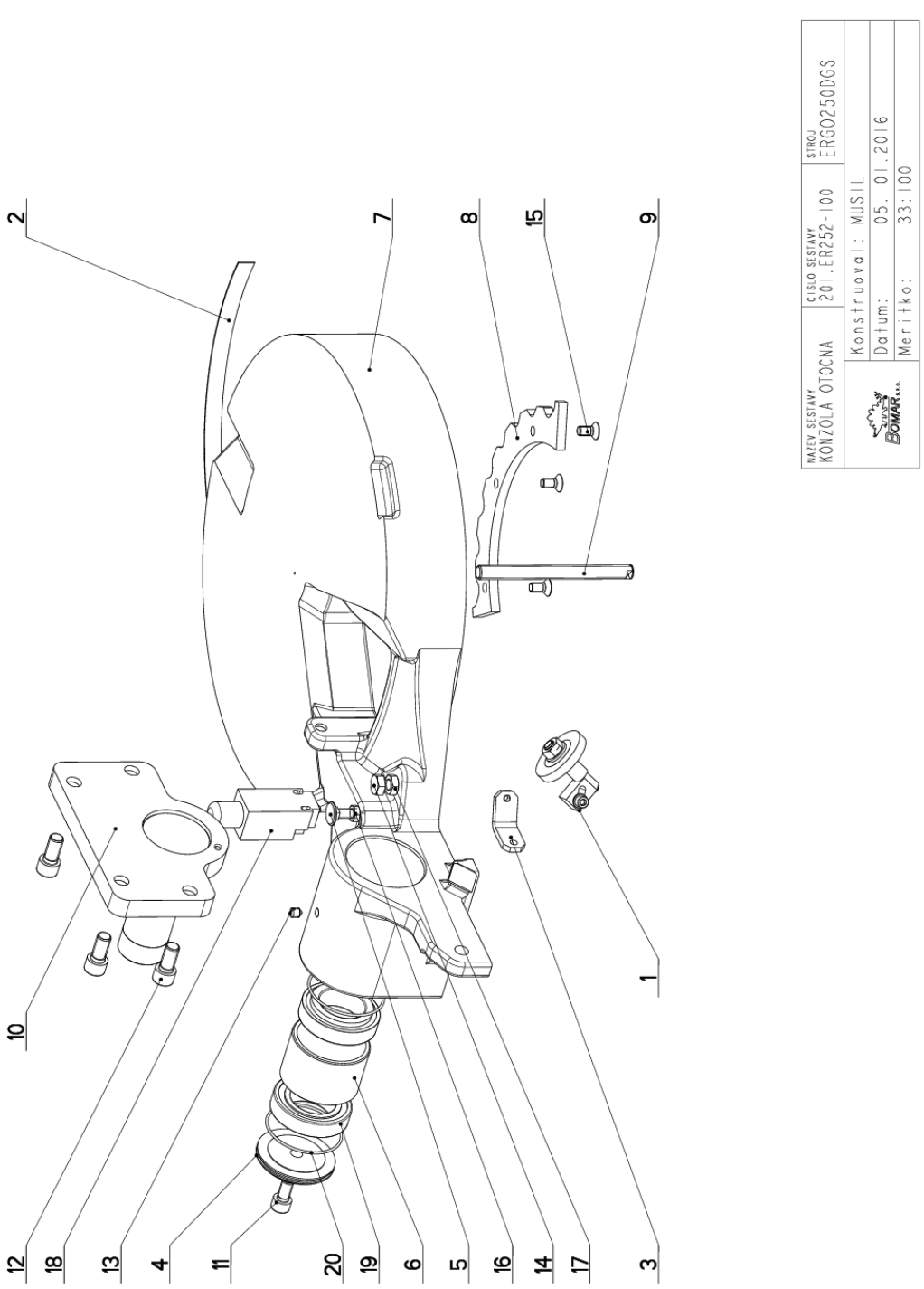

7.13. Kusovník / Piece list / Stückliste – Konzola otočná/ Turnable consol/ Drehkonsole

Cislo Sestavy	Ver.	Nazev sestavy
201.ER252-100	0	KONZOLA OTOCNA/TURNABLE CONSOL/DREHKONSOLE

Poz.	Objednaci cislo	Ver.	Nazev polozky	Rozmer	Ks
1	201.0704-100	0	KARTAC / BRUSH / BÜRSTE		1
2	30.0502-605	0	MERITKO / MEASURE / SKALA	P 0.5 x15	1
3	30.0514-603	0	DRZAK / HOLDER / HALTER	P 5x20	1
4	30.0702-012	0	VIKO / COVER / DECKEL	d 70	1
5	30.0702-013	0	SROUB / BOLT / SCHRAUBE	M8	1
6	30.8002-403	0	POUZDRO / SLEEVE / BÜCHSE	TR 70x5	1
7	30.ER252-101	0	KONZOLA OTOCNA / TURNABLE CONSOL / DREHKONSOLE		1
8	30.ER252-102	0	SEGMENT / SEGMENT / SEGMENT	P 8x105	1
9	30.ER252-103	0	SROUB / BOLT / SCHRAUBE	M12	1
10	30.ER252-114	0	KONZOLA / CONSOLE / KONSOLE		1
11	90.001.25.046	0	SROUB IMBUS / ALLEN HEAD BOLT / IMBUSSCHRAUBE	M10X20	1
12	90.001.25.057	0	SROUB IMBUS / ALLEN HEAD BOLT / IMBUSSCHRAUBE	M12x25	4
13	90.003.20.010	0	SROUB STAVECI / ADJUSTMENT BOLT / STELLSCHRAUBE	SROUB M8X10	1
14	90.005.55.024	0	SROUB 6HRANNY / 6 SIDED BOLT / SECHSKANTSCHRAUBE	SROUB M10X25	1
15	90.011.27.012	0	SROUB ZAPUSTNY / COUNTERSINK BOLT / SENKSCHRAUBE	SROUB M8X16	3
16	90.101.55.001	0	MATICE / NUT / MUTTER	MATICE M8	1
17	90.101.55.002	0	MATICE / NUT / MUTTER	MATICE M10	1
18	91.173.007	0	SPINAC KONCOVY / END SWITCH / ENDSCHALTER		1
19	95.300.002	0	LOZISKO KUZELIK / BEARING / LAGER	32008AX	2
20	96.001.018	0	TESNENI / SEALING / DICHTUNG		2

Cislo Sestavy/Number of assembly/Nummer der Baugruppe; Verze (Ver.)/Version/Version; Nazev sestavy/Assembly title/Name der Baugruppe; Pozice (Poz.)/Position/Position; Objednaci cislo/Purchase order number/Bestellnummer; Nazev polozky/Volume title/Name der Position; Rozmer/Stock size/Abmessung

7.14. Kartáč/ Brush/ Bürste

Cislo Sestavy	Ver.	Nazev sestavy
201.0704-100	0	KARTAC/BRUSH/BÜRSTE

Poz.	Objednaci cislo	Ver.	Nazev polozky	Rozmer	Ks
1	30.0104-022	0	DRZAK / HOLDER / HALTER	HR 16x16	1
2	30.0704-029	0	HRIDEL / SHAFT / WELLE	d 14	1
3	31.0704-031	0	KARTAC / BRUSH / BÜRSTE		1
4	90.150.50.006	0	PODLOZKA DIN125 / WASHER / UNTERLEGSCHEIBE	PODLOZKA 10,5	1
5	90.100.55.006	0	MATICE / NUT / MUTTER	MATICE - M10	1
6	90.150.50.004	0	PODLOZKA / WASHER / UNTERLEGSCHEIBE	PODLOZKA 6,4	1
7	95.800.001	0	KROUZEK POJIST.VNEJS / OUTSIDE SAFETY RING / SICHERUNGSRING AUßEN	POJISTNY KROUZEK 6	1
8	90.001.25.019	0	SROUB IMBUS CERNENY / ALLEN HEAD BOLT / IMBUSSCHRAUBE	M6X25	1

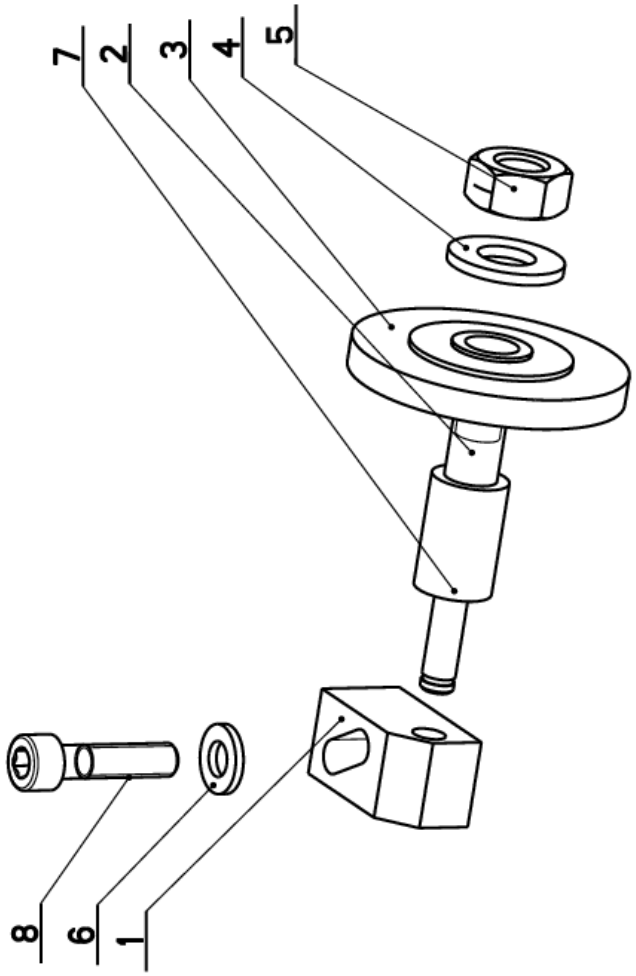

7.15. Rozvaděč elektro / Electro distributor / Schaltschrank

Cislo Sestavy
201.ER2530-010

Ver.
0

Nazev sestavy
ROZVADEC ELEKTRO/ELECTRO DISTRIBUTOR/SCHALTSCHRANK

Poz.	Objednaci cislo	Ver.	Nazev polozky	Rozmer	Ks
1	201.0513-340	1	OVLADACI PANEL / CONTROL PANEL / BEDIENPULT		1
2	30.0513-304	4	PANEL / PANEL / PANEL	P 1,5x314	1
3	30.ER2530-011	0	ROZVADEC ELEKTRO / ELECTRO DISTRIBUTOR / SCHALTSCHRANK		1
4	30.ER2530-012	0	VIKO / COVER / DECKEL		1
5	91.071.022	0	VYVODKA / BUSHING / TÜLLE		1
6	91.072.016	0	MATICE / NUT / MUTTER		1

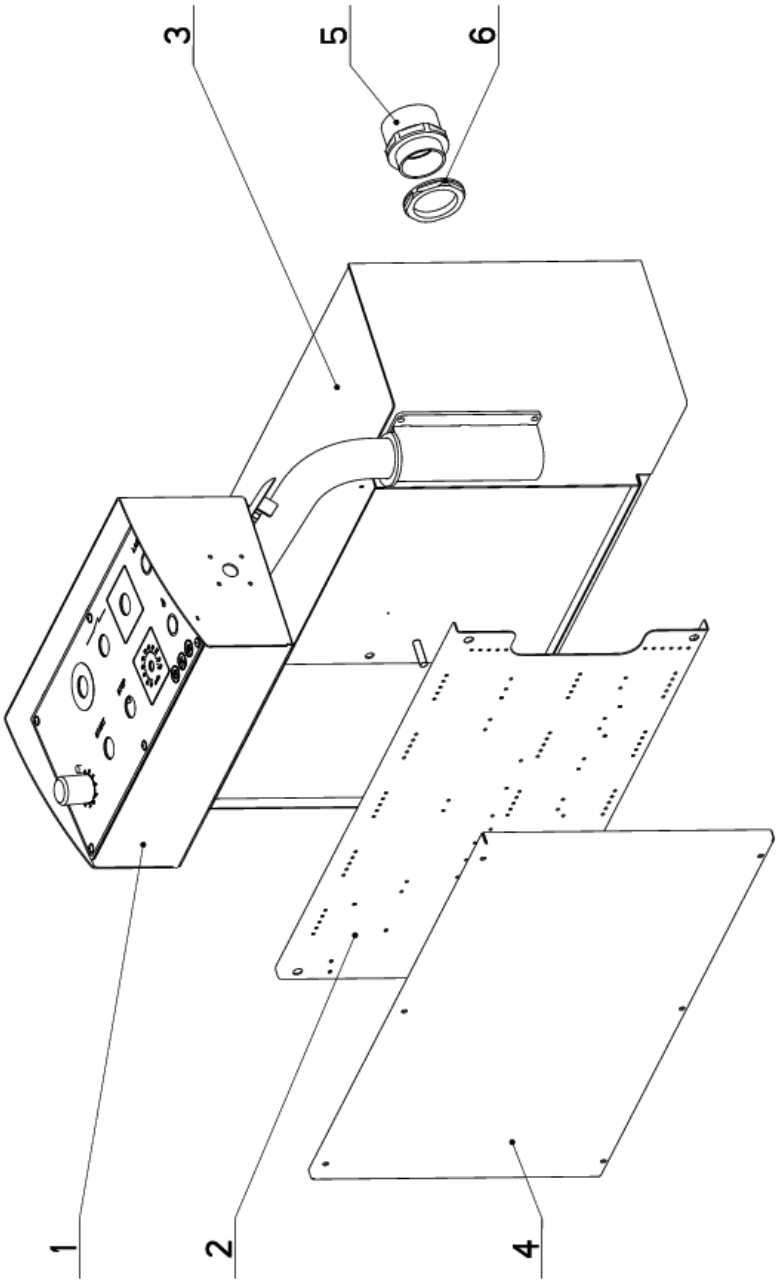

Cislo Sestavy/Number of assembly/Nummer der Baugruppe; Verze (Ver.)/Version/Version; Nazev sestavy/Assembly title/Name der Baugruppe; Pozice (Poz.)/Position/Position;
Objednaci cislo/Purchase order number/Bestellnummer; Nazev polozky/Volume title/Name der Position; Rozmer/Stock size/Abmessung

7.16. Ovládací panel / Control panel / Bedienpult

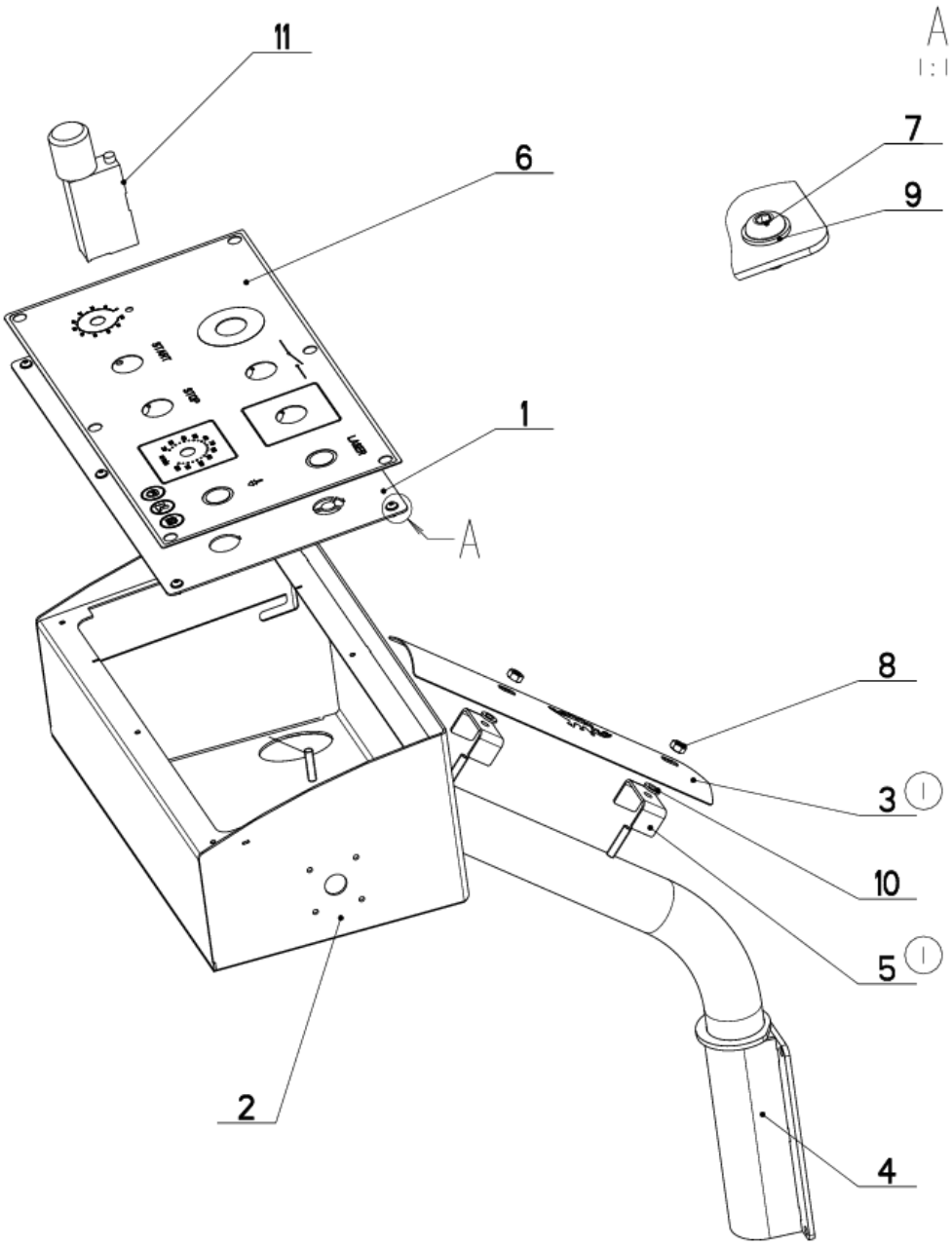

NAZEV SESTAVY	CISLO SESTAVY	STROJ
OVLADACI PANEL	201.0513-340	ERG.258/278SDG
BOMAR	Konstruoval: FABER	
	Datum: 10. 11.2016	
	Meritko: 1:4	

7.17. Kusovník / Piece list / Stückliste
Ovládací panel / Control panel / Bedienpult

Cislo Sestavy	Ver.	Nazev sestavy
201.0513-340	1	OVLADACI PANEL/CONTROL PANEL/BEDIENPULT

Poz.	Objednaci cislo	Ver.	Nazev polozky	Rozmer	Ks
1	30.0513-241	0	OVLADACI PANEL / CONTROL PANEL / BEDIENPULT		1
2	30.0513-320	0	NOHA / LEG / STANDER		1
3	30.0513-344 (1)	0	KRYT / COVER / ABDECKUNG	P 1x64	1
4	30.2814-607	2	DRZAK / HOLDER / HALTER		1
5	30.ER2530-308 (1)	0	DRZAK / HOLDER / HALTER	P 2x20	2
6	31.0513-404	0	SAMOLEPKA / STICKER / AUFKLEBER		1
7	90.013.27.001	0	SROUB / BOLT / SCHRAUBE	M4x8	6
8	90.100.55.004	0	MATICE / NUT / MUTTER	MATICE _ M6	2
9	90.150.50.002	0	PODLOZKA / WASHER / UNTERLEGSCHEIBE	PODLOZKA 4,3	6
10	90.150.50.004	0	PODLOZKA / WASHER / UNTERLEGSCHEIBE	PODLOZKA 6,4	2
11	92.152.001	0	VENTIL SKRTICI / CHOKE VALVE / DROSSELVENTIL	VS01-04/R 2.5-0	1

1.ZRUS.DRZAK 30.9307-109 A NAHR.30.ER2530-308,PRID.KRYT 30.0513-344. 155/ZM365 10.11.2016 SLEZACKOVA

Cislo Sestavy/Number of assembly/Nummer der Baugruppe; Verze (Ver.)/Version/Version; Nazev sestavy/Assembly title/Name der Baugruppe; Pozice (Poz.)/Position/Position; Objednaci cislo/Purchase order number/Bestellnummer; Nazev polozky/Volume title/Name der Position; Rozmer/Stock size/Abmessung

7.18. Rameno/ Saw arm/ Sägerahmen

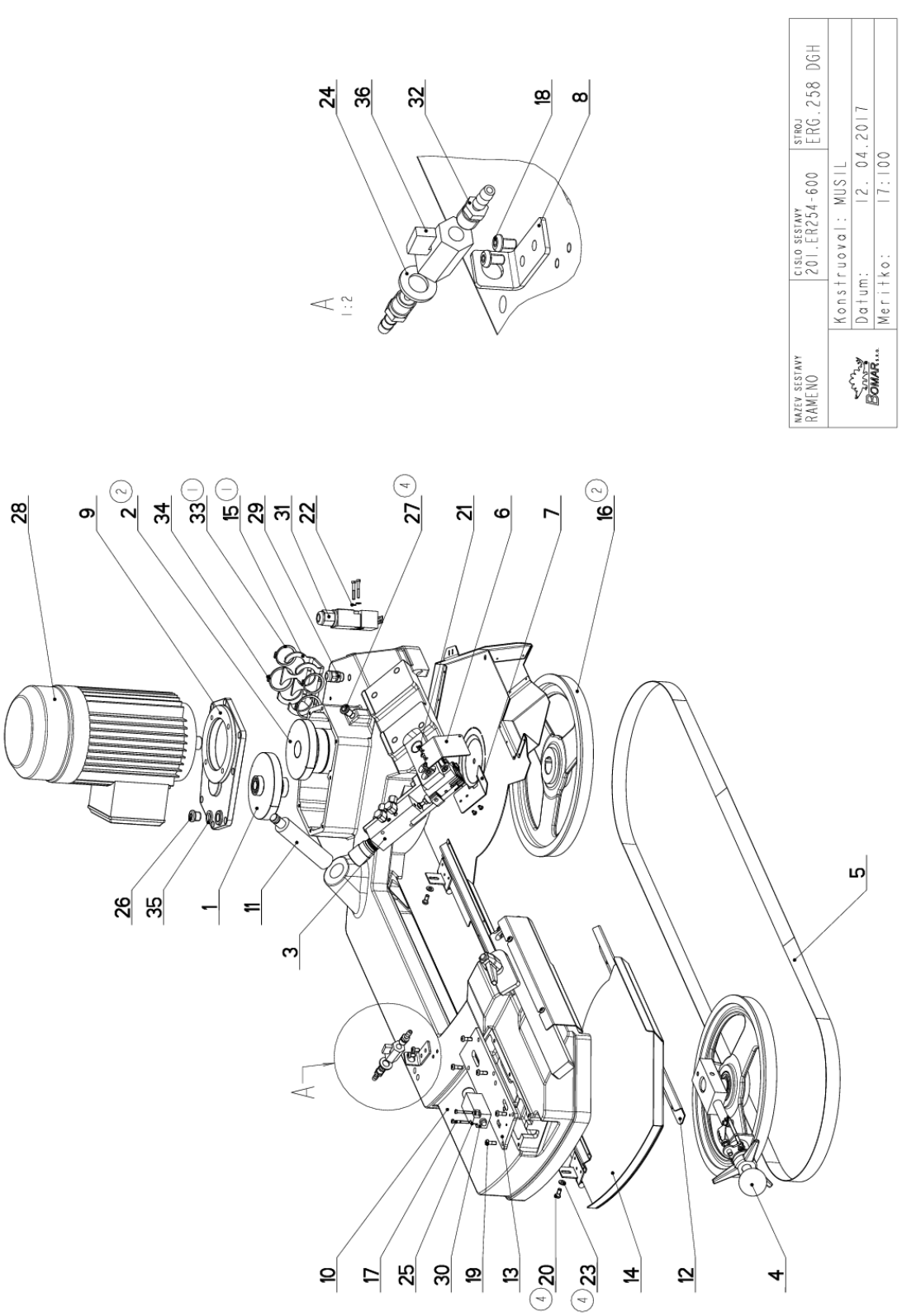

7.19. Kusovník / Piece list / Stückliste – Rameno/ Saw arm/ Sägerahmen

Cislo Sestavy	Ver.	Nazev sestavy
201.ER254-600	4	RAMENO/SAW ARM/SÄGERAHMEN

Poz.	Objednaci cislo	Ver.	Nazev polozky	Rozmer	Ks
1	201.ER235-020	0	POHON / DRIVE / ANTRIEB		1
2	201.ER235-110 (2)	0	POHON / DRIVE / ANTRIEB		1
3	201.ER256-200	1	VEDENI PASU / BELT GUIDE / SÄGEBANDFÜHRUNG		1
4	201.ER258-000	0	NAPINANI / TENSIONING / SPANNUNG		1
5	30.0504-961	0	PAS PILOVY / SAW BELT / SÄGEBAND	2910x25(7)x0.9	1
6	30.0704-038	0	KRYT PASU / BELT COVER / BANDABDECKUNG	P 1.5x60	1
7	30.0704-044	0	KRYT PASU / BELT COVER / BANDABDECKUNG	P 1.5x56	1
8	30.1814-011	2	DRZAK / HOLDER / HALTER	P 3x76	1
9	30.ER234-002	0	VIKO / COVER / DECKEL		1
10	30.ER254-001	6	RAMENO / SAW ARM / SÄGERAHMEN		1
11	30.ER254-003	1	CEP / LUG / BOLZEN	d 30	1
12	30.ER254-004	1	KRYT RAMENE / SHOULDER COVER / RAHMENABDECKUNG	P 1,5x61	1
13	30.ER254-007	1	KRYT NAPINANI / TENSIONING COVER / BANDSPANNUNGSABDECKUNG	P 6x80	1
14	30.ER254-305	1	KRYT RAMENE / SHOULDER COVER / RAHMENABDECKUNG		1
15	30.ER254-408 (1)	0	DRZAK / HOLDER / HALTER	P 4x100	1
16	30.ER265-601 (2)	0	KOLO HNACI / DRIVE WHEEL / ANTRIEBSRAD		1
17	90.012.50.007	0	SROUB / ROLLER BOLT / ZYLINDERSCHRAUBE	SROUB M4X30	4
18	90.013.27.007	0	SROUB PULKULATY / HALF ROUND BOLT / HALBRUNDSCHRAUBE	M6X10	2
19	90.013.27.008	0	SROUB PULKULATY / HALF ROUND BOLT / HALBRUNDSCHRAUBE	M6X16	6
20	90.013.27.012 (4)	0	SROUB PULKULATY / HALF ROUND BOLT / HALBRUNDSCHRAUBE	M6X14	2
21	90.013.27.017	0	SROUB PULKULATY / HALF ROUND BOLT / HALBRUNDSCHRAUBE	M4x6	4
22	90.150.50.002	0	PODLOZKA / WASHER / UNTERLEGSCHEIBE	PODLOZKA 4,3	2
23	90.150.50.004 (4)	0	PODLOZKA / WASHER / UNTERLEGSCHEIBE	PODLOZKA 6,4	2
24	90.150.50.007	0	PODLOZKA / WASHER / UNTERLEGSCHEIBE	PODLOZKA 13	1
25	90.152.50.005	0	PODLOZKA VEJIROVA / /	PODLOZKA 4,3	2
26	90.400.5Z.002	0	ZATKA / PLUG / STOPFEN	M16x1.5	1
27	90.400.5Z.004 (4)	0	ZATKA / PLUG / STOPFEN	M12x1,5	1
28	91.001.217	0	ELEKTROMOTOR / ELECTRIC MOTOR / ELEKTROMOTOR	90L-B14	1
29	91.070.011	0	VYVODKA / BUSHING / TÜLLE	M16x1.5	1
30	91.173.007	0	SPINAC KONCOVY / END SWITCH / ENDSCHALTER	-R1WK	1
31	91.173.012	0	SPINAC KONCOVY / END SWITCH / ENDSCHALTER		1
32	94.202.002 (1)	0	REDUKCE / REDUCTION / ADAPTOR / REDUKTION	GES 6/R1/4"	2

Cislo Sestavy/Number of assembly/Nummer der Baugruppe; Verze (Ver.)/Version/Version; Nazev sestavy/Assembly title/Name der Baugruppe; Pozice (Poz.)/Position/Position; Objednaci cislo/Purchase order number/Bestellnummer; Nazev polozky/Volume title/Name der Position; Rozmer/Stock size/Abmessung

7.20. Rameno/ Saw arm/ Sägerahmen

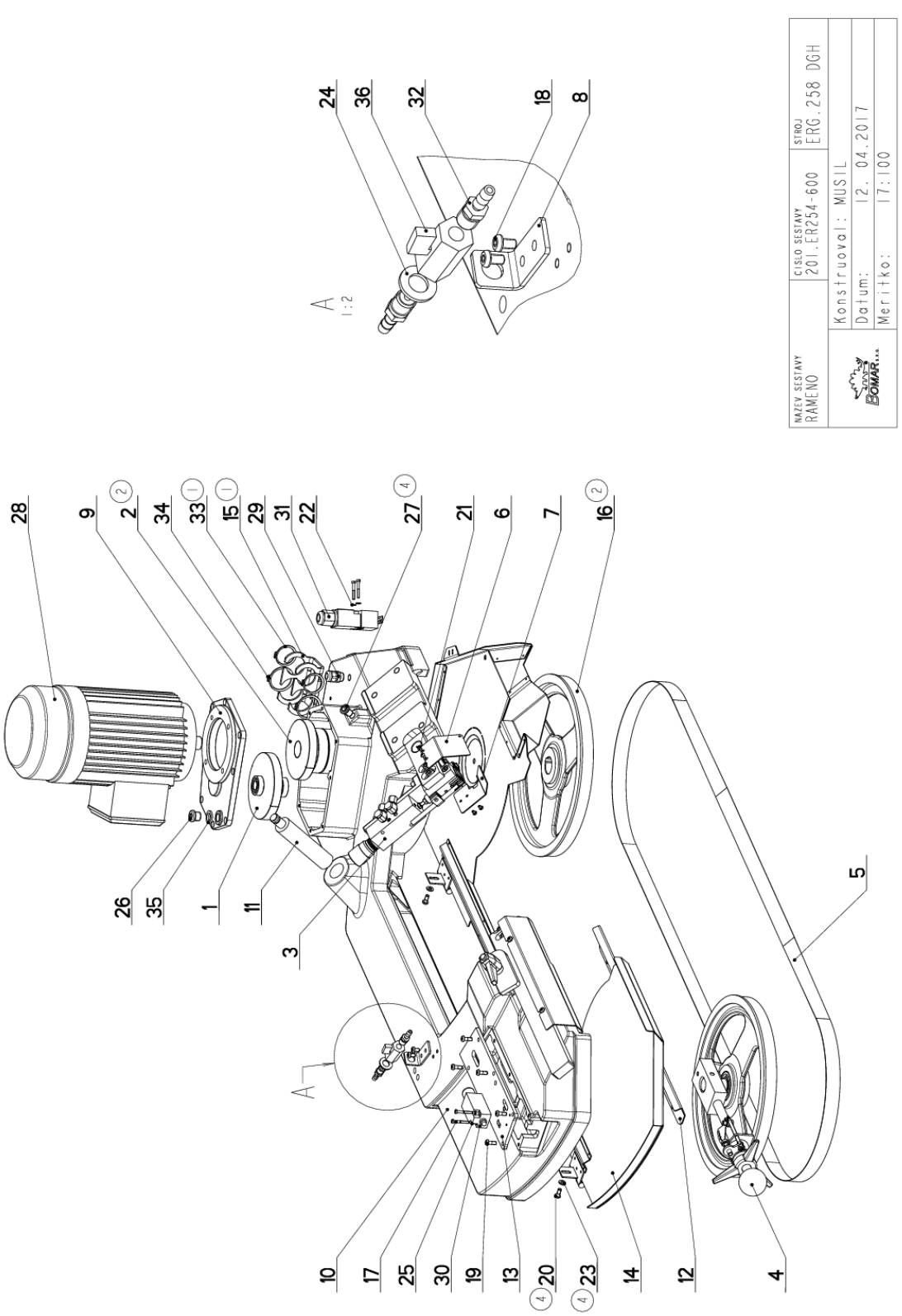

7.21. Kusovník / Piece list / Stückliste – Rameno/ Saw arm/ Sägerahmen

33	95.800.014	0	SEGR HRIDEL. / SAFETY RING / SICHERUNGSRING	POJISTNY KROUZEK 35	2
34	95.800.016	0	SEGR HRIDEL. / SAFETY RING / SICHERUNGSRING	POJISTNY KROUZEK 42	2
35	96.081.001	0	KROUZEK TESNICI / SEAL RING / DICHTUNGSRING	23x15x3	1
36	99.260.003	0	VENTIL / VALVE / VENTIL	1/4"	1

1.ZRUS.DRZAK 30.ER254-008 A NAHR.30.ER254-408,PRID.2xPOJ.KROUZEK 95.800.014. 155/ZM281 9.9.2016 SLEZACKOVA

2.ZRUS.POHON 201.ER235-010 A NAHR.201.ER235-110,ZRUS.KOLO 30.ER255-001 A NAHR.30.ER265-601. 321/ZM020 11.1.2017 SLEZACKOVA

3.ZRUS.SOUCASTI 30.ER234-008,30.ER254-011,95.802.003 A NAHR.30.BC234-004-2 V KRYTU 30.ER254-305. 067/ZM088 10.3.2017 SLEZACKOVA

4.ZRUS.ZATKA M10x1(90.400.5Z.001) A NAHR.M12x1,5(90.400.5Z.004),PRID.2xPODLOZKA 6,4(90.150.50.004),2xSROUB M6x14 (90.013.27.012).021/ZM147 12.4.2017 SLEZACKOVA

Cislo Sestavy/Number of assembly/Nummer der Baugruppe; Verze (Ver.)/Version/Version; Nazev sestavy/Assembly title/Name der Baugruppe; Pozice (Poz.)/Position/Position; Objednaci cislo/Purchase order number/Bestellnummer; Nazev polozky/Volume title/Name der Position; Rozmer/Stock size/Abmessung

7.22. Pohon/ Drive/ Antrieb

Cislo Sestavy
201.ER235-020

Ver.
POHON

Nazev sestavy
POHON/DRIVE /ANTRIEB

Poz.	Objednaci cislo	Ver.	Nazev polozky	Rozmer	Ks
1	30.ER235-021	0	KOLO OZUBENE / COG WHEEL / ZAHNRAD		1
2	95.001.029	0	LOZISKO / BEARING / LAGER	6003 2RS	2

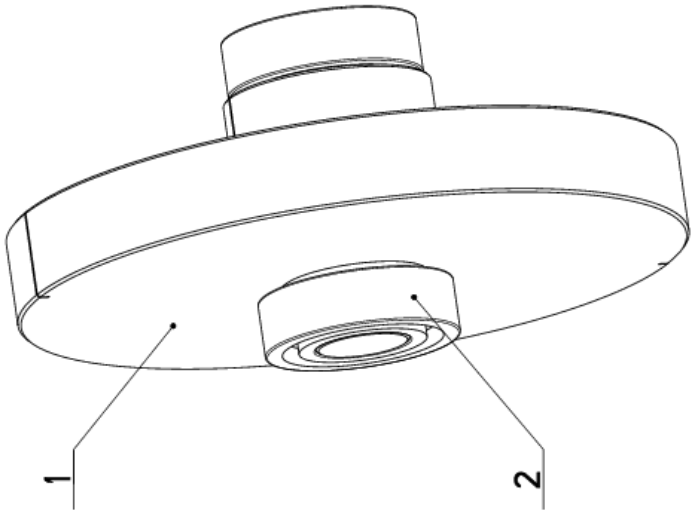

7.23. Pohon/ Drive/ Antrieb

Cislo Sestavy	Ver.	Nazev sestavy
201.ER235-110	0	POHON/DRIVE /ANTRIEB

Poz.	Objednaci cislo	Ver.	Nazev polozky	Rozmer	Ks
1	30.0508-002	0	PODLOZKA / WASHER / UNTERLEGSCHEIBE	d 40	1
2	30.ER235-012	0	KROUZEK / RING / RING	Tr 45x5	1
3	30.ER235-013	0	KROUZEK / RING / RING	Tr 80x5	1
4	30.ER235-111	0	KOLO OZUBENE / COG WHEEL / ZAHNRAD		1
5	30.ER235-114	0	VIKO / COVER / DECKEL	D80h6	1
6	30.ER235-115	0	KROUZEK / RING / RING	D 40	1
7	90.011.27.008	0	SROUB ZAPUSTNY / COUNTERSINK BOLT / SENKSCHRAUBE	SROUB M10X20	1
8	95.001.026	0	LOZISKO / BEARING / LAGER	6307 2RS	1
9	95.201.010	0	LOZISKO / BEARING / LAGER	VALECKOVA L. IRADA	1
10	95.800.013	0	SEGR HRIDEL. / OUTSIDE SAFETY RING / SICHERUNGSRING AUSSEN	POJISTNY KROUZEK 30	1
11	95.801.013	0	SEGR DIRA / INSIDE SAFETY RING / SICHERUNGSRING INNEN	POJISTNY KROUZEK 80	2
12	95.810.015	0	PERO / SPRING / FEDER	PERO 8x7x30	1
13	95.830.017	0	GUFERO / GIT SEAL / DICHTUNG	GUFERO 40x52x7	1
14	96.002.016	0	KROUZEK O DYNAMICKY / DYNAMIC O RING / O-RING DYNAMISCH	32X2	1
15	96.002.030	0	KROUZEK O DYNAMICKY / DYNAMIC O RING / O-RING DYNAMISCH	74x3	1

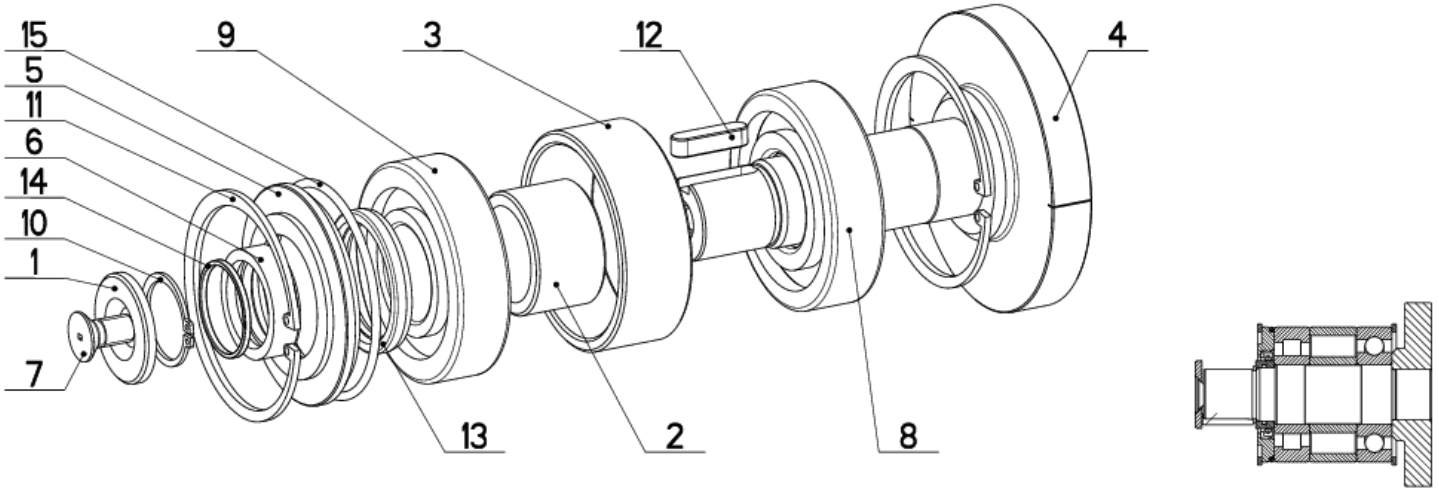

Cislo Sestavy/Number of assembly/Nummer der Baugruppe; Verze (Ver.)/Version/Version; Nazev sestavy/Assembly title/Name der Baugruppe; Pozice (Poz.)/Position/Position; Objednaci cislo/Purchase order number/Bestellnummer; Nazev polozky/Volume title/Name der Position; Rozmer/Stock size/Abmessung

7.24. Vedení pásu/ Belt guide/ Sägebandführung

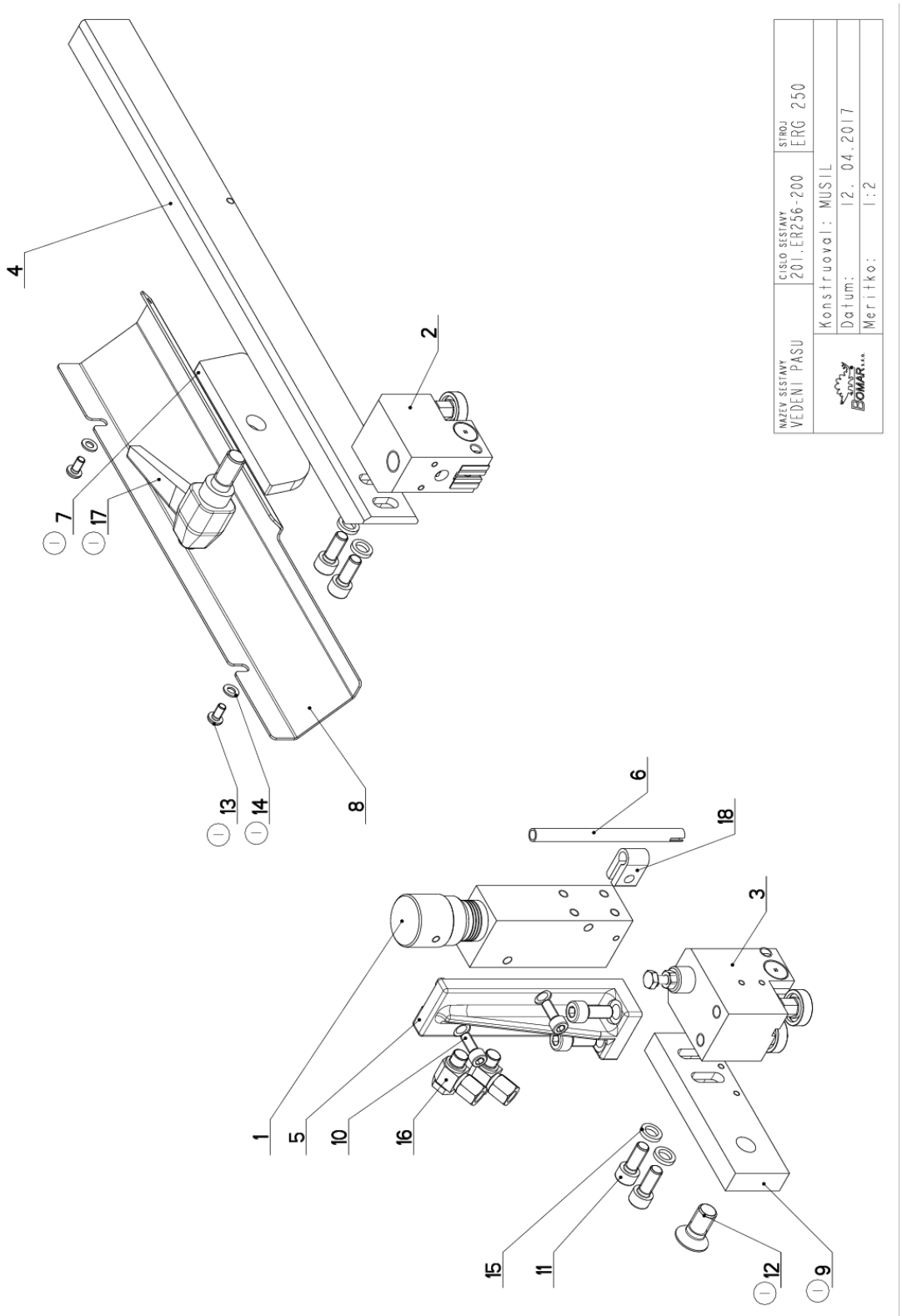

7.25. Kusovník / Piece list / Stückliste – Vedení pásu/ Belt guide/ Sägebandführung

Cislo Sestavy	Ver.	Nazev sestavy
201.ER256-200	1	VEDENI PASU/BELT GUIDE/SÄGEBANDFÜHRUNG

Poz.	Objednaci cislo	Ver.	Nazev polozky	Rozmer	Ks
1	251.218	0	REGULACE PRITLAKU / PRESSURE REGULATION / SCHNITTDRUCKREGULATION		1
2	201.0110-100	0	KOSTKA VODICI / LEAD CUBE / FÜHRUNGSKLOTZ		1
3	201.2810-200	1	KOSTKA VODICI / LEAD CUBE / FÜHRUNGSKLOTZ		1
4	30.0104-015	5	LISTA / TRIM / LEISTE	HR 40x20	1
5	30.2804-001	0	DRZAK / HOLDER / HALTER		1
6	30.3510-004	0	TRUBKA / TUBE / ROHR	TR 8x 1	1
7	30.ER256-001 (1)	0	UPINKA / FASTENER / SPANNEISEN	P 8x40	1
8	30.ER256-005	1	KRYT PASU / BELT COVER / BANDABDECKUNG	P 1,5x94	1
9	30.FL256-002 (1)	0	LISTA / TRIM / LEISTE	HR 40x15	1
10	90.001.25.017	0	SROUB IMBUS / ALLEN HEAD BOLT / IMBUSSCHRAUBE	M6X16	2
11	90.001.25.032	0	SROUB IMBUS / ALLEN HEAD BOLT / IMBUSSCHRAUBE	8x20	6
12	90.011.27.025 (1)	0	ZAPUSTNY IMBUS / COUNTERSINK BOLT / SENKSCHRAUBE	SROUB M12X25	1
13	90.013.27.003 (1)	0	SROUB / BOLT / SCHRAUBE	M5X10	2
14	90.150.50.003 (1)	0	PODLOZKA / WASHER / UNTERLEGSCHEIBE	PODLOZKA 5,3	2
15	90.163.00.002	0	PODLOZKA / WASHER / UNTERLEGSCHEIBE	NORD-LOCK	4
16	92.003.104	0	SROUBENI UHLOVE / ANGLE BOLTING / WINKELVERSCHRAUBUNG	607002	2
17	94.008.008	0	PAKA UPINACI / ATTACHMENT LEVER / SPANNHEBEL	M12x25	1
18	94.204.001	0	DRZAK / HOLDER / HALTER		1

1.ZRUS.UPINKA 30.ER256-003 A NAHR.30.ER256-001,ZRUS.LISTA 30.ER236-002 A NAHR.30.FL256-002,ZRUS.PAKA UTAHOVACI M10x25 (94.008.005) A NAHR.PAKA UTAHOVACI M12x25(94.008.008),PRID.2xPODLOZKA 5,3(90.150.50.003),2xSROUB M5x10(90.013.27.003), 1xSROUB M12X25(90.011.27.025). 021/ZM147 12.4.2017 SLEZACKOVA

Cislo Sestavy/Number of assembly/Nummer der Baugruppe; Verze (Ver.)/Version/Version; Nazev sestavy/Assembly title/Name der Baugruppe; Pozice (Poz.)/Position/Position; Objednaci cislo/Purchase order number/Bestellnummer; Nazev polozky/Volume title/Name der Position; Rozmer/Stock size/Abmessung

7.26. Kostka vodící/ Lead cube/ Führungsklotz

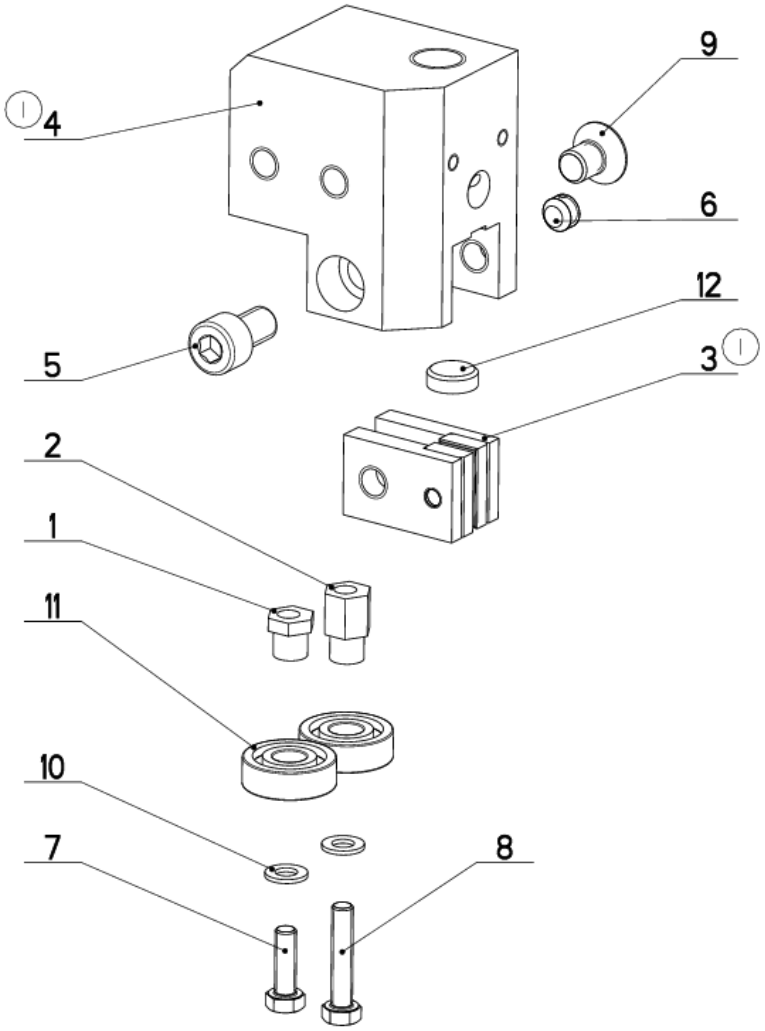

NAZEV SESTAVY	CISLO SESTAVY	STROJ
KOSTKA VODICI	201.0110-100	STG-240
BOMAR	Konstruoval:	
	Datum: 28. 04.2015	
	Meritko: 4:5	

7.27. Kusovník / Piece list / Stückliste – Kostka vodící/ Lead cube/ Führungsklotz

Cislo Sestavy	Ver.	Nazev sestavy
201.0110-100	0	KOSTKA VODICI/LEAD CUBE/FÜHRUNGSKLOTZ

Poz.	Objednaci cislo	Ver.	Nazev polozky	Rozmer	Ks
1	30.0104-018	0	EXCENTR / CAM / EXZENTER	SK10	1
2	30.0104-019	0	EXCENTR / CAM / EXZENTER	SK10	1
3	30.0104-021 (1)	0	DRZAK / HOLDER / HALTER		2
4	30.0104-032 (1)	2	KOSTKA VODICI / LEAD CUBE / FÜHRUNGSKLOTZ	TYC 60x40	1
5	90.001.25.030	0	SROUB IMBUS / ALLEN HEAD BOLT / IMBUSSCHRAUBE	M8X14	1
6	90.002.20.009	0	SROUB STAVECI / ADJUSTMENT BOLT / STELLSCHRAUBE	SROUB M8X6	1
7	90.005.55.003	0	SROUB 6HRANNY / 6 SIDED BOLT / SECHSKANTSCHRAUBE	SROUB M5X16	1
8	90.005.55.005	0	SROUB 6HRANNY / 6 SIDED BOLT / SECHSKANTSCHRAUBE	SROUB M5X25	1
9	90.011.27.007	0	ZAPUSTNY IMBUS / COUNTERSINK BOLT / SENKSCHRAUBE	SROUB M8X12	1
10	90.150.50.003	0	PODLOZKA / WASHER / UNTERLEGSCHEIBE	PODLOZKA 5,3	2
11	95.001.001	0	LOZISKO / BEARING / LAGER	608 2RS	2
12	99.040.002	0	TVRDOKOV / HARD METAL / HM-SEGMENT	d 12	1

1.ZRUS.KOSTKA 30.0104-017 A NAHR.30.0104-032,ZRUS.DRZAK 30.0104-020 A NAHR. 30.0104-021. 297/272 12.8.2008 KRPEC

Cislo Sestavy/Number of assembly/Nummer der Baugruppe; Verze (Ver.)/Version/Version; Nazev sestavy/Assembly title/Name der Baugruppe; Pozice (Poz.)/Position/Position; Objednaci cislo/Purchase order number/Bestellnummer; Nazev polozky/Volume title/Name der Position; Rozmer/Stock size/Abmessung

7.28. Kostka vodící/ Lead cube/ Führungsklotz

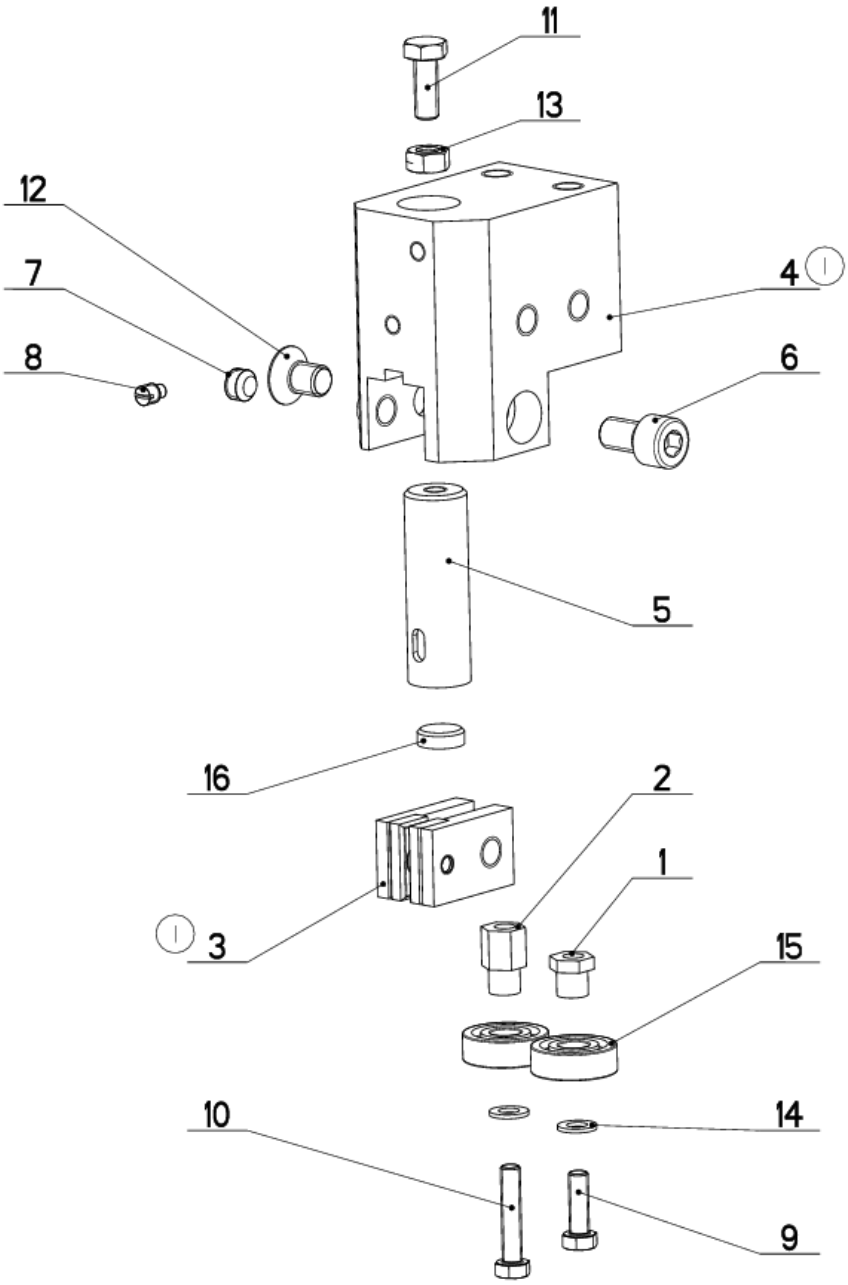

NAZEV SESTAVY	CISLO SESTAVY	STROJ
KOSTKA VODICI	201.2810-200	STG 240A/GA

BOMAR	Konstruoval:
	Datum: 21. 07.2016
	Meritko: 7:10

7.29. Kusovník / Piece list / Stückliste – Kostka vodící/ Lead cube/ Führungsklotz

Cislo Sestavy	Ver.	Nazev sestavy
201.2810-200	1	KOSTKA VODICI/LEAD CUBE/FÜHRUNGSKLOTZ

Poz.	Objednaci cislo	Ver.	Nazev polozky	Rozmer	Ks
1	30.0104-018	0	EXCENTR / CAM / EXZENTER	SK10	1
2	30.0104-019	0	EXCENTR / CAM / EXZENTER	SK10	1
3	30.0104-021 (1)	0	DRZAK / HOLDER / HALTER		2
4	30.2804-012 (1)	2	KOSTKA VODICI / /	HR 60x40	1
5	30.3510-002	1	DRZAK TVRDOKOVU / POA HOLDER / HM-HALTER	TYC 16	1
6	90.001.25.030	0	SROUB IMBUS / ALLEN HEAD BOLT / IMBUSSCHRAUBE	M8X14	1
7	90.002.20.009	0	SROUB STAVECI / ADJUSTMENT BOLT / STELLSCHRAUBE	SROUB M8X6	1
8	90.004.20.017	0	SROUB STAVECI / ADJUSTMENT BOLT / STELLSCHRAUBE	SROUB M5X8	1
9	90.005.55.003	0	SROUB 6HRANNY / 6 SIDED BOLT / SECHSKANTSCHRAUBE	SROUB M5X16	1
10	90.005.55.005	0	SROUB 6HRANNY / 6 SIDED BOLT / SECHSKANTSCHRAUBE	SROUB M5X25	1
11	90.005.55.007	0	SROUB 6HRANNY / 6 SIDED BOLT / SECHSKANTSCHRAUBE	SROUB M6X16	1
12	90.011.27.007	0	SROUB ZAPUSTNY / COUNTERSINK BOLT / SENKSCHRAUBE	SROUB M8X12	1
13	90.100.55.004	0	MATICE / NUT / MUTTER	MATICE _ M6	1
14	90.150.50.003	0	PODLOZKA / WASHER / UNTERLEGSCHEIBE	PODLOZKA 5,3	2
15	95.001.001	0	LOZISKO / BEARING / LAGER	608 2RS	2
16	99.040.002	0	TVRDOKOV / HARD METAL / HM-SEGMENT	d 12	1

1.ZRUS.KOSTKA 30.2804-002 A NAHR.30.2804-012,ZRUS.DRZAK 30.0104-020 A NAHR.201.0104-021. 340/ZM343 16.10.2008 SLEZACKOVA

Cislo Sestavy/Number of assembly/Nummer der Baugruppe; Verze (Ver.)/Version/Version; Nazev sestavy/Assembly title/Name der Baugruppe; Pozice (Poz.)/Position/Position;
Objednaci cislo/Purchase order number/Bestellnummer; Nazev polozky/Volume title/Name der Position; Rozmer/Stock size/Abmessung

7.30. Napínání/ Tensioning/ Spannung

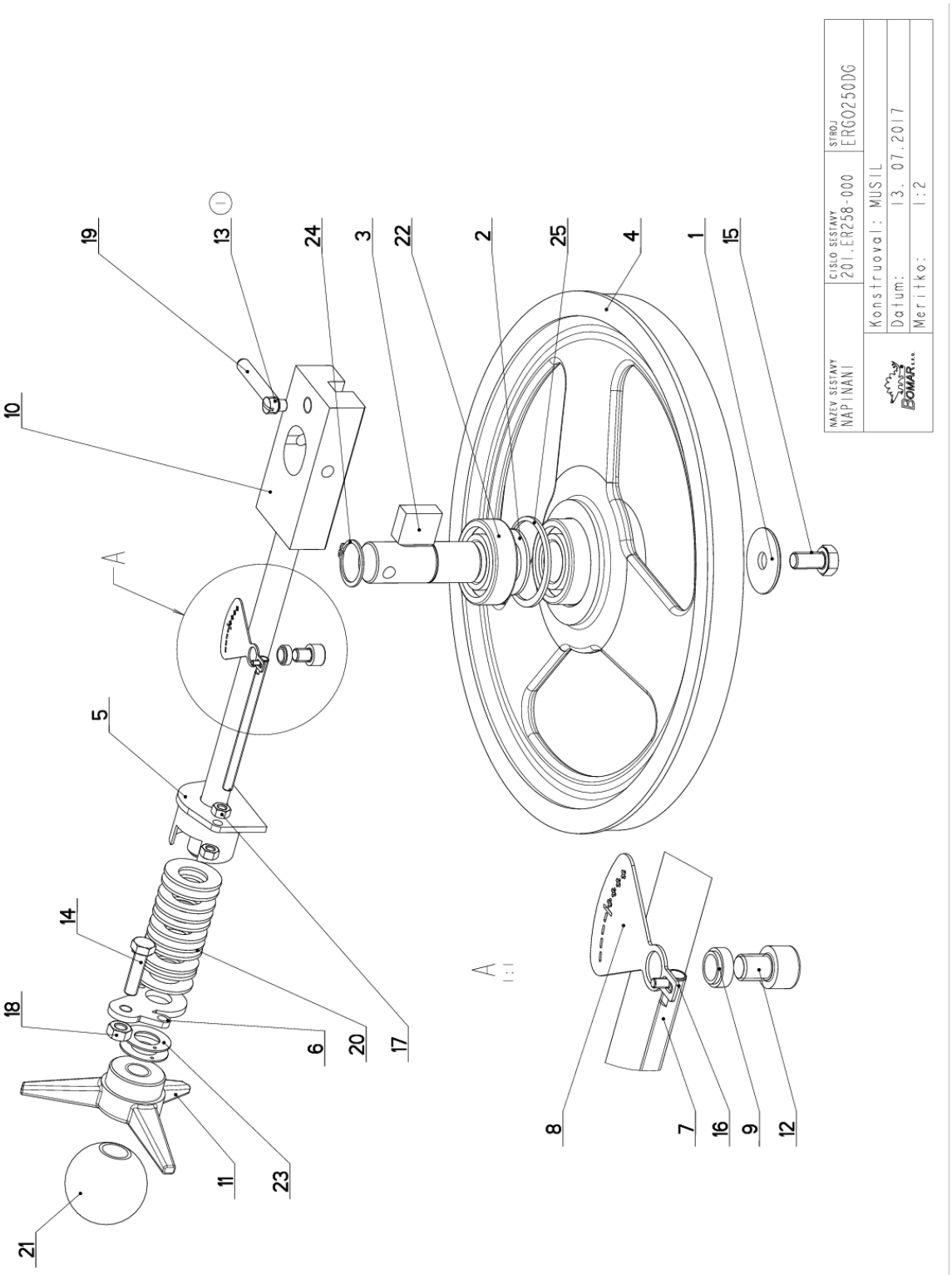

7.31. Kusovník / Piece list / Stückliste – Napínání/ Tensioning/ Spannung

Cislo Sestavy	Ver.	Nazev sestavy
201.ER258-000	1	NAPINANI/TENSIONING/SPANNUNG

Poz.	Objednaci cislo	Ver.	Nazev polozky	Rozmer	Ks
1	30.0505-011	0	PODLOZKA / WASHER / UNTERLEGSCHEIBE	TYC 40	1
2	30.0702-023	0	KROUZEK DISTANCNI / DISTANCE RING / DISTANZRING	P 2x40	1
3	30.0708-102	0	CEP NAPINANI / TENSIONING LUG / SPANNUNGSBOLZEN		1
4	30.ER258-001	0	KOLO NAPINACI / TENSIONING WHEEL / UMLENKRAD		1
5	30.ER258-004	0	DRZAK / HOLDER / HALTER		1
6	30.ER258-005	0	PRILOZKA / STRAP / LASCHE	P 4x42	1
7	30.ER258-006	0	TAHLO / GUY ROD / ZUGSTANGE	M6	1
8	30.ER258-007	0	STUPNICE / SCALE / SKALA	P 1x41	1
9	30.ER258-008	0	TRUBKA / TUBE / ROHR	TR 12x2	1
10	30.ER258-011	1	VEDENI / GUIDE / BACKENFÜHRUNG		1
11	31.0104-006	0	HVEZDICE / STAR WHEEL / STERN	PLAST	1
12	90.001.25.028	0	SROUB IMBUS / ALLEN HEAD BOLT / IMBUSSCHRAUBE	M8X10	1
13	90.004.2D.026 (1)	0	SROUB STAVECI / ADJUSTMENT BOLT / STELLSCHRAUBE	SROUB M10X14	1
14	90.005.55.017	0	SROUB 6HRANNY / 6 SIDED BOLT / SECHSKANTSCHRAUBE	SROUB M8X30	1
15	90.005.55.023	0	SROUB 6HRANNY / 6 SIDED BOLT / SECHSKANTSCHRAUBE	SROUB M10X20	1
16	90.012.50.019	0	SR. S VALC. HLAV. / ROLLER BOLT / ZYLINDERSCHRAUBE	SROUB M3X6	1
17	90.100.55.004	0	MATICE / NUT / MUTTER	M6	2
18	90.100.55.005	0	MATICE / NUT / MUTTER	MATICE _ M8	1
19	90.300.0Z.012	0	KOLIK VALC. KAL. / CYLINDRICAL PIN TEMPERED / ZYLINDERSTIFT GEHARTET	KOLIK 8X50	1
20	90.350.0Z.002	0	PRUZINA TALIROVA / DISC SPRING / TELLERFEDER	35,5X18,3X2,0X2,8	11
21	94.001.005	0	RUKOJET / HANDLE / GRIFF	M16	1
22	95.001.018	0	LOZISKO / BEARING / LAGER	6205 2RS	2
23	95.750.001	0	KROUZEK KU / KU RING / KU-RING	16x1	2
24	95.800.012	0	SEGR HRIDEL. / OUTSIDE SAFETY RING / SICHERUNGSRING AUSSEN	POJISTNY KROUZEK 25	1
25	95.801.009	0	SEGR DIRA / INSIDE SAFETY RING / SICHERUNGSRING INNEN	POJISTNY KROUZEK 52	1

1.ZRUS.SROUB M8x10 90.004.2D.007 A NAHR. M10x14 90.004.2D.026. 169/ZM237 13.7.2017 CERNY

Cislo Sestavy/Number of assembly/Nummer der Baugruppe; Verze (Ver.)/Version/Version; Nazev sestavy/Assembly title/Name der Baugruppe; Pozice (Poz.)/Position/Position; Objednaci cislo/Purchase order number/Bestellnummer; Nazev polozky/Volume title/Name der Position; Rozmer/Stock size/Abmessung

7.32. Válec zvedací/ Lifting cylinder/ Hebezylinder

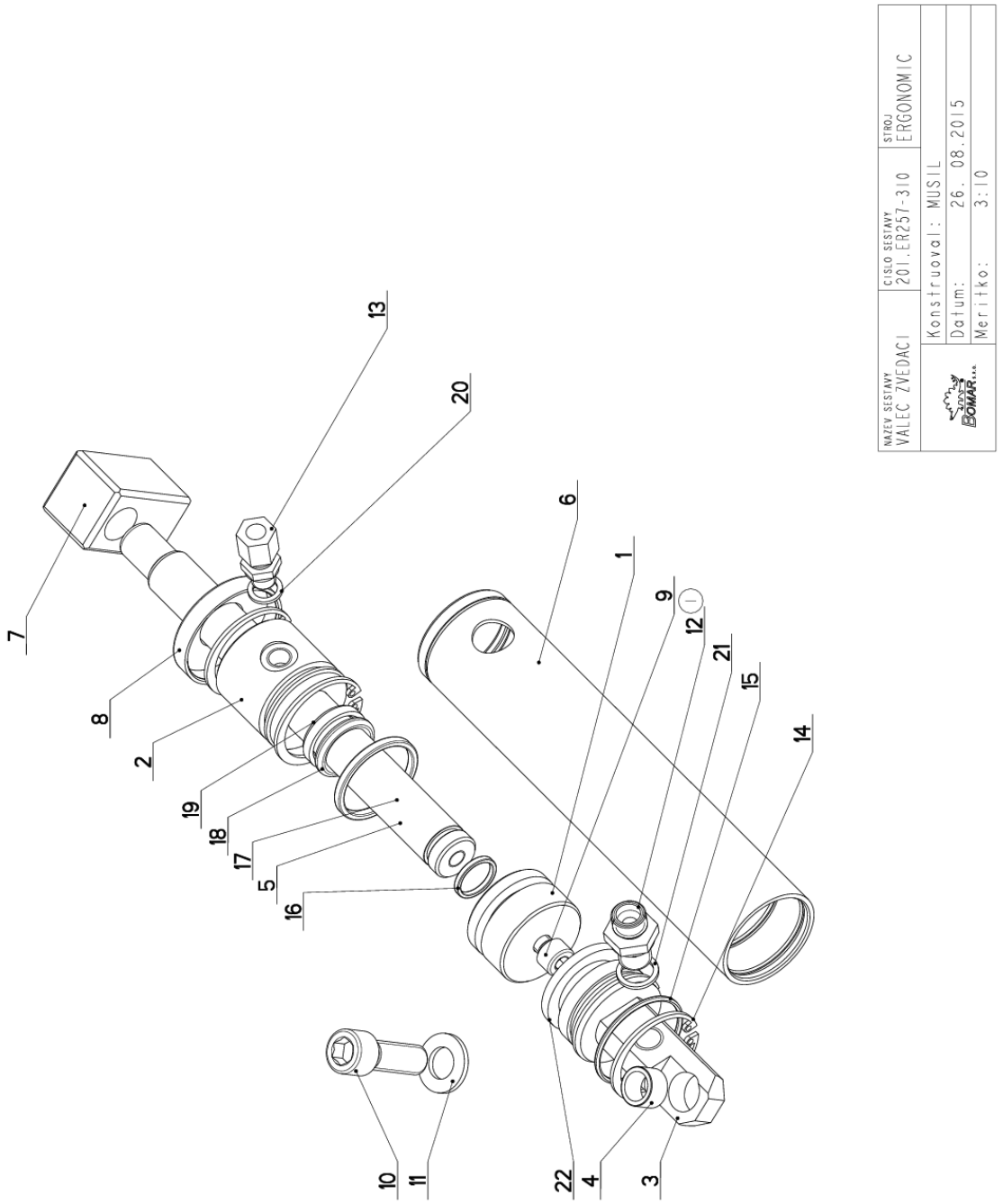

7.33. Kusovník / Piece list / Stückliste – Válec zvedací/ Lifting cylinder/ Hebezylinder

Cislo Sestavy	Ver.	Nazev sestavy
201.ER257-310	1	VALEC ZVEDACI/LIFTING CYLINDER/HEBEZYLINDER

Poz.	Objednaci cislo	Ver.	Nazev polozky	Rozmer	Ks
1	30.0507-902	0	PIST / PISTON / KOLBEN	d 45	1
2	30.0507-903	2	VIKO / COVER / DECKEL	TYC 45	1
3	30.0507-904	1	VIKO / COVER / DECKEL	d 40	1
4	30.0507-913	3	POUZDRO / SLEEVE / BÜCHSE	d 16	1
5	30.ER257-303	1	PISTNICE / PISTON ROD / KOLBENSTANGE	d20	1
6	30.ER257-311	0	VALEC / ROLLER / ZYLINDER	TR 45/40H8	1
7	30.LC07-002	1	DRZAK / HOLDER / HALTER	HR 30x30	1
8	31.0507-905	0	VIKO / COVER / DECKEL		1
9	90.001.25.032	0	SROUB IMBUS / ALLEN HEAD BOLT / IMBUSSCHRAUBE	8x20	1
10	90.001.25.059	0	SROUB IMBUS / ALLEN HEAD BOLT / IMBUSSCHRAUBE	M12X35	1
11	90.150.50.007	0	PODLOZKA / WASHER / UNTERLEGSCHEIBE	PODLOZKA 13	1
12	92.002.003	0	SROUBENI PRIME / DIRECT BOLTING / GERADE VERSCHRAUBUNG		1
13	92.002.102	0	SROUBENI / BOLTING / VERSCHRAUBUNG	S-GEV-8LLR	1
14	95.801.005	0	SEGR DIRA / INSIDE SAFETY RING / SICHERUNGSRING INNEN	POJISTNY KROUZEK 40	4
15	96.001.010	0	O-KROUZEK STATIC / STATIC O RING / O-RING STATISCH	36X2	1
16	96.002.007	0	KROUZEK O DYNAMICKY / DYNAMIC O RING / O-RING DYNAMISCH	16x2 NBR 70SH	1
17	96.002.017	0	KROUZEK O DYNAMICKY / DYNAMIC O RING / O-RING DYNAMISCH	34x3 NBR 70SH	1
18	96.041.002	0	MANZETA TESNICI / /	20/28x4	1
19	96.060.002	0	KROUZEK STIRACI / SCRAPER RING / ABSTREIFRING	TK 20x28	1
20	96.082.001	0	KROUZEK TESNICI / SEAL RING / DICHTUNGSRING	10/14x1.5 CU	1
21	96.082.002	0	TESNENI / SEAL RING / DICHTUNGSRING	13/17x1.5 CU	1
22	96.900.015	0	TESNENI PISTU / /	PT0200400-T46N	1

Cislo Sestavy/Number of assembly/Nummer der Baugruppe; Verze (Ver.)/Version/Version; Nazev sestavy/Assembly title/Name der Baugruppe; Pozice (Poz.)/Position/Position; Objednaci cislo/Purchase order number/Bestellnummer; Nazev polozky/Volume title/Name der Position; Rozmer/Stock size/Abmessung

7.34. Doraz/ Stop piece/ Anschlag

Cislo Sestavy
201.ER259-120

Ver.
1

Nazev sestavy
DORAZ/STOP PIECE/ANSCHLAG

Poz.	Objednaci cislo	Ver.	Nazev polozky	Rozmer	Ks
1	30.0514-601	2	DORAZ / STOP PIECE / ANSCHLAG	d 16	1
2	30.0703-016	1	PAKA / LEVER / HEBEL	d6	1
3	30.0703-010.A	1	TYC / POLE / STANGE	d 25	1
4	30.ER259-123	0	TELESO DORAZU / STOP BODY / ANSCHLAGKÖRPER	ODLITEK	1
5	31.0304-013	0	PRUZINA / SPRING / FEDER	2.5x21.5x60x7	1
6	90.300.02.006	0	KOLIK VALC. KAL. / CYLINDRICAL PIN TEMPERED / ZYLINDERSTIFT GEHARTET	KOLIK 6X32	1
7	94.001.001	0	RUKOJET / HANDLE / GRIFF	M6 PRUMER 16	1
8	94.006.001	0	SROUB / BOLT / SCHRAUBE	M8x17	1
9	99.120.001 (1)	0	PRAVITKO / RULER / SKALENBANDMAß	0,5m	1

1.PRIDANO PRAVITKO 99.120.001. 135/ZM173 7.6.2016 SLEZACKOVA

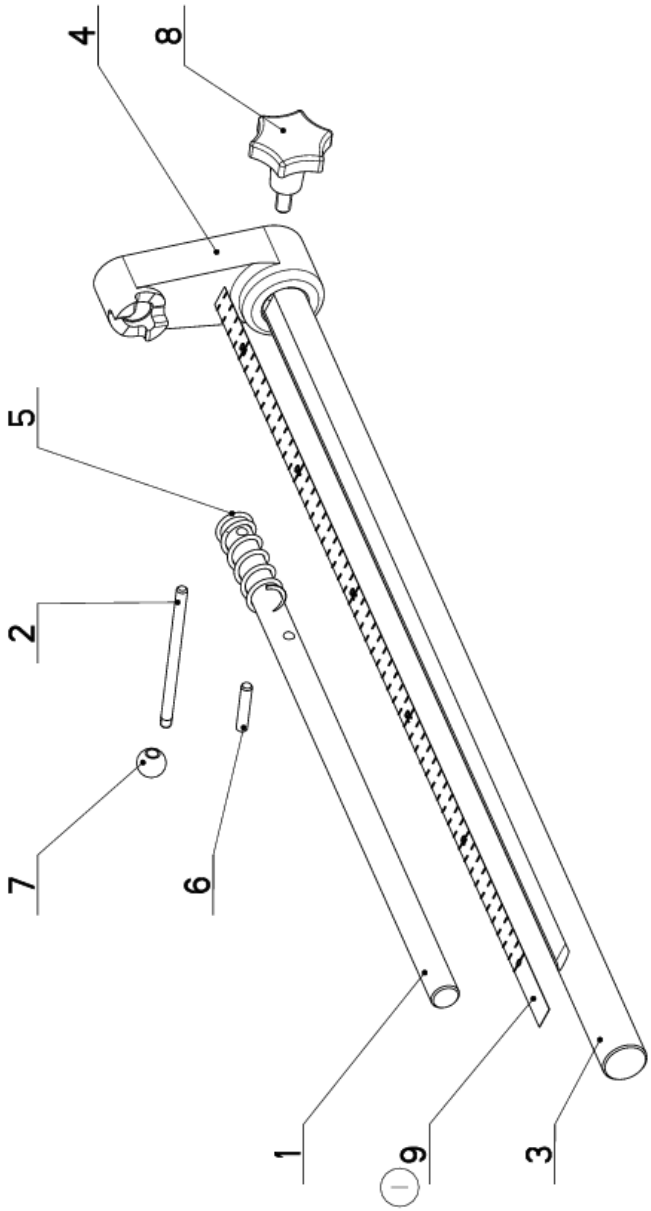

Cislo Sestavy/Number of assembly/Nummer der Baugruppe; Verze (Ver.)/Version/Version; Nazev sestavy/Assembly title/Name der Baugruppe; Pozice (Poz.)/Position/Position;
Objednaci cislo/Purchase order number/Bestellnummer; Nazev polozky/Volume title/Name der Position; Rozmer/Stock size/Abmessung

7.35. Stůl/ Table/ Tisch

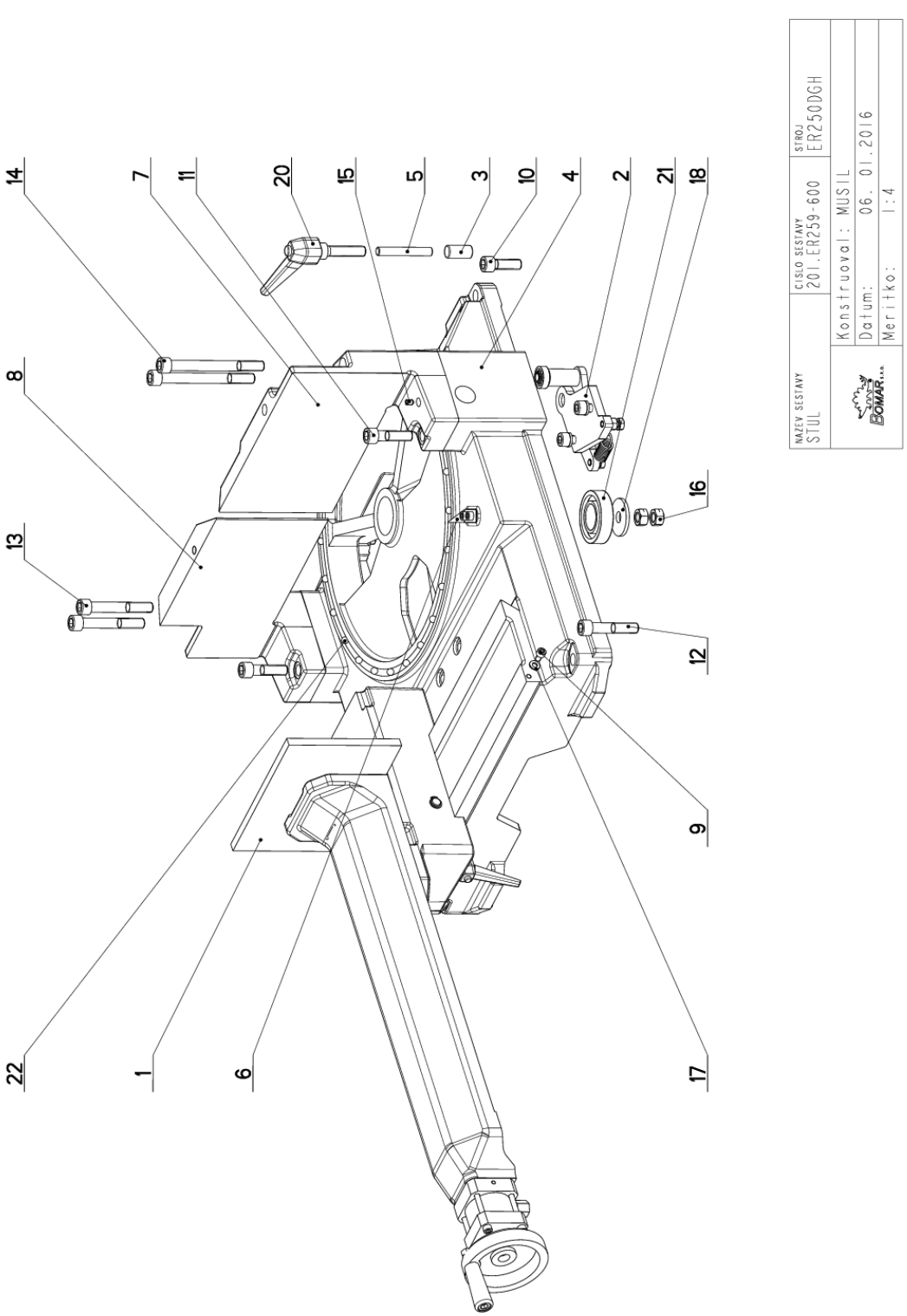

7.36. Kusovník / Piece list / Stückliste – Stůl/ Table/ Tisch

Cislo Sestavy	Ver.	Nazev sestavy
201.ER259-600	0	STUL/TABLE/TISCH

Poz.	Objednaci cislo	Ver.	Nazev polozky	Rozmer	Ks
1	201.ER253-610	0	SVERAK / VICE / SCHRAUBSTOCK		1
2	201.ER259-110	0	DORAZ / STOP PIECE / ANSCHLAG		1
3	30.0509-606	0	VALECEK / CYLINDER / ROLLE	d15	1
4	30.ER259-101	0	STUL / TABLE / TISCH		1
5	30.ER259-102	0	TYC / POLE / STANGE	d10	1
6	30.ER259-103	0	UKAZATEL / INDICATOR / ZEIGER	P 1x15	1
7	30.ER259-114	0	CELIST / JAW / BACKE	ODLITEK	1
8	30.ER259-115	0	CELIST / JAW / BACKE	ODLITEK	1
9	90.001.25.015	0	SROUB IMBUS / ALLEN HEAD BOLT / IMBUSSCHRAUBE	M6X10	4
10	90.001.25.059	0	SROUB IMBUS / ALLEN HEAD BOLT / IMBUSSCHRAUBE	M12X35	2
11	90.001.25.061	0	SROUB IMBUS / ALLEN HEAD BOLT / IMBUSSCHRAUBE	M12X45	2
12	90.001.25.063	0	SROUB IMBUS / ALLEN HEAD BOLT / IMBUSSCHRAUBE	M12X60	2
13	90.001.25.065	0	SROUB IMBUS / ALLEN HEAD BOLT / IMBUSSCHRAUBE	M12X80	2
14	90.001.25.066	0	SROUB IMBUS / ALLEN HEAD BOLT / IMBUSSCHRAUBE	M12X120	2
15	90.003.20.004	0	SROUB STAVECI / ADJUSTMENT BOLT / STELLSCHRAUBE	SROUB M6X10	1
16	90.100.55.007	0	MATICE / NUT / MUTTER	MATICE _ M12	2
17	90.150.50.004	0	PODLOZKA / WASHER / UNTERLEGSCHEIBE	PODLOZKA 6,4	2
18	90.151.50.002		PODLOZKA / WASHER / UNTERLEGSCHEIBE	PODLOZKA 12	1
19	90.350.02.006		TALIROVA PRUZINA / /	40x20.4x1	8
20	94.008.009	0	PAKA UPINACI / ATTACHMENT LEVER / SPANNHEBEL	M12	1
21	95.014.008	0	LOZISKO / BEARING / LAGER	7206	1
22	95.691.006	0	KOLECKO / WHEEL / ROLLE	RB 8	25

Cislo Sestavy/Number of assembly/Nummer der Baugruppe; Verze (Ver.)/Version/Version; Nazev sestavy/Assembly title/Name der Baugruppe; Pozice (Poz.)/Position/Position; Objednaci cislo/Purchase order number/Bestellnummer; Nazev polozky/Volume title/Name der Position; Rozmer/Stock size/Abmessung

7.37. Svěrák/ Vice/ Schraubstock

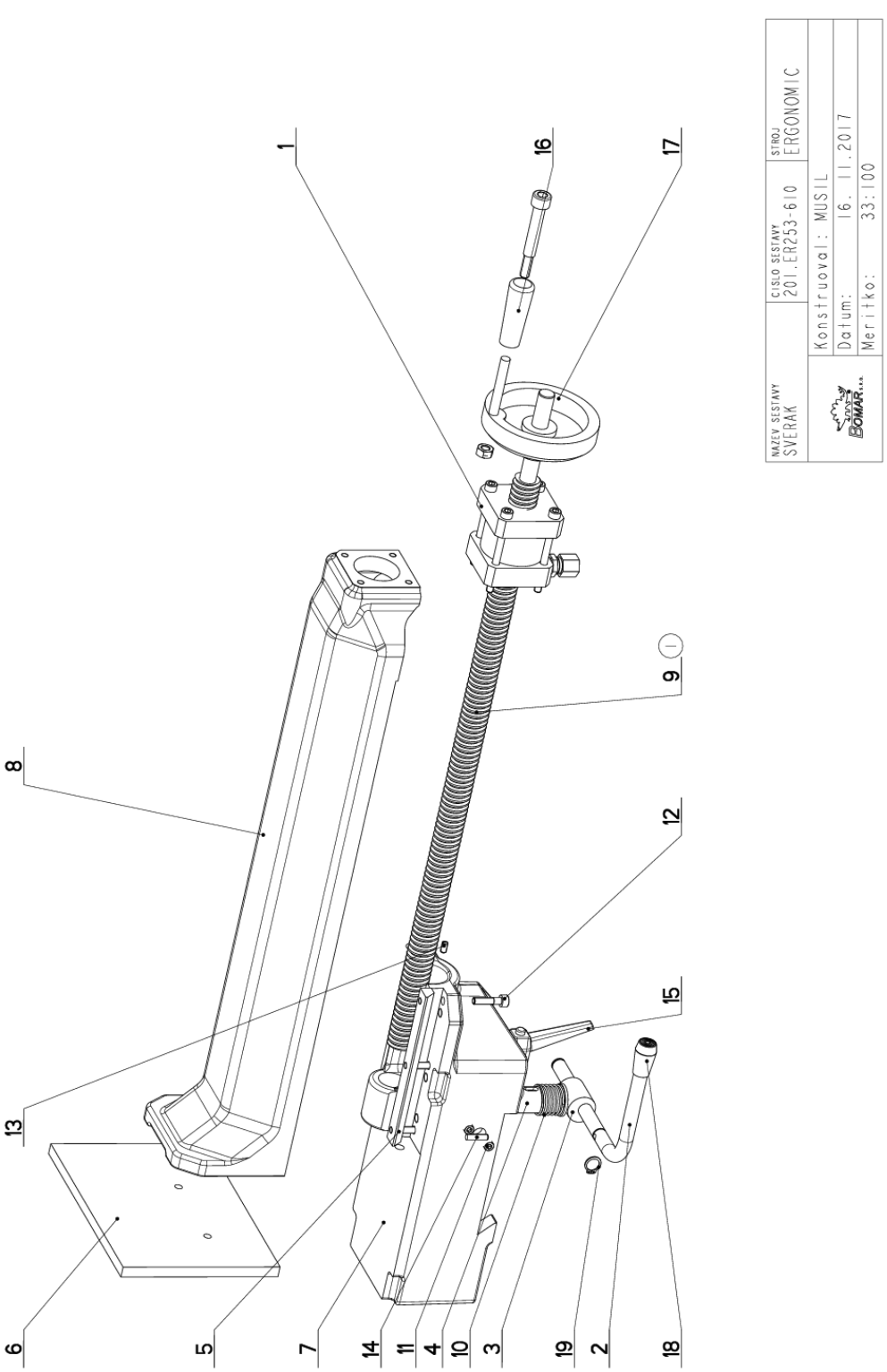

7.38. Kusovník / Piece list / Stückliste – Svěrák/ Vice/ Schraubstock

Cislo Sestavy	Ver.	Nazev sestavy
201.ER253-610	1	SVERAK/VICE/SCHRAUBSTOCK

Poz.	Objednaci cislo	Ver.	Nazev polozky	Rozmer	Ks
1	201.ER257-660	1	VALEC / ROLLER / ZYLINDER		1
2	30.ER233-013	1	TYC / POLE / STANGE	d 12	1
3	30.ER233-014	1	EXCENTR / CAM / EXZENTER	d 25	1
4	30.ER233-015	3	CEP / LUG / BOLZEN	D 30	1
5	30.ER233-217	1	KLIN / WEDGE / KEIL	HR 15x10	1
6	30.ER253-116	0	DESKA / BOARD / PLATTE	HR 200x10	1
7	30.ER253-211	0	TELESO SVERAKU / VICE BODY / SCHRAUBSTOCKKÖRPER		1
8	30.ER253-612	1	CELIST POHYBLIVA / MOVING JAW / BEWEGLICHE BACKE		1
9	31.ER253-018 (1)	0	SROUB / BOLT / SCHRAUBE	TR 24x5 R	1
10	31.M203-012	0	PRUZINA / SPRING / FEDER	d 1.5x25x47x7,5	1
11	90.001.25.007	0	SROUB IMBUS / ALLEN HEAD BOLT / IMBUSSCHRAUBE	M5X10	2
12	90.001.25.019	0	SROUB IMBUS / ALLEN HEAD BOLT / IMBUSSCHRAUBE	M6X25	3
13	90.002.20.005	0	SROUB STAVECI / ADJUSTMENT BOLT / STELLSCHRAUBE	SROUB M5X10	1
14	90.303.02.008	0	KOLIK PRUZNY / PIN / BOLZEN	KOLIK 5X20	1
15	94.008.003	0	PAKA UPINACI / ATTACHMENT LEVER / SPANNHEBEL	M8x40	1
16	94.010.002	0	RUKOJET / HANDLE / GRIFF		1
17	94.010.004	0	KOLO / WHEEL / UMLENKRAD	d 100/14H7	1
18	94.102.024	0	RUKOJET / HANDLE / GRIFF	465367	1
19	95.800.004	0	SEGR HRIDEL. / OUTSIDE SAFETY RING / SICHERUNGSRING AUSSEN	POJISTNY KROUZEK 12	2

1.ZRUS.SROUB 30.ER253-018 A NAHR. 31.ER253-018.226/ZM364 16.11.2017 CERNY

Cislo Sestavy/Number of assembly/Nummer der Baugruppe; Verze (Ver.)/Version/Version; Nazev sestavy/Assembly title/Name der Baugruppe; Pozice (Poz.)/Position/Position; Objednaci cislo/Purchase order number/Bestellnummer; Nazev polozky/Volume title/Name der Position; Rozmer/Stock size/Abmessung

7.39. Válec/ Roller/ Zylinder

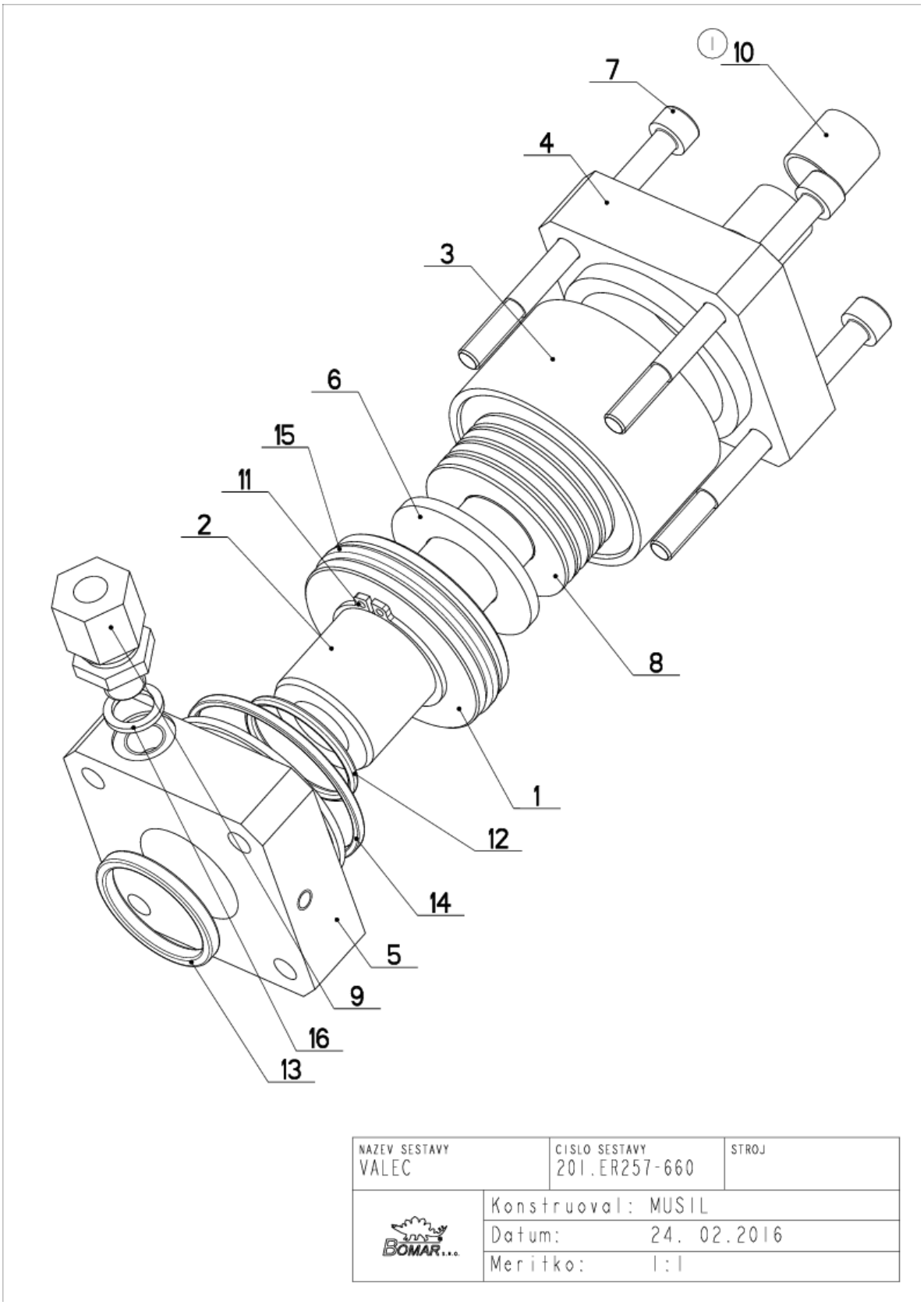

7.40. Kusovník / Piece list / Stückliste – Válec/ Roller/ Zylinder

Cislo Sestavy	Ver.	Nazev sestavy
201.ER257-660	1	VALEC/ROLLER/ZYLINDER

Poz.	Objednaci cislo	Ver.	Nazev polozky	Rozmer	Ks
1	30.ER257-661	0	PIST / PISTON / KOLBEN	d 55	1
2	30.ER257-662	1	PISTNICE / PISTON ROD / KOLBENSTANGE	d 28	1
3	30.ER257-663	0	VALEC / ROLLER / ZYLINDER	TR 55/50	1
4	30.ER257-664	0	VIKO / COVER / DECKEL	HR 60x60	1
5	30.ER257-665	0	VIKO / COVER / DECKEL	HR 60x60	1
6	30.ER257-666	0	PODLOZKA / WASHER / UNTERLEGSCHEIBE	P 3x40	1
7	90.001.25.099	0	SROUB IMBUS / ALLEN HEAD BOLT / IMBUSSCHRAUBE	M6X75	4
8	90.350.02.006	0	TALIROVA PRUZINA / /	40x20.4x1	8
9	92.002.109	0	SROUBENI / BOLTING / VERSCHRAUBUNG	P-GEV-8LR-1/8-WD	1
10	95.700.002 (1)	0	POUZDRO / SLEEVE / BÜCHSE	14X15	2
11	95.800.024	0	SEGR HRIDEL. / OUTSIDE SAFETY RING / SICHERUNGSRING AUSSEN	POJISTNY KROUZEK 28	2
12	96.001.047	0	KROUZEK O STATICKY / STATIC O RING / O-RING STATISCH	28x2 NBR 70SH	1
13	96.002.014	0	KROUZEK O DYNAMICKY / DYNAMIC O RING / O-RING DYNAMISCH	28X3	1
14	96.002.019	0	KROUZEK O DYNAMICKY / DYNAMIC O RING / O-RING DYNAMISCH	46x2 NBR 70SH	1
15	96.020.005	0	KROUZEK TESNICI / SEAL RING / DICHTUNGSRING	39.2X5.33	1
16	96.082.001	0	KROUZEK TESNICI / SEAL RING / DICHTUNGSRING	10/14x1.5 CU	1

1.PRIDANO 1xPOUZDRO 95.700.002. 276/ZM368 14.11.2016 SLEZACKOVA

Cislo Sestavy/Number of assembly/Nummer der Baugruppe; Verze (Ver.)/Version/Version; Nazev sestavy/Assembly title/Name der Baugruppe; Pozice (Poz.)/Position/Position; Objednaci cislo/Purchase order number/Bestellnummer; Nazev polozky/Volume title/Name der Position; Rozmer/Stock size/Abmessung

7.41. Doraz/ Stop piece/ Anschlag

Cislo Sestavy
201.ER259-110

Ver.
0

Nazev sestavy
DORAZ/STOP PIECE/ANSCHLAG

Poz.	Objednaci cislo	Ver.	Nazev polozky	Rozmer	Ks
1	30.ER259-112	0	DRZAK / HOLDER / HALTER		1
2	30.ER259-113	0	TYC DORAZU / STOP POLE / ANSCHLAGSTANGE		1
3	31.K303-021	0	PRUZINA / SPRING / FEDER	2.0x16x53x13.5	1
4	90.001.25.045	0	SROUB IMBUS / ALLEN HEAD BOLT / IMBUSSCHRAUBE	M10X16	2
5	90.005.55.013	0	SROUB 6HRANNY / 6 SIDED BOLT / SECHSKANTSCHRAUBE	SROUB M8X12	1
6	90.005.55.015	0	SROUB 6HRANNY / 6 SIDED BOLT / SECHSKANTSCHRAUBE	SROUB M8X20	1
7	90.100.55.005	0	MATICE / NUT / MUTTER	MATICE - M8	1
8	90.163.00.004	0	PODLOZKA / WASHER / UNTERLEGSCHEIBE	NORD-LOCK	2
9	95.001.004	0	LOZISKO / BEARING / LAGER	6000 2RS	1
10	95.800.003	0	SEGR HRIDEL. / OUTSIDE SAFETY RING / SICHERUNGSRING AUSSEN	POJISTNY KROUZEK 10	1
11	95.800.009	0	SEGR HRIDEL. / OUTSIDE SAFETY RING / SICHERUNGSRING AUSSEN	POJISTNY KROUZEK 20	1

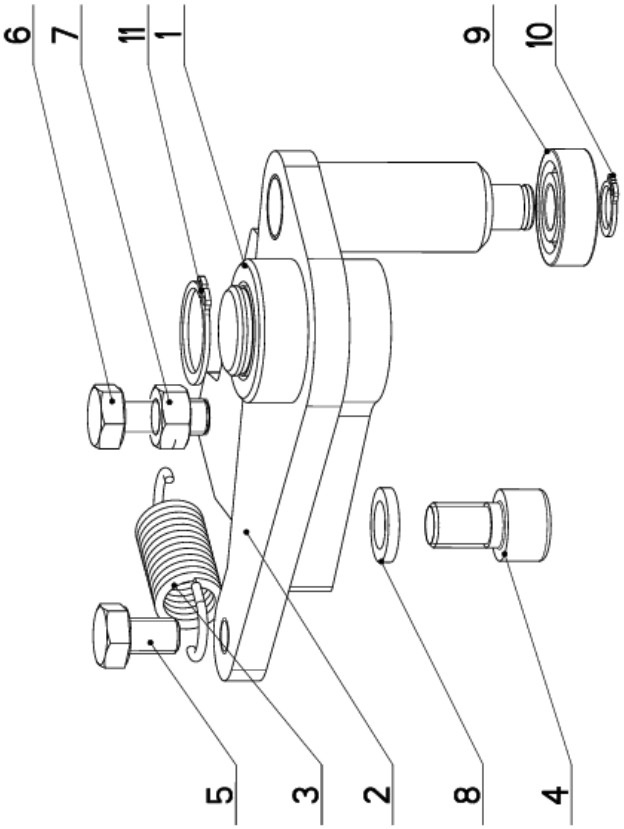

Cislo Sestavy/Number of assembly/Nummer der Baugruppe; Verze (Ver.)/Version/Version; Nazev sestavy/Assembly title/Name der Baugruppe; Pozice (Poz.)/Position/Position;
Objednaci cislo/Purchase order number/Bestellnummer; Nazev polozky/Volume title/Name der Position; Rozmer/Stock size/Abmessung

8. Volitelné příslušenství / Optionale Zubehör / Optional accessories

8.1. Odměřování / Measuring / Gehrungsmessung

Cislo Sestavy
201.ER2518-000

Ver.
0

Nazev sestavy
ODMEROVANI/MEASURING/GEHRUNGSMESSUNG

Poz.	Objednaci cislo	Ver.	Nazev polozky	Rozmer	Ks
1	30.1226-007	1	STERAC / WIPER / ABSTREIFER	BA 18	2
2	30.ER2518-002	0	LISTA / TRIM / LEISTE	HR 18x6	1
3	30.ER2518-005	0	DRZAK / HOLDER / HALTER	P2x108	1
4	30.ER2518-006	0	TYC / POLE / STANGE	HR 70x60	1
5	30.M220-005	0	DRZAK / HOLDER / HALTER	P 2x142	1
6	55.800.009	0	PLECH / PLATE / BLECH	P 0,3x15	1
7	90.013.27.003	0	SROUB / BOLT / SCHRAUBE	M5X10	2
8	91.270.018	0	SNIMAC MAGNET. / MAGNETIC SENSOR / MAGNETSENSOR	IZ16E-000-1-01,6-0	1
9	91.271.005	0	PASKA MAGNETICKA / MAGNETIC TAPE / MAGNETBAND	ELGO MB20-25	1

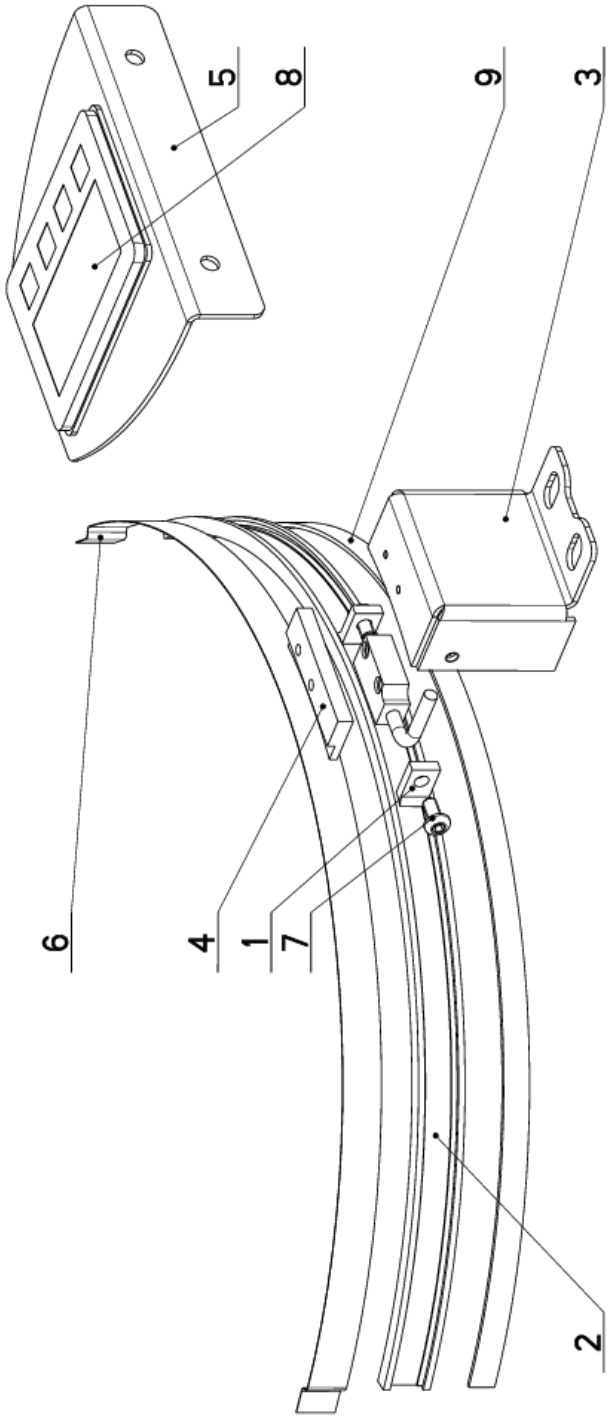

Cislo Sestavy/Number of assembly/Nummer der Baugruppe; Verze (Ver.)/Version/Version; Nazev sestavy/Assembly title/Name der Baugruppe; Pozice (Poz.)/Position/Position;
Objednaci cislo/Purchase order number/Bestellnummer; Nazev polozky/Volume title/Name der Position; Rozmer/Stock size/Abmessung

8.2. Odměřování / Measuring / Gehrungsmessung

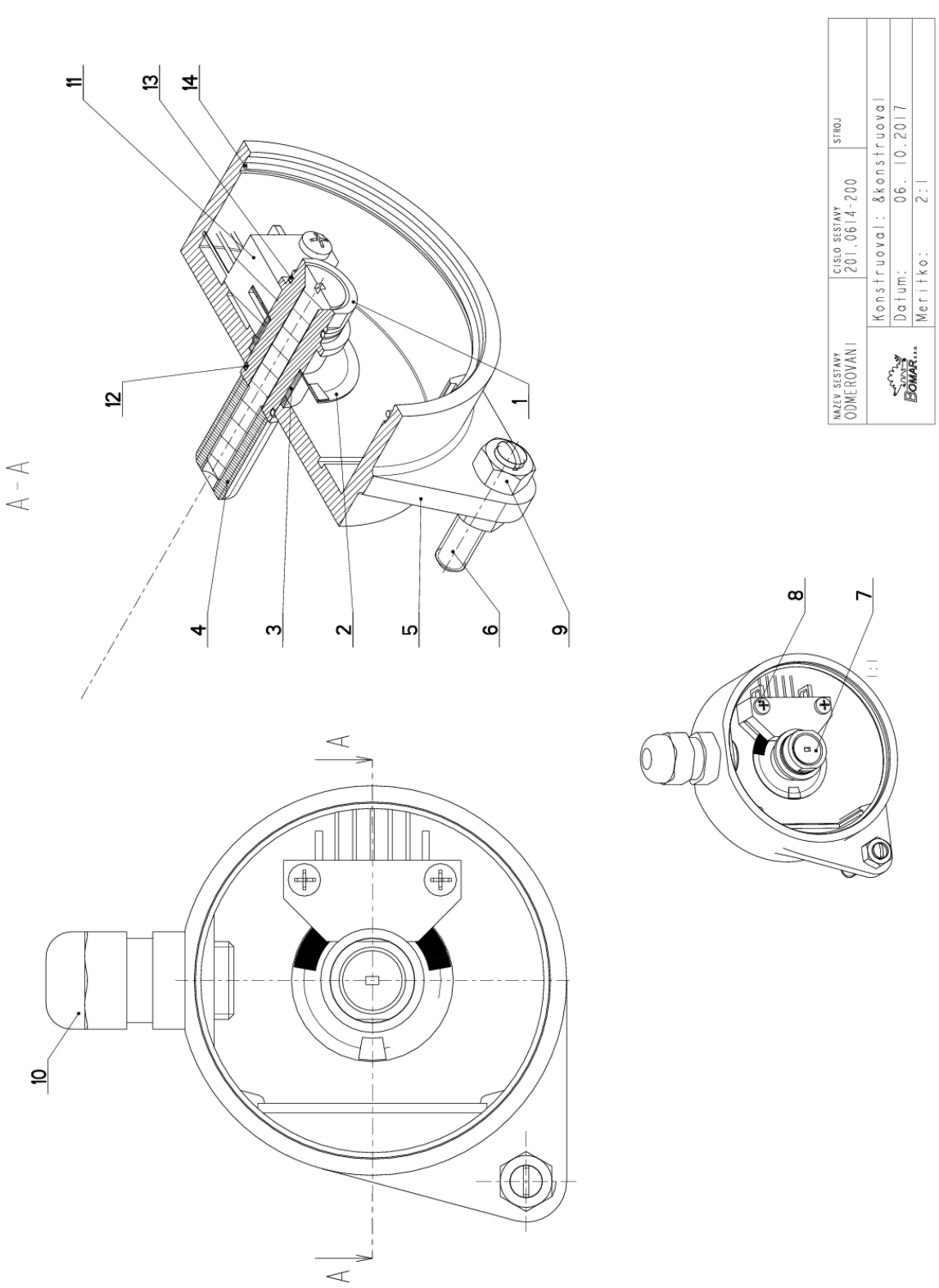

8.3. Kusovník / Piece list / Stückliste – Odměřování / Measuring / Gehrungsmessung

Cislo Sestavy	Ver.	Nazev sestavy
201.0614-200	0	ODMEROVANI/MEASURING/GEHRUNGSMESSUNG

Poz.	Objednaci cislo	Ver.	Nazev polozky	Rozmer	Ks
1	30.0614-201	0	CEP / LUG / BOLZEN	d 16	1
2	30.0614-203	0	CLONA / CURTAIN / SCHÜRZE	FOLIE 0.3	1
3	30.0614-204	0	POUZDRO / SLEEVE / BÜCHSE	TR 13x1	1
4	30.0614-208	0	SROUB / BOLT / SCHRAUBE	TYC M10	1
5	31.0614-202	0	KRABICE / BOX / DOSE	VYLISEK-PLAST	1
6	90.002.20.027	0	SROUB STAVECI / ADJUSTMENT BOLT / STELLSCHRAUBE	SROUB M5X25	1
7	90.011.27.019	0	ZAPUSTNY IMBUS / COUNTERSINK BOLT / SENKSCHRAUBE	SROUB M5X40	1
8	90.014.50.004	0	SROUB / BOLT / SCHRAUBE	M2.5x14	2
9	90.100.55.003	0	MATICE / NUT / MUTTER	MATICE _ M5	2
10	91.070.010	0	PRUCHODKA / LEADTHROUGH / DURCHFÜHRUNG	M12x1.5 CERNA	1
11	91.400.043	0	SNIMAC / SENSOR / SENSOR		1
12	96.001.020	0	KROUZEK O STATICKY / STATIC O RING / O-RING STATISCH	9x1	1
13	96.001.021	0	KROUZEK O STATICKY / STATIC O RING / O-RING STATISCH	11x1	1
14	96.002.027	0	KROUZEK TESNICI / SEAL RING / DICHTUNGSRING	50x1	1

Cislo Sestavy/Number of assembly/Nummer der Baugruppe; Verze (Ver.)/Version/Version; Nazev sestavy/Assembly title/Name der Baugruppe; Pozice (Poz.)/Position/Position; Objednaci cislo/Purchase order number/Bestellnummer; Nazev polozky/Volume title/Name der Position; Rozmer/Stock size/Abmessung

8.4. Ovládací panel / Control panel / Bedienpult

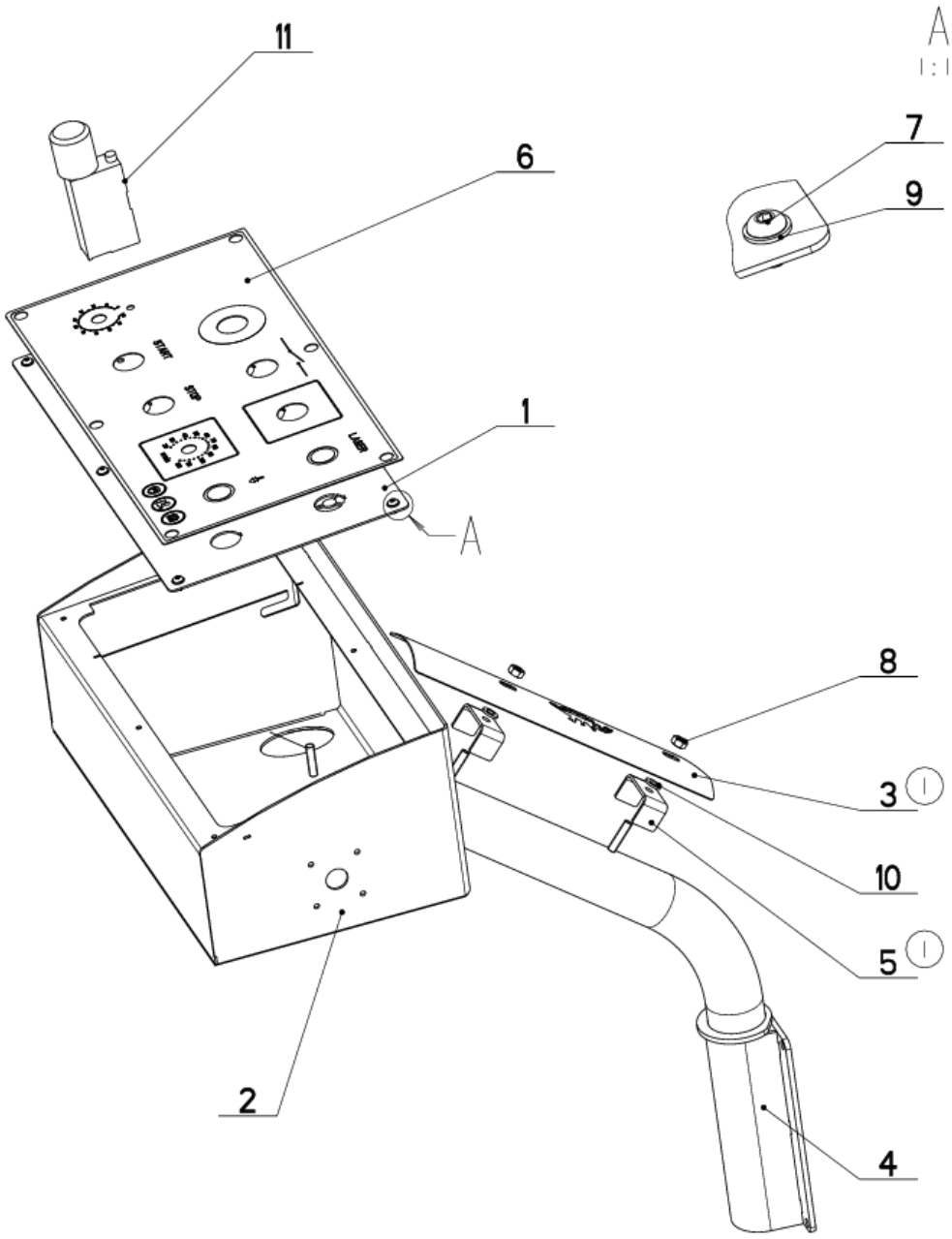

NAZEV SESTAVY	CISLO SESTAVY	STROJ
OVLADACI PANEL	201.0513-340	ERG.258/278SDG
BOMAR	Konstruoval: FABER	
	Datum: 10. 11.2016	
	Meritko: 1:4	

8.5. Kusovník / Piece list / Stückliste – Ovládací panel / Control panel / Bedienpult

Cislo Sestavy	Ver.	Nazev sestavy
201.0513-340	1	OVLADACI PANEL/CONTROL PANEL/BEDIENPULT

Poz.	Objednaci cislo	Ver.	Nazev polozky	Rozmer	Ks
1	30.0513-241	0	OVLADACI PANEL / CONTROL PANEL / BEDIENPULT		1
2	30.0513-320	0	NOHA / LEG / STANDER		1
3	30.0513-344 (1)	0	KRYT / COVER / ABDECKUNG	P 1x64	1
4	30.2814-607	2	DRZAK / HOLDER / HALTER		1
5	30.ER2530-308 (1)	0	DRZAK / HOLDER / HALTER	P 2x20	2
6	31.0513-404	0	SAMOLEPKA / STICKER / AUFKLEBER		1
7	90.013.27.001	0	SROUB / BOLT / SCHRAUBE	M4x8	6
8	90.100.55.004	0	MATICE / NUT / MUTTER	MATICE _ M6	2
9	90.150.50.002	0	PODLOZKA / WASHER / UNTERLEGSCHEIBE	PODLOZKA 4,3	6
10	90.150.50.004	0	PODLOZKA / WASHER / UNTERLEGSCHEIBE	PODLOZKA 6,4	2
11	92.152.001	0	VENTIL SKRTICI / CHOKE VALVE / DROSSELVENTIL	VS01-04/R 2.5-0	1

1.ZRUS.DRZAK 30.9307-109 A NAHR.30.ER2530-308,PRID.KRYT 30.0513-344. 155/ZM365 10.11.2016 SLEZACKOVA

Cislo Sestavy/Number of assembly/Nummer der Baugruppe; Verze (Ver.)/Version/Version; Nazev sestavy/Assembly title/Name der Baugruppe; Pozice (Poz.)/Position/Position; Objednaci cislo/Purchase order number/Bestellnummer; Nazev polozky/Volume title/Name der Position; Rozmer/Stock size/Abmessung