Serie **Extend**

Extend 1000.820

Operating instructions

Before transporting and using the machine, please read the instructions thoroughly!

Seriové číslo / Serien Nummer / Serial Number _____

Service and information

Your BOMAR dealer:

Direct BOMAR contact:

BOMAR spol. s r.o.
Těžební 1236/1
62700 Brno
Czech Republic, EU

telefon: +420 – 533 426 100
fax: +420 – 533 426 109
e-mail: info@bomar.cz
www: http://www.bomar.cz

We are available:

Mondays to Fridays 7^{00} – 16^{00}

Version:

1.14 / June 2021

rev. 1

BOMAR, spol. s r.o. © – Subject to modifications and amendments.

EC Declaration of Conformity

1) We:

BOMAR, spol. s r.o.
Těžební 1236/1
627 00 Brno, Czech Republic
Id. No: 48908827

declare herewith

that the following designated device based on its conception and construction as well as the design launched by us meets the relevant basic safety requirements of the decrees of the government.This statement applies exclusively to the machine device in conditions in which it was brought to the market. It does not apply to parts subsequently added by the end user or to modifications performed subsequently by the end user. In the event of any device modification not approved by us this declaration shall lose its validity

Name:	**Band Saw**
Type :	**Extend 1000.820**
Serial number:	011 -100 000
Manufacturer	**BOMAR, spol. s r.o., Těžební 1236/1, 627 00 Brno**
Product data	
Determination:	for cross dividing and cutting of rolled and towed bars and profiles made of steel, stainless steel, non-ferrous metals and plastics
Description:	Stand, table, cutting unit with the arm, saw band and drive, hand clamping device, cooling system, machine control
	Pneumatic *NO* ☒ *YES* ☐ Hydraulic *NO* ☐ *YES* ☒ Control system *NO* ☐ *YES* ☒
Technical data:	Cutting rate 15-90 m.min^{-1}
	Cutting angle 0°
	Total dimensions in mm (lxwxh) 4360x1400x2970
	Total power requirement 13 kVA
	Weight 7500 kg

Documentation:
Technical documentation for this machine device was elaborated in compliance with Government regulation no. 176/2008, Annex 7, part A.

The device meets relevant requirements of the given directives: **2006/42/ES**
2014/30/EU

The applied harmonized standards, National standards and technical specifications:

ČSN EN ISO 12100:2011	ČSN EN ISO 16093:2018	ČSN EN ISO 13857:2021
ČSN EN ISO 4413:2011		ČSN EN 60204 -1 ed.3:2019
ČSN EN 55011 ed.4+A1:2017	ČSN EN 61000-6-2 ed.3:2006	ČSN EN 61000-6-4 ed.2+A1:2011

The product is safe on condition of the common and determined usage.

The conformity judging was performed according to §12, art..3a), of the Law no. 22/1997 Coll. as amended.

BOMAR, spol. s r.o.
Těžební 1236/1, 627 00 Brno
Czech Republic
IČO: 48908827
DIČ: CZ48908827

Brno, 08.06.2021

Point of issue, datum

Alfred Pichlmann, Managing Director

Name and function of the responsible subject, signature

Person authorized to complete the technical documentation:: BOMAR, spol. s r. o., Těžební 1236/1, 627 00 Brno

1) Name, address and identification number of the subject issuing the conformity declaration (producer of importer)
2) The authorized or accredited body co-operating on the conformity judging

!

If the equipment is installed without safety equipment offered by BOMAR, spol. s ro or its agents and used by the customer (or buyer) then EC declaration loses validity.
EC Declaration of conformity is valid only if customer (buyer) installed the BOMAR safety equipment with the machine or with some other with equivalent safety device in accordance with current applicable regulations and standards.
All machine elements and components that were built into the device by BOMAR, spol. s ro have been declared "identical" to a safety device, as offered by BOMAR, spol. s ro or its agents.

Content

1. SAFETY NOTES....9

1.1. Machine determination....11
1.2. Protective suit and personal safety....11
1.3. Safety notes for machine operator....12
1.4. Safety notes for the servicing and repairs....13
1.5. Safety notes for the servicing and repairs on hydraulic unit....13
1.6. Safety machine accessories....13
1.6.1. Emergency Stop Switch....13
1.6.2. Saw band stretching and rupture inspection....14
1.6.3. Band saw cover....14
1.6.4. Arm covers....14
1.7. Safety notes for the cooling....15
1.7.1. Instructions for first help....15
1.8. Umístění štítku stroje / Maschinenschild position / Position of machine label....16
1.9. Umístění bezpečnostních značek / Verteilung der Sicherheitszeichen / Position of safety symbols....17

2. MACHINE DOCUMENTATION....19

2.1. Technická data / Technische Daten / Technical data....21
2.2. Rozměrové schéma / Aufstellzeichnung / Installation diagram....22
2.3. Popis / Beschreibung / Description....23
2.4. Transportation and stocking....24
2.4.1. Conditions for transportation and stocking....24
2.4.2. Transport and stocking preparations....24
2.4.3. Transport and stocking....24
2.4.4. Transportní schéma / Transport schema / Transport scheme....25
2.5. Activation....26
2.5.1. Machine working conditions....26
2.6. Band saw unpacking and assembling....26
2.6.1. Machine installing and levelling....26
2.6.2. Machine disposal after lifetime....26
2.6.3. First run of the power pack....26
2.6.4. Filling the reservoir with hydraulic oil....27
2.6.5. Kotevní plan / Verankerungsplan / Grounding plan....28
2.7. Electrical connection....29
2.7.1. Check the direction of the saw band....29
2.8. Check machine connection into electrical network....30
2.9. Filling of the cooling system....30
2.10. Check machine function....30
2.11. Saw band....30
2.11.1. Saw band size....30
2.11.2. Selection of the saw band tooth system....30
2.11.3. Saw band running-in....31
2.11.4. Table for teeth selection....32

3. MACHINE CONTROL....33

3.1. Starting the band saw....35
3.2. Control panel....36
3.2.1. Control panel description....37
3.3. Machine setup....39
3.3.1. SERVIS....39
3.3.2. SETUP....41
3.4. Machine error messages....43
3.5. Machine control....44
3.5.1. Semi-automatic cycle - – standard type....44
3.5.2. Semi-automatic cycle - with possibility of saw frame lift stop setting using an encoder (optional accessory)....45
3.6. Cycle breaking....47
3.7. Band saw adjusting....48
3.7.1. Cutting speed adjusting....48
3.7.2. Adjustment of pressure to the cut....48
3.7.3. Speed adjustment of the arm lowering....48
3.7.4. Saw frame lift stop setting – standard type....49
3.7.5. Saw frame lift stop setting - using encoder (optional accessory)....49
3.7.6. Brush adjustment....50
3.8. Material insertion....51

3.8.1. Handling agent selection ... 51
3.8.2. Insertion ... 51
3.8.3. Bundle material cutting ... 51

4. MACHINE SERVICE ... 53

4.1. Saw band dismantling ... 55
4.2. Saw band installation ... 55
4.3. Saw band stretching and inspection ... 56
4.3.1. Saw band stretching ... 56
4.4. Saw band run adjustment on stretching wheel ... 56
4.4.1. Saw band run inspection ... 56
4.4.2. Saw band run setting ... 57
4.5. Limit switch setting of the saw band stretching ng ... 57
4.6. Saw arm lower position stop adjustment ... 57
4.7. Adjusting of the limit switch of the saw band stretching ... 58
4.7.1. Setting inspection ... 58
4.7.2. Limit switch setting ... 58
4.8. Adjustment of the cutting pressure regulation ... 58
4.8.1. Setting on the right guiding cube ... 59
4.8.2. Setting on the left guiding cube ... 59
4.9. Cooling agents and chips disposal ... 60
4.9.1. Cooling liquid preparation ... 60
4.10. Coolant device inspection ... 61
4.10.1. Chips disposal ... 61
4.11. Hydraulic, Greases and oils ... 62
4.11.1. Gearbox oils ... 62
4.11.2. Lubricant greases ... 63
4.11.3. Lubrication ... 63
4.11.4. Hydraulic oils ... 63
4.11.5. Hydraulic unit service ... 64
4.11.6. Hydraulic oil level check ... 65
4.12. Machine cleaning ... 65
4.13. Worn pieces replacement ... 66
4.13.1. Pushing bearing replacement ... 66
4.13.2. Saw band guiding pulleys replacement ... 68
4.13.3. Hard metal guides replacement ... 70
4.13.4. Brush replacement ... 71

5. ZÁVADY / TROUBLESHOOTING ... 73

5.1. Mechanical problems ... 75
5.2. Electric problems ... 77
5.3. Hydraulic problems ... 78

6. SCHÉMATA / SCHEMAS / SCHEMATICS ... 79

6.1. Elektrické schema /Elektroschema /Electric scheme ... 81
6.2. Elektrické schema /Elektroschema /Electric scheme ... 107
6.3. Hydraulické schéma / Hydraulikschema / Hydraulic diagram – 1 svěrák / 1 Schr. / 1 Vice ... 131
6.4. Hydraulické schéma / Hydraulikschema / Hydraulic diagram – 2 svěráky / 2 Schr. / 2 Vices ... 133

7. VÝKRESY SESTAV PRO OBJEDNÁNÍ NÁHRADNÍCH DÍLŮ / ZEICHNUNGEN FÜR BESTELLUNG DER ERSATZTEILE / DRAWING ASSEMBLIES FOR SPARE PARTS ORDER ... 135

7.1. Extend 1000.820 ... 136
7.2. Kusovník / Piece list / Stückliste - Extend 1000.820 ... 137
7.3. Extend 1000.820 ... 138
7.4. Kusovník / Piece list / Stückliste - Extend 1000.820 ... 139
7.5. Chlazení / Cooling / Kühlung ... 140
7.6. Odměřování / Measuring / Gehrungsmessung ... 141
7.7. Podstavec / Base / Untersatz ... 142
7.8. Kusovník / Piece list / Stückliste - Podstavec / Base / Untersatz ... 143
7.9. Svěrák / Vice / Schraubstock ... 144
7.10. Kusovník / Piece list / Stückliste - Svěrák / Vice / Schraubstock ... 145
7.11. Válec svěráku / Vice cylinder / Schraubstockzylinder ... 146
7.12. Kusovník / Piece list / Stückliste - Válec svěráku / Vice cylinder / Schraubstockzylinder ... 147
7.13. Rameno / Shoulder / Sägerahmen ... 148

7.14. Kusovník / Piece list / Stückliste - Rameno / Shoulder / Sägerahmen 149
7.15. Rameno / Shoulder / Sägerahmen 150
7.16. Kusovník / Piece list / Stückliste - Rameno / Shoulder / Sägerahmen 151
7.17. Kartáč / Brush / Bürste 152
7.18. Kusovník / Piece list / Stückliste - Kartáč / Brush / Bürste 153
7.19. Kolečko / Wheel / Rolle 154
7.20. Pohon / Drive / Antrieb 156
7.21. Kusovník / Piece list / Stückliste - Pohon / Drive / Antrieb 157
7.22. Napínání / Tensioning / Spannung 158
7.23. Kusovník / Piece list / Stückliste - Napínání / Tensioning / Spannung 159
7.24. Vedení pásu / Belt guide / Sägebandführung 160
7.25. Kusovník / Piece list / Stückliste - Vedení pásu / Belt guide / Sägebandführung 161
7.26. Vedení pásu / Belt guide / Sägebandführung 162
7.27. Kusovník / Piece list / Stückliste - Vedení pásu / Belt guide / Sägebandführung 163
7.28. Doraz / Stop piece / Anschlag 164
7.29. Kusovník / Piece list / Stückliste - Doraz / Stop piece / Anschlag 165
7.30. Kostka vodící / Lead cube / Führungsklotz 166
7.31. Kusovník / Piece list / Stückliste - Kostka vodící / Lead cube / Führungsklotz167
7.32. Kostka vodící / Lead cube / Führumgsklotz 168
7.33. Kusovník / Piece list / Stückliste - Kostka vodící / Lead cube / Führumgsklotz169
7.34. Vedení / Guide / Backenführung 170
7.35. Kostka regulace / Regulation cube / Regelungswürfel 171
7.36. Válec napínací / Tensioning cylinder / Spannzylinder 172
7.37. Kusovník / Piece list / Stückliste - Válec napínací / Tensioning cylinder / Spannzylinder 173
7.38. Válec zvedací / Lifting cylinder / Hebezylinder 174
7.39. Kusovník / Piece list / Stückliste - Válec zvedací / Lifting cylinder / Hebezylinder 175
7.40. Vynašeč třískový / Chip extractor / Spanabführung 176
7.41. Kolo napínací / Tensioning wheel / Umlenkrad 177
7.42. Pohon / Drive / Antrieb 178
7.43. Kusovník / Piece list / Stückliste - Pohon / Drive / Antrieb 179
7.44. Řetěz / Chain / Kette 180
7.45. Rošt / Grill / Gitter 181
7.46. Ovladací panel / Control panel / Bedienpult 182
7.47. Kusovník / Piece list / Stückliste - Ovladací panel / Control panel / Bedienpult183
7.48. Ovladací panel / Control panel / Bedienpult 184
7.49. Kusovník / Piece list / Stückliste - Ovladací panel / Control panel / Bedienpult185
7.50. Příslušenství / 187
7.50.1. Pohon / Drive / Antrieb 188
7.50.2. Kusovník / Piece list / Stückliste - Pohon / Drive / Antrieb 189
7.50.3. Vynašeč třískový / Chip extractor / Spanabführung 190
7.50.4. Laserové-ukazovátko / Laser / Laser 191
7.50.5. Vedení pásu / Belt guide / Sagebandfuhrung 192
7.50.6. Upínání horní / Top clam / Spannvorrichtung oben 194
7.50.7. Kusovník / Piece list / Stückliste - Upínání horní / Top clam / Spannvorrichtung oben 195

1. Safety notes

The operating instructions must be read by the person, who keeps in touch with the machine before transportation, installation, using, servicing, reparation, stocking or removal!

The operating instructions include relevant information. The operator must familiarise himself with the install and operation, safety notes and machine servicing, because reliability and service life must be reached. The operating instructions must avoid risks, which are linked to work on the machine. Before transporting and using of the machine, please read the instructions thoroughly!

Attention!
The operating instructions must be available at the machine!
Keep the operating instructions in good condition!

1.1. Machine determination

The band saw **Extend 1000.820** is determined for cutting and shortening of rolled bars and drawn bars and profiles from steels, stainless steels, non-ferrous metals and plastics **with zero cutting angle**.

Combustible materials are excepted for cutting! Any other usage and operation outside this range are unauthorized and the manufacturer/supplier does not accept any responsibility for any damages resulting from such misuse. **The operator has full responsibility!**

The machine is equipped with safety and protective guarding for operator and machine protection. Nevertheless, this safety and protective guarding cannot prevent injury. Service personnel must read this chapter and comprehend it, before he starts to work on the machine. **Always keep instructions about work safety!** Service personnel must take into account other aspects of the risk, which refer to the ambient conditions and the material.

Attention!
Consider the safety signs on the machine. Do not remove or damage them!

1.2. Protective suit and personal safety

Wear tight fitting overalls! Loose fitting clothes may be caught with machine parts and cause serious injury.

Wear protective gloves! Material cuts and saw band have sharp edges and may cause serious injuries.

Attention!
Gloves you can use only at working material replacement (saw band)! The machine and accessories must be inactive!
If the machine is running, you must not wear gloves! It is dangerous, because some parts of the machine can catch gloves!

Wear protective shoes with non-skid soles! The unsuitable shoes may cause balance loss and following injury. Falling work pieces may cause serious injuries too.

Wear protective goggles! Chips and cooling liquid may damage your eyes.

Always wear ear protections! Most of the machines emit up to 80 dB and may damage your hearing.

Do not wear jewellery and always tie back long hair! Moving machine parts can catch jewellery or loose hair and may cause serious injuries.

Operate the machine only when you are fit enough to work. Illnesses or injuries diminish concentration. Avoid machine work, which may compromise the safety of you and your colleagues!

1.3. Safety notes for machine operator

Attention!
Machine can be operated by person older than 18 years!
Machine can be operated only person physically and mentally fit for this activity

Keep instructions and orders about work safety!
Read the operating instructions, before you start to work on the machine! Keep the operating instructions in good condition!

Machine can be operated only by one person. Machine operator is responsible for presence of other persons by the machine.

Close covers before the machine starting and check, if the covers are not damaged. Damaged covers must be repaired or changed. Do not start the machine, if the cover is removed! Check, if the electric cables are not damaged.

- Do not hold the material for clamping to the vice and for cutting!
- Do not operate with the buttons and the switches on the control panel, when you have gloves!

Attention!
Do not connect the machine to electricity if the covers are removed. Do not touch the electrical equipment.

- For machine starting take care, that there is nobody in the working area of the machine (it means in the working area of the vice, the saw band, the saw arm etc.).
- In no circumstances touch the rotating elements.
- Work on the machine only when the machine is in good condition!
- Check at least once in a shift, if the machine is not damaged. If the machine is damaged, you must bring the machine in order and you must inform your superior!
- Keep your working area clean! Ensure sufficient lighting in the working area.
- Take off the spilt water or the oil from the floor and dry it. Do not touch the cooling liquid with bare hands! Do not set the nozzle of the cooling liquid, when the machine is started on
- Do not remove the chips from the working area of the machine, when the machine is started on!
- Do not use the compressed air for the machine cleaning or for the chips removing!
- Use the protective instruments for chips removal!

1.4. Safety notes for the servicing and repairs

Attention!
Only a qualified professional can carry out the servicing and repairs of the electric equipment! Take special care during the work with electrical equipment. High voltage shock can have fatal consequences! Always keep notes about work safety! Otherwise, there is possibility of heavy injury!

Switch off the main switch and lock it, before you start service work! Otherwise, there is possibility of hazardous machine starting.

Only qualified person can do the servicing and repairs. For parts changing, use only parts, which are identical with the originals. Otherwise, there is possibility of health hazard. Use only recommended type of the hydraulic oils and oils and lubricants!

Do not remove or do not lock the limit switches or safety equipments! Any use of the saw, accessories or machine parts other than that intended by the BOMAR, spol. s r.o. company is not permitted. The guarantee on this product will be afterward lost and BOMAR, spol. s r.o. takes no responsibility for caused damages.

1.5. Safety notes for the servicing and repairs on hydraulic unit

Compliance with the the principles of cleanliness is basic requirement for trouble-free operation of hydraulic equipment. Hydraulic components are products made with high accuracy, and any contamination leads to a reduction lifetime or even malfunction. The consequences are very difficult to remove and expensive.

Always use clean tools. Parts and fasteners, which are part of a hydraulic circuit, never put away the dirty surface. The best cleaning agent is crepe paper, because the fibers of the cleaning cloths can also cause malfunction.

Protective cap from the threaded chamber remove just before the assembly of the unit.

Hoses and pipes before mounting flush with gasoline or other cleaning agent and blow compressed air.

All fittings must be properly tightened. However, do not raw power.

1.6. Safety machine accessories

The machine is equipped with safety accessories. It protects the operator from injuries and the machine before damage. The safety accessories are blocking accessories, emergency switches and covers. Check once in a week the function of the safety accessories. If the safety accessories are functionless, you must stop work and repair or change the safety accessories.

Enhanced risk!
Do not come into or intervene in the cutting area. Otherwise, there is possibility of heavy injury.

1.6.1. Emergency Stop Switch

Emergency Stop Switch is used for emergency switching – off the machine in case defect or health hazard. By pressing **Emergency Stop Switch** will immediately stop all dangerous machine movements.

If any damages or fault appears, immediately press Emergency Stop Switch!

It is possible to release the pressed button by twisting of the upper part of the button.

The **Emergency Stop Switch** is placed at the control panel of the machine.

1.6.2. Saw band stretching and rupture inspection

This device checks the saw band stretching and causes immediate machine shut – down in the event the band ruptures.

The device contains limit switch. Check the stretching carefully and periodically – eventually adjust.

1.6.3. Band saw cover

It covers the visible area of the saw band from left guiding cube to the frame.

Never switch on the saw band driver if this cover is not mounted!

1.6.4. Arm covers

Left cover – It covers tightening wheel. If the cover is opened during operation, the limit switch is opened and the band saw is stopped. The band saw is not possible start in set mode.

Right cover – It covers driving wheel. If the cover is opened during operation, the limit switch is opened and the band saw is stopped. The band saw is not possible start in set mode.

The band saw is stated to the operation, when the covers is closed!

1.7. Safety notes for the cooling

Attention!

- *When handling cooling agents always wear hazardous fluid-proof gloves!*
- *Wear protective goggles!*
- *Cooling liquid can get in contact with your eyes and may cause permanent severe injuries*

1.7.1. Instructions for first help

1. Pull off and safely remove polluted, soaked clothing.
2. For breathing, go out in the fresh air or look for first aid treatment.
3. Wash with water or use crèmes for contact with the skin.
4. Flush with water for eyes and look for first aid treatment.
5. For swallowing, drink a lot of water and induce vomiting. Look for medical help.

1.8. Umístění štítku stroje / Maschinenschild position / Position of machine label

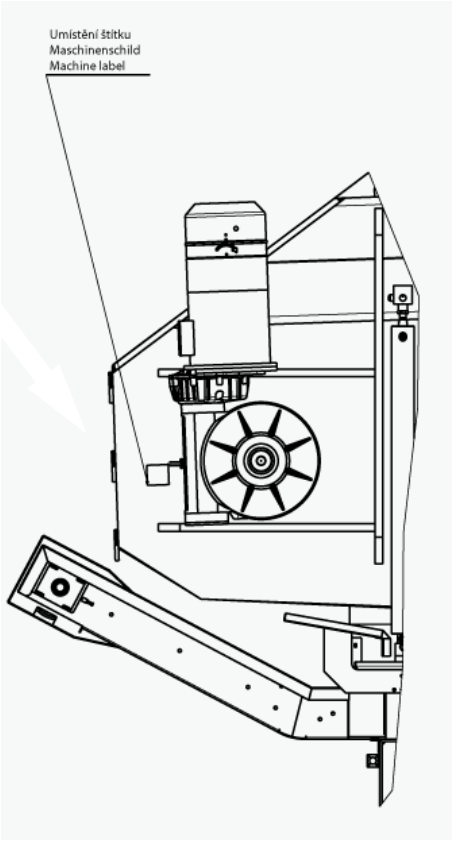

1.9. Umístění bezpečnostních značek / Verteilung der Sicherheitszeichen / Position of safety symbols

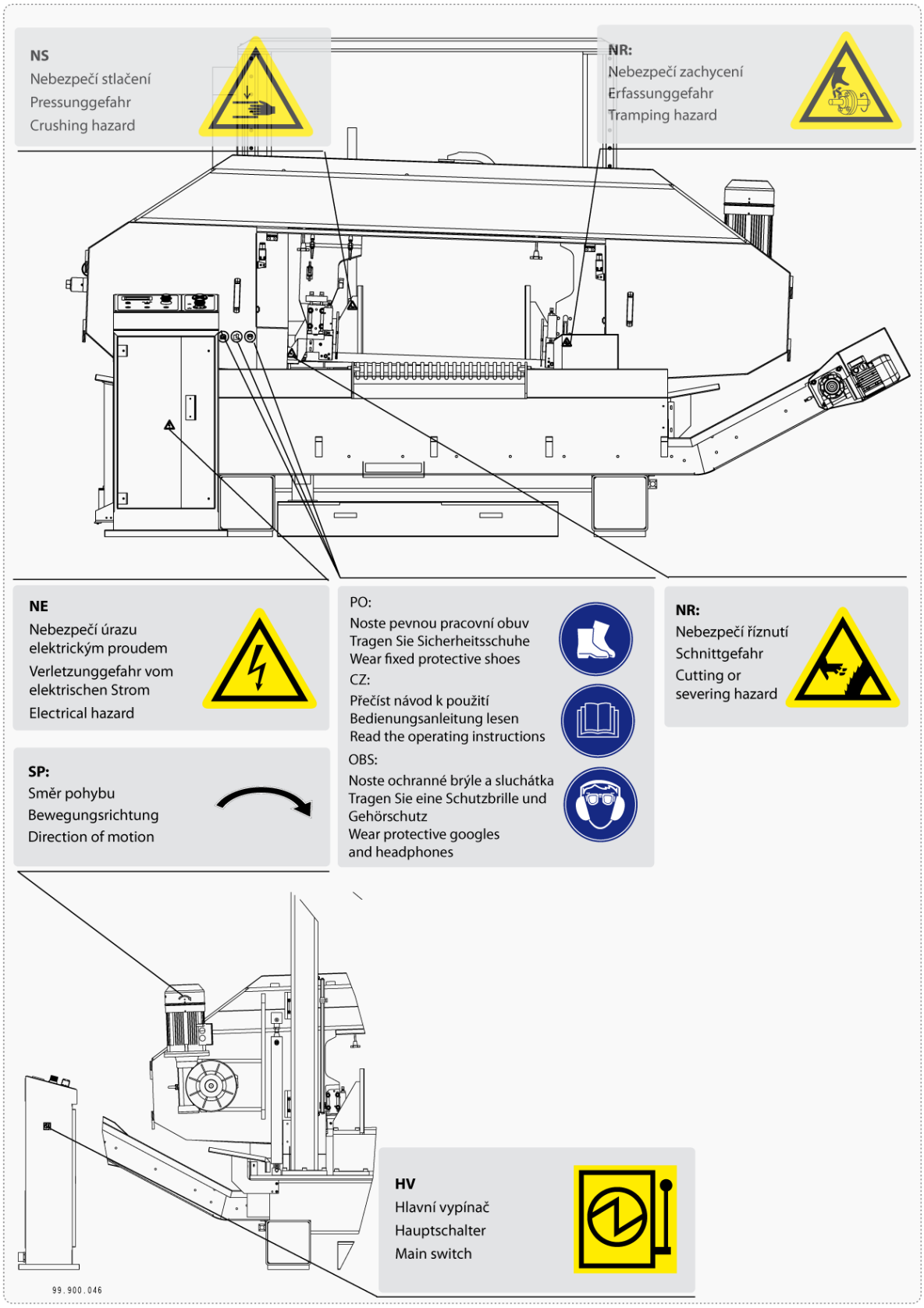

2. Machine documentation

2.1. Technická data / Technische Daten / Technical data

Hmotnost stroje / Maschinengewicht / Machine weight:	
• Hmotnost / Gewicht / Weight	7500 kg
Rozměry stroje / Maschinengröße / Machine size :	
• Délka / Länge / Lenght	4360 mm
• Šířka / Breite / Width	1400 mm
• Výška / Höhe / Height	2970 mm
Elektrické vybavení / Elektrische Ausrüstung / Electical equipment:	
• Napájení / Versorgungsspannun / Supply voltage	~3 x 400V, 50Hz, TN-C-S
• Příkon / Gesamptschlusswert / Total Input	13 kW
• Max.jištění / Max. Vorschaltsicherung / Max. Fuse	32 A
• Krytí / Schutzart / Protection	IP 54
Akustický tlak / Schalldruckpegel / Acoustic pressure:	
• Extend 1000.820	L_{Aeqv}=86 dB
Pohon / Atrieb / Drive:	
• Typ / Typ / Type	1LA7133-4AA61
• Výkon / Leistung / Output	7,5 kW
• Jmenovité otáčky / Motornenndrehzahl / Nominal speed	1455 min^{-1}
Hydraulické zařízení / Kühlmiteleinrichtung / Hydraulic equipment:	
• Typ / Typ / Type	92.001.048./(731-0507)
• Výkon / Leistung / Output	6,5 MPa/2,2 kW
• Jmenovité otáčky / Motornenndrehzahl / Nominal speed	1425 min^{-}
Chladící zařízení / Kühlmiteleinrichtung / Cooling equipment:	
• Typ / Typ / Type	3-COA4-14 HP1
• Výkon / Leistung / Output	0,05 kW
• Obsah nádrže / Volumen vom Kühlmittel / Capacity	50 l
Rozměr pásu / Sägebanddimension / Band size:	
9280×54 (67)×1,6 mm	
Řezná rychlost / Schnittgeschwindigkeit / Cutting speed:	
15–90 m/min. (special 10-70 m.min^{-1}, 20-120 m.min^{-1})	
Řezné rozsahy / Schnittbereiche / Cutting size:	

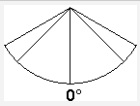			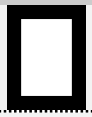	
0°	Ø820 mm	820×1000 mm	820×1000 mm	820×820 mm

Level of acoustic pressure:

Equivalent level of acoustic pressure A (noise) at operator position are L_{Aeqv}=86 dB. Mentioned values are levels of emission which doesn't have to represent safe levels. Factors which influence real level of acoustic pressure on machine operator are: working place characteristics, cut material, saw band. These factors have significantly influence on acoustic pressure.

2.2. Rozměrové schéma / Aufstellzeichnung / Installation diagram

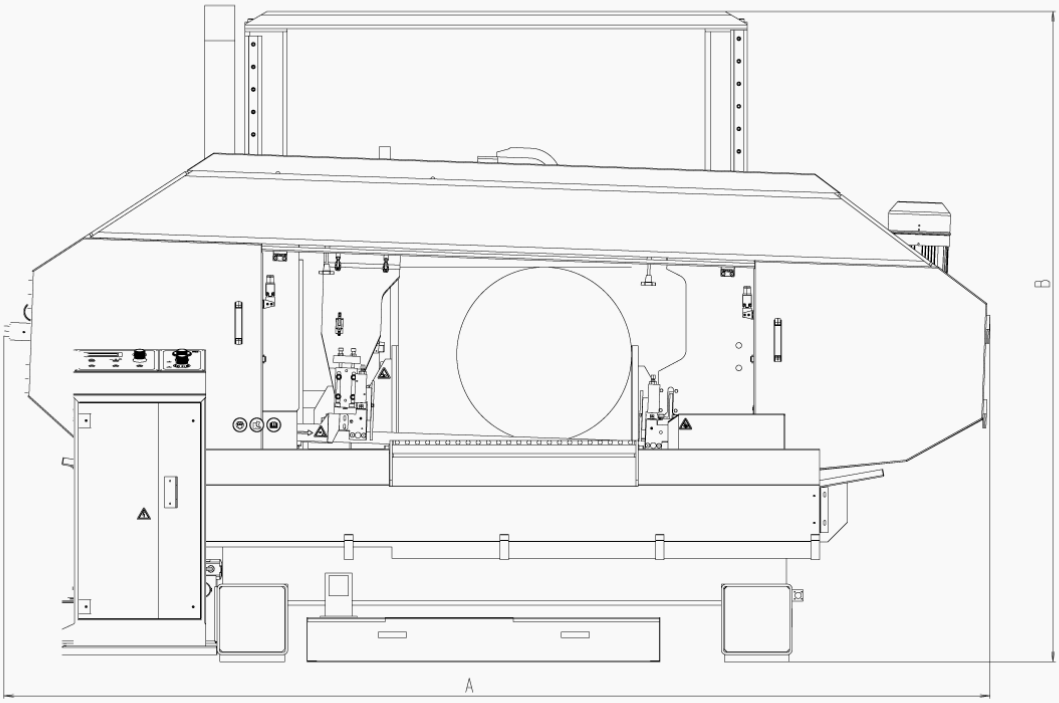

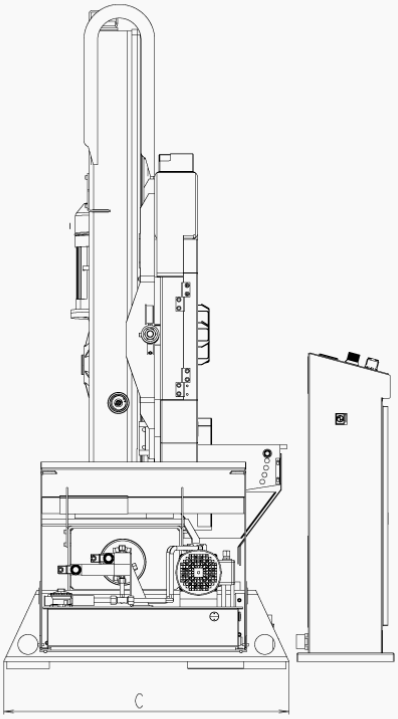

	A	B	C
Extend 700.520	3250	2230	1000
Extend 800.620	3500	2330	1000
Extend 900.720	4000	2600	1250
Extend1000.820	4350	3000	1400
Extend1120.1120	5120	3280	1700

2.3. Popis / Beschreibung / Description

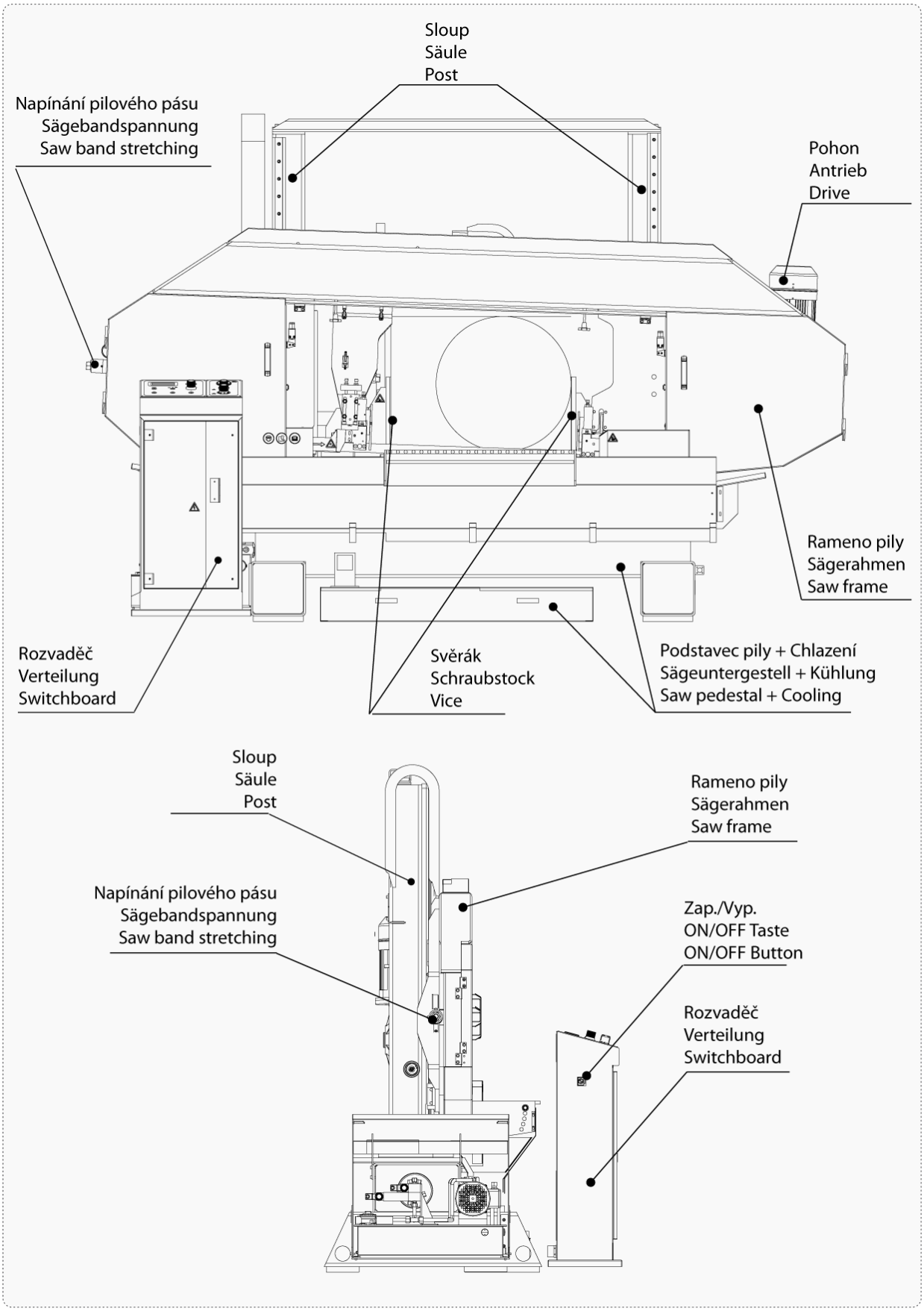

2.4. Transportation and stocking

2.4.1. Conditions for transportation and stocking

Keep recommendations for the manufacturers for transportation and stocking! If the recommendations are not kept, damage can occur to the machine.

- Don't use a forklift truck for handling the machine, if you do not have license for it!
- Don't move under suspended loads! Fault in lifting device may cause serious injury.
- Keep a safe distance from the machine during the transport.
- Temperature of the air from *-25℃ to 55℃*, for a *short term* (max. 24 hours) temperature of the air until *70℃*
- Do not expose the machine to radiation (for example microwave radiation, ultraviolet radiation, laser radiation, x-ray radiation). Radiation can cause problems with the machine function and deteriorating condition of the isolation.
- Take measures, to prevent damage by dampness, by vibrations and by shakes.

2.4.2. Transport and stocking preparations

Close the vice and thoroughly oil all blank surfaces.

Lower the saw frame to the lowest position.

Make sure to empty the machine of all traces of the cooling agent.

Fasten all loose parts securely to the machine.

Pack and wrap the control desk securely to avoid damage during transport.

Fix the stickers stating the minimum approximate machine weight to at least five well visible places.

2.4.3. Transport and stocking

Handle the machine only with suspension cables and the crane. The pedestal is equipped with slots ∅=70 mm. Insert the appropriate steel bars to all of these slots (see arrows on the picture). It is possible use two long or four short bars. Fix the suspension cables to the steel bars

Make sure that the suspension cables and the crane had sufficient capacity

Make sure that the van or the trailer had sufficient capacity

The machine must be secured during transportation

Screw on the palette to the floor of the van or the trailer.

Be careful that the machine is not damaged during transportation

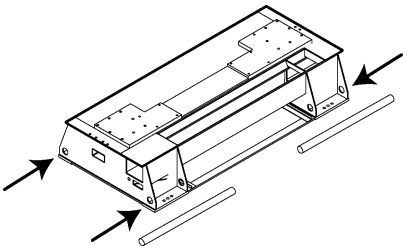

It is forbidden to handle the machine any other way (for example by, lifting by the saw frame of the band saw), than it is written in this operating instructions, the machine can be damaged!

2.4.4. Transportní schéma / Transport schema / Transport scheme

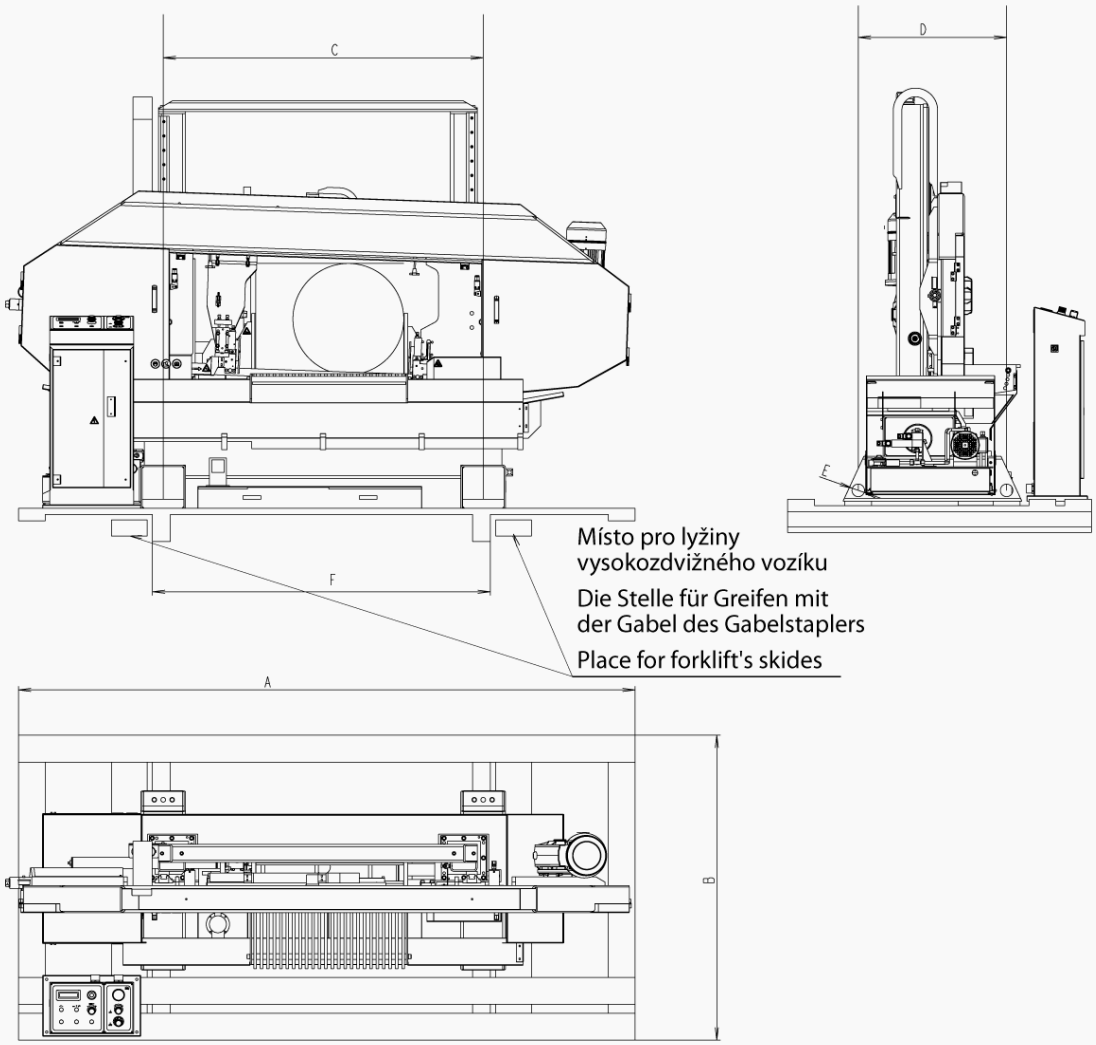

	A	B	C	D	E	F
Extend 700.520	3300	1540	1655	900	ø70	1865
Extend 800.620	3450	1700	1790	900	ø70	1990
Extend 900.720	4000	1800	1950	1150	ø70	2150
Extend1000.820	4300	2200	2275	1300	ø70	2475
Extend1120.1120	3000	2400	2565	1600	ø70	

2.5. Activation

2.5.1. Machine working conditions

Keep the conditions of the manufacturer for machine operating! If recommendations are not kept, damage can occur to the machine.

The manufacturer warrants the correct function of the machine for these conditions:

- At temperature air ***from 10°C to 40°C***, the temperature average during 24 hours must ***not exceed over 35°C***.
- At relative dampness of the air in the extend from 30% to 95% (not concentrate)
- Altitude lower than 1000 metres.
- Do not expose the machine to the radiation (for example microwave radiation, ultra-violet radiation, laser radiation, x-ray radiation). Radiation can cause problems with the machine function and deteriorating condition of the isolation.

2.6. Band saw unpacking and assembling

Remove the packing from the machine and unpack all parts.

Attention!
Switch off the main switch and lock it, before you start assembly! Otherwise, there is possibility of hazardous machine starting.

2.6.1. Machine installing and levelling

Check the floor supporting capacity before machine installing. If the floor capacity does not agree with requirements, you must prepare the necessary base for the machine.

Minimal requirement:

machine weight – Extend 1000.820 – 7500 kg

+ weight of accessories

+ maximum weight of material

- The machine must be levelled at the horizontal position. All feet of the machine must touch with the floor after levelling
- The machine must be levelled by means of the calibrated spirit level. Spirit level is put on the vice area. Set the roller conveyors according to the spirit level.
- For machine levelling, take care that there is sufficient available space for operation, repair work, servicing of the machine and handling the material..
- The machine including appended parts and accessories must be visible from the place of operation.

2.6.2. Machine disposal after lifetime

Blown out all service fluids (cooling liquid, hydraulic oil) into designated reservoir. Dismantle machine into separate parts and dispose them in accordance with valid directives.

2.6.3. First run of the power pack

Before the first run check:

The direction of the Pump, while run the power pack for max. 2seconds.

The cooling fan of the motor has to rotate in the same direction as the arrow on the top of the motor cowling indicates.

In case of wrong rotational direction, the electrical phase in the connection box is to be changed. This check is required after every disconnection from the power source

Wiring matches with electrical and hydraulic diagrams

the electric motors (pump and cooler) are properly connected and have the prescribed rotation

the hydraulic accumulator with nitrogen gas to the specified value

aux. elements work right (thermometer, level gauge, heater)

First run (Attention – working pressure on securing valve is set by producer in accoring the hydraulic diagram):

In the short intervals activate an electric pump

check for leaks and noise

Bleed the hydraulic circuit

if possible, test the circuit function with minimum load

test the electrical equipment

during operation monitor measuring equipment, noise, height and temperature of oil in the tank

During this time a careful bleeding off for the whole hydraulic system is necessary. In case there is no bleeder port, the power pack will bleed itself after a while via the air breather on the tank or the return line filter.

After multiple start-up.

2.6.4. Filling the reservoir with hydraulic oil

Oil regulations and recommendations of the manufacturer in the technical documentation (appendix) are to be carefully observed. For standard power packs we recommend the oiltype OH-HM32 (DIN 51524) of all known oil manufacturers.

Power packs have to be filled up with clean, pre-filtered oil! The purity of the hydraulic fluid must correspond to the class 10 NAS 1638 (reachable with filter ß =75)!

Filling from container, such as barrels, backets, etc. is not recommended or permitted!

The maximum oil level will be shown on the upper marking at the dipstick or the sight level glass. Overfilling has to be prevent. The maximum filling rate of 15 l/min shouldn´t be exceed.

Oil type	Kinematic viscosity v in mm^2/s in relationship to the fluid temperatur					Freezing point
	0°C	20°C	40°C	60°C	80°C	°C
OH-HM 32	220	100	32	15	7	-40
OH-HV 32	180	67	32	17	11	-40

2.6.5. Kotevní plan / Verankerungsplan / Grounding plan

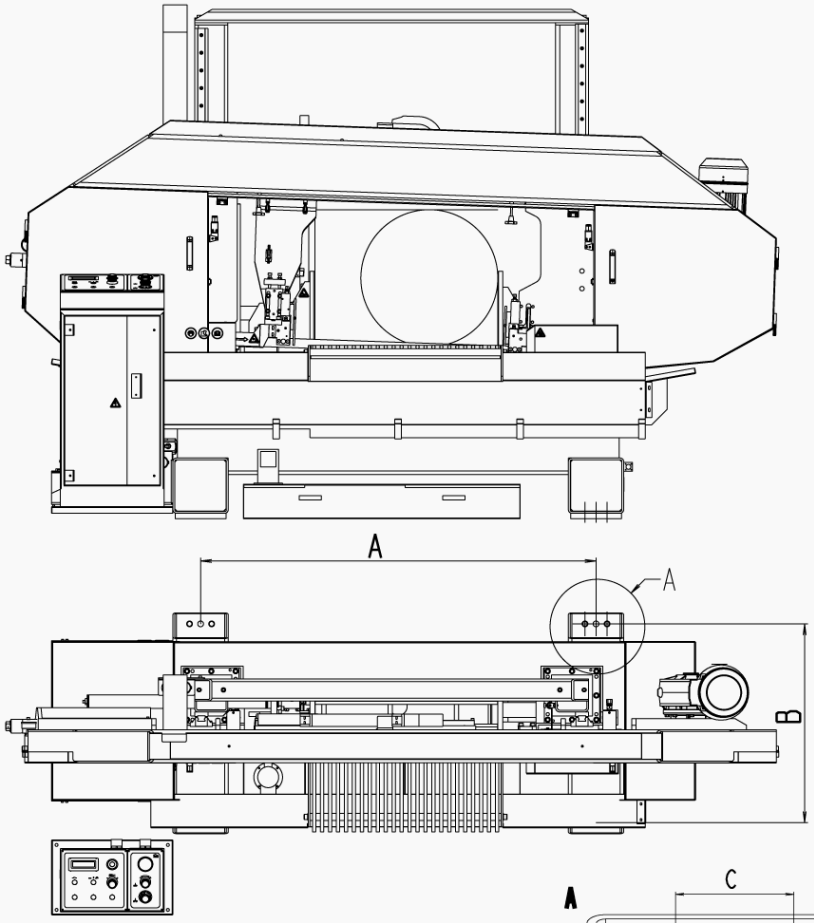

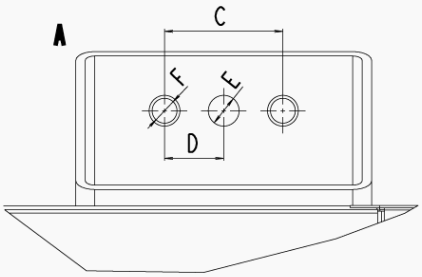

	A	B	C	D	E	F
Extend 700.520	1665	900	100	50	ø26	2× M24
Extend 800.620	1790	900	100	50	ø26	2× M24
Extend 900.720	1950	1150	100	50	ø26	2× M24
Extend1000.820	2275	1300	100	50	ø26	2× M24
Extend1120.1120	2565	1600	100	50	ø26	2× M24

Kotvící materiál / Verankerungsmaterial / Grouding material

- 4× Kotvící šroub / Verankerungsschraube / Grounding screw — M24, pos. E
- 8× Stavěcí šroub / Stellschraube / Set-screw — M24, pos. F
- Do hloubky / In die Tiefe / Into deep — 150 mm

Šrouby podložit deskami o min. rozměrech P10×100-100
- Die Schrauben mit Platten mit Minimaldimensionen P10×100-100 unterlegen
Screew must be bottomed with plates (minimal dimensions P10×100-100)

Požadavky na rovinnost podlahy / Anforderungen an die Bodenebenheit / Requirements for floor flatness

± 10 mm / 1 m

2.7. Electrical connection

Attention!
Only a qualified professional must carry out the servicing and repairs of the electric equipment! *Take special care during work with electrical equipment. High voltage shock can have fatal consequences! Always keep notes about work safety.*

Electrical parameters of the machine:

- Service voltage: ~ 3×400 V, 50 Hz, TN-C-S
- Total input / Max. fuse: 13 kW/32A

Before connecting switch off the main switch of the power supply circuit for the machine and ensure dry place when doing connecting works!

Service voltage must agree with the line voltage! Crosscut of the supply line must respond with rated current for max. machine load.

Note:
The values of the crosscut of the conductor and the rated current are in the norms.

Note:
The socket with the fork can be used only at the machines with the rated current less than 16 A and total input less than 3 kW.

Attention!
In this case the extra main switch becomes primary and the main switch on the machine has only secondary function.

In case the machine is connected with a direct connection, an extra main switch must be added which can be locked in zero position.

2.7.1. Check the direction of the saw band

After the machine has been successfully connected, briefly switch on the machine and put the driving engine of the band in the running position. The direction must be in accordance with the arrow direction on the saw band cover. In case the direction of the saw band does not match, two phases at the terminal strip must be switched.

2.8. Check machine connection into electrical network

Attention!
When you connect the machine to the electrical network observe correct connection of all phases!
ENGINE IN IN HYDRAULIC AGGREGATE CANNOT BE OPERATED WITH REVERSE TURNING MORE THEN 10 SECONDS!!!

2.9. Filling of the cooling system

Prepare the mixture of the water and the cooling liquid. Keep the concentration specified by manufacturer. Shift away the cover from the drainage hole. Fill the mixture of the water and the cooling liquid to the tank of the cooling system. Area of the tank for the cooling liquid is discovered from the chapter *Technical data*.

Let the drainage hole opened and with the sieve during operation, because it secures the right work of the cooling system. Filling the tank with the cooling liquid, take care that the liquid does not drip out of the tank and the tank does not overflowed.

2.10. Check machine function

Check, if the machine or some parts of the machine were not damaged during transport.

Check, if covers are installed and functional. Check by means of the Tenzomat if the saw band is correctly stretched. If it is necessary, you can stretch the saw band according to chapter *Selection and replacement of the saw band*. Values of the saw band stretching are on the Tenzomat. Switch on the main switch and check the motors and systems (saw band drive, hydraulic pump, cooling pump, chips conveyor).

Open and close the main vice. Turn the saw frame of the band saw from one outer position to other outer position. Raise the saw frame to the top position and drop the saw frame to the lowest position.

Start the machine with the cooling pump and let it run without load until the cooling system will be filled with cooling liquid. As soon as the cooling liquid starts to escape from the nozzles of the cooling system, the cooling system is ready for the operation. Carry one cycle of cutting without material. Check, if the machine runs with no irregularities. If all machine functions are right, the machine is ready for operation..

2.11. Saw band

Refit the saw band cover only after you have installed and tightened the saw band.

2.11.1. Saw band size

9280×54 (67)×1,6 mm

2.11.2. Selection of the saw band tooth system

The manufacturers provide the saw bands with constant and variable tooth system. The important factor for selection of the tooth system is length of the cutting canal with respect to the size of the product

1. *Constant tooth system* – the saw band has parallel tooth pitch all over length. This way is suitable for cutting of solid material.

BOMAR for recommended Variable tooth system for band saw.

2. *Variable tooth system* – tooth pitch is variable. Variable tooth system is used for profiled materials and bundle cutting. Variable tooth pitch lowers vibration of the saw band, increases service life of the saw band and quality of the cutting area.

In tables, there are advised type of the tooth system depending on sizes and form of the cutting material.

Footnotes:

Z_pZ – teeth number on one inch S – tooth with zero angle of the teeth K – tooth with positive angle of the teeth

Examples of the tooth system marking:

32 S – number „32“ means 32 teeth on one inch (that means constant tooth system), letter „S“ marks teeth with zero angle of the tooth.

4–6 K – number „4–6“ means 4 till 6 teeth on one inch
(that means variable tooth system); letter „K“ marks teeth with positive angle of the teeth.

2.11.3. Saw band running-in

Running-in: Cut the material with the frame lowering reduced to 50% only. When vibrations occur increase or decrease the band speed.

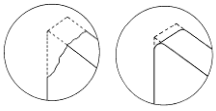

When cutting small pieces run the band until approximately 300 cm^2 of material has been cut. When cutting large pieces run the band for 15 minutes approximately. When the band has been run, increase the lowering-speed to normal speed. The running in of the saw band avoids micro-breaks on the cutting edges of new saw band ensuing from first excessive stress. This would decrease service life substantially. The optimal running in of the saw band produces ideal rounded cutting edges and therefore the conditions for an optimal service life.

Note: *Run regrinding saw bands too.*

2.11.4. Table for teeth selection

SHAPED MATERIAL (D_p, S = mm)

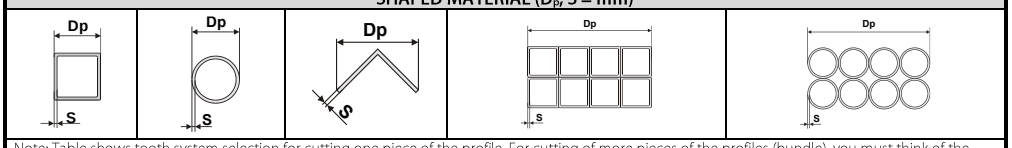

Note: Table shows tooth system selection for cutting one piece of the profile. For cutting of more pieces of the profiles (bundle), you must think of the size of the wall as double size of the wall of one profile (that means, size „S" equates to 2×S). In table, there are tooth systems constant and variable.

Size of the wall S [mm]	Tooth system (Z_pZ) Outer diameter of the profile D_p [mm]					
	20	40	60	80	100	120
2	32 S	24 S	18 S	18 S	14 S	14 S
3	24 S	18 S	14 S	14 S	10–14 S	10–14 S
4	24 S	14 S	10–14 S	10–14 S	8–12 S	8–12 S
5	18 S	10–14 S	10–14 S	8–12 S	6–10 S	6–10 S
6	18 S	10–14 S	8–12 S	8–12 S	6–10 S	6–10 S
8	14 S	8–12 S	6–10 S	6–10 S	5–8 S	5–8 S
10	-	6–10 S	6–10 S	5–8 S	5–8 S	5–8 S
12	-	6–10 S	5–8 S	5–8 S	4–6 K	4–6 K
15	-	5–8 S	5–8 S	4–6 K	4–6 K	4–6 K
20	-	-	4–6 K	4–6 K	4–6 K	3–4 K
30	-	-	-	3–4 K	3–4 K	3–4 K
50	-	-	-	-	-	3–4 K

Size of the wall S [mm]	Tooth system (Z_pZ) Outer diameter of the profile D_p [mm]					
	150	200	300	500	750	1000
2	10–14 S	10–14 S	8–12 S	6–10 S	5–8 S	5–8 S
3	8–12 S	8–12 S	6–10 S	5–8 S	4–6 K	4–6 K
4	6–10 S	6–10 S	5–8 S	4–6 K	4–6 K	4–6 K
5	6–10 S	5–8 S	4–6 K	4–6 K	4–6 K	3–4 K
6	5–8 S	5–8 S	4–6 K	4–6 K	3–4 K	3–4 K
8	5–8 S	4–6 K	4–6 K	3–4 K	3–4 K	3–4 K
10	4–6 K	4–6 K	4–6 K	3–4 K	3–4 K	2–3 K
12	4–6 K	4–6 K	3–4 K	3–4 K	2–3 K	2–3 K
15	4–6 K	3–4 K	3–4 K	2–3 K	2–3 K	2–3 K
20	3–4 K	3–4 K	2–3 K	2–3 K	2–3 K	2–3 K
30	3–4 K	2–3 K	2–3 K	2–3 K	1,4–2 K	1,4–2 K
50	2–3 K	2–3 K	2–3 K	1,4–2 K	1,4–2 K	1,4–2 K
75	-	2–3 K	1,4–2 K	1,4–2 K	1,4–2 K	0,75–1,25 K
100	-	-	1,4–2 K	0,75–1,25 K	0,75–1,25 K	0,75–1,25 K
150	-	-	-	0,75–1,25 K	0,75–1,25 K	0,75–1,25 K
200	-	-	-	0,75–1,25 K	0,75–1,25 K	0,75–1,25 K

SOLID MATERIAL (D = mm)

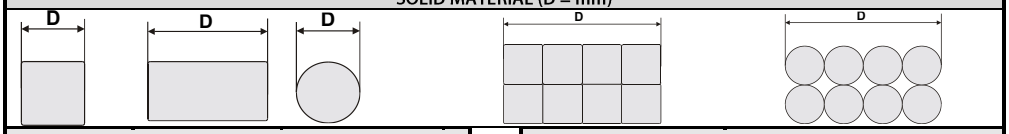

Constant tooth system	
length of the cut D	tooth system (Z_pZ)
to 3 mm	32
to 6 mm	24
to 10 mm	18
to 15 mm	14
15–30 mm	10
30–50 mm	8
50–80 mm	6
80–120 mm	4
120–200 mm	3
200–400 mm	2
300–800 mm	1,25
700–3000 mm	0,75

Variable tooth system	
length of the cut D	tooth system (Z_pZ)
to 30 mm	10 –14
20–50 mm	8–12
25–60 mm	6–10
35–80 mm	5–8
50–100 mm	4–6
70–120 mm	4–5
80–150 mm	3–4
120–350 mm	2–3
250–600 mm	1,4–2
500–3000 mm	0,75–1,25

In spite of the proposals above, consider your supplier's recommendations and ask him for professional advice although the manufacturers often recommend their own saw bands to you.

3. Machine control

3.1. Starting the band saw

» 1. Switch on the main switch of the band saw. The main switch is situated on the side of the switchboard.

2. Switch on the safety circuit of the band saw **Safety circuit** (button 2) on control panel of the band saw.

3.2. Control panel

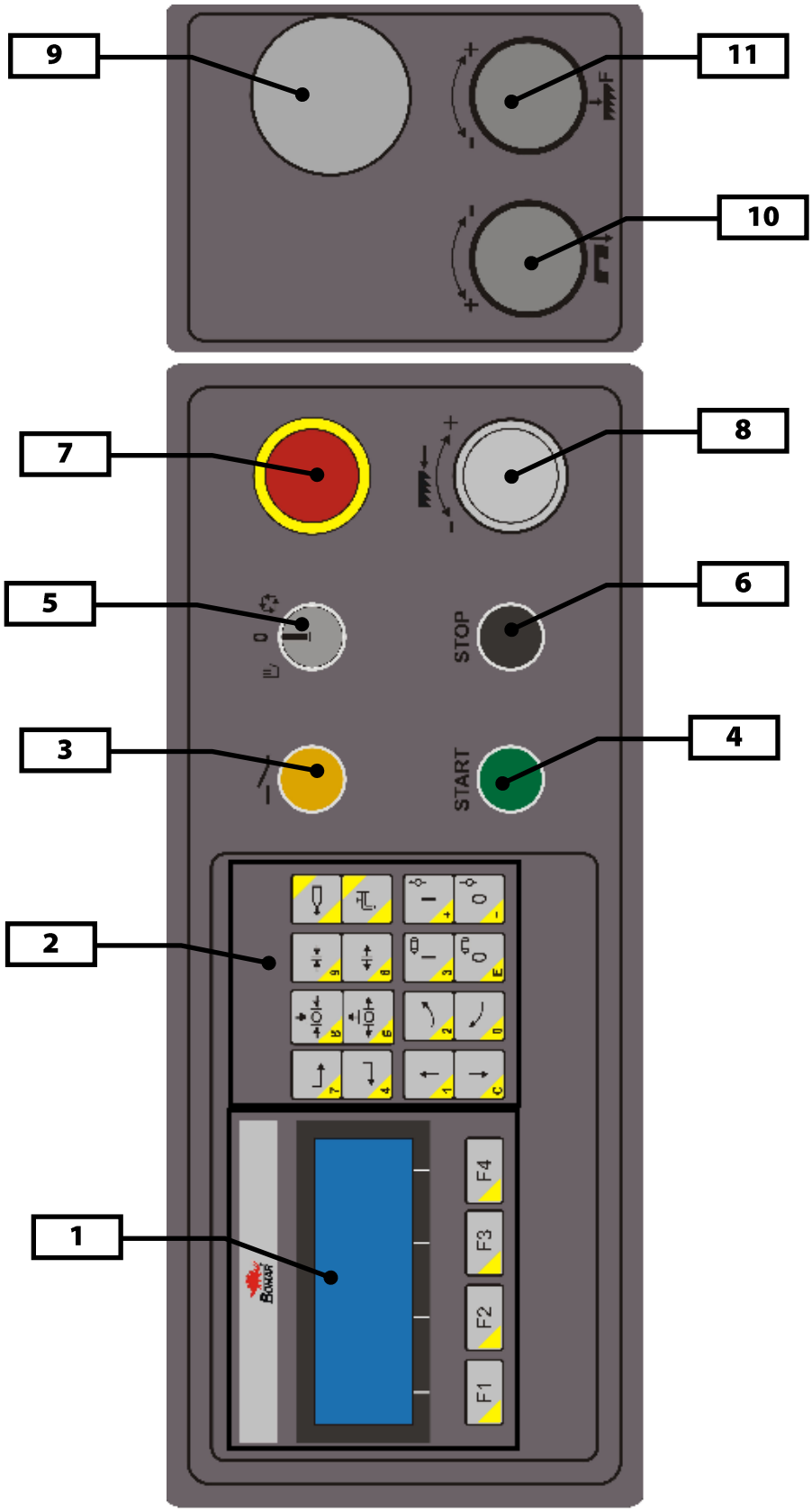

3.2.1. Control panel description

1	**LCD Display** Onto display are described all runnind processes, control with functional buttons **F1-F4**
2	**Control buttons / numeric keypad**
7 4	**No function**
8 5	**No function**
9 6	**Clamp / release vice** In manual cycle pressing and holding the button allows you to release pressure or clamping vise. . The upper clamping operates automatically with the main vice
	Cooling system selection Cooling with Microniser (optional cccessories) Cooling with water cooling pump runs even when the saw band drive isswitch off.
1 C	**Movement of the arm** Pressing and holding a button or trigger arm lifts the lifting hydraulic cylinder. When lifting the arm using the arm can be lifted in its entirety lifting cylinder. On the down can be activated by simultaneously pressing the **rapid move** functional button F1.
2 0	**No function**
I 3 0 E	**Turn on / off the band drive** In manual mode the button is displayed "I" switched band drive, the button with the symbol "0" switch off
I + 0 -	**Turn on / off the hydraulic circuit** Button with the symbol "I" turns the hydraulic circuit, the button with the symbol "0" disables the hydraulic circuit. The hydraulic circuit is automatically switched on when needed.
3	**Safety circuit** Switch on the safety circuit by pressing button.
4	**Button START - Switch on the semi-automatic cycle** After pressing the button will start the cutting cycle

5	**Selecting a mode machines** 0 for servicing and settings manual mode semi-automatic mode **Note**: The functions performed in both manual and semi-automatic mode are the same, but only in semi-automatic cycle it is possible to use the START / STOP (ie start / off cycle)
6	**Button STOP - Switch off on the semi-automatic cycle** After pressing the button will turn off the interruption or of cutting cycle
7	**Emergency Stop Switch** In emergency causes the machine must be immediately switched off.
8	**Frequency convertor** Turn to change the speed of the saw band in the range of 20-120 m / min
9	**Cutting pressure manometer** Pointer to cut pressure adjustment
10	**Cutting pressure regulation** Adjust the arm pressure to the cut. Notice: If you keep closing the throttle valve too tightly, the valve seat may wear off which causes its leakage. Therefore, close the valve always gently.
11	**Governing valve** Adjust the speed of the arm sinking to the cut by governing valve. Notice: If you keep closing the throttle valve too tightly, the valve seat may wear off which causes its leakage. Therefore, close the valve always gently.

3.3. Machine setup

Machine setup mode is activated by switch on control panel. Switch must be in **"0"** position.

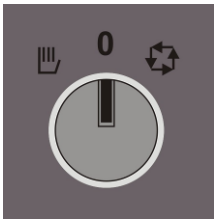

After swiching into position "0" is displayed on LCD this screen.

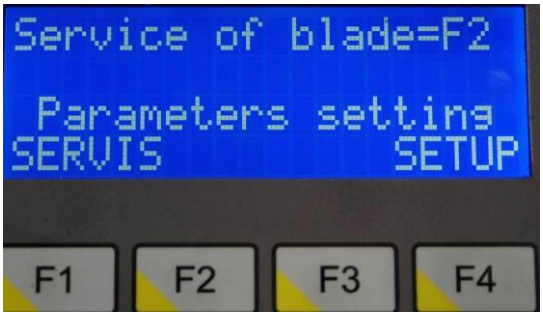

3.3.1. SERVIS

After pressing the **F1** functional key can be set servis parameters that are password protected (947).

Control and movement in SERVIS can be set using the function keys **F1 - F4.**

On display	Descriptiom
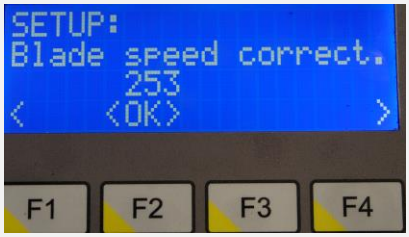	**Blade speed correction** • Constant for calculation of blade speed display values from analog input. • **F1** go back, **F4** next menu screen, **F2** enter value
	Sensor • Display variable sensor arm (optional accessories) • Use to check the functionality of the sensor on the arm • Read only • **F1** go back, **F4** next menu screen
	Vice clamping time • Watch vice clamping time in ms. • **F1** go back, **F4** next menu screen, **F2** enter value
	The type of machine. • Display the machine type (the value set by the manufacturer) • Read only

3.3.2. SETUP

After pressing the **F4** functional key can be set setup parameters that are not password protected.

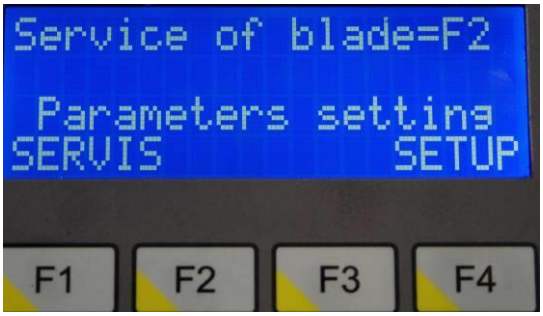

Control and movement in SETUP can be set using the function keys **F1 - F4.**

On display	Description
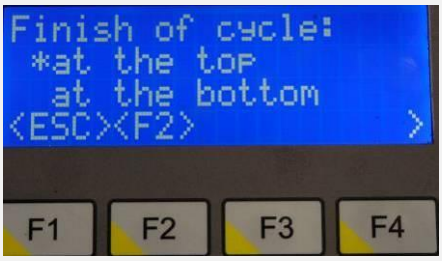	**Finish of cycle** • At the top – arm after cut starts above the material and cutting cycle ends • Athe the bottom – arm after cut remains in the lower position, the above material does not exit • **F1** go back, **F4** next menu screen, **F2** enter value
	Turn off motor after cut • Up position – saw arm move up after cut and then turn off drive of saw blade. • Down position – drive of saw band turn off immediately after cut. • **F1** go back, **F4** next menu screen
	Upper vice • Allows to able / disable the upper vice in the cutting process • **F1** go back, **F4** next menu screen, **F2** enter value
	Vice mening time • Watch vice opening time in ms. • **F1** go back, **F4** next menu screen, **F2** enter value

Upper vice opening time

- Watch upper vice opening time in ms.
- **F1** go back, **F4** next menu screen, **F2** enter value

Switch off hydraulic

- Setting the hydraulic unit off when idle machines
- **F1** go back, **F4** next menu screen, **F2** enter value

Language

- Choose menu language
- **F1** go back, **F4** next menu screen, **F2** enter value

Displaying of speed

- Displaying of band speed according to the selected units
  (m / min or ft / min)
- **F1** go back, **F4** next menu screen, **F2** enter value

3.4. Machine error messages

Error	Information
SAFETY BUTTON is OFF F1 F2 F3 F4	Saffety button (pos. 2 on kontrol panel) is not ON. Press **F4** to confirm error.
TOTALSTOP pressed F1 F2 F3 F4	Emergency Stop Switch is active. Turn button according to the arrows. Press **F4** to confirm error.
Blade tension faulty F1 F2 F3 F4	Saw blade in properly tensioned. Press **F4** to confirm error.
Faulty motor protec. F1 F2 F3 F4	Engine temperature protection is active. **Do not overload saw!** Press **F4** to confirm error.

3.5. Machine control

3.5.1. Semi-automatic cycle - – standard type

1. Turn the switc h to position for semi-automatic mode
2. Lift the saw arm to the top position by pressing button
3. Open the vice by pressing button
4. Clamp material to the vice by pressing button
5. Lower the frame about 10 mm above the material by button

> ***Attention!***
> *Do not move the saw frame to the material, when the saw band driving is not running! Do not move the saw frame to the material with accelerated motion! The saw band can be damaged!*

6. Select the max. height of the arm with limit switch.

   You can clear the register of the performed cycles by button

   and stop on 5 seconds.

7. Press button ***START*** (position ***4***) of semi-automatic cycle.

   Set the saw band speed according to the kind of the cutting material.

   Set the speed of the arm sinking by adjust governing valve (position **10**).

> ***Attention!***
> *Press button „5“ (STOP of semi-automatic cycle). In risk of injury or damage of the band saw, press the Emergency Stop Switch “10”!*

8. The band saw clamps the material to the vice and it makes the cut.
9. Open the vice. If the vice is not opened, you can open it by button
   Remove the blank ((cut off a piece of material).
10. You can repeat whole process.

3.5.2. Semi-automatic cycle - with possibility of saw frame lift stop setting using an encoder (optional accessory)

1. Turn the switc h to position for semi-automatic mode

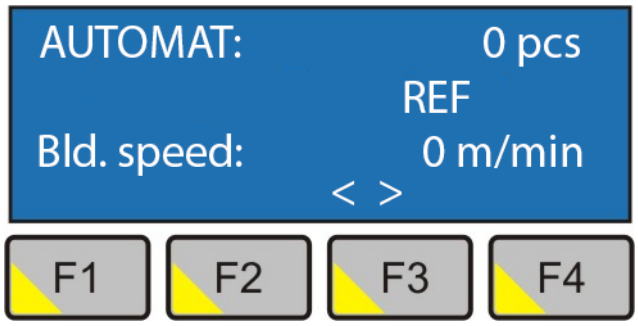

2. Lift the saw arm to the maximal top position by pressing button .
3. Open the vice by pressing button .
4. Clamp material to the vice by pressing button .
5. Press button ***START*** (position ***4***).
6. The screen appears with instruction for setting of the saw arm into start position above material.

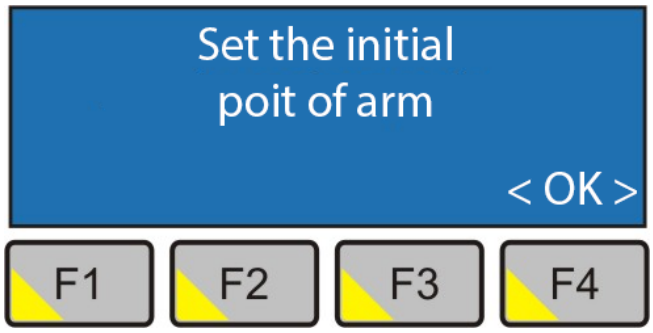

Confirm by pressing the button F4 <OK>.

7. Now lower the frame about 10 mm above the material by button ↓ c.

> ***Attention!***
> *Do not move the saw frame to the material, when the saw band driving is not running! Do not move the saw frame to the material with accelerated motion! The saw band can be damaged!*

When the saw arm is setin start position above materiál confirm the state with button F1.

8. The screen appers for start of semiautomatic cycle.

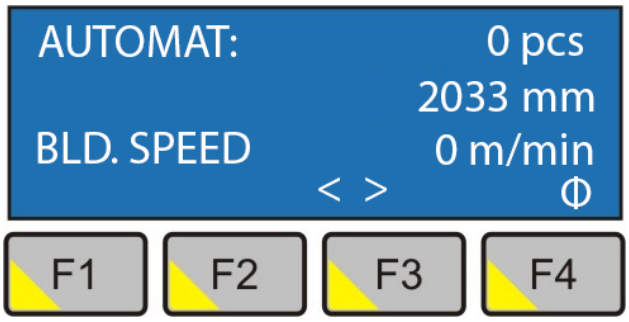

It is possible to reset the register of finished pieces by pushing the button F3 for cca 5 sec.

9. Press button ***START*** (position ***4***).

Set the saw band speed according to the kind of the cutting material.

Set the speed of the arm sinking by adjust governing valve (position **10**).

> ***Attention!***
> *Press button „5“ (STOP of semi-automatic cycle). In risk of injury or damage of the band saw, press the Emergency Stop Switch “10”!*

10. The band saw clamps the material to the vice and it makes the cut.
11. If the the possibility for finishing of the cut with the position of the saw arm above material was set in menu SETUP, arm automatically returns to a position that was set as the starting position above the material.
12. Open the vice. If the vice is not opened, you can open it by button ◄|►6.
Remove the blank ((cut off a piece of material).
13. You can repeat whole process.

3.6. Cycle breaking

» • **STOP button**

Semi-automatic cycle is interrupted by pressing button **STOP** (position **6**) of the semi-automatic cycle.

The arm is lifted to the top position and the saw band drive is stopped..

By pressing button ***START*** (position **4**) of the semi-automatic cycle, you can start the cycle.

• **Emergency Stop Switch**

In case of the risk, press button **Emergency Stop Switch** (position **7**).

After pressing button, saw band drive is immediately broken and the arm sinking is stopped.

• **Reactivation**

1. Turn **Emergency Stop Switch** according to the arrows (on the button).
2. Switch on the **Safety circuit** by button (position **3**).
3. By pressing button **START** (position **4**) of the semi-automatic cycle), you can start the cycle. The arm is lifted to the top position and the saw band starts the cycle.

3.7. Band saw adjusting

3.7.1. Cutting speed adjusting

Speed of the saw band is possible change from ***15 to 90 m/min***. You can effect to adjusting speed of the saw band following.

Use the frequency convertor ***12*** to adjust requested speed of the saw band. You can see the speed on display.

> ***Attention!***
> *At least once a week set the saw band speed from the lowest up to the highest speed.*

3.7.2. Adjustment of pressure to the cut

The band saw ***Extend 1000.820*** is equipped with cutting pressure regulation on the both guiding cubes.

Pressure adjusting is performed with regulating wheel (position **14** – control panel). The pressure to the cut is displayed on the cutting pressure manometer **13**.

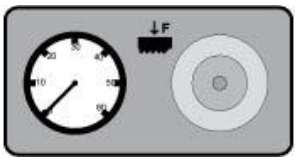

Lower pressure to the cut – turn the wheel against the clock's direction.

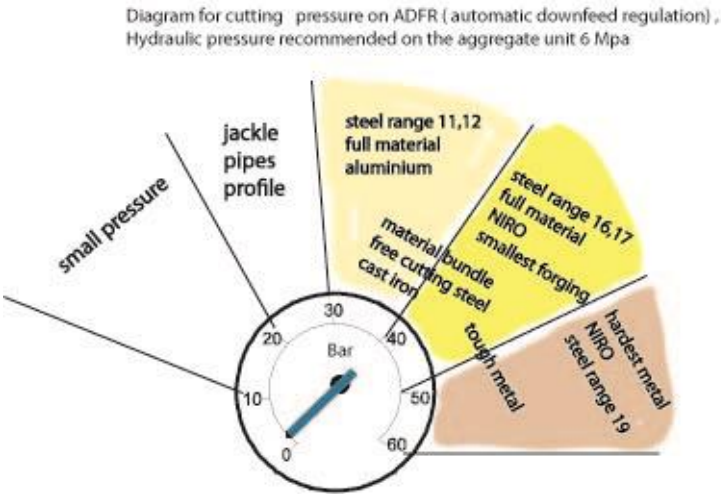

Higher pressure to the cut – turn the wheel to the clock's direction.Přítlak do řezu se nastavuje pomocí regulace **14**

3.7.3. Speed adjustment of the arm lowering

Set the speed of the arm lowering to the cut by control valve (position **15** – control panel).

Set the lower speed of the arm lowering to the cut by turning the switch clockwise.

Set the higher speed of the arm lowering to the cut by turning the switch anti-clockwise.

> ***Notice:***
> *If you keep closing the throttle valve too tightly, the valve seat may wear off which causes its leakage. Therefore, close the valve always gently.*

3.7.4. Saw frame lift stop setting – standard type

If you want to shorten the time of operations in automatic cycle, you have to adjust the height of the saw arm according to the height of the cutting material.

1. Press button **8**. Lift the saw arm to the upper position.
2. Insert a material into the vice. Carefully lower the saw arm button **9** to the material.(**8+9**-accelerated shift)..
3. Stop the saw arm 10mm above the material.
4. The lift stop setting is sensed by the limit switch.

Note:
Position of the guiding cubes is secure by the limit switch. The limit switch is activated after switch lever hits the listel.

3.7.5. Saw frame lift stop setting - using encoder (optional accessory)

To shorten cycle times in automatic mode, you can adjust the height of the lift arm according to the height of the material.

If the band saw is equipped with an encoder for positioning of the arm above the material, it is possible to adjust the position of the arm using the way which is described in the machine control (see Semi-automatic cycle - with possibility of saw frame lift stop setting using an encoder (optional accessory).

3.7.6. Brush adjustment

The brush for chip removal from the saw band influences cutting durability, saw band lifetime and wheels lifetime, hard metal guides and finally the cut accuracy. Brush adjustment must be checked every shift.

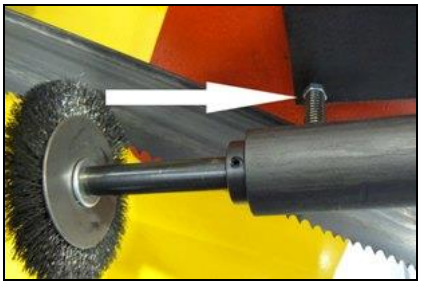

1. Release the fixative screw of the brush. It is possible to move with the brush.
2. Set the brush to the saw band according to the picture.

Attention!
*The brush **must not** touch the bottom of the saw teeth!*

3. Tighten the fixative screw.
4. In case, that the brush is not turned right (driving wheel slips on the driving wheels of the saw band), push by means of the screw (see arrow) driving wheel of the brush to the driving wheel of the saw band.

Attention!
The screw must not be tightened with heavy force, because driving wheel of the brush can be damaged or the lifetime of the bearings of the driving wheel of the band can be lowered!

3.8. Material insertion

- Never walk under a suspended load!
- Never climb onto the gravity-roller conveyor!
- Do not hold the material for clamping material to the vice! The vice can cause injury!

3.8.1. Handling agent selection

- Use the strong handling agents to lift and transfer the material!
- Handle with the material only with the lift truck or use the suspension strands and the crane!
- Do not use the lift truck or crane in case that you do not have the license to handle with it!

3.8.2. Insertion

Insert material to the vice and ensure that the material cannot move in the vice or fall from the vice after the clamping. If you cut long pieces of the material (for example rod, tube), you must use the roller conveyors for material shifting to the band saw. Contact Bomar for more information about roller conveyors

Make sure the conveyor is long enough and the material cannot tip off the conveyor.

Be especially careful with round materials that it always stays on two vertical rollers and that it cannot fall off the conveyor!

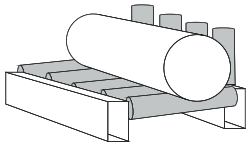

3.8.3. Bundle material cutting

If you want to cut the material in the bundle, there are suggestions for the positioning of bundles

Round material bundle: Take care especially with round material that the bars are put according to the picture. If the bars are put differently, you may have problems with movement.

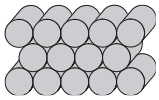

Always weld the material at the rear end of the bundle to secure it from moving.

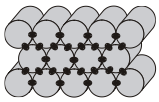

Before welding always, switch the machine off at the main switch! The magnetic fields, which often occur during welding, may damage the controls!

Square material bundle:

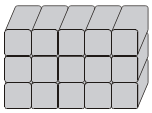

Attention:
Not all material shapes are suitable for bundle cuts. Keep the recommendation of your supplier of the saw bands for material insertion to the bundle.

4. Machine service

4.1. Saw band dismantling

Press the button **4** (**START** semi-automatic cycle)

1. Press button **8** to lift the saw arm to maximum position.
2. Switch off hydraulic by button **Stop**
3. Switch **Deblock** to position **1**
4. Open the covers of both driving wheels.

5. Open cover by 2 star screws

6. Dismantle yellow band cover..
7. Release screw tightening brush position
8. Release the saw band by pressing left button

9. Draw the saw band down from driving wheels.
10. After carefully take the saw band out of guiding cubes.

4.2. Saw band installation

1. Prior to installation, clean all track wheels, guide cubes and inner side of the arm thoroughly of all traces of chips and dirt. *Keep in mind the teeth direction when installing the saw band.*
2. Insert new saw band in the guide cubes. Make sure the saw band runs between both guide rollers and it is pushed all the way to the top.
3. Put the saw band on both guide wheels. Make sure that the saw band ridge fits tightly to the wheel rim. Then push the saw band as far back as possible.
4. Stretch the saw band by means of the screw, that the band did not falls from wheels.
5. Install yellow protective cover of the band.

6. Move the brush to the saw band. Tighten the securing screw.
7. Close the covers of both driving wheels.
8. Saw band installation is finished.

4.3. Saw band stretching and inspection

Right saw band stretching is one of the most important criteria's, which influents accuracy and saw band service life. Stretch the saw bands according to the selected saw band and the band saw. Keep the recommendation of your manufacturer.

4.3.1. Saw band stretching

Right saw band stretching is one of the most important criteria's, which influents accuracy and saw band service life. Stretch the saw bands according to the selected saw band and the band saw. Keep the recommendation of your manufacturer.

- The saw band must not fall from the wheels after setting
- Install the Tenzomat on the saw band and secure it with screws
- Stretch the saw band until it is stretched to the recommended value

4.4. Saw band run adjustment on stretching wheel

Saw band run on the stretching wheel must be regularly inspected. The inspection has to follow every saw band replacement.

4.4.1. Saw band run inspection

If the run is not correct, the following problems may occur:

The saw band falls off the wheel – The saw band and protective cover can be damaged.

The saw band runs on the wheel rim – The saw band and wheel rim can be damaged

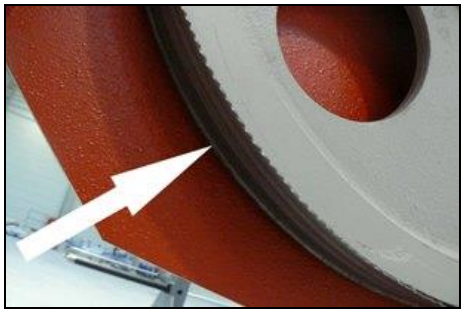

9. Start and stop saw band drive.
10. Stop the main switch!.

11. Open rear cover of the saw frame.
12. Check saw band placing on the wheels.

If the distance of the rear part of the saw band from wheel rim is **1 mm**, setting is right.

If the distance is bigger than **1 mm**, or the saw band runs on the wheel rim, saw band run must be set.

4.4.2. Saw band run setting

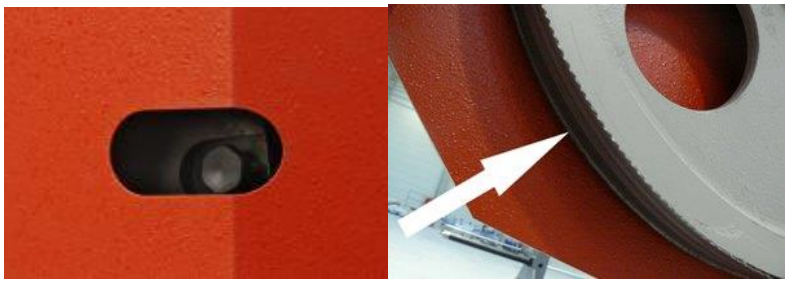

Saw band run is set with screw (arrow) in the stretching cube on the saw arm. Right distance rear part of the saw band from wheel rim is **1 – 3 mm**.

- Turn with the screw to the right, the saw band is closer to the stretching wheel rim.
- Turn with the screw to the left, the saw band is far from the stretching wheel rim

Check saw band run adjustment again.

4.5. Limit switch setting of the saw band stretching ng

The limit switch of the saw band stretching is set from the manufacturer. Is not necessary to set it. After the saw band is replaced, the limit switch setting must be checked out. If the limit switch is not set correctly, the band is stretch too much or it is to loose

Release 2 screws and check the limit switch setting -on-state

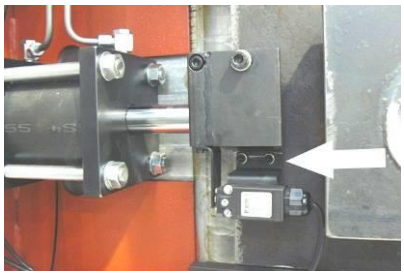

4.6. Saw arm lower position stop adjustment

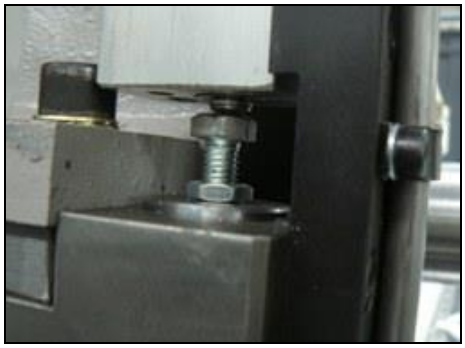

The lower stop limits the lowest position of the saw arm. This stop point has to be checked at least once a month. If the lower stop point is wrongly adjusted, the cutting table can be deeply cut or the material will not be cut completely.

1. Lift the saw frame to the top position.
2. Release the nut of the screw and set it on the desired value.
3. Secure the screw with nut again.
4. Set the limit switch of the saw frame lower position.

4.7. Adjusting of the limit switch of the saw band stretching

The limit switch of the saw band stretching is set from the manufacturer. Is not necessary to set it.

4.7.1. Setting inspection

Lower the saw frame to the lowest position. If the saw frame is on the lower stop and the limit switch responds, the limit switch adjustment is correct. Make the limit switch adjustment in failing which.

4.7.2. Limit switch setting

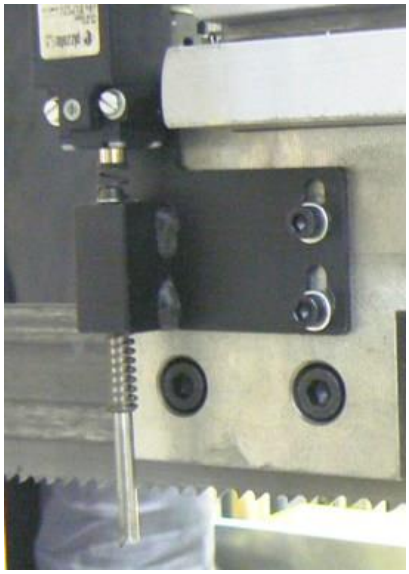

1. Release the nut of the stop screw of the limit switch and screw the screw.
2. Lower the saw frame to the lower stop and switch on the saw band drive (***button 4***).
3. Screw out the stop screw of the limit switch, until the saw band drive is not stopped.
4. Secure the screw with nut and check limit switch adjustment again.

4.8. Adjustment of the cutting pressure regulation

This chapter describes the basic speed setting of arm sinking to the cut for idle run. Saw is equipped with cutting pressure regulation on both guiding cubes. Cutting pressure regulation is set separately on every guiding cube.

4.8.1. Setting on the right guiding cube

1. Close the tap on the left guiding cube. Let the tap opened on the right guiding cube.

Left guiding cube **Right guiding cube**

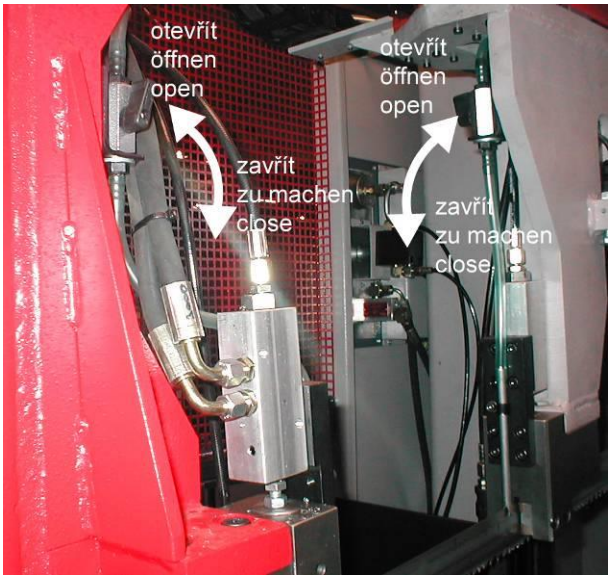

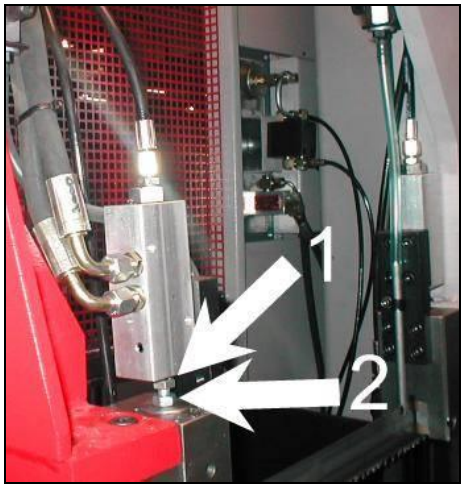

2. Screw off the set – screw on the right guiding cube to the stop, the valve is blocked (pos1). You can move by arm only up, because the arm movement down is blocked with pressure regulation valve.
3. Press button „Arm down“ and slowly screw on the set – screw on the right guiding cube. Screw by set – screw until the optimal speed of the arm sinking is not reached. The optimum speed of the arm sinking to the cut from maximum lift until lower stop is about 55 seconds.
4. Secure the set – screw with nut (pos. 2) for reaching of the optimum speed of the arm sinking.
5. Pressure regulation on the right guiding cube is set.

4.8.2. Setting on the left guiding cube

6. Open the tap on the left guiding cube. Close it on the right guiding cube.
7. Set the cutting pressure regulation on the left guiding cube in the same way.

8. Open taps on both guiding cubes after pressure regulation setting. **ATTENTION!** Both taps must be opened during operation!

9. Setting is ended.

4.9. Cooling agents and chips disposal

The quality of the cooling agent will deteriorate due to:	If the solution is too weak:	If the solution is too strong:
• use of contaminated water • impurity • outside oil contamination (hydraulics, gears) • high operating temperatures • lack of air circulation • wrong concentration	• corrosion protection is diminished • lubrication decreases • microbial attack is more likely	• the cooling ability is decreased • foam behaviour increases • emulsions stability deteriorates • sticky residue develops

4.9.1. Cooling liquid preparation

Prepare the mix of the water and cooling liquid. Conform the notes of the manufacturer and keep manufacturer-approved concentration

All instructions are stated on the tank of the cooling liquid or in documents of the cooling liquid. For cooling liquid using and liquidation reads date of cooling liquid manufacturer, which it is necessary to keep

Fill the mix of water and cooling liquid to the tank of the cooling system. The capacity of the tank for the cooling liquid is stated in chapter „**2.1**

When filling tank with the cooling liquid take care that the liquid will not drip out of the tank and the tank will not overflow

Keep manufacturer specified recommendations for adding the anticorrosive agents, the antifreeze or other agents! For mixture of two different mixes can produce toxic and aggressive mixes, which can peril your health or damage cooling system of the machine.

Note: If the machine is equipped with Microniser (see. **Special accessory**), fill the tank of the Microniser by specified cooling liquid. Microniser is ready for the operation

The quality of the cooling agent will deteriorate due to:

- use of contaminated water
- impurity
- outside oil contamination (hydraulics, gears)
- high operating temperatures
- lack of air circulation
- wrong concentration

If the solution is too weak:

- corrosion protection is diminished
- lubrication decreases
- microbial attack is more likely

If the solution is too strong:

- the cooling ability is decreased
- foam behaviour increases
- emulsions stability deteriorates
- sticky residue develops

4.10. Coolant device inspection

The state of the cooling agent has significant influence on the cutting quality and on the operational life of the machine. Lifetime of the cooling liquid is 1 year, after this time we recommend change the cooling liquid. This time is dependent on the degree of pollution cooling liquid (especially with oils) and on the other factors.

Check level of the cooling liquid and function of the pump periodically!

> ***Note:***
> *If the state of the cooling liquid is not satisfactory, the cooling liquid must be changed.*

Check the state of the cooling agent according to the following table:

Testing	Interval	Method	Condition	Precaution
Liquid level	daily	visually	too low	after concentration check, refill with water or emulsion
Concentration	daily	refractometer densimeter	too high too low	refill water refill base emulsion
Smell	daily	by sense of smell	unpleasant smell	good ventilation, add biocides or renew coolant
Contamination	daily	by sense of smell	visible oil leaks, sludge fungi	surface cleaning, fix leaks, add biocides or fungicides, or coolant renewal after added system cleanser*
Corrosion-protection	when necessary	visually chip test Herbert-test	insufficient corrosion protection	test stability, if necessary – increase concentration or pH value
Stability	when necessary	refractometer	oiling	add concentrate, enquiries to supplier
Foam reaction	when necessary	shaking test	too much foam, foam disperses too slowly	avoid aeration, increase water hardness, ix with defoamer

* according to manufacturers' instructions

4.10.1. Chips disposal

Chips resulting from cutting operations must be disposed of in accordance with the relevant regulations.

- Let the chips drip excess fluid!.
- Fill a watertight container with the chips! Be careful that the container does not leak, because even after a long dripping time, they still contain coolant residue.
- *Place the container into the care of a disposal company equipped for the disposal of chips contaminated with cooling liquid.* In case the machine is equipped with micro-spray installation, the chips must also be handed over to a disposal company.

4.11. Hydraulic, Greases and oils

4.11.1. Gearbox oils

In gearboxes, oil is used for the whole lifetime of the gearbox. We recommend replacing of the filling oil in case of repair.

Use oils with specification DIN 51517 in the gearboxes. Select the viscosity grade ISO VG according to the original oil fill.

Attention:
When replacing, use oils recommended by BOMAR or oils, which has comparable parameters from the other manufacturers. Do not forget, that mineral and synthetic oils must not be mixed!

Recommended oils and quantity according to the type of the band saw

Band saw	Gearbox oil	Capacity
Extend 1000.820	Shell Tivela S 320	3,3 l
Swarf conveyor	Shell Tivela S 320	0,075 l

Comparative table of the gearbox oils

Manufacturer	Viscosity grade		
	ISO VG 100	ISO VG 220	ISO VG 320
BP	Energol GR-XP 100	Energol GR-XP 220	Energol GR-XP 320
Castrol	Alpha SP 100 Alpha MW 100	Alpha SP 220 Alpha MW 220	
Elf	Reductelf SP 100	Reductelf SP 220 Reductelf Synthese 220	Reductelf SP 320
Esso	Spartan EP 100	Spartan EP 220	Spartan EP 320
Mobil	Mobilgear 627	Mobilgear SHC 220 Mobilgear 630	Mobilgear 632
ÖMV		PG 220	
Paramo	PP 7	Paramo CLP 220	Paramo CLP 320
Shell	Shell Omala 100	Shell Omala 220 Shell Tivela S 220	Shell Omala 320 Shell Tivela S 320
Total	Carter EP 100	Carter EP 220	Carter EP 320

4.11.2. Lubricant greases

We recommend using lithium based saponified grease, class NGLI-2 for lubrication. Different greases are mixable, if their oil bases and consistence type are identical.

Comparative table of the lubricant greases:

Manufacturer	Type of the lubricant grease
BP	Energrease LS - EP
DEA	Paragon EP1
Esso	FETT EGL 3144
	Beacon EP 1
	Beacon EP 2
FINA	FINA LICAL M12
Klüber	Microlube GB0
	Staburags NBU8EP
	Isoflex Spezial
Optimol	Optimol Longtime PD 0, PD1, PD2
Shell Aseol AG	ASEOL Litea EP 806-077
Texaco	Multifak EP1

4.11.3. Lubrication

There are several placing on the machine, which are necessary to grease periodically. It secures the right function of the machine.

Lubrication place	Lubrication
	The guiding cubes leading – grease with oil from both sides once a week.
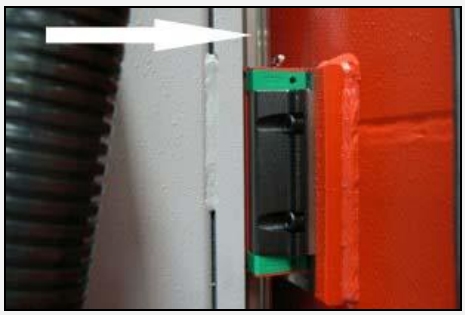	The linear guiding of the saw arm – lubricate with grease once a three months (see chapter **Lubricant greases**). Use 3-5g grease on the every carriage of the linear guiding. Use the grease gun to the lubrication. Drive 3-5 times whole line of the linear guiding during lubrication.

4.11.4. Hydraulic oils

Replace the hydraulic oil once in 2 years, because the oil can deteriorate its properties and cause problems the hydraulic equipment. If the hydraulic system is equipped with filter (2SF 56/48-0,063), replace the filter too.

Use oils with specification DIN 51524-HLP, ISO 6743-4 and viscosity grade ISO VG 32 in hydraulic aggregates. Hydraulic oils quantity – see chapter **Hydraulic oil level check**.

Note:
When replacing, use oils recommended by BOMAR or oils, which has comparable parameters from the other manufacturers. Do not forget, that mineral and synthetic oils may not be mixed!

Comparative table of the hydraulic oils

Manufacturer	Type	Manufacturer	Type
Agip	Oso 32	Ina	Hidraol 32 HD
Aral	Vitam GF 32	Klüber	Lamora HLP 32
Avia	Avilub RSL 32	Hungary	Hidrokomol P 32
Benzina	OH-HM 32	Mobil	Mobil DTE 25
BP	Energol HLP 32	ÖMV	HLP 32
Bulgaria	MX-M/32	Poland	Hydrol 30
Castrol	Hyspin AWS 32	Rumania	H 32 EP
Čepro	Mogul HM 32	Russia	IGP 30
DEA	Astron HLP 4hy6	Shell	Tellus Oil 32
Elf	Elfolna 32	Sun	Sunvis 846 WR
Esso	Nuto H 32	Texaco	Rando HD B 32
Fam	HD 5040	Valvoline	Ultramax AW 32
Fina	Hydran 32		

4.11.5. Hydraulic unit service

After 50 hours working time, or the latest 3 month after the first run, the first service should be carried out. This includes:

checking off all screws and connections, fixing points, tubes and hoses for leakage

Cheb hydraulic oil level

During time of duty the oil temperature shouldn´t exceed 60-70°C

check function of signaling components (thermometer, level gauge, dirty filter indicator)

Check the adjustment of working pressure

To realise a high reliability of the power pack, the manufacturer lays down following inspection intervals

Interval	daily	weekly	monthly	three monthly	six monthly	annually
Hydraulic fluid						
Level	-	•	-	-	-	-
Temperature	-	•	-	-	-	-
Condition	-	-	•	-	-	-
Change interval	-	-	-	-	-	•
Filter						
Change interval	-	-	-	-	-	-
Other checks						
External Leakages	•	-	-	-	-	-
Contamination	•	-	-	-	-	-
Damages	•	•	-	-	-	-
Noise-(level)	•	-	-	-	-	-
Gauges	-	-	•	-	-	-

4.11.6. Hydraulic oil level check

Pull up the gauge and check the state of the oil. The oil level must be situated between water-glas.

Fill the hydraulic oil, if it is necessary. Use always the filter (10 μm or better) when you fill the oil. You avoid impurities penetration to the hydraulic system and troubles in hydraulic system.

4.12. Machine cleaning

Clean the machine from the cooling liquid and impurities after every shift stopping. Conserve the guiding surfaces, mainly.

- Clamping jaws guiding of the vice.
- The guiding of the feeder.
- Loading surface of the vice.

4.13. Worn pieces replacement

4.13.1. Pushing bearing replacement

If it is impossible to adjust the bundle gripping assembly and the pushing bearing is worn, it needs to be replaced.

The bearing condition is possible discover, on the cube from the bottom side, for a better inspection is possible to put out the holder of the bearing from the cube.

If the bearing is worn, there is a visible channel on it.

Bearing replacement:

1. Dismantle the saw band.

2. Disconnect the hose from the cooling agent.

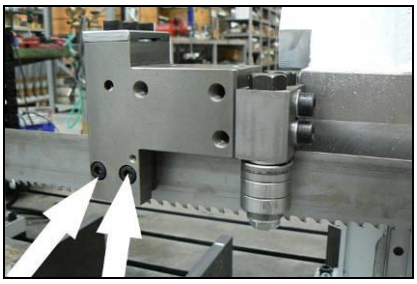

3. Release 2 Screws.

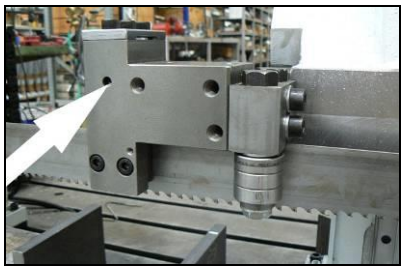

4. Release the fixative pin of the bearing holder.

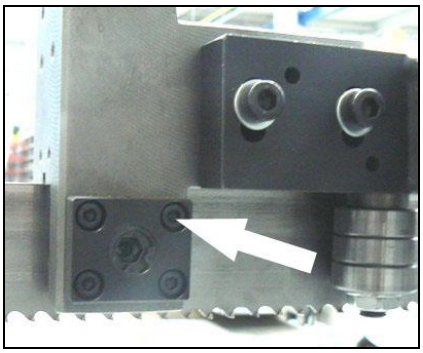

5. Release 4 screws.

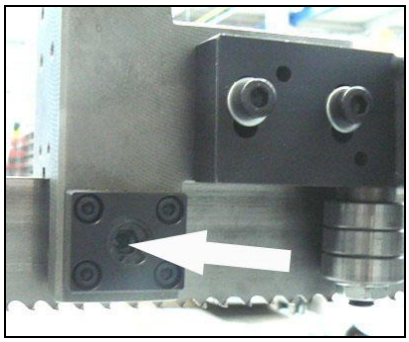

6. Release centric screws M10..

Attention:
The vice has aluminium jaws, eventually, there has to be an aluminium agent to protect the pivot from damage.

7. Insert the pivot to the vice.
8. Remove the bearing pivot from the bearing holder by means of the swager.

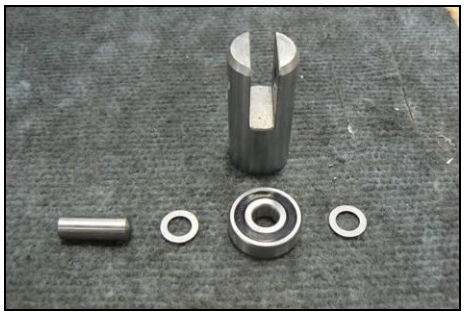

9. Remove the worn bearing.

Attention:
The vice has aluminium jaws, eventually, there has to be an aluminium agent to protect the pivot from damage.

10. Fasten the holder to the vice.
11. Insert the bearing and washers and return the pivot to its original place.
12. The pivot may not extend past the holder; otherwise, the bundle gripping assembly regulator gets worse.

4.13.2. Saw band guiding pulleys replacement

If the saw band is not sufficiently guided by guiding pulleys or if the pulleys are obviously worn, the pulleys should be replaced.

Attention:
Guiding pulleys must be replaced together on both guiding cubes!

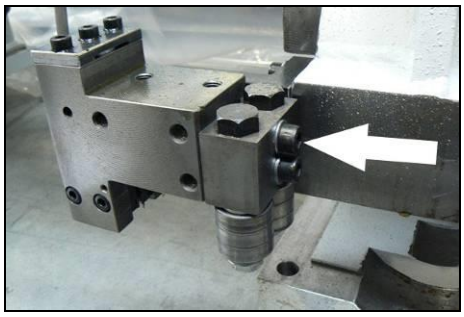

1. Release 2 screws. Dismantle the guiding cube of the saw band.

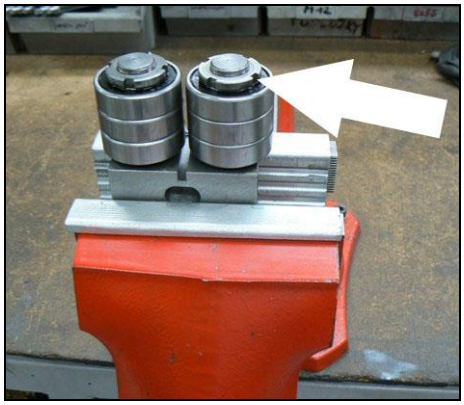

2. Tighten the guiding cube to the vice and dismantle both eccentrics with bearings following way.

Attention:
Mark both eccentrics placing and components on the eccentric!
Eccentrics must not be replaced with each other!

3. Screw off nuts from eccentrics.
4. Remove eccentrics from bearings by means of the swager.

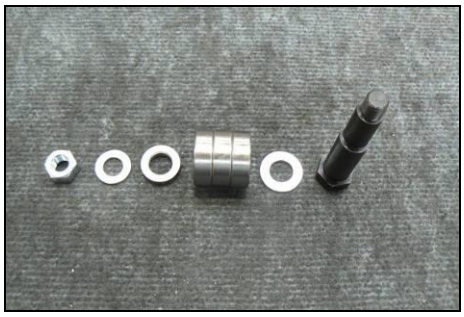

5. Change all bearings and other worn parts.
6. Install eccentrics to the cubes. Install components on both eccentrics in given order. Put bearings by means of the preparation on eccentrics.

Attention:
Do not replace the eccentrics placing in the cube.

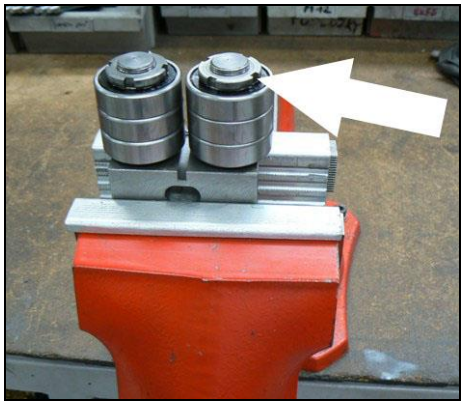

7. Screw on nuts on both eccentrics and tighten them.

8. Insert the saw band to the guiding cube (cca 15 – 20 cm). Secure the movable hard metal guide with scotch so, that the saw band is pressed with guides and it is possible to move with saw band.
9. Set the eccentrics by means of the wrenches, the saw band must run in the centre. Guide pulleys must not press too much on the band, but must spin freely during the band run.

   Optimal distance between the band and the pulley is 0,05 mm.
10. Tighten nuts on both eccentrics.
11. Remove the testing piece of saw band from the cube lead. Install the guiding cube on the machine.

4.13.3. Hard metal guides replacement

If the hard metal guides cannot be adjusted, they have to be replaced.

ATTENTION! Hard metal guides must be replaced together on both guiding cubes!

1. Disconnect the hose from the cooling agent.

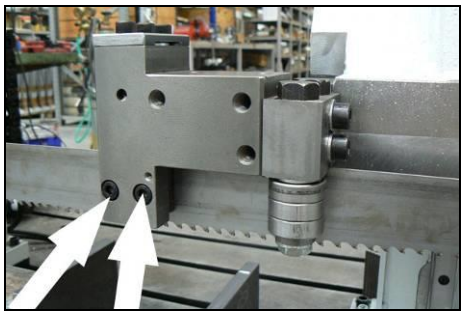

2. Release 2 screws.

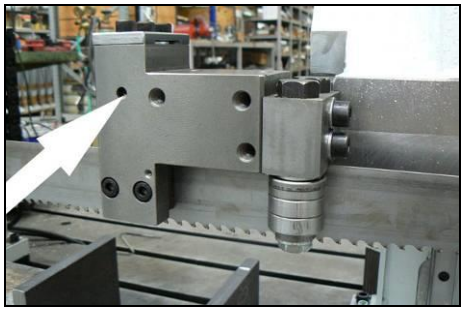

3. Release the fixative pin of the bearing holder.

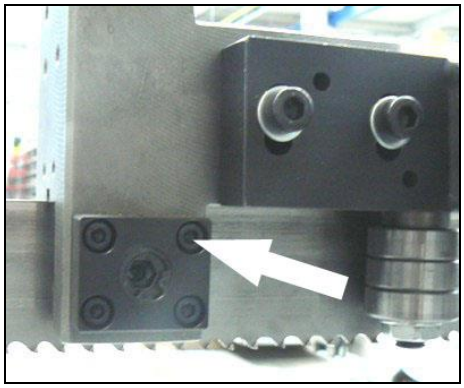

4. Release 4 screws.

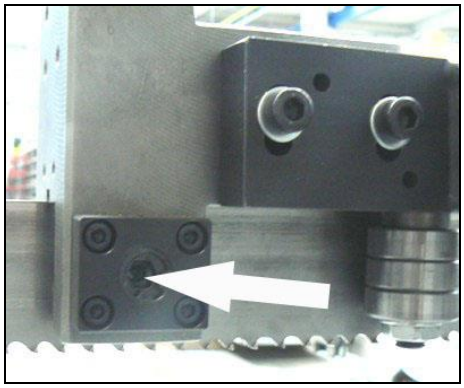

5. Release centric screws M10..

6. Dismantle the fixed hard metal guide.

7. Remove the movable hard metal guide and 8 disk springs.
8. Insert the new movable hard metal guide.
9. Screw on the fixed hard metal guide.
10. Hard metal guides replacement is ended.

4.13.4. Brush replacement

If the chip removing brush is not able to fulfil its function, it has to be replaced.

1. Hold shaft of the brush by wrench.

2. Release the nut on the brush, replace worn brush on the new brush, screw on the nut.
3. Set the brush to the saw band.

5. Závady / Troubleshooting

5.1. Mechanical problems

Problem	Possible causes	Repair
1. Slanting cut	- Wrongly adjusted hard metal guides.	Set according to the chapter „Servicing and adjustment“
	- Worn hard metal guides.	Replace to the chapter „Worn pieces replacement“
	- Wrongly adjusted cubes of the saw band guiding.	Set according to the chapter „Servicing and adjustment“
	- Worn bearings of the saw band guiding.	Replace according to the chapter „Worn pieces replacement“
	- Wrongly adjusted swarf brush.	Set according to the chapter „Servicing and adjustment“
	- Worn swarf brush.	Replace according to the chapter „Worn pieces replacement“
	- Insufficient saw band stretching.	Rise the saw band stretching and set the limit switch.
	- Wrongly chosen tooth system of the saw band.	Replace the saw band and keep the instructions of manufacturer on new saw band choice.
	- Worn saw band.	Replace the saw band.
	- Wrongly balanced roller conveyor.	Set the roller conveyor.
	- Dirty feeding board.	Cleanse the feeding board from debris, chip and residue material.
	- Guiding arm and guiding cube are loosened.	Clamp the guiding arm.
	- Guiding arm and cube are too far from the material.	Set the guiding cube to the material.
	- Too fast cutting rate.	Lower the material feeding speed.
	- Unexpected oscillation in material quality.	Set the cut and feeding speed to the relevant material.
2. The cut is not cut upon desired angle	- Securing lever is loosened.	Check the securing lever efficiency and carry out its adjustment according to chapter „Servicing and adjustment“.
	- Set angle does not match the cut angle.	Check the angle adjustment with a protractor and possibly set it according to chapter „Servicing and adjustment“.
	- Insufficient saw band stretching.	Stretch the saw band and set the limit switch according to chapter „Servicing and adjustment“.
	- Guiding arm and guiding cube are loosened.	Fasten the guiding arm and the cube.
	- Dirt between material and clamping jaw.	Cleanse the material and mating jaw.
3. Short lifetime of the saw band	- Insufficient saw band stretching.	Raise the tightening of the saw band set the scanner of saw band tightening according to chapter „Servicing and adjustment“.
	- Worn swarf brush.	Check the swarf brush condition and replace it in case of excessive use as described in chapter „Worn pieces replacement“
	- Wrongly adjusted swarf brush.	Check swarf brush adjustment, set it according to chapter „Servicing and adjustment“
	- Over stretched saw band	Lower stretching of the saw band and set the limit switch of the saw band stretching according to chapter „Servicing and adjustment“
	- Wrongly adjusted hard metal guides.	Check the adjustment of the hard metal guides and carry out adjustment as described in chapter „Servicing and adjustment“
	- Worn hard metal guides of the saw band.	Check the condition of the hard metal guide and if it is too worn, replace hard metal guides according to chapter „Worn pieces replacement“

Problem	Possible causes	Repair
	- Worn saw band guide bearings.	Check guiding bearings and if you notice some sort of excessive damage, replace them according to chapter„Worn pieces replacement“
	- Wrongly adjusted guiding cubes of the saw band.	Set guiding cube according to chapter „Servicing and adjustment“
	- Wrongly adjusted down feed and saw band speed.	Adjust the feeding and speed of a saw band according to values published by saw band manufacturer.
	- Different material quality.	Adjust feeding and speed of a saw band according to desired material (try cut-test).
	- Low-class saw band	Replace the saw band (contact your local accessory supplier for more information)
	- Wrongly chosen saw band tooth system.	Replace the saw band and keep instructions of the manufacturer on the choice.
	- Wrongly adjusted tracking.	Check the space between top of a saw band and driving wheel. Perhaps adjust the tracking as described in chapter „Servicing and adjustment“
4. Insufficient cut output.	- Worn saw band.	Replace the saw band and keep instructions of the manufacturer on the choice.
	- Wrong saw band tooth system.	Replace the saw band and keep instructions of the manufacturer on the choice.
	- Wrongly set down feed and speed of a saw band.	Set feed and speed of a saw band according to values published by saw band manufacturer.
5. The cut is not finished.	- Wrongly adjusted lower stop point of the saw frame.	Check lower limit switch and screw.
	- Stop point surface is messed-up.	Cleanse stop point surface of the limit switch from debris and residue material.
6. By choke is not possible turn	- Metal clamps between valve and panel.	Clamps must be removed and put on the shaft O-Ring about 10x2 mm.
	- Metal clams are in body of valve.	Valve must be cleared or changed.
7. Saw band drive cannot be started.	- Pressure switch is adjusted wrong.	Set the pressure switch according to chapter „Servicing and adjustment“
	- Pressure switch is defective.	Replace defective parts of the pressure switch.
8. The saw bands are cracked.	- In stretching wheel is wrong adjusting geometry.	Adjust distance band from recess wheel c.2 mm according to operating instructions.
	- Hard metal plates of circuit saw band are not adjusting.	Hard metal plates of circuit saw band must be adjusting according to operating instructions.
	- Guiding cubes are not adjusting (bearings + hard metal circuit)	Guiding cubes must be adjusting (bearings + hard metal circuit) according to operating instructions.
	- Bearings of guiding cubes are used (rolling elements are damaged or outside ring of bearing has conical form).	Bearings of guiding cubes must be replaced. Bearings must be adjusting according to operating instructions.
9. Damage tooth system of the saw band	- In gripping the lifting cylinder is backlash.	
	- Squeezed pin upper or downer holder of the lifting cylinder.	Exchange complete upper or downer holder of lifting cylinder.
10. The saw is cut downing.	- Geometry of hardmetal guiding cubes is wrong adjusted.	Hardmetal guiding cubes must be adjusted.
	- Bearings of guiding cubes are used.	Bearings of guiding cubes must be replaced.
11. Cleansing of the saw band is not functional.	- Elastic wheel of the brush drive is worn-down.	Elastic wheel of the brush must be changed.
	- Knurling of the driving wheel is worn-down.	Driving wheel must be changed.
	- The shaft of the brush drive is rusted.	The shaft of the brush must be cleaned and oiled.

Problem	Possible causes	Repair
	- The brush position and the brush cover is adjusted wrong – with the brush cannot be turned.	The brush cover must be posed, in order to the brush can be turned.
12. The saw arm periodically rise and fall during the cut; this cause short lifetime of the saw band.	- Backslash in driving wheel lodgement on the shaft.	Change the driving shaft for a long one, new bearings, distance ring, new driving wheel, spring, two covers on the forehead of the shaft + screws.
	- Worn channel for spring.	

5.2. Electric problems

Problem	Possible causes	Repair
1. Machine is not possible start.	- In socket is not voltage	Line voltage must be checked.
	- Transfer relay is closed (thermal protector)	Each FA relay must be checked.
	- Limit switch of saw band stretching, cover of frame or cover of saw band is not started.	Check of saw band stretching and covers closing.
2. When cut is finished, the frame is not raising.	- Bottom limit switch is adjusted wrong.	Bottom limit switch must be adjusted according to chapter ADJUSTING.
	- In hydraulic (pneumatic) ring is error. HYTOS (BOSCH) is not acting to frame uplift.	Function of magnetic valve must be checked, valve must be closed, voltage of clamps and inductor must be checked.
3. Electric motor and pump are without voltage. Between contactor and thermal protector is not voltage.	- Wrong contactor.	Replace contactor of engine.
4. The indicator of speed saw band is not functional.	- Sensor of speed is not adjusted.	Sensor of speed must be adjusted.
	- Defective display	The display must be changed.
	- Wrong sensor – diode of indicator speed is not light.	Sensor must be changed and adjusted.
5. Protector is switched off from engine hydraulic aggregate MA3 sometimes.	- Into hydraulic system is high working pressure.	Service engineer must reduce the pressure in hydraulic system.
6. The hydraulic aggregate cannot be started	Auxiliary contact on thermo-relay FA1 is defective.	Replace the defective contact on motor starter FA1.
7. Hydraulic aggregate is switched on but the saw arm or the main vice is not functional	- Wrong connection of electrical supply. The electrical phases are connected conversely.	The phases must be switched. Only service engineer can do this.
8. Cooling is not active	Lack of cooling agent.	Fill the tank with cooling agent.
	- Thermal relay is defective	Change the thermal relay
	- Input hosepipe is broken or obstructed.	Check the cooling circuit and perhaps cleanse cooling system.
	- Cooling pump protection is defective	Check the protection of cooling pump if need change it.
	- Cooling pump is defective.	Replace the cooling pump.

5.3. Hydraulic problems

Problem	Possible causes	Repair
1. Hydrogenerator not supplying oil	• reverse rotation	Check the connections of each phase. Reconnect properly connection of the electrical phases.
	• shortage of oil in the tank	Add hydraulic oil
	• Oil viscosity does not correspond prescribed viscosity value	Change hydraulic oil.
	• Hydrogenerator malfunction	Call service
	• Wrong power supply connection.	Check the connections of each phase. Reconnect properly connection of the electrical phases.
2. Hydraulic oil contains bubbles	• Hydraulic circuit is not adequately deaerated	Make deaeration of hydraulic circuit.
	• Low oil level	Add hydraulic oil
	• the pump shaft seals damaged	Call service
3. Increased mechanical noise	• damaged joint drive	Call service
	• damaged or destroyed motor bearings	Call service
	• air intake	Check for leaks.
4. Low pressure, pump supplies oil	• problem in the safety valve	Wrong settings. Check the settings and adjust the safety valve.
	• pump wear	Call service
	• external or internal leakage	Call service
5. Hydrogenerator is seized	• damage by solid particles in oil	Make oil filtration, or call the service.
	• non-prescribed oil	Change hydraulic oil.
	• wrong type of oil	Change hydraulic oil.
	• exceeding the life of the pump	Call service
6. Overheating oil	• cooler malfunction	Check the cooler function or call service.
	• wear the pump, the energy is converted into heat	Call service
7. Hydraulic valve can not be readjusted	• electromagnet has no signal (voltage) - interrupted supply lines	Check again.
	• Electromagnet coil burnt	Replace coil – Call service.
	• spool valve sticking	Replace valve – Call service

6. Schémata / Schemas / Schematics

6.1. Elektrické schema /Elektroschema /Electric scheme

Obsah / Table of contents / Inhalt

Strana Page Seite	Název strany Page name Seitenname	Datum Date Datum
/1	Úvodní strana / Start page / Startseite	05.03.2019
/2	Obsah/ Table of contents/ Inhaltsverzeichnis	05.03.2019
/3	Kusovník artiklů / Parts list / Artikelstückliste	13.10.2016
/3.a	Kusovník artiklů / Parts list / Artikelstückliste	05.03.2019
/3.b	Kusovník artiklů / Parts list / Artikelstückliste	05.03.2019
/3.c	Kusovník artiklů / Parts list / Artikelstückliste	05.03.2019
/3.d	Kusovník artiklů / Parts list / Artikelstückliste	05.03.2019
/3.e	Kusovník artiklů / Parts list / Artikelstückliste	05.03.2019
/4	I/O řídící systém / I/O Control station / I/O Steuerung	13.10.2016
/5	Rozmístění prvků v rozvaděči R1/ Placement of elements in enclosure R1/ Platzierung der Elemente im Schaltschrank R1	05.12.2016
/6	Ovládací panel na rozvaděči / Control panel / Bedienpult	17.10.2016
/7	Silová část M1 / Power part M1 / Feld partie M1	05.03.2019
/8	Silová část M2,M3 / Power part M1,M2 / Feld partie M1,M2	05.03.2019
/9	Silová část M4 / Power part M4 / Feld partie M4	05.03.2019
/10	Deska zdroje / Power board / Netzgerat-Platte	05.03.2019
/11	Stykače motorů, M5 / Motor contactor, M5 / Motor-Schutzschalter, M5	30.11.2018
/12	Hydraulické ventily / Hydraulic valve / Hydroventil	05.03.2019
/13	Hydraulické ventily / Hydraulic valve / Hydroventil	20.06.2018
/14	Vstupy / Inputs / Eingänge	05.03.2019
/15	Tlačítka ovládací panel / Button control panel / Taste Bedienpult	05.03.2019
/16	Bezpečnostní okruh / Safety circle / Sicherheitsbereich	05.03.2019
/17	Laserová závora / Laser barrier / Laserlichtschranke	20.06.2018
/18	Řídící systém / Control system / Steuersystem	05.03.2019
/19	Snímač výšky ramene / Arm height sensor / Arm Höhensensor	13.10.2016
/20	Příslušenství / Accessories / Zubehör	20.06.2018
/21	SyncFree / SyncFree / SyncFree	05.03.2019

Kusovník artiklů / Parts list / Stückliste

Označení přístroje Device identification Geräteidentifikation	Typ přístroje Device description Gerätebeschreibung	Objednací číslo Type number Typennummer	Výrobce Manufacturer Hersteller	Skladové číslo Part number Lagernummer	Množství Quantity Menge	Umístění Location Stelle
-ZD1	Napájecí zdroj - 15VAC/24VDC; 20VAC/28VDC Power supply unit - 15VAC/24VDC; 20VAC/28VDC Netzteil - 15VAC/24VDC; 20VAC/28VDC	ZDR-03	Bomar	265.915	1	/10.2
-BM1	Bezpečnostní relé 24VDC, 3NO Safety relay 24VDC, 3NO Sicherheitsrelais 24VDC, 3NO	BT50	ABB	91.051.063	1	/16.5
-CU1	Klávesnice - fóliová Touch-sensitive keyboard Folientastatur	31.R230-207	AKI ELECTRONIC,spol.s.r.o.	31.R230-207	1	/18.0
-FA1	Motorový spouštěč - 6.3A Motor starter - 6.3A Motorstarter - 6.3A	MS116-6,3	ABB	91.045.023	1	/7.4
-FA2	Motorový spouštěč - 0.4A Motor starter - 0.4A Motorstarter - 0.4A	MS116-0,4	ABB	91.045.017	1	/8.2
-FA3	Motorový spouštěč - 1A Motor starter - 1A Motorstarter - 1A	MS116-1,00	ABB	91.045.019	1	/8.6
-FU1	Pojistka trubičková - 500mA/250V, pomalá, 5x20 Tube fuse - 500mA/250V, slow, 5x20 Rohrsicherung - 500 mA / 250 V, langsam, 5x20	T500mA/250V	ESKA	91.230.011	1	/10.4
-FU4	Pojistka trubičková - 6,3A/250V, pomalá, 5x20 Tube fuse - 6,3A/250V, slow, 5x20 Rohrsicherung - T6,3A / 250V, langsam, 5x20	T6,3A/250V	ESKA	91.230.002	1	/10.4
-RP1	Potenciometr 4k7 Potenciometer 4k7 Potentiometer 4k7	TP195 4k7/N20A	Elektronické součástky CZ, a.s	91.283.015	1	/9.6
-RP1	Hlavice potenciometru - 24mm Head of potentiometer 24mm Leiter Potentiometer 24mm	S8877 BLK	GES-ELECTRONICS, a.s.	91.060.063	1	/9.6
-RCF1	Filtr RFC vývodový Efferent RFC filter Ableitenden RFC Filter	FBOPR1624	Ing. Miroslav Vlček	91.041.015	1	/7.3
-RCF2	Filtr RFC vývodový Efferent RFC filter Ableitenden RFC Filter	FBOPR1624	Ing. Miroslav Vlček	91.041.015	1	/8.1

The manufacturer reserves right to use an equivalent replacement device.

2

Kusovník artiklů / Parts list / Stückliste

Označení přístroje Device identification Geräteidentifikation	Typ přístroje Device description Gerätebeschreibung	Objednací číslo Type number Typennummer	Výrobce Manufacturer Hersteller	Skladové číslo Part number Lagernummer	Množství Quantity Menge	Umístění Location Stelle
-RCF3	Filtr RFC vývodový Efferent RFC filter Ableitenden RFC Filter	FBOPR1624	Ing. Miroslav Vlček	91.041.015	1	/8.5
-RCF11	Filtr RFC vývodový Efferent RFC filter Ableitenden RFC Filter	FBOPR1624	Ing. Miroslav Vlček	91.041.015	1	/7.6
-RCF12	Filtr RFC vývodový Efferent RFC filter Ableitenden RFC Filter	FBOPR1624	Ing. Miroslav Vlček	91.041.015	1	/7.7
-FA1	Pomocné kontakty - 1xNO+1xNC Auxiliary contacts - 1xNO+1xNC Hilfskontakte - 1xNO + 1xNC	HK1-11	ABB	91.046.005	1	/7.4
-FA2	Pomocné kontakty - 1xNO+1xNC Auxiliary contacts - 1xNO+1xNC Hilfskontakte - 1xNO + 1xNC	HK1-11	ABB	91.046.005	1	/8.2
-FA3	Pomocné kontakty - 1xNO+1xNC Auxiliary contacts - 1xNO+1xNC Hilfskontakte - 1xNO+1xNC	HKF1-11	ABB	91.046.002	1	/8.6
-FU1	Svorka pojistková Fuse terminal Sicherungsklemme	WK4/THSi5U	WIELAND	91.251.102	1	/10.4
-FU2	Svorka pojistková Fuse terminal Sicherungsklemme	WK4/THSi5U	WIELAND	91.251.102	1	/10.4
-FU2	Pojistka trubičková - 800mA/250V, pomalá, 5x20 Tube fuse - 800A/250V, slow, 5x20 Rohrsicherung - 800A / 250V, langsam, 5x20	T800mA/250V	ESKA	91.230.010	1	/10.4
-FU3	Svorka pojistková Fuse terminal Sicherungsklemme	WK4/THSi5U	WIELAND	91.251.102	1	/10.4
-FU3	Pojistka trubičková - 1A/250V, pomalá, 5x20 Tube fuse - 1A/250V, slow, 5x20 Rohrsicherung - 1A / 250V, langsam, 5x20	T1A/250V	ESKA	91.230.031	1	/10.4
-FU4	Svorka pojistková Fuse terminal Sicherungsklemme	WK4/THSi5U	WIELAND	91.251.102	1	/10.4

The manufacturer reserves right to use an equivalent replacement device.

3

Kusovník artiklů / Parts list / Stückliste

Označení přístroje Device identification Geräteidentifikation	Typ přístroje Device description Gerätebeschreibung	Objednací číslo Type number Typennummer	Výrobce Manufacturer Hersteller	Skladové číslo Part number Lagernummer	Množství Quantity Menge	Umístění Location Stelle
-HL1	Signálka zelená na adaptér Green light for Eaton adapter Grünes Licht für Eaton-Adapter	M22-LED-G	EATON	91.061.023	1	/13.8
-KM1	Ministýkač 4kW/400V Minicontactor 4kW/400V Mini Schütz 4kW/400V	B6S-30-01-1.7-71	ABB	91.040.049	1	/11.1
-KM2	Ministýkač 4kW/400V Minicontactor 4kW/400V Mini Schütz 4kW/400V	B6S-30-01-1.7-71	ABB	91.040.049	1	/11.3
-KM3	Ministýkač 4kW/400V Minicontactor 4kW/400V Mini Schütz 4kW/400V	B6S-30-01-1.7-71	ABB	91.040.049	1	/11.4
-KM11	Stýkač 7,5kW/400V Contactor 7,5kW/400V Schütz 7,5kW/400V	AF16-30-10-11	ABB	91.040.056	1	/16.7
-KM11	Pomocný kontakt - 1xNC Auxiliary contact - 1xNC Hilfskontakt - 1 xNC	CA4-01	ABB	91.041.043	1	/16.7
-KM12	Stýkač 7,5kW/400V Contactor 7,5kW/400V Schütz 7,5kW/400V	AF16-30-10-11	ABB	91.040.056	1	/16.8
-KM12	Pomocný kontakt - 1xNC Auxiliary contact - 1xNC Hilfskontakt - 1 xNC	CA4-01	ABB	91.041.043	1	/16.8
-PA1	Pojistkový odpínač pro válcové vložky - 3P Switch fuse for the cylinder inserts - 3P Schalter Sicherung für den Zylindereinsätze - 3P	E 93/32	ABB	91.241.014	1	/9.2
-PA2	Pojistkový odpojovač E-90 - 2P Fuse disconnector E-90 - 2P Sicherungstrenner E90 - 2P	E 92/32	ABB	91.241.013	1	/10.1
-QS1	Rukojeť odpínače - černá Handle switch - black Griffschalter - schwarz	OHBS2RJ	ABB	91.180.015	1	/7.0
-QS1	Kryt svorek Terminal shroud Klemmenabdeckung	OTS40T3	ABB	91.170.017	1	/7.0

The manufacturer reserves right to use an equivalent replacement device.

3.a

Kusovník artiklů / Parts list / Stückliste

Označení přístroje Device identification Geräteidentifikation	Typ přístroje Device description Gerätebeschreibung	Objednací číslo Type number Typennummer	Výrobce Manufacturer Hersteller	Skladové číslo Part number Lagernummer	Množství Quantity Menge	Umístění Location Stelle
-RE1	Patice pro relé Relay socket Relaissockel	CR-PSS	ABB	91.051.048	1	/12.6
-RE1	Paticové relé CR-P Plug-in relay CR-P Stecken Sie in Relais CR-P	CR-P024DC2	ABB	91.051.049	1	/12.6
-RP1	Svorka rychloupínací Fastconnect clamp Fast Connect Klemm	WAGO 224-112	WAGO	91.250.009	3	/9.6
-SB1	Hlavice prosvětleného tlačítka zelená Green transparent switch Grün transparent Schalter	M22-DL-G	EATON	91.060.031	1	/15.0
-SB1	Upevňovací adaptér + 1NO Attaching adapter + 1NO Montageadapter + 1NO	M22-AK10	EATON	91.061.021	1	/15.0
-SB2	Upevňovací adaptér + 1NO Attaching adapter + 1NO Montageadapter + 1NO	M22-AK10	EATON	91.061.021	1	/15.1
-SB2	Hlavice tlačítka - černá Head button - black Kopftaste - schwarz	M22-D-S	EATON	91.060.035	1	/15.1
-SB3	Hlavice 3 polohového přepínače Head of 3 position switch Leiter der 3-Positionsschalter	M22-WRK3	EATON	91.060.051	1	/15.2
-SB3	Kontaktní blok - 1NO Contact block - 1NO Kontaktblock - 1NO	M22-K10	EATON	91.061.022	1	/15.2
-SB3	Upevňovací adaptér + 1NO Attaching adapter + 1NO Montageadapter + 1NO	M22-AK10	EATON	91.061.021	1	/15.2
-SB500	Total stop - hlavice + 3xNC Emergency-stop mushroom push - button + 3xNC Not-Aus-Pilz - Taster + 3 xNC	YW1B-V4E02R	IDEC	91.060.084	1	/16.4
-SB500	Kontakt - 1x NO Contact - 1x NO Kontakt - 1x NO	YW-E10	IDEC	91.061.044	1	/16.4

The manufacturer reserves right to use an equivalent replacement device.

3.b

Kusovník artiklů / Parts list / Stückliste

Označení přístroje Device identification Geräteidentifikation	Typ přístroje Device description Gerätebeschreibung	Objednací číslo Type number Typennummer	Výrobce Manufacturer Hersteller	Skladové číslo Part number Lagernummer	Množství Quantity Menge	Umístění Location Stelle
-TR1	Toroidal transformer - 0-230-400V/20V/15V, 150VA Toroidal transformer - 0-230-400V/20V/15V, 150VA Ringkerntransformator - 0-230V-400V/20V/15V, 150VA	400V/230V/20V/15V 6A/2A 150VA	KARBAN s.r.o.	91.080.026	1	/10.1
-SQ21	Bezpečnostní koncový spínač - 2xNC Safety Limit Switch - 2x NC Sicherheitsendschalter - 2x NC	QKS8	KEDU	91.173.012	1	/16.4
-SQ22	Bezpečnostní koncový spínač - 2xNC Safety Limit Switch - 2x NC Sicherheitsendschalter - 2x NC	QKS8	KEDU	91.173.012	1	/16.2
-PA1	Pojistka válcová - 20A, 10x38, rychlá Tube fuse - 20A, 10x38, fast Rohrsicherung - 20A, 10x38, schnell	PV10 20A gG	OEZ	91.230.038	1	/9.2
-PA2	Pojistka válcová - 2A, 10x38, pomalá Tube fuse - 2A, 10x38, slow Rohrsicherung - 2A, 10x38, langsam	PV10 2A gG	OEZ	91.230.034	2	/10.1
-SQ1	Koncový spínač - 1NC+1NO Limit switch - 1NC+1NO Endschalter - 1NC+1NO	D4N-4A31	OMRON	91.173.007	1	/14.3
-SQ2	Koncový spínač - 1NC+1NO, M20 Limit switch - 1NC+1NO, M20 Endschalter - 1NC+1NO, M20	D4N-4A62	OMRON	91.173.008	1	/14.5
-SQ3	Koncový spínač - 1NC+1NO, M20, pomalý Limit switch - 1NC+1NO, M20, slow Endschalter -1NC+1NO, M20, langsam	D4N-4A32	OMRON	91.173.010	1	/14.6
-SQ4	Koncový spínač - 1NO + 1NC Limit switch - 1NO + 1NC Endschalter - 1NO + 1NC	FR 555-M2	PIZZATO	91.173.018	1	/14.7
-FM1	Frekvenční měnič - 7.5kW, 3x400VAC Frequency converter - 7.5kW, 3x400VAC Frequenzumrichter - 7,5 kW, 3x400VAC	VFD075E43A	DELTA ELECTRONICS, INC.	91.012.092	1	/9.2
-QS1	3 pólový odpínač, 63A Disconnector - 3P, 63A Trennschalter - 3P, 63A	SAP63/03-M2	SALZER YUEQING LEYI	91.170.031	1	/7.0
-SB7	Hlavice prosvětleného tlačítka žlutá The button head backlit yellow Der Knopf Kopf von hinten beleuchtet gelb	ZB5AW35	TELEMECANIQUE	91.060.023	1	/16.6

The manufacturer reserves right to use an equivalent replacement device.

3.c

Kusovník artiklů / Parts list / Stückliste

Označení přístroje Device identification Geräteidentifikation	Typ přístroje Device description Gerätebeschreibung	Objednací číslo Type number Typennummer	Výrobce Manufacturer Hersteller	Skladové číslo Part number Lagernummer	Množství Quantity Menge	Umístění Location Stelle
-CU1	Řídící obvod Control circuit Die Steuerschaltung	PRO-5.X	Bomar	91.995.221	1	/18.0
-RCF0	Odrušovací filtr 32A Noise filter 32A Rauschfilter 32A	32EB15/50/C2	WIDECOM TECHNOLOGY s.r.o.	91.041.066	1	/7.1
-M5	Ventilátor 24VDC, 154CFM Fan 24VDC, 154CFM Fan 24VDC, 154CFM	RDH1238 B2	Xinruilian Electronic Co.	91.015.126	1	/11.7

The manufacturer reserves right to use an equivalent replacement device.

3.d

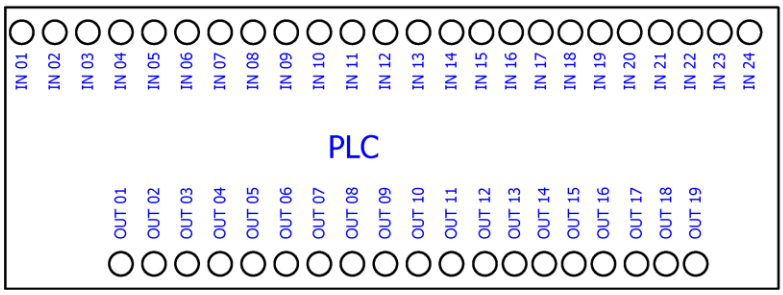

HW	
FW	

Pohled ze spodu/From under view/Blick nach

I/O	CZE	ENG	DE
IN 01	Svěrák upnut	Vice is clamped	Schraubstock ist gespannt
IN 02	Rameno dole	Arm is down	Rahmen ist unten
IN 03	Rameno nahoře	Arm is up	Rahmen ist oben
IN 04	Napnutí pásu	Blade tension	Bandspannung
IN 05	Motory OK	Motors OK	Motoren OK
IN 06	Bezpečnostní okruh uzavřen	Safety circle shut down	Sicherheitsschaltung gesperrt
IN 07	Tlačítko TOTAL STOP	Button TOTAL STOP	Taste TOTAL STOP
IN 08	Tlačítko START	Button START	Taste START
IN 09	Tlačítko STOP	Button STOP	Taste STOP
IN 10	MANUAL	MANUAL	MANUAL
IN 11	CYKLUS	CYCLE	ZYKLUS
IN 12	Kolize kostky	Cube collision	Klotzkollision
IN 13	NC	NC	NC
IN 14	NC	NC	NC
IN 15	NC	NC	NC
IN 16	NC	NC	NC
IN 17	NC	NC	NC
IN 18	NC	NC	NC
IN 19	Tlačítko napnout pás	Button band tension	Taste band spannen
IN 20	Tlačítko povolit pás	Button band release	Taste band lösen
IN 21	Tlačítko rameno nahoru	Button arm up	Taste Rahmen nach oben
IN 22	NC	NC	NC
IN 23	Přítlak upnut	Upper vice is clamped	Ober Schraubstock ist gespannt
IN 24	NC	NC	NC
OUT 01+ OUT 01-	Start FM1	Start FM1	Start FM1
OUT 02+ OUT 02-	NC	NC	NC
OUT 03+ OUT 03-	NC	NC	NC
OUT 04	Motor chlazení	Coolant pump	Motor Kühlung
OUT 05	Čerpadlo hydrauliky	Hydraulic pump	Hydraulikpumpe
OUT 06	2.stupeň hydrauliky	Second level of hydraulic pump	Hydraulikpumpe 2.Stufe
OUT 07	Svěrák upnout	Vice clamp	Schraubstock spannen
OUT 08	Svěrák povolit	Release vice	Schraubstock lösen
OUT 09	NC	NC	NC
OUT 10	NC	NC	NC
OUT 11	Rameno nahoru	Arm up	Rahmen nach oben
OUT 12	Rameno dolů	Arm down	Rahmen nach unten
OUT 13	Rameno rychle	Arm fast	Rahmen schnell
OUT 14	Přítlak upnout	Upper vice clamp	Ober Schraubstock spannen
OUT 15	Přítlak povolit	Release upper vice	Ober Schraubstock lösen
OUT 16	Napnout pás	Sawblade tension	Spannen des Sägebandes
OUT 17	Uvolnit pás	Sawblade leave	Entspannen des Sägebandes
OUT 18	Mikronizer	Microniser	Mikronizer
OUT 19	Kontrolka start	Indicator start	Kontrollicht start

BOMAR, s.r.o.
Těžební 1236/1
CZ 627 00, Brno

Stroj/Machine/Maschine:
Extend 1000.820

Název stránky/Name page/Name seiten:
I/O řídící systém / I/O Control station / I/O Steuerung

Číslo dok./Doc.No/Anzahl der Dokumente: ES-63200-201/202-V6.6
Napájení/Power supply/Einspeisung: 3x400V+PE, 50Hz
Zpracoval/Processed / hat verarbeitet:
Datum/Date/Datum: 13.10.2016

List/Page/Seite: 4
List(ů)/Pages/Seiten: 26

3.e

Schémata
Schemas
Schematics

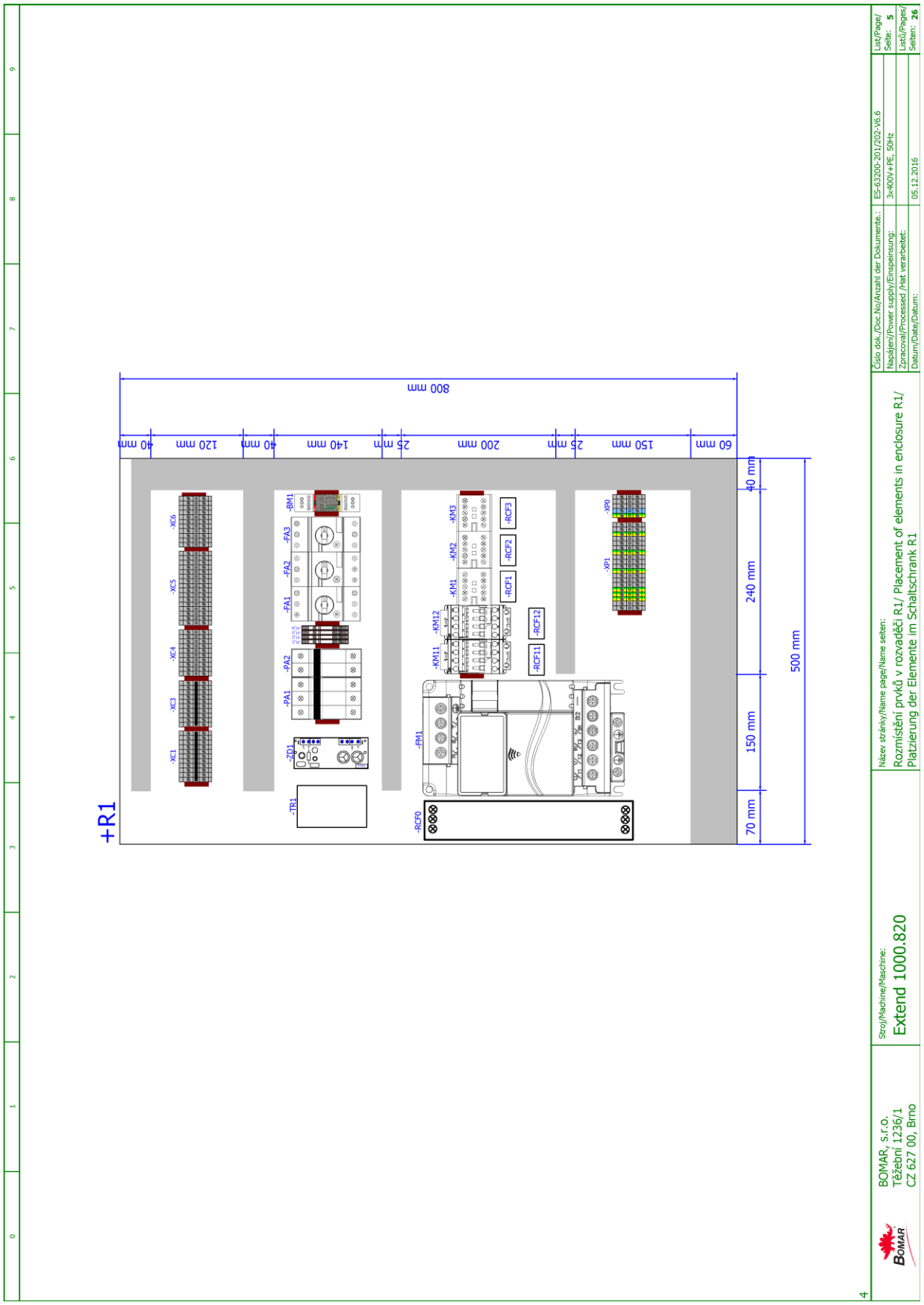
+R1
800 mm
40 mm
120 mm
40 mm
140 mm
25 mm
200 mm
25 mm
150 mm
60 mm
-XC1
-XC3
-XC4
-XC5
-XC6
-TR1
-ZD1
-PA1
-PA2
-FA1
-FA2
-FA3
-BM1
-FM1
-RCF0
-KM11
-KM12
-KM1
-KM2
-KM3
-RCF1
-RCF2
-RCF3
-RCF11
-RCF12
-XP1
-XP0
70 mm
150 mm
240 mm
40 mm
500 mm
Číslo dok./Doc.No/Anzahl der Dokumente.:
ES-63200-201/202-V6.6
Napájení//Power supply/Einspeisung:
3x400V+PE, 50Hz
Zpracoval/Processed /Hat verarbeitet:
Datum/Date/Datum:
05.12.2016
List/Page/
Seite: 5
Listů/Pages/
Seiten: 26
Název stránky/Name page/Name seiten:
Rozmístění prvků v rozvaděči R1/ Placement of elements in enclosure R1/
Platzierung der Elemente im Schaltschrank R1
Stroj/Machine/Maschine:
Extend 1000.820
BOMAR, s.r.o.
Těžební 1236/1
CZ 627 00, Brno
BOMAR

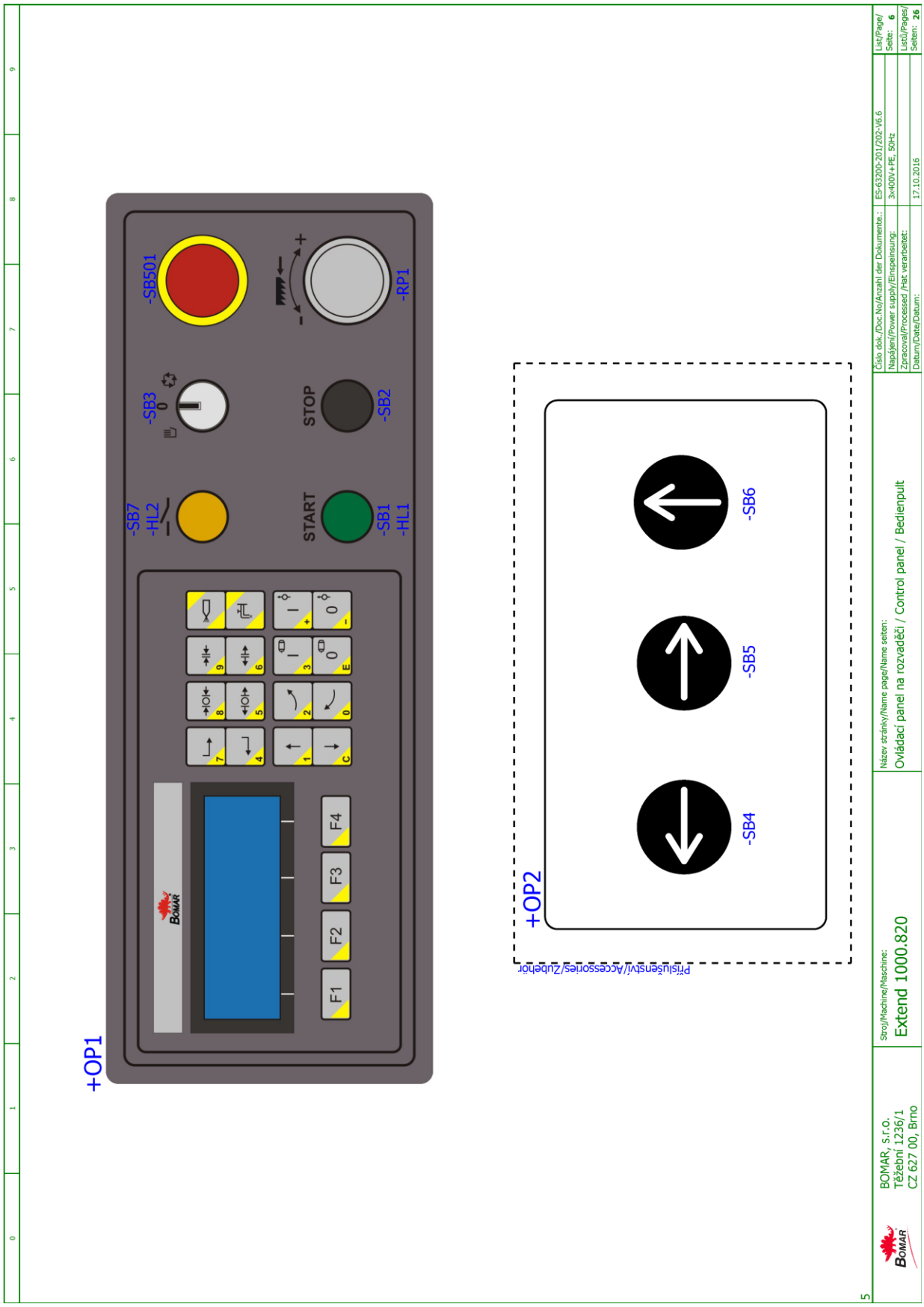
+OP1
-SB7
-HL2
-SB3
-SB501
START
-SB1
-HL1
STOP
-SB2
-RP1
F1
F2
F3
F4
+OP2
-SB4
-SB5
-SB6
Příslušenství/Accessories/Zubehör
Číslo dok./Doc.No/Anzahl der Dokumente:
ES-63200-201/202-V6.6
Napájení/Power supply/Einspeisung:
3x400V+PE, 50Hz
Zpracoval/Processed /Hat verarbeitet:
Datum/Date/Datum:
17.10.2016
List/Page/
Seite:
6
Listů/Pages/
Seiten:
26
Název stránky/Name page/Name seiten:
Ovládací panel na rozvaděči / Control panel / Bedienpult
Stroj/Machine/Maschine:
Extend 1000.820
BOMAR, s.r.o.
Těžební 1236/1
CZ 627 00, Brno
5

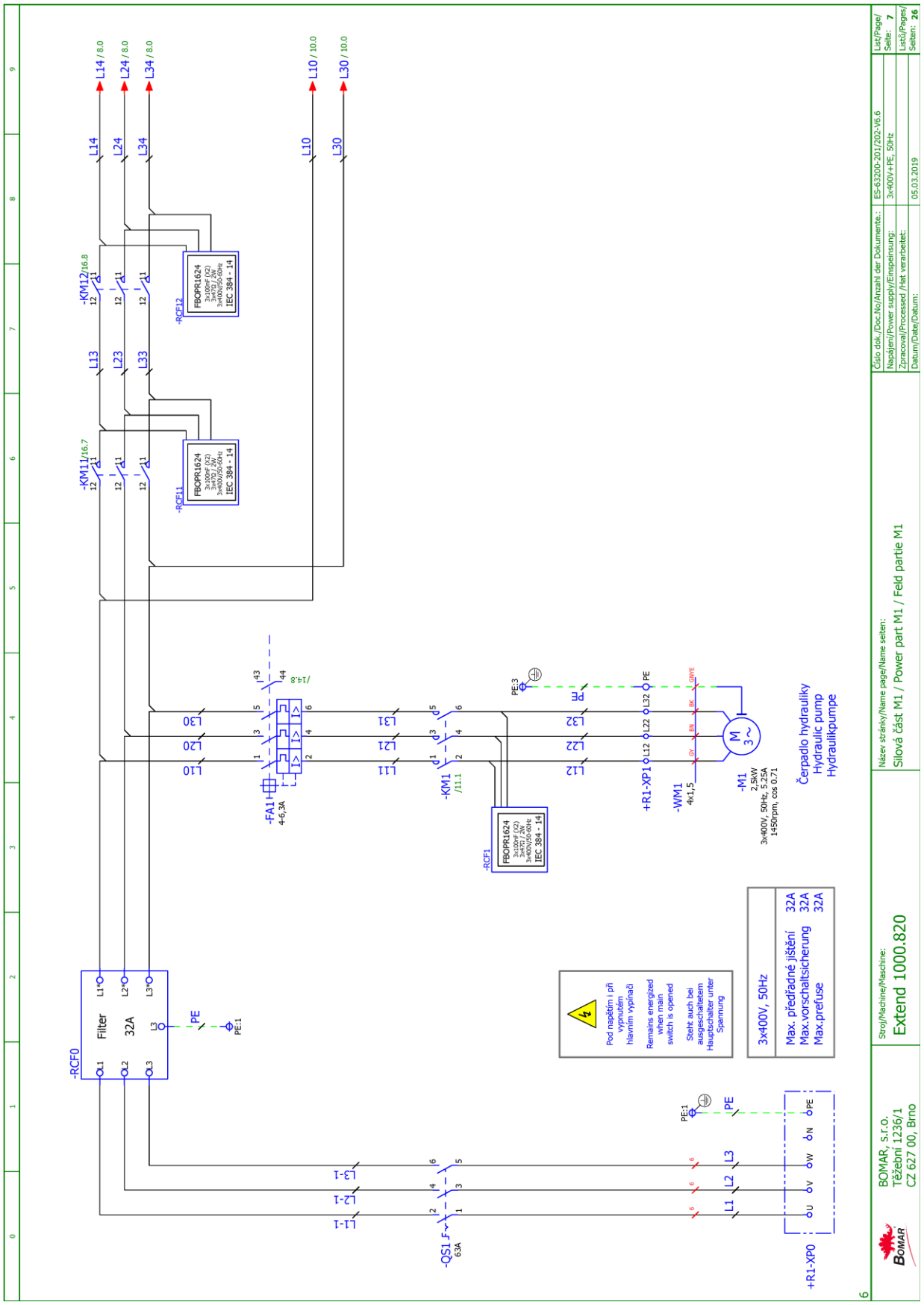
-RCF0
Filter
32A
L1*
L2*
L3*
PE
PE:1
-QS1
63A
L1-1
L2-1
L3-1
+R1-XP0
L1
L2
L3
PE
-FA1
4-6,3A
/14.8
-KM11/16.7
-KM12/16.8
-RCF11
-RCF12
-RCF1
FBOPR1624
IEC 384 - 14
L14 / 8.0
L24 / 8.0
L34 / 8.0
L10 / 10.0
L30 / 10.0
L13
L23
L33
L10
L20
L30
L11
L21
L31
L12
L22
L32
-KM1
/11.1
PE:3
+R1-XP1
-WM1
4x1,5
-M1
2,5kW
3x400V, 50Hz, 5.25A
1450rpm, cos 0.71
Čerpadlo hydrauliky
Hydraulic pump
Hydraulikpumpe
Pod napětím i při vypnutém hlavním vypínači
Remains energized when main switch is opened
Steht auch bei ausgeschaltetem Hauptschalter unter Spannung
3x400V, 50Hz
Max. předřadné jištění 32A
Max.vorschaltsicherung 32A
Max.prefuse
BOMAR, s.r.o.
Těžební 1236/1
CZ 627 00, Brno
Stroj/Machine/Maschine:
Extend 1000.820
Název stránky/Name page/Name seiten:
Silová část M1 / Power part M1 / Feld partie M1
Číslo dok./Doc.No/Anzahl der Dokumente.:
ES-63200-201/202-V6.6
Napájení//Power supply/Einspeisung:
3x400V+PE, 50Hz
Zpracoval/Processed /Hat verarbeitet:
Datum/Date/Datum:
05.03.2019
List/Page/Seite: 7
Listů/Pages/Seiten: 26

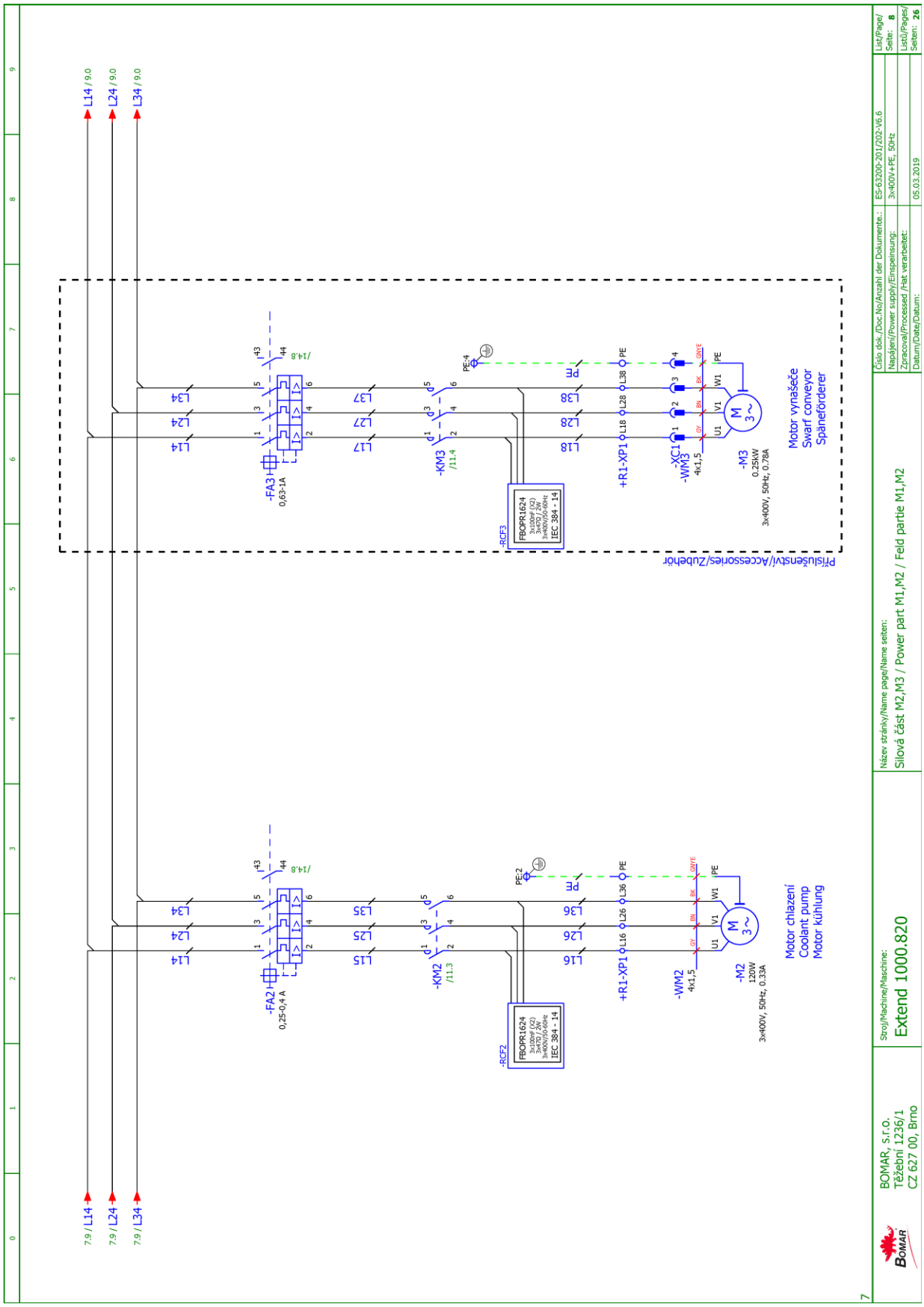
L14 / 9.0
L24 / 9.0
L34 / 9.0
7.9 / L14
7.9 / L24
7.9 / L34
-FA3
0,63-1A
-FA2
0,25-0,4 A
-KM3
/11.4
-KM2
/11.3
-RCF3
-RCF2
FBQPR1624
3x100nF (X2)
3x470 / 2W
3x400V/50/60Hz
IEC 384 - 14
+R1-XP1
-XC1
-WM3
4x1,5
-WM2
4x1,5
-M3
0,25kW
3x400V, 50Hz, 0,78A
-M2
120W
3x400V, 50Hz, 0,33A
Motor vynašeče
Swarf conveyor
Späneförderer
Motor chlazení
Coolant pump
Motor kühlung
Příslušenství/Accessories/Zubehör
BOMAR, s.r.o.
Těžební 1236/1
CZ 627 00, Brno
Stroj/Machine/Maschine:
Extend 1000.820
Název stránky/Name page/Name seiten:
Silová část M2,M3 / Power part M1,M2 / Feld partie M1,M2
Číslo dok./Doc.No/Anzahl der Dokumente.:
ES-63200-201/202-V6.6
Napájení/Power supply/Einspeisung:
3x400V+PE, 50Hz
Zpracoval/Processed /Hat verarbeitet:
Datum/Date/Datum:
05.03.2019
List/Page/
Seite: 8
List(i)/Pages/
Seiten: 26

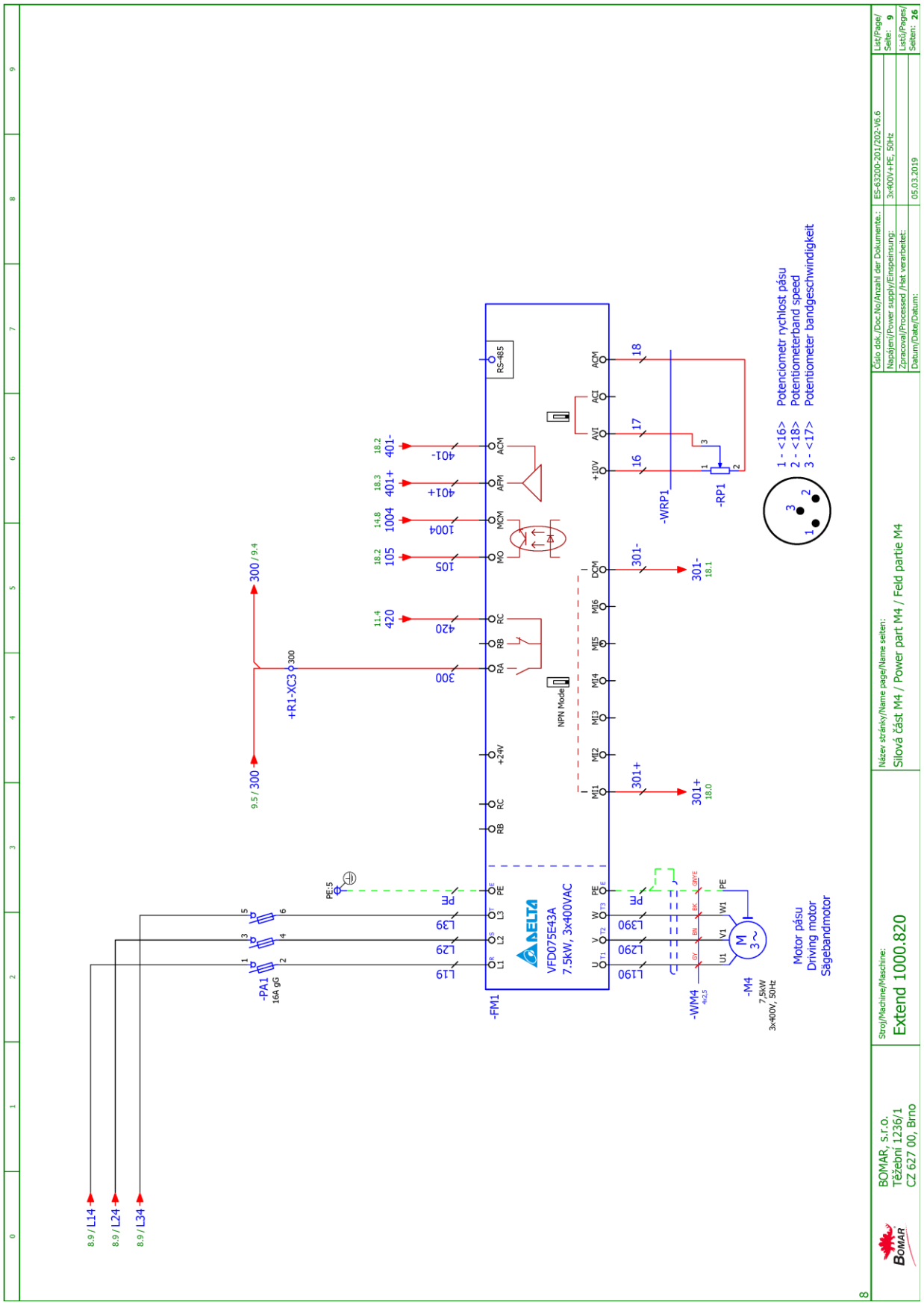
8.9 / L14
8.9 / L24
8.9 / L34
-PA1
16A gG
PE:5
9.5 / 300
300 / 9.4
+R1-XC3
300
-FM1
DELTA
VFD075E43A
7.5kW, 3x400VAC
NPN Mode
RS-485
11.4
420
18.2
105
14.8
1004
18.3
401+
18.2
401-
301+
18.0
301-
18.1
-WRP1
-RP1
1 - <16> Potenciometr rychlost pásu
2 - <18> Potentiometerband speed
3 - <17> Potentiometer bandgeschwindigkeit
-WM4
4x2,5
-M4
7,5kW
3x400V, 50Hz
Motor pásu
Driving motor
Sägebandmotor
BOMAR, s.r.o.
Těžební 1236/1
CZ 627 00, Brno
Stroj/Machine/Maschine:
Extend 1000.820
Název stránky/Name page/Name seiten:
Silová část M4 / Power part M4 / Feld partie M4
Číslo dok./Doc.No/Anzahl der Dokumente.:
ES-63200-201/202-V6.6
Napájení//Power supply/Einspeisung:
3x400V+PE, 50Hz
Zpracoval/Processed /Hat verarbeitet:
Datum/Date/Datum:
05.03.2019
List/Page/Seite: 9
Listů/Pages/Seiten: 26

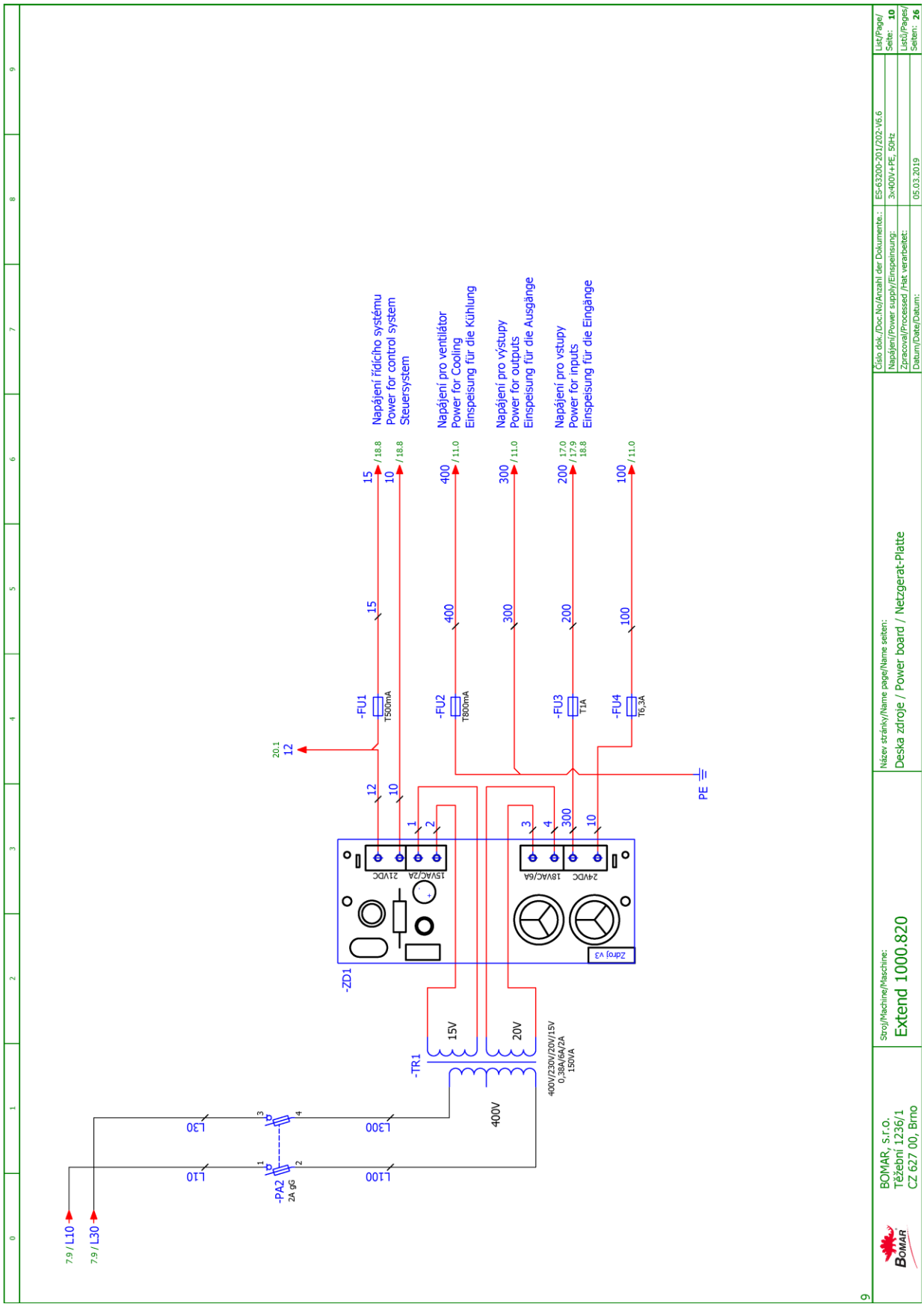
Napájení řídicího systému
Power for control system
Steuersystem
Napájení pro ventilátor
Power for Cooling
Einspeisung für die Kühlung
Napájení pro výstupy
Power for outputs
Einspeisung für die Ausgänge
Napájení pro vstupy
Power for inputs
Einspeisung für die Eingänge
-FU1 T500mA
-FU2 T800mA
-FU3 T1A
-FU4 T6,3A
-ZD1
Zdroj v3
15VAC/2A 21VDC
18VAC/6A 24VDC
-TR1
15V
20V
400V
400V/230V/20V/15V
0,38A/6A/2A
150VA
-PA2
2A gG
L10
L30
L100
L300
PE
7.9 / L10
7.9 / L30
Název stránky/Name page/Name seiten:
Deska zdroje / Power board / Netzgerat-Platte
Stroj/Machine/Maschine:
Extend 1000.820
BOMAR, s.r.o.
Těžební 1236/1
CZ 627 00, Brno
Číslo dok./Doc.No/Anzahl der Dokumente:
ES-63200-201/202-V6.6
Napájení/Power supply/Einspeisung:
3x400V+PE, 50Hz
Zpracoval/Processed /Hat verarbeitet:
Datum/Date/Datum:
05.03.2019
List/Page/
Seite: 10
Listů/Pages/
Seiten: 26

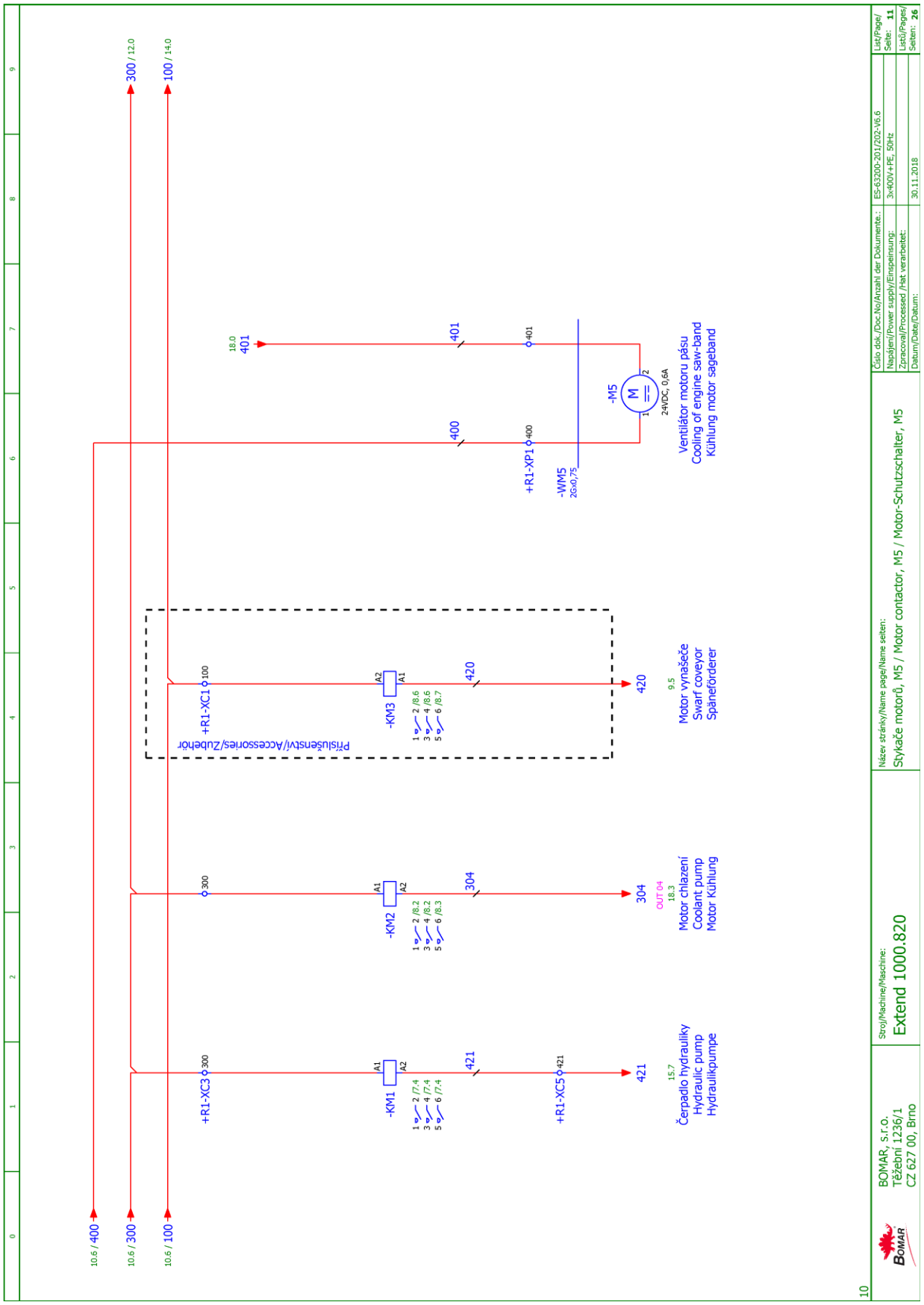
300 / 12.0
100 / 14.0
10.6 / 400
10.6 / 300
10.6 / 100
18.0
401
+R1-XC3
300
-KM1
A1
A2
1 2 /7.4
3 4 /7.4
5 6 /7.4
421
+R1-XC5
421
15.7
Čerpadlo hydraulicky
Hydraulic pump
Hydraulikpumpe
+R1-XC1
100
Příslušenství/Accessories/Zubehör
-KM3
A2
A1
1 2 /8.6
3 4 /8.6
5 6 /8.7
420
420
9.5
Motor vynašeče
Swarf coveyor
Späneförderer
-KM2
A1
A2
1 2 /8.2
3 4 /8.2
5 6 /8.3
304
304
OUT 04
18.3
Motor chlazení
Coolant pump
Motor Kühlung
401
400
+R1-XP1
400
401
-WM5
2G×0,75
-M5
M
1
2
24VDC, 0,6A
Ventilátor motoru pásu
Cooling of engine saw-band
Kühlung motor sageband
10
BOMAR, s.r.o.
Těžební 1236/1
CZ 627 00, Brno
Stroj/Machine/Maschine:
Extend 1000.820
Název stránky/Name page/Name seiten:
Stykače motorů, M5 / Motor contactor, M5 / Motor-Schutzschalter, M5
Číslo dok./Doc.No/Anzahl der Dokumente.:
ES-63200-201/202-V6.6
Napájení//Power supply/Einspeisung:
3x400V+PE, 50Hz
Zpracoval/Processed /Hat verarbeitet:
Datum/Date/Datum:
30.11.2018
List/Page/
Seite: 11
Listů/Pages/
Seiten: 26

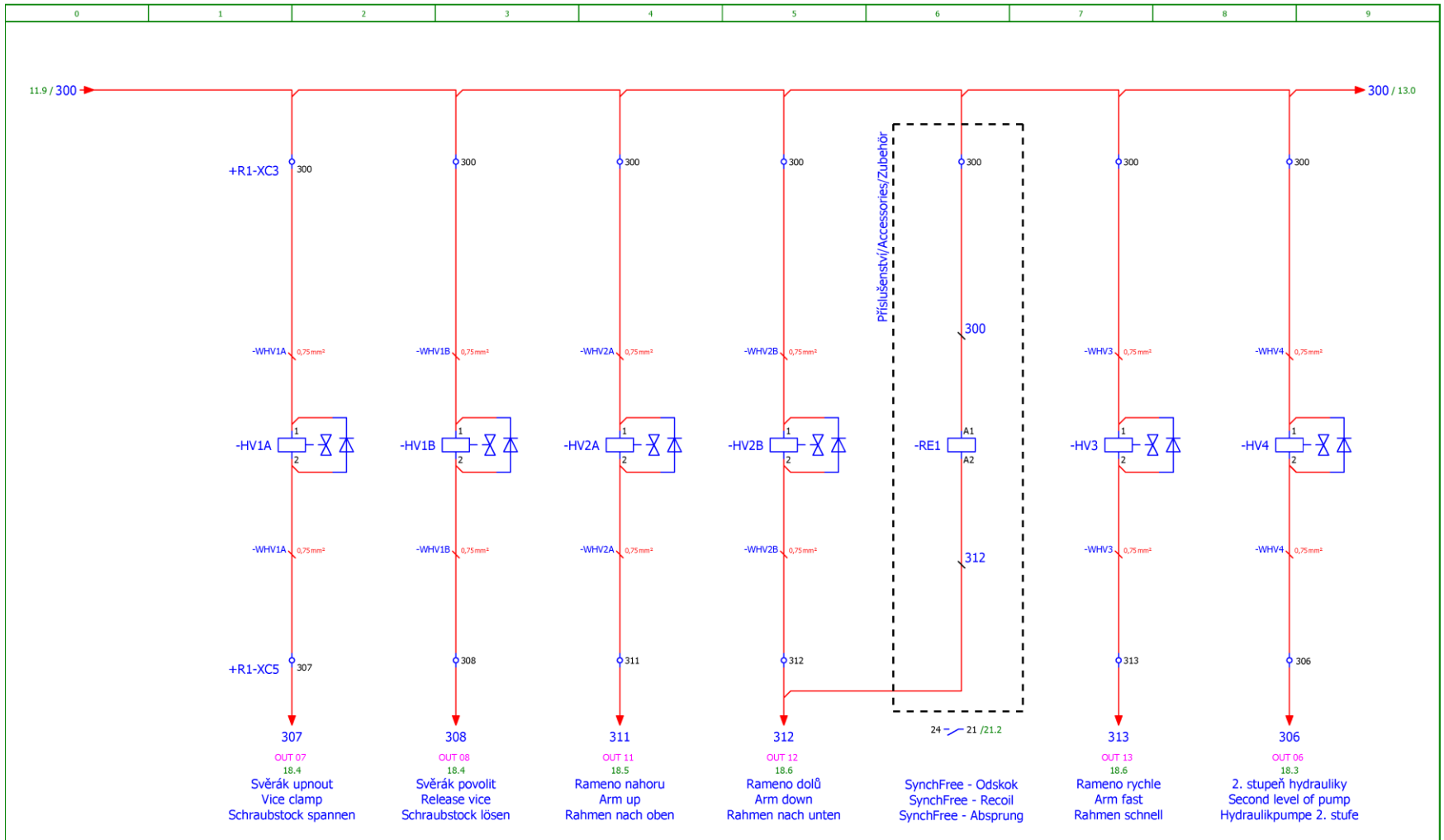

11

BOMAR, s.r.o. Těžební 1236/1 CZ 627 00, Brno	Stroj/Machine/Maschine: Extend 1000.820	Název stránky/Name page/Name seiten: Hydraulické ventily / Hydraulic valve / Hydroventil	Číslo dok./Doc.No/Anzahl der Dokumente.:	ES-63200-201/202-V6.6	List/Page/Seite: 12
			Napájení/Power supply/Einspeinsung:	3x400V+PE, 50Hz	Listů/Pages/Seiten: 26
			Zpracoval/Processed /Hat verarbeitet:		
			Datum/Date/Datum:	05.03.2019	

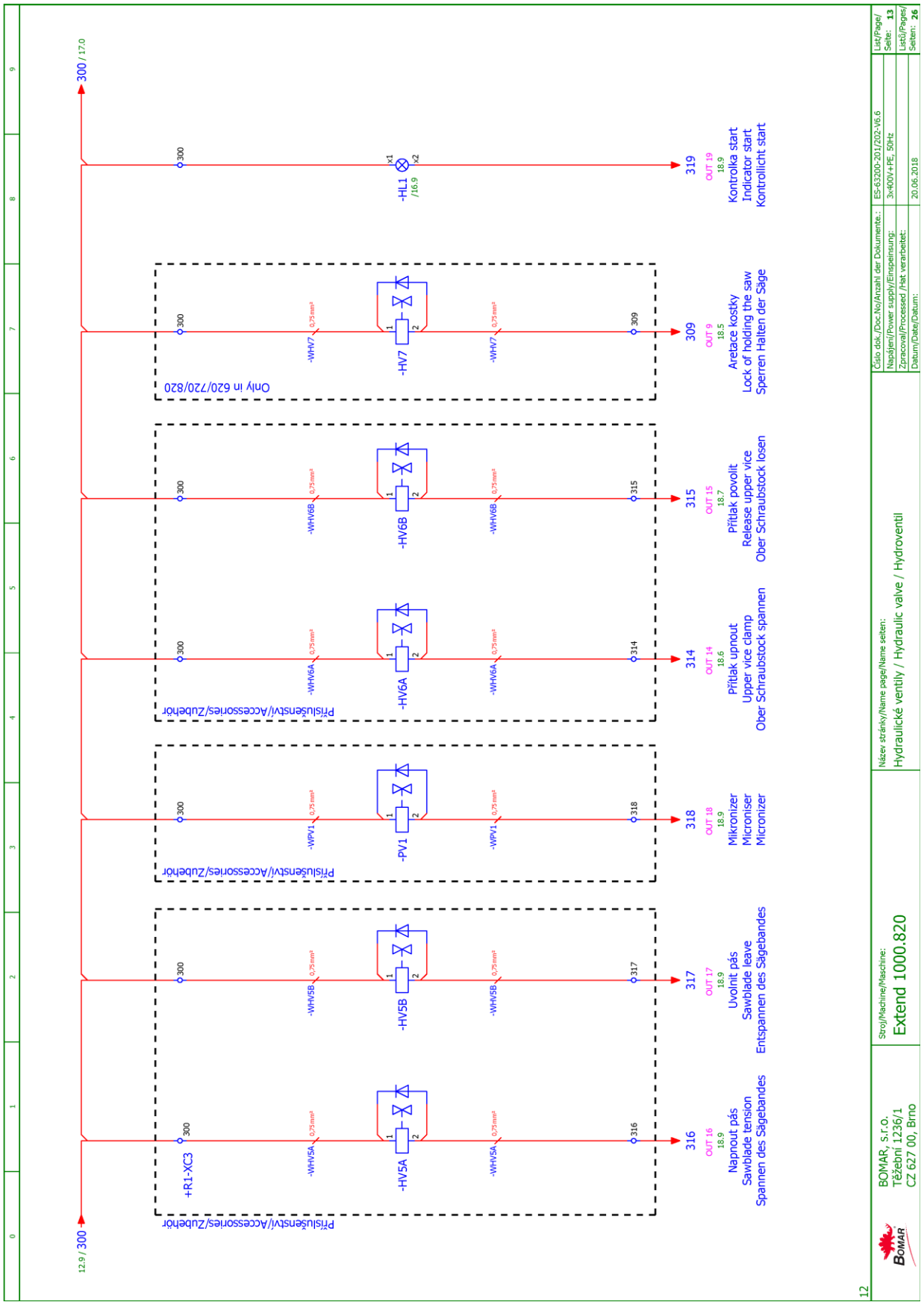
12.9 / 300
300 / 17.0
+R1-XC3
-WHV5A 0,75mm²
-HV5A
-WHV5A 0,75mm²
316
OUT 16
18.9
Napnout pás
Sawblade tension
Spannen des Sägebandes
-WHV5B 0,75mm²
-HV5B
-WHV5B 0,75mm²
317
OUT 17
18.9
Uvolnit pás
Sawblade leave
Entspannen des Sägebandes
Příslušenství/Accessories/Zubehör
-WPV1 0,75mm²
-PV1
-WPV1 0,75mm²
318
OUT 18
18.9
Mikronizer
Microniser
Micronizer
Příslušenství/Accessories/Zubehör
-WHV6A 0,75mm²
-HV6A
-WHV6A 0,75mm²
314
OUT 14
18.6
Přítlak upnout
Upper vice clamp
Ober Schraubstock spannen
-WHV6B 0,75mm²
-HV6B
-WHV6B 0,75mm²
315
OUT 15
18.7
Přítlak povolit
Release upper vice
Ober Schraubstock losen
Only in 620/720/820
-WHV7 0,75mm²
-HV7
-WHV7 0,75mm²
309
OUT 9
18.5
Aretace kostky
Lock of holding the saw
Sperren Halten der Säge
-HL1
/16.9
319
OUT 19
18.9
Kontrolka start
Indicator start
Kontrollicht start
BOMAR, s.r.o.
Těžební 1236/1
CZ 627 00, Brno
Stroj/Machine/Maschine:
Extend 1000.820
Název stránky/Name page/Name seiten:
Hydraulické ventily / Hydraulic valve / Hydroventil
Číslo dok./Doc.No/Anzahl der Dokumente.:
ES-63200-201/202-V6.6
Napájení/Power supply/Einspeisung:
3x400V+PE, 50Hz
Zpracoval/Processed /Hat verarbeitet:
Datum/Date/Datum:
20.06.2018
List/Page/
Seite: 13
Listů/Pages/
Seiten: 26
12

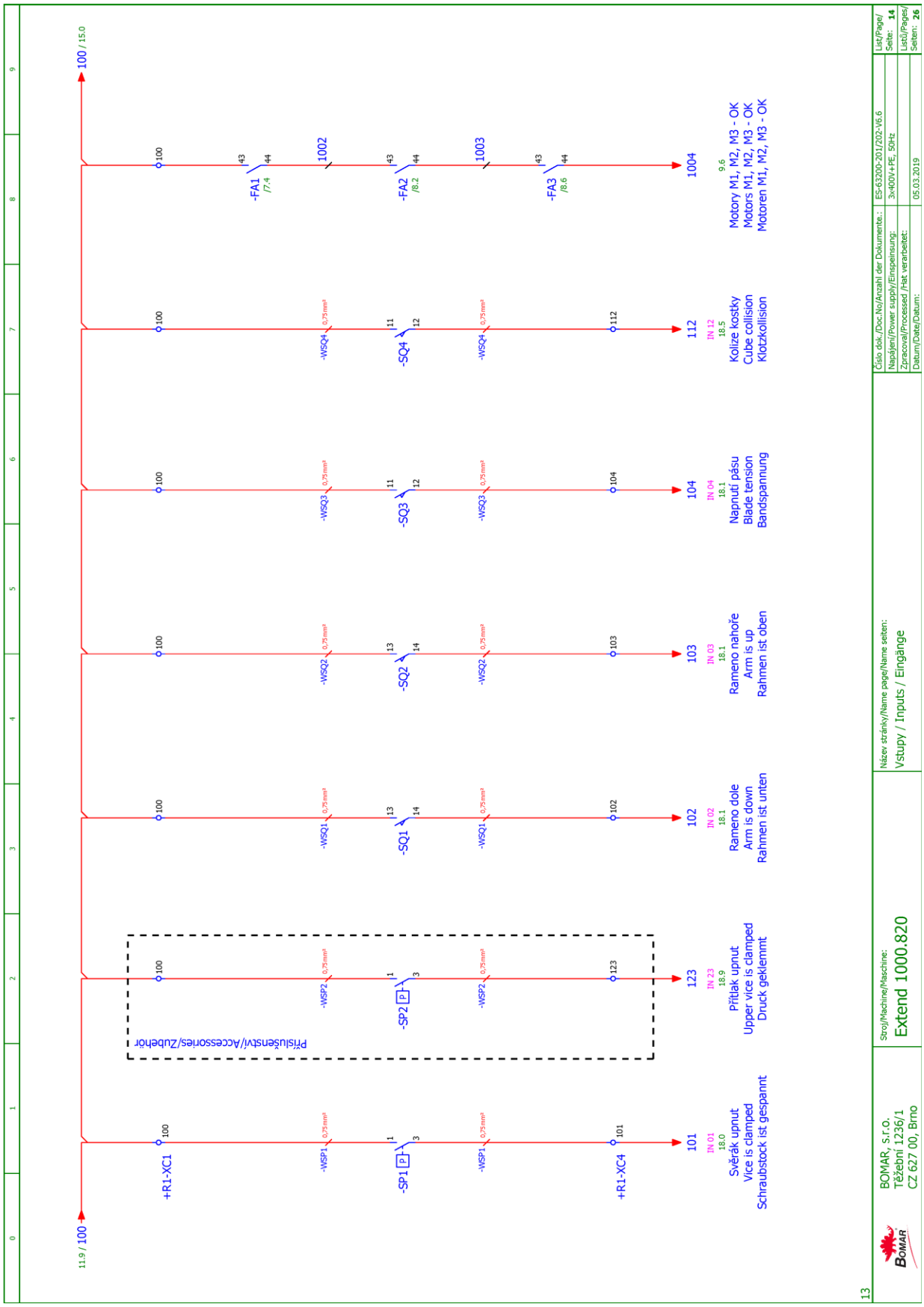

Schémata
Schemas
Schematics

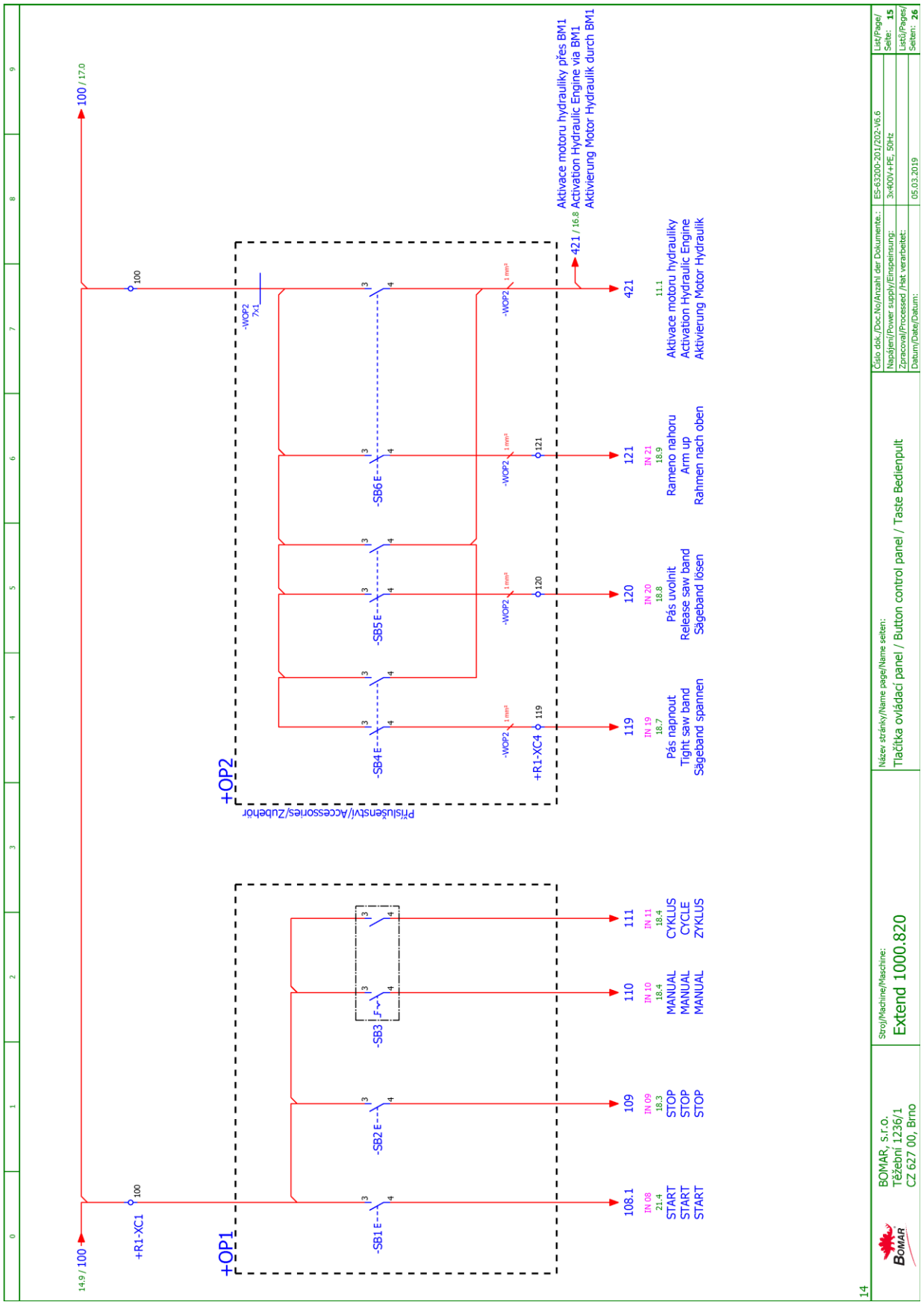
+OP1
+OP2
Příslušenství/Accessories/Zubehör
-SB1 E
-SB2 E
-SB3
-SB4 E
-SB5 E
-SB6 E
-WOP2
+R1-XC1
+R1-XC4
14.9 / 100
100 / 17.0
421 / 16.8
108.1
109
110
111
119
120
121
421
IN 08 21.4 START START START
IN 09 18.3 STOP STOP STOP
IN 10 18.4 MANUAL MANUAL MANUAL
IN 11 18.4 CYKLUS CYCLE ZYKLUS
IN 19 18.7 Pás napnout Tight saw band Sägeband spannen
IN 20 18.8 Pás uvolnit Release saw band Sägeband lösen
IN 21 18.9 Rameno nahoru Arm up Rahmen nach oben
111.1 Aktivace motoru hydrauliky Activation Hydraulic Engine Aktivierung Motor Hydraulik
Aktivace motoru hydrauliky přes BM1 Activation Hydraulic Engine via BM1 Aktivierung Motor Hydraulik durch BM1
BOMAR, s.r.o.
Těžební 1236/1
CZ 627 00, Brno
Stroj/Machine/Maschine:
Extend 1000.820
Název stránky/Name page/Name seiten:
Tlačítka ovládací panel / Button control panel / Taste Bedienpult
Číslo dok./Doc.No/Anzahl der Dokumente.:
ES-63200-201/202-V6.6
Napájení/Power supply/Einspeisung:
3x400V+PE, 50Hz
Zpracoval/Processed /Hat verarbeitet:
Datum/Date/Datum:
05.03.2019
List/Page/Seite: 15
Listů/Pages/Seiten: 26
14

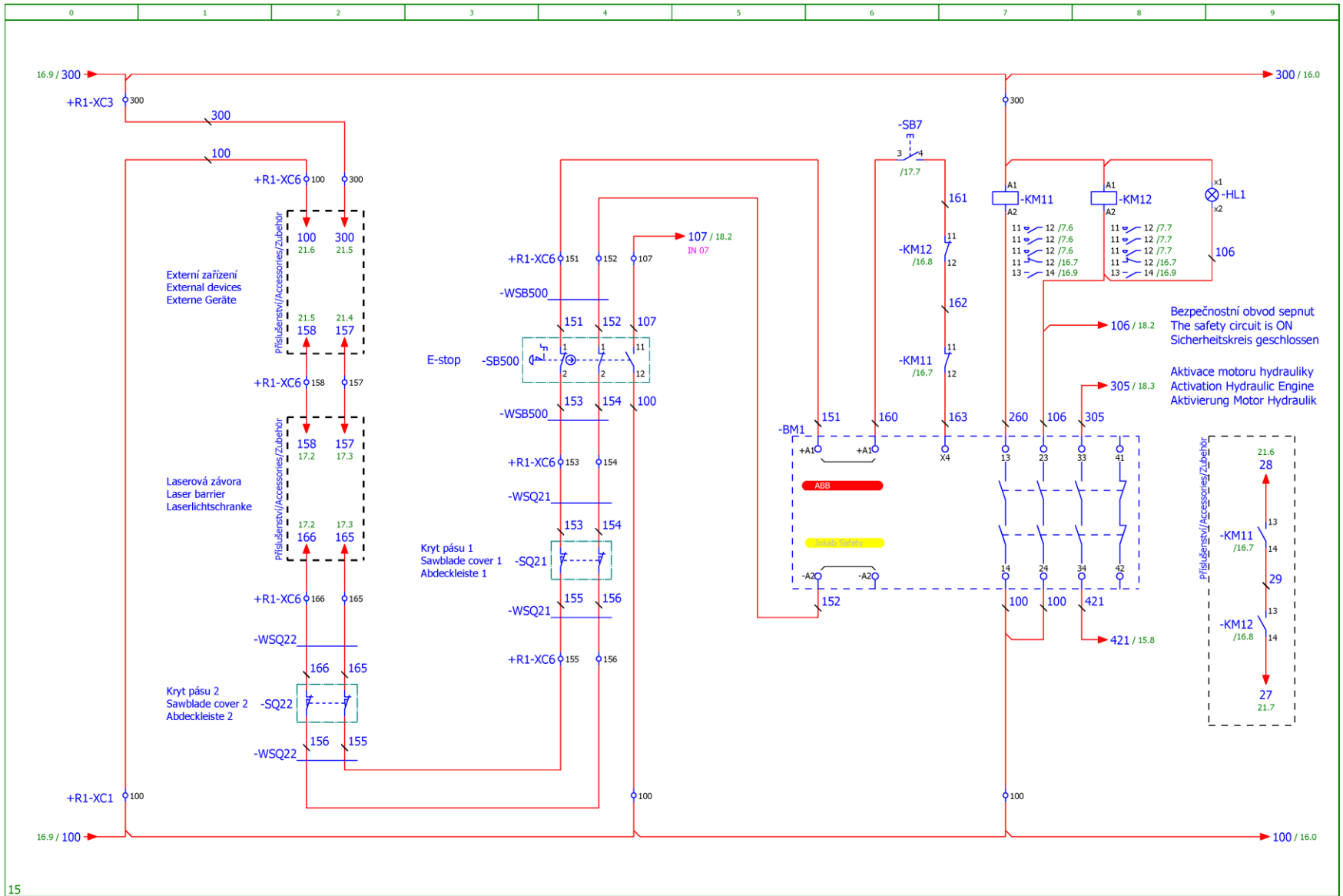

Schéma
Schemas
Schematics

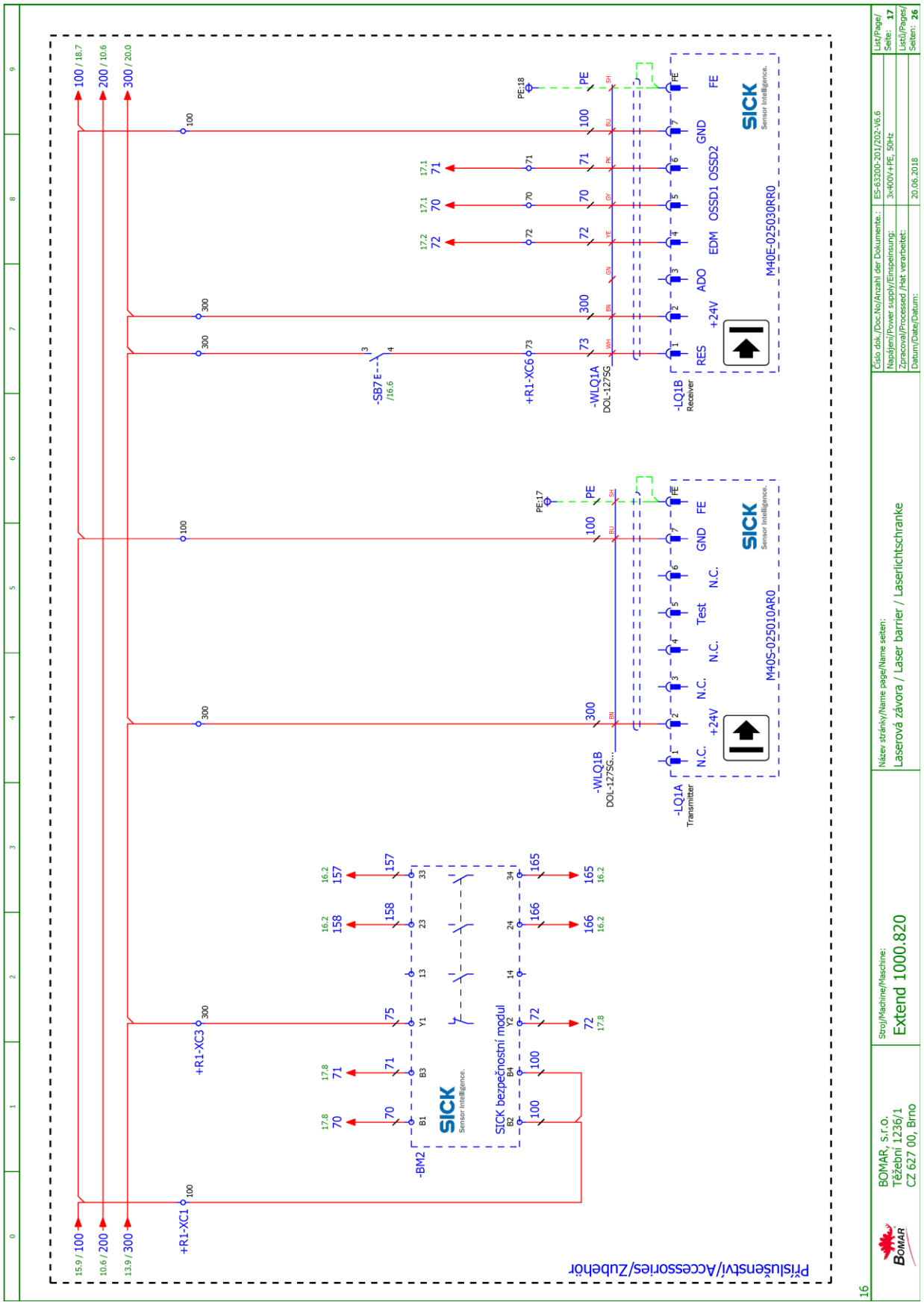
100 / 18.7
200 / 10.6
300 / 20.0
15.9 / 100
10.6 / 200
13.9 / 300
+R1-XC1
+R1-XC3
-BM2
SICK
Sensor Intelligence.
SICK bezpečnostní modul
-SB7 E
/16.6
+R1-XC6
-WLQ1A
DOL-127SG
-WLQ1B
DOL-127SG...
-LQ1B
Receiver
-LQ1A
Transmitter
M40E-025030RR0
M40S-025010AR0
RES
+24V
ADO
EDM
OSSD1
OSSD2
GND
FE
N.C.
Test
PE
PE:17
PE:18
Příslušenství/Accessories/Zubehör
Číslo dok./Doc.No/Anzahl der Dokumente.:
ES-63200-201/202-V6.6
List/Page/Seite: 17
Listů/Pages/Seiten: 26
Napájení/Power supply/Einspeisung:
3x400V+PE, 50Hz
Zpracoval/Processed /Hat verarbeitet:
Datum/Date/Datum:
20.06.2018
Název stránky/Name page/Name seiten:
Laserová závora / Laser barrier / Laserlichtschranke
Stroj/Machine/Maschine:
Extend 1000.820
BOMAR, s.r.o.
Těžební 1236/1
CZ 627 00, Brno
16

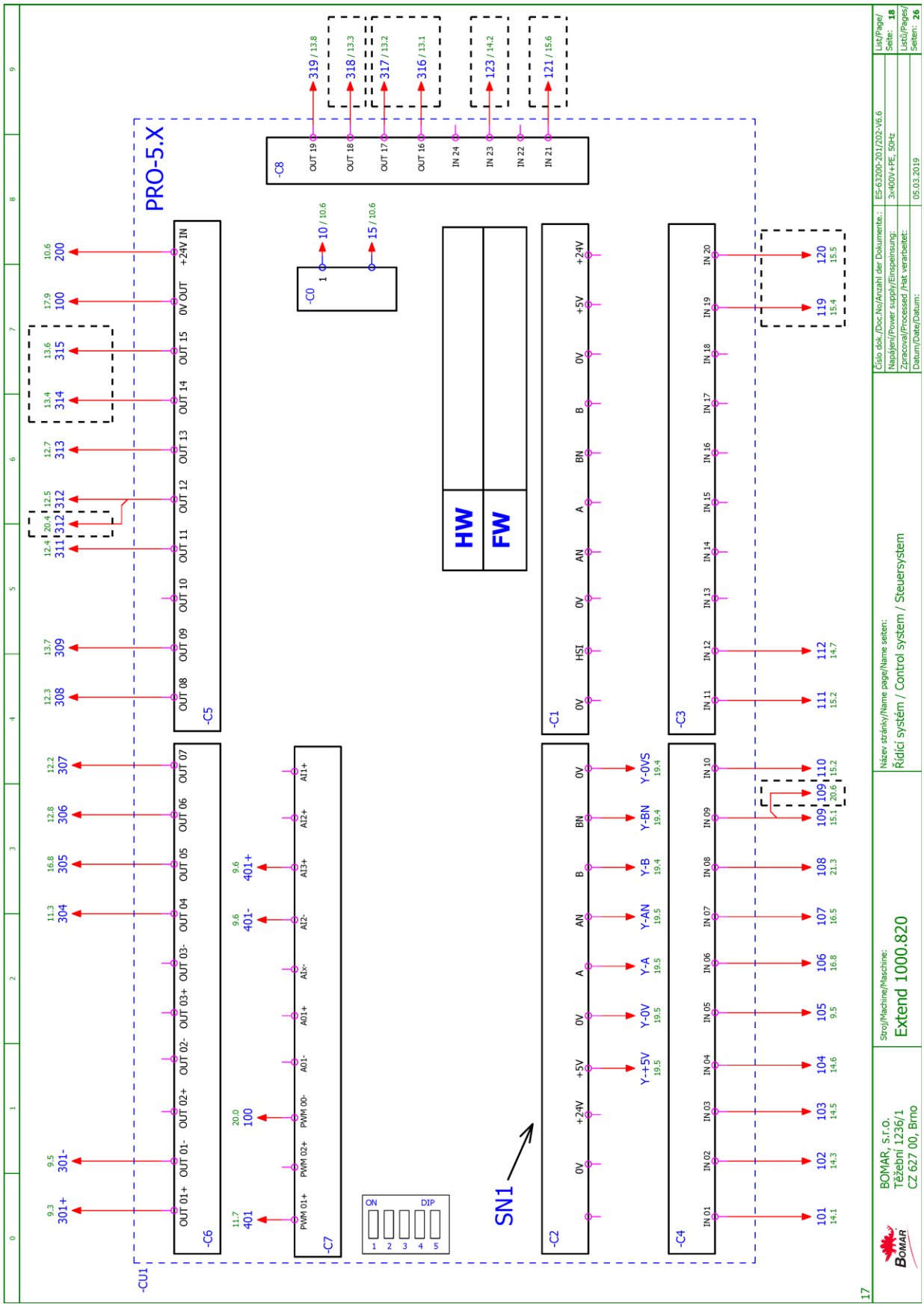
PRO-5.X
-CU1
-C0
-C1
-C2
-C3
-C4
-C5
-C6
-C7
-C8
HW
FW
SN1
ON
DIP
1 2 3 4 5
Číslo dok./Doc.No/Anzahl der Dokumente.:
ES-63200-201/202-V6.6
Napájení/Power supply/Einspeisung:
3x400V+PE, 50Hz
Zpracoval/Processed /Hat verarbeitet:
Datum/Date/Datum:
05.03.2019
List/Page/
Seite: 18
List/Pages/
Seiten: 26
Název stránky/Name page/Name seiten:
Řídící systém / Control system / Steuersystem
Stroj/Machine/Maschine:
Extend 1000.820
BOMAR, s.r.o.
Těžební 1236/1
CZ 627 00, Brno
17

Příslušenství/Accessories/Zubehör

SN1

Snímač výšky ramene Sawframe position sensor Rahmenposition sensor		Kabel HELU-Flexi 7x0.14
+	HNĚDÁ BROWN BRAUN	HNĚDÁ+MODRÁ BROWN+BLUE BRAU+BLAU
-	SEDÁ GREY GRAU	SEDÁ GREY GRAU
A	RUŽOVÁ PINK ROSAROT	ŽLUTÁ YELLOW GELB
AN	ZELENÁ GREEN GRÜN	RŮŽOVÁ PINK ROSA
B	ŽLUTÁ YELLOW GELB	BÍLÁ WHITE WEIS
BN	BÍLÁ WHITE WEIS	ZELENÁ GREEN GRÜN
	ČERNÁ BLACK SCHWARZ	STÍNĚNÍ SHIELD LEITUNGSSCHIRM

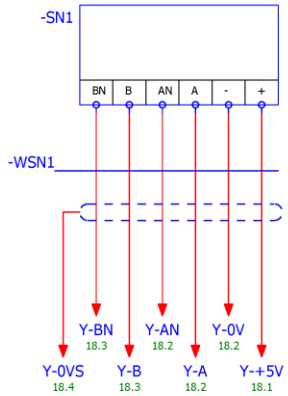

18

BOMAR, s.r.o. Těžební 1236/1 CZ 627 00, Brno	Stroj/Machine/Maschine: Extend 1000.820	Název stránky/Name page/Name seiten: Snímač výšky ramene / Arm height sensor / Arm Höhensensor	Číslo dok./Doc.No/Anzahl der Dokumente.: ES-63200-201/202-V6.6 Napájení/Power supply/Einspeisung: 3x400V+PE, 50Hz Zpracoval/Processed /Hat verarbeitet: Datum/Date/Datum: 13.10.2016	List/Page/Seite: 19 Listů/Pages/Seiten: 26

Schémata
Schemas
Schematics

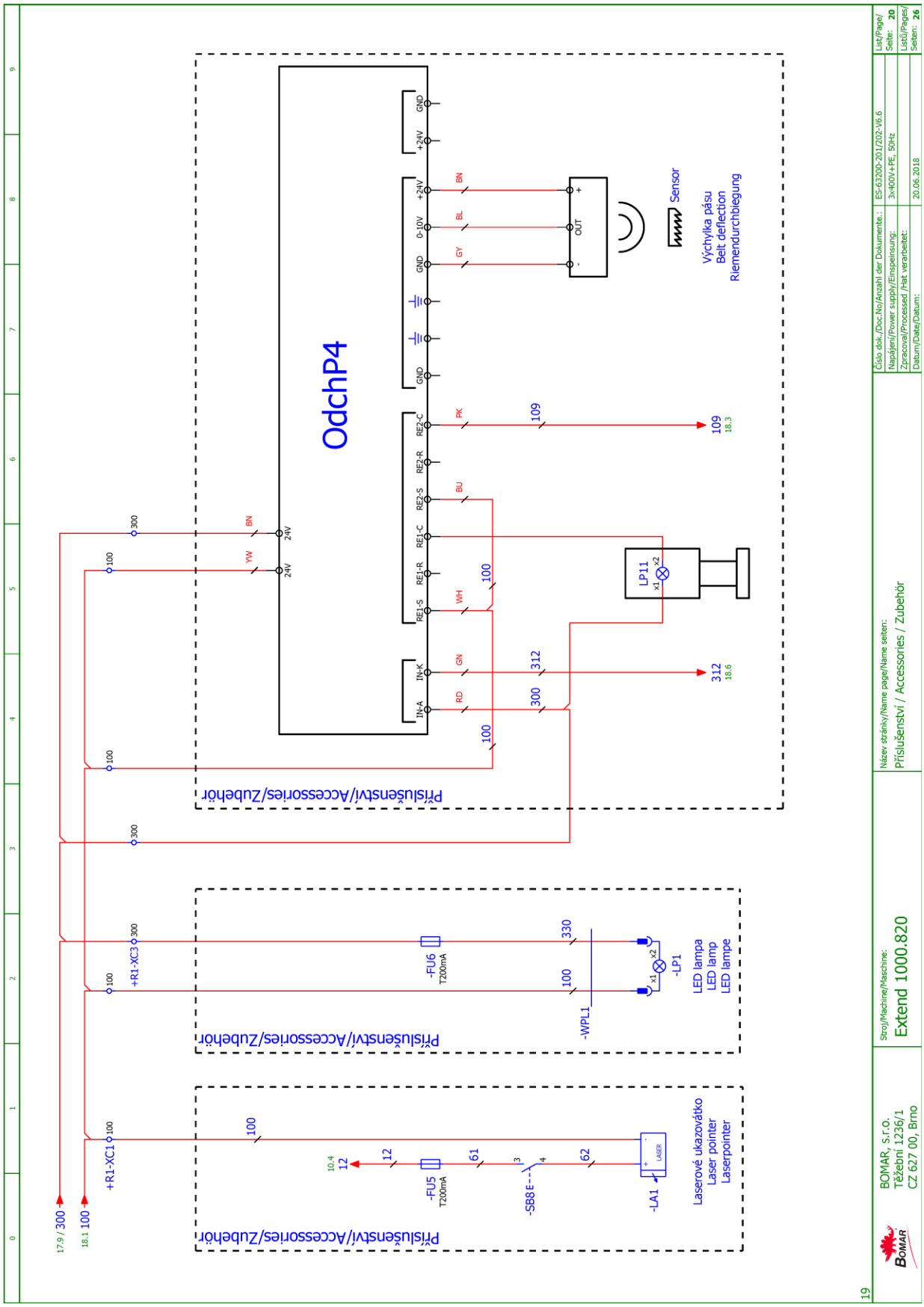

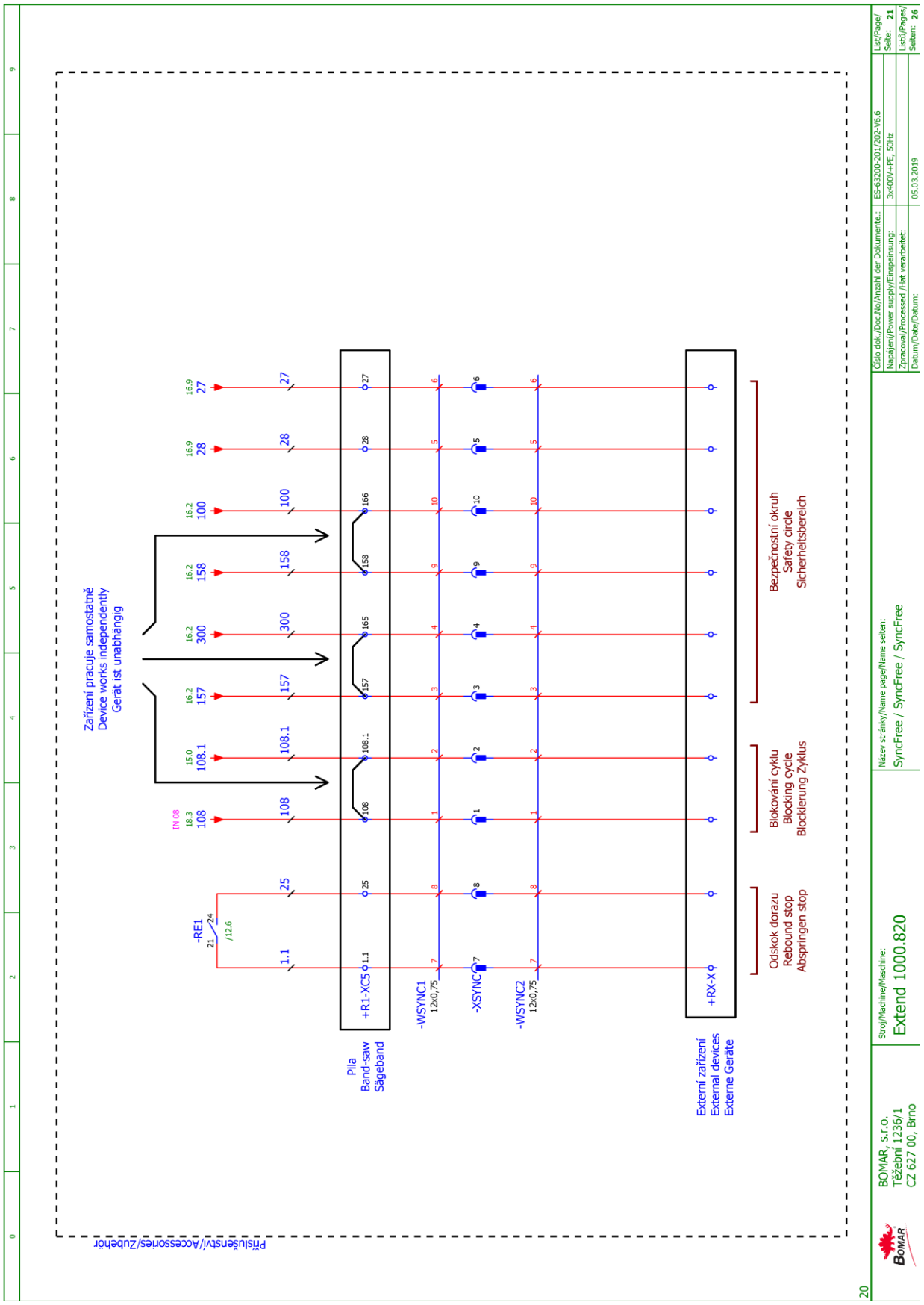
Zařízení pracuje samostatně
Device works independently
Gerät ist unabhängig
-RE1
/12.6
+R1-XC5
Pila
Band-saw
Sägeband
-WSYNC1
12x0,75
-XSYNC
-WSYNC2
12x0,75
+RX-X
Externí zařízení
External devices
Externe Geräte
Odskok dorazu
Rebound stop
Abspringen stop
Blokování cyklu
Blocking cycle
Blockierung Zyklus
Bezpečnostní okruh
Safety circle
Sicherheitsbereich
Příslušenství/Accessories/Zubehör
BOMAR, s.r.o.
Těžební 1236/1
CZ 627 00, Brno
Stroj/Machine/Maschine:
Extend 1000.820
Název stránky/Name page/Name seiten:
SyncFree / SyncFree / SyncFree
Číslo dok./Doc.No/Anzahl der Dokumente.:
ES-63200-201/202-V6.6
Napájení/Power supply/Einspeisung:
3x400V+PE, 50Hz
Zpracoval/Processed /Hat verarbeitet:
Datum/Date/Datum:
05.03.2019
List/Page/
Seite: 21
Listů/Pages/
Seiten: 26

6.2. Elektrické schema /Elektroschema /Electric scheme

0	1	2	3	4	5	6	7	8	9

Obsah / Table of contents / Inhalt

Strana Page Seite	Název strany Page name Seitenname	Datum Date Datum
1	Úvodní strana / Start page / Startseite	21.3.2016
2	Obsah/ Table of contents/ Inhaltsverzeichnis	11.4.2016
3	Kusovník artiklů / Parts list / Artikelstückliste	11.4.2016
3.a	Kusovník artiklů / Parts list / Artikelstückliste	11.4.2016
3.b	Kusovník artiklů / Parts list / Artikelstückliste	11.4.2016
3.c	Kusovník artiklů / Parts list / Artikelstückliste	11.4.2016
3.d	Kusovník artiklů / Parts list / Artikelstückliste	11.4.2016
3.e	Kusovník artiklů / Parts list / Artikelstückliste	11.4.2016
4	I/O řídící systém / I/O Control station / I/O Steuerung	16.3.2016
5	Rozmístění prvků v rozvaděči R1/ Placement of elements in enclosure R1/ Platzierung der Elemente im Schaltschrank R1	11.4.2016
6	Ovládací panel na rozvaděči / Control panel / Bedienpult	21.3.2016
7	Silová část M1 / Power part M1 / Feld partie M1	11.4.2016
8	Silová část M2,M3 / Power part M1,M2 / Feld partie M1,M2	11.4.2016
9	Silová část M4 / Power part M4 / Feld partie M4	11.4.2016
10	Deska zdroje / Power board / Netzgerat-Platte	6.4.2016
11	Stykače motorů, M5 / Motor contactor, M5 / Motor-Schutzschalter, M5	6.4.2016
12	Hydraulické ventily / Hydraulic valve / Hydroventil	11.4.2016
13	Hydraulické ventily / Hydraulic valve / Hydroventil	11.4.2016
14	Vstupy / Inputs / Eingänge	6.4.2016
15	Tlačítka ovládací panel / Button control panel / Taste Bedienpult	30.3.2016
16	Bezpečnostní okruh / Safety circle / Sicherheitsbereich	11.4.2016
17	Řídící systém / Control system / Steuersystem	11.4.2016
18	Snímač výšky ramene / Arm height sensor / Arm Höhensensor	16.3.2016
19	Příslušenství / Accessories / Zubehör	6.4.2016

1

Kusovník artiklů / Parts list / Stückliste

Označení přístroje Device identification Geräteidentifikation	Typ přístroje Device description Gerätebeschreibung	Objednací číslo Type number Typennummer	Výrobce Manufacturer Hersteller	Skladové číslo Part number Lagernummer	Množství Quantity Menge	Umístění Location Stelle
-ZD1	Napájecí zdroj - 15VAC/24VDC; 20VAC/28VDC Power supply unit - 15VAC/24VDC; 20VAC/28VDC Netzteil - 15VAC/24VDC; 20VAC/28VDC	ZDR-03	Bomar	265.915	1	/10.2
-BM1	Bezpečnostní relé 24VDC, 3NO Safety relay 24VDC, 3NO Sicherheitsrelais 24VDC, 3NO	BT50	ABB	91.051.063	1	/16.5
-CU1	Klávesnice - fóliová Touch-sensitive keyboard Folientastatur	31.R230-207	AKI ELECTRONIC,spol.s.r.o.	31.R230-207	1	/17.0
-FU1	Pojistka trubičková - 500mA/250V, pomalá, 5x20 Tube fuse - 500mA/250V, slow, 5x20 Rohrsicherung - 500 mA / 250 V, langsam, 5x20	T500mA/250V	ESKA	91.230.011	1	/10.4
-FU4	Pojistka trubičková - 6,3A/250V, pomalá, 5x20 Tube fuse - 6,3A/250V, slow, 5x20 Rohrsicherung - T6,3A / 250V, langsam, 5x20	T6,3A/250V	ESKA	91.230.002	1	/10.4
-RP1	Potenciometr 4k7 Potenciometer 4k7 Potentiometer 4k7	TP195 4k7/N20A	Elektronické součástky CZ, a.s	91.283.015	1	/9.6
-RP1	Hlavice potenciometru - 24mm Head of potentiometer 24mm Leiter Potentiometer 24mm	S8877 BLK	GES-ELECTRONICS, a.s.	91.060.063	1	/9.6
-RCF0	RFC-filtr - 7.5 kW, 3x230V, 50A RFC-filter - 7.5 kW, 3x230V, 50A RFC-filter - 7.5 kW, 3x230V, 50A	ATV 31 / 7,5 kW / V	Ing. Miroslav Vlček	91.041.054	1	/9.2
-RCF1	Filtr RFC vývodový Efferent RFC filter Ableitenden RFC Filter	FBOPR1624	Ing. Miroslav Vlček	91.041.015	1	/7.3
-RCF2	Filtr RFC vývodový Efferent RFC filter Ableitenden RFC Filter	FBOPR1624	Ing. Miroslav Vlček	91.041.015	1	/8.1
-RCF3	Filtr RFC vývodový Efferent RFC filter Ableitenden RFC Filter	FBOPR1624	Ing. Miroslav Vlček	91.041.015	1	/8.5
-RCF11	Filtr RFC vývodový Efferent RFC filter Ableitenden RFC Filter	FBOPR1624	Ing. Miroslav Vlček	91.041.015	1	/7.6

The manufacturer reserves right to use an equivalent replacement device.

2

Kusovník artiklů / Parts list / Stückliste

Označení přístroje Device identification Geräteidentifikation	Typ přístroje Device description Gerätebeschreibung	Objednací číslo Type number Typennummer	Výrobce Manufacturer Hersteller	Skladové číslo Part number Lagernummer	Množství Quantity Menge	Umístění Location Stelle
-RCF12	Filtr RFC vývodový Efferent RFC filter Ableitenden RFC Filter	FBOPR1624	Ing. Miroslav Vlček	91.041.015	1	/7.7
-FA1	Motorový spouštěč - 10A Motor starter - 10A Motorstarter - 10A	MS116-10,0	ABB	91.045.024	1	/7.4
-FA1	Pomocné kontakty - 1xNO+1xNC Auxiliary contacts - 1xNO+1xNC Hilfskontakte - 1xNO + 1xNC	HK1-11	ABB	91.046.005	1	/7.4
-FA2	Motorový spouštěč - 0.63A Motor starter - 0.63A Motorstarter - 0.63A	MS116-0,63	ABB	91.045.018	1	/8.2
-FA2	Pomocné kontakty - 1xNO+1xNC Auxiliary contacts - 1xNO+1xNC Hilfskontakte - 1xNO + 1xNC	HK1-11	ABB	91.046.005	1	/8.2
-FA3	Motorový spouštěč - 1.6A Motor starter - 1.6A Motorstarter - 1.6A	MS116-1,6	ABB	91.045.020	1	/8.6
-FA3	Pomocné kontakty - 1xNO+1xNC Auxiliary contacts - 1xNO+1xNC Hilfskontakte - 1xNO + 1xNC	HK1-11	ABB	91.046.005	1	/8.6
-FU1	Svorka pojistková Fuse terminal Sicherungsklemme	WK4/THSi5U	WIELAND	91.251.102	1	/10.4
-FU2	Svorka pojistková Fuse terminal Sicherungsklemme	WK4/THSi5U	WIELAND	91.251.102	1	/10.4
-FU2	Pojistka trubičková - 800mA/250V, pomalá, 5x20 Tube fuse - 800A/250V, slow, 5x20 Rohrsicherung - 800A / 250V, langsam, 5x20	T800mA/250V	ESKA	91.230.010	1	/10.4
-FU3	Svorka pojistková Fuse terminal Sicherungsklemme	WK4/THSi5U	WIELAND	91.251.102	1	/10.4
-FU3	Pojistka trubičková - 1A/250V, pomalá, 5x20 Tube fuse - 1A/250V, slow, 5x20 Rohrsicherung - 1A / 250V, langsam, 5x20	T1A/250V	ESKA	91.230.031	1	/10.4

The manufacturer reserves right to use an equivalent replacement device.

3

Kusovník artiklů / Parts list / Stückliste

Označení přístroje Device identification Geräteidentifikation	Typ přístroje Device description Gerätebeschreibung	Objednací číslo Type number Typennummer	Výrobce Manufacturer Hersteller	Skladové číslo Part number Lagernummer	Množství Quantity Menge	Umístění Location Stelle
-FU4	Svorka pojistková Fuse terminal Sicherungsklemme	WK4/THSi5U	WIELAND	91.251.102	1	/10.4
-HL1	Signálka zelená na adaptér Green light for Eaton adapter Grünes Licht für Eaton-Adapter	M22-LED-G	EATON	91.061.023	1	/13.8
-KM1	Ministýkač 4kW/400V Minicontactor 4kW/400V Minischutz 4kW/400V	B6S-30-01-1.7-71	ABB	91.040.049	1	/11.1
-KM2	Ministýkač 4kW/400V Minicontactor 4kW/400V Minischutz 4kW/400V	B6S-30-01-1.7-71	ABB	91.040.049	1	/11.3
-KM3	Ministýkač 4kW/400V Minicontactor 4kW/400V Minischutz 4kW/400V	B6S-30-01-1.7-71	ABB	91.040.049	1	/11.4
-KM11	Stýkač 11kW/400V Contactor 11kW/400V Schütz 11kW/400V	AF26-30-00-11	ABB	91.040.052	1	/16.7
-KM11	Pomocný kontakt - 1xNC Auxiliary contact - 1xNC Hilfskontakt - 1 xNC	CA4-01	ABB	91.041.043	1	/16.7
-KM12	Stýkač 11kW/400V Contactor 11kW/400V Schütz 11kW/400V	AF26-30-00-11	ABB	91.040.052	1	/16.8
-KM12	Pomocný kontakt - 1xNC Auxiliary contact - 1xNC Hilfskontakt - 1 xNC	CA4-01	ABB	91.041.043	1	/16.8
-PA1	Pojistkový odpojovač E-930 - 3P Fuse breaker E-930 - 3P Lasttrennschalter E-930 - 3P	E 933/50	ABB	91.241.015	1	/9.2
-PA2	Pojistkový odpojovač E-90 - 2P Fuse disconnector E-90 - 2P Sicherungstrenner E90 - 2P	E 92/32	ABB	91.241.013	1	/10.1
-QS1	3 pólový odpínač, 63 A Disconnector - 3P, 63A Trennschalter - 3P, 63A	OT63FT3	ABB	91.170.110	1	/7.0

The manufacturer reserves right to use an equivalent replacement device.

3.a

Kusovník artiklů / Parts list / Stückliste

Označení přístroje Device identification Geräteidentifikation	Typ přístroje Device description Gerätebeschreibung	Objednací číslo Type number Typennummer	Výrobce Manufacturer Hersteller	Skladové číslo Part number Lagernummer	Množství Quantity Menge	Umístění Location Stelle
-QS1	Rukojeť odpínače - černá Handle switch - black Griffschalter - schwarz	OHBS2RJ	ABB	91.180.015	1	/7.0
-QS1	Kryt svorek Terminal shroud Klemmenabdeckung	OTS63T3	ABB	91.170.024	1	/7.0
-RP1	Svorka rychloupínací Fastconnect clamp Fast Connect Klemm	WAGO 224-112	WAGO	91.250.009	3	/9.6
-SB1	Hlavice prosvětleného tlačítka zelená Green transparent switch Grün transparent Schalter	M22-DL-G	EATON	91.060.031	1	/15.0
-SB1	Upevňovací adaptér + 1NO Attaching adapter + 1NO Montageadapter + 1NO	M22-AK10	EATON	91.061.021	1	/15.0
-SB2	Upevňovací adaptér + 1NO Attaching adapter + 1NO Montageadapter + 1NO	M22-AK10	EATON	91.061.021	1	/15.1
-SB2	Hlavice tlačítka - černá Head button - black Kopftaste - schwarz	M22-D-S	EATON	91.060.035	1	/15.1
-SB3	Hlavice 3 polohového přepínače Head of 3 position switch Leiter der 3-Positionsschalter	M22-WRK3	EATON	91.060.051	1	/15.2
-SB3	Kontaktní blok - 1NO Contact block - 1NO Kontaktblock - 1NO	M22-K10	EATON	91.061.022	1	/15.2
-SB3	Upevňovací adaptér + 1NO Attaching adapter + 1NO Montageadapter + 1NO	M22-AK10	EATON	91.061.021	1	/15.2
-SB500	Total stop - hlavice + 3xNC Emergency-stop mushroom push - button + 3xNC Not-Aus-Pilz - Taster + 3 xNC	YW1B-V4E02R	IDEC	91.060.084	1	/16.4
-SB500	Kontakt - 1x NO Contact - 1x NO Kontakt - 1x NO	YW-E10	IDEC	91.061.044	1	/16.4

The manufacturer reserves right to use an equivalent replacement device.

3.b

Kusovník artiklů / Parts list / Stückliste

Označení přístroje Device identification Geräteidentifikation	Typ přístroje Device description Gerätebeschreibung	Objednací číslo Type number Typennummer	Výrobce Manufacturer Hersteller	Skladové číslo Part number Lagernummer	Množství Quantity Menge	Umístění Location Stelle
-TR1	Toroidal transformer - 0-230-400V/20V/15V, 150VA Toroidal transformer - 0-230-400V/20V/15V, 150VA Ringkerntransformator - 0-230V-400V/20V/15V, 150VA	400V/230V/20V/15V 6A/2A 150VA	KARBAN s.r.o.	91.080.026	1	/10.1
-SQ21	Bezpečnostní koncový spínač - 2xNC Safety Limit Switch - 2x NC Sicherheitsendschalter - 2x NC	QKS8	KEDU	91.173.012	1	/16.4
-SQ22	Bezpečnostní koncový spínač - 2xNC Safety Limit Switch - 2x NC Sicherheitsendschalter - 2x NC	QKS8	KEDU	91.173.012	1	/16.2
-PA1	Pojistka válcová - 40A, 14x51, rychlá, gG Cylindrical fuse - 40A, 14x51, fast, gG Zylindersicherungs - 40A, 14x51, schnell, gG	PV14 40A gG	OEZ	91.230.060	1	/9.2
-PA2	Pojistka válcová - 2A, 10x38, pomalá Tube fuse - 2A, 10x38, slow Rohrsicherung - 2A, 10x38, langsam	PV10 2A gG	OEZ	91.230.034	2	/10.1
-SQ1	Koncový spínač - 1NC+1NO Limit switch - 1NC+1NO Endschalter - 1NC+1NO	D4N-4A31	OMRON	91.173.007	1	/14.3
-SQ2	Koncový spínač - 1NC+1NO, M20 Limit switch - 1NC+1NO, M20 Endschalter - 1NC+1NO, M20	D4N-4A62	OMRON	91.173.008	1	/14.5
-SQ3	Koncový spínač - 1NC+1NO, M20, pomalý Limit switch - 1NC+1NO, M20, slow Endschalter -1NC+1NO, M20, langsam	D4N-4A32	OMRON	91.173.010	1	/14.6
-SQ4	Koncový spínač - 1NO + 1NC Limit switch - 1NO + 1NC Endschalter - 1NO + 1NC	FR 555-M2	PIZZATO	91.173.018	1	/14.7
-FM1	Frekvenční měnič - 7.5kW, 3x230VAC Frequency converter - 7.5kW, 3x230VAC Frequenzumrichter - 7,5kW, 3x230VAC	VFD075E23A	DELTA ELECTRONICS, INC.	91.012.136	1	/9.2
-SB7	Hlavice prosvětleného tlačítka žlutá The button head backlit yellow Der Knopf Kopf von hinten beleuchtet gelb	ZB5AW35	TELEMECANIQUE	91.060.023	1	/16.6
-CU1	Řídící obvod Control circuit Die Steuerschaltung	PRO-5.X	Bomar	91.995.221	1	/17.0

The manufacturer reserves right to use an equivalent replacement device.

3.c

BOMAR, s.r.o.
Těžební 1236/1
CZ 627 00, Brno

Stroj/Machine/Maschine: Extend 1000.820

Název stránky/Name page/Name seiten: Kusovník artiklů / Parts list / Artikelstückliste

Číslo dok./Doc.No/Anzahl der Dokumente.:	ES-63200-203-V6.4
Napájení/Power supply/Einspeinsung:	3x230V+PE, 50Hz
Zpracoval/Processed /Hat verarbeitet:	Kostka
Datum/Date/Datum:	11.4.2016

List/Page/Seite: 3.d
Listů/Pages/Seiten: 24

0	1	2	3	4	5	6	7	8	9

Kusovník artiklů / Parts list / Stückliste

Označení přístroje Device identification Geräteidentifikation	Typ přístroje Device description Gerätebeschreibung	Objednací číslo Type number Typennummer	Výrobce Manufacturer Hersteller	Skladové číslo Part number Lagernummer	Množství Quantity Menge	Umístění Location Stelle
-M5	Ventilátor 24VDC, 154CFM Fan 24VDC, 154CFM Fan 24VDC, 154CFM	RDH1238 B2	Xinruilian Electronic Co.	91.015.126	1	/11.7

The manufacturer reserves right to use an equivalent replacement device.

3.d

Extend 700.520

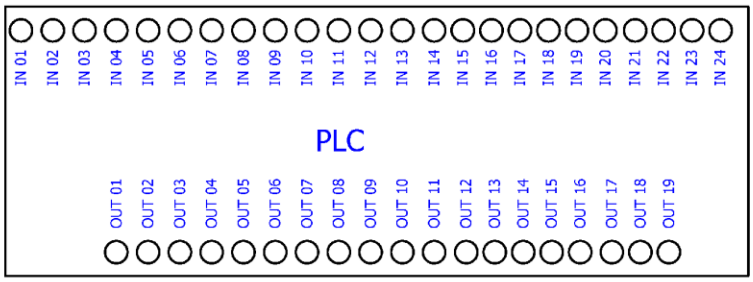

HW	
FW	

Pohled ze spodu/From under view/Blick nach

I/O	CZE	ENG	DE
IN 01	Svěrák upnut	Vice is clamped	Schraubstock ist gespannt
IN 02	Rameno dole	Arm is down	Rahmen ist unten
IN 03	Rameno nahoře	Arm is up	Rahmen ist oben
IN 04	Napnutí pásu	Blade tension	Bandspannung
IN 05	Motory OK	Motors OK	Motoren OK
IN 06	Bezpečnostní okruh uzavřen	Safety circle shut down	Sicherheitsschaltung gesperrt
IN 07	Tlačítko TOTAL STOP	Button TOTAL STOP	Taste TOTAL STOP
IN 08	Tlačítko START	Button START	Taste START
IN 09	Tlačítko STOP	Button STOP	Taste STOP
IN 10	MANUAL	MANUAL	MANUAL
IN 11	CYKLUS	CYCLE	ZYKLUS
IN 12	Kolize kostky	Cube collision	Klotzkollision
IN 13	NC	NC	NC
IN 14	NC	NC	NC
IN 15	NC	NC	NC
IN 16	NC	NC	NC
IN 17	NC	NC	NC
IN 18	NC	NC	NC
IN 19	Tlačítko napnout pás	Button band tension	Taste band spannen
IN 20	Tlačítko povolit pás	Button band release	Taste band lösen
IN 21	Tlačítko rameno nahoru	Button arm up	Taste Rahmen nach oben
IN 22	NC	NC	NC
IN 23	Přítlak upnut	Upper vice is clamped	Ober Schraubstock ist gespannt
IN 24	NC	NC	NC
OUT 01+	Start FM1	Start FM1	Start FM1
OUT 01-			
OUT 02+	NC	NC	NC
OUT 02-			
OUT 03+	NC	NC	NC
OUT 03-			
OUT 04	Motor chlazení	Coolant pump	Motor Kühlung
OUT 05	Čerpadlo hydrauliky	Hydraulic pump	Hydraulikpumpe
OUT 06	2.stupeň hydrauliky	Second level of hydraulic pump	Hydraulikpumpe 2.Stufe
OUT 07	Svěrák upnout	Vice clamp	Schraubstock spannen
OUT 08	Svěrák povolit	Release vice	Schraubstock lösen
OUT 09	NC	NC	NC
OUT 10	NC	NC	NC
OUT 11	Rameno nahoru	Arm up	Rahmen nach oben
OUT 12	Rameno dolů	Arm down	Rahmen nach unten
OUT 13	Rameno rychle	Arm fast	Rahmen schnell
OUT 14	Přítlak upnout	Upper vice clamp	Ober Schraubstock spannen
OUT 15	Přítlak povolit	Release upper vice	Ober Schraubstock lösen
OUT 16	Napnout pás	Sawblade tension	Spannen des Sägebandes
OUT 17	Uvolnit pás	Sawblade leave	Entspannen des Sägebandes
OUT 18	Mikronizer	Microniser	Mikronizer
OUT 19	Kontrolka start	Indicator start	Kontrollicht start

BOMAR, s.r.o.
Těžební 1236/1
CZ 627 00, Brno

Stroj/Machine/Maschine: Extend 1000.820

Název stránky/Name page/Name seiten: I/O řídící systém / I/O Control station / I/O Steuerung

Číslo ctáž./Dok.No/Anzahl der Dokumente: ES-63200-203-v6.4

Napájení/Power supply/Einspeisung: 3x230V+PE, 50Hz

Zpracoval/Processed /Hat verarbeitet: Kostka

Datum/Date/Datum: 16.3.2016

List/Page/Seite: 4

List/Pages/Seiten: 24

3.e

Schémata
Schemas
Schematics

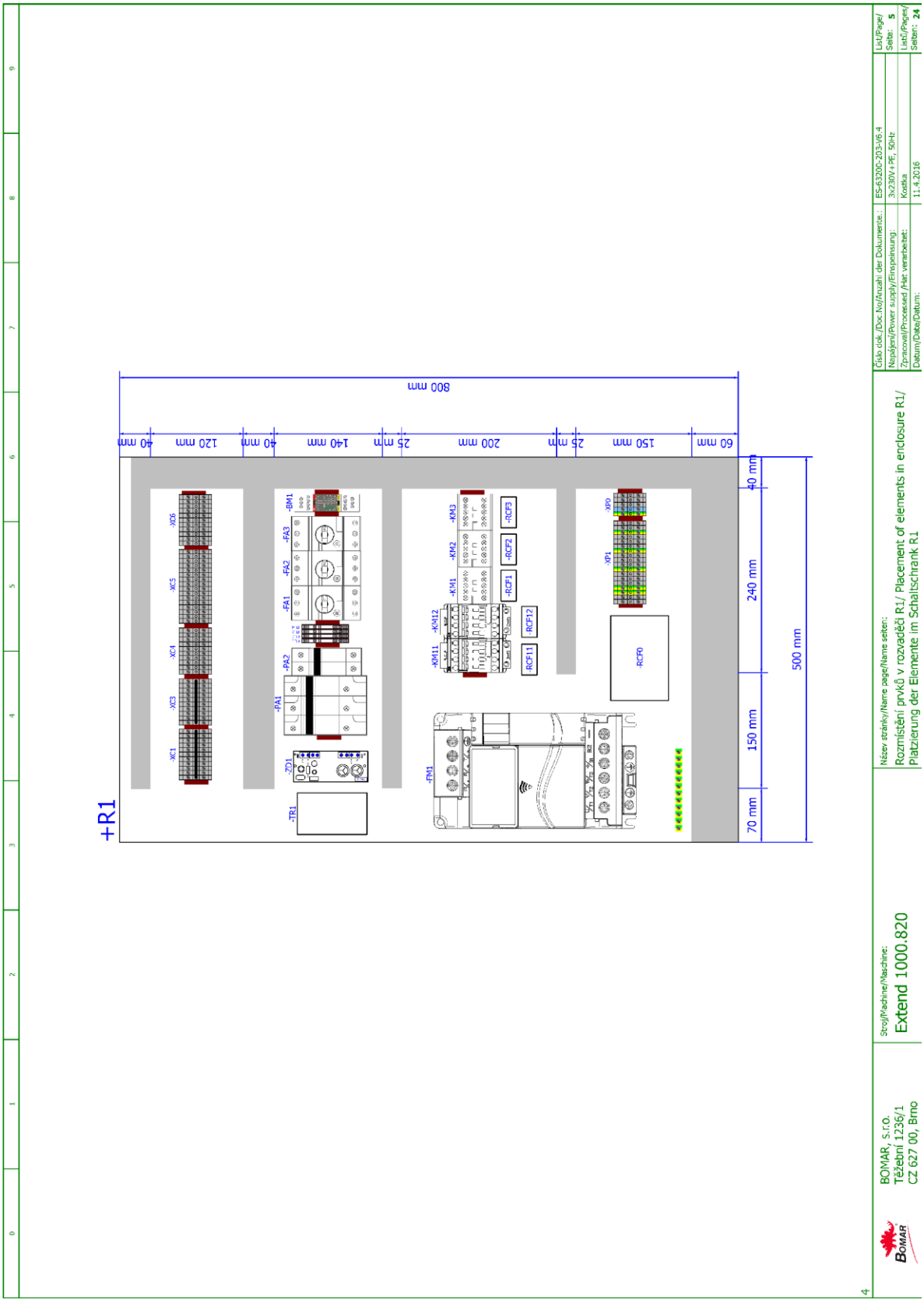
+R1
800 mm
40 mm
120 mm
40 mm
140 mm
25 mm
200 mm
25 mm
150 mm
60 mm
40 mm
240 mm
150 mm
70 mm
500 mm
-XC1
-XC3
-XC4
-XC5
-XC6
-PA1
-PA2
-FA1
-FA2
-FA3
-BM1
-ZD1
-TR1
-FM1
-KM11
-KM12
-KM1
-KM2
-KM3
-RCF1
-RCF2
-RCF3
-RCF11
-RCF12
-RCF0
-XP0
-XP1
Číslo dok. /Doc. No/Anzahl der Dokumente: ES-6320C-203-V6-4
Napájení/Power supply/Einspeisung: 3x230V + PE, 50Hz
Zpracoval/Processed /Hat verarbeitet: Kostka
Datum/Date/Datum: 11.4.2016
List/Page/ Seite: 5
List5/Pages/ Seiten: 24
Název stránky/Name page/Name seiten:
Rozmístění prvků v rozváděči R1/ Placement of elements in enclosure R1/ Platzierung der Elemente im Schaltschrank R1
Stroj/Machine/Maschine:
Extend 1000.820
BOMAR, s.r.o.
Těžební 1236/1
CZ 627 00, Brno
4

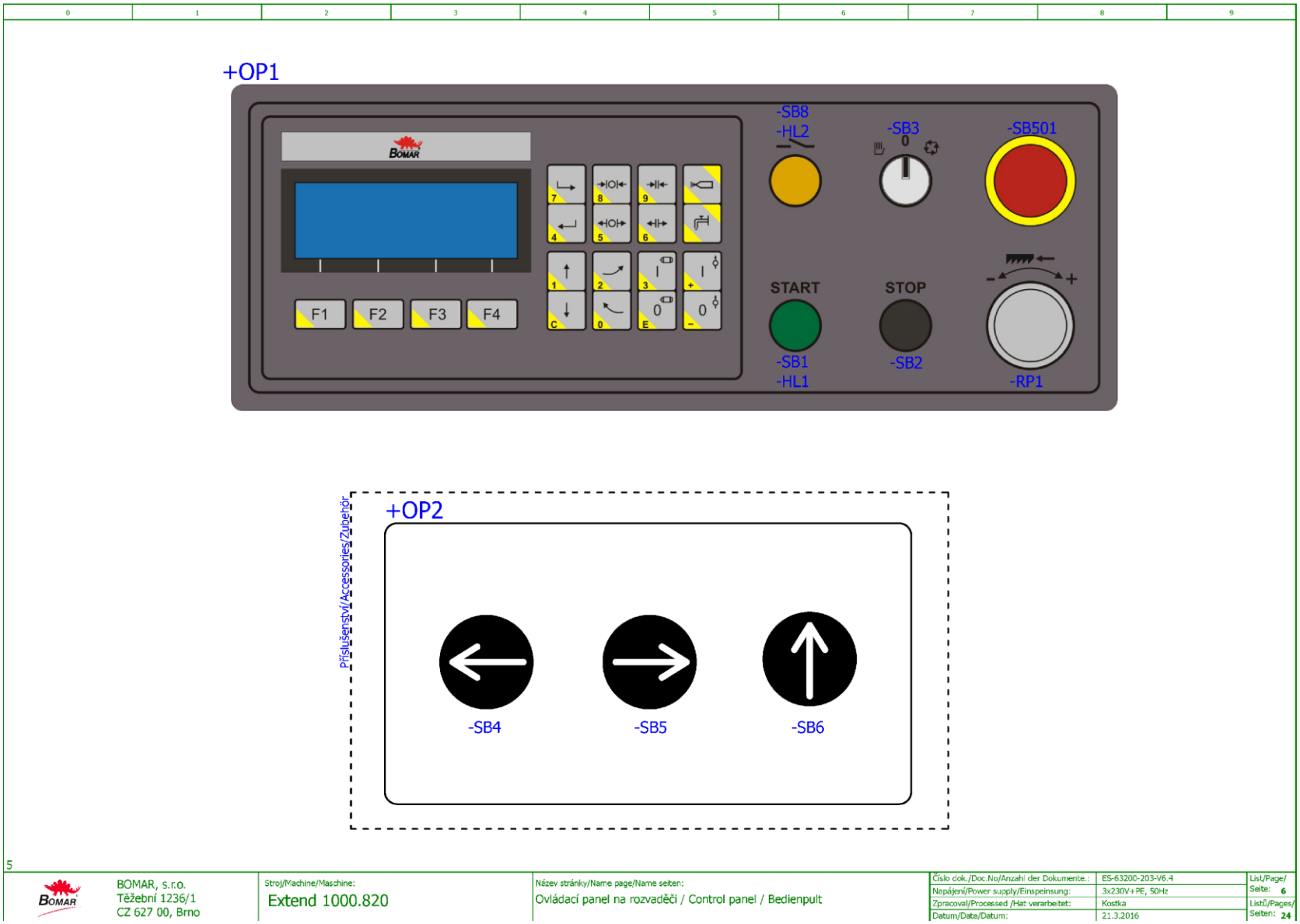
+OP1
-SB8
-HL2
-SB3
-SB501
START
STOP
-SB1
-HL1
-SB2
-RP1
F1
F2
F3
F4
+OP2
Příslušenství/Accessories/Zubehör
-SB4
-SB5
-SB6
5
BOMAR, s.r.o.
Těžební 1236/1
CZ 627 00, Brno
Stroj/Machine/Maschine:
Extend 1000.820
Název stránky/Name page/Name seiten:
Ovládací panel na rozvaděči / Control panel / Bedienpult
Číslo dok./Doc.No/Anzahl der Dokumente.: ES-63200-203-V6.4
Napájení/Power supply/Einspeinsung: 3x230V+PE, 50Hz
Zpracoval/Processed /Hat verarbeitet: Kostka
Datum/Date/Datum: 21.3.2016
List/Page/Seite: 6
Listů/Pages/Seiten: 24

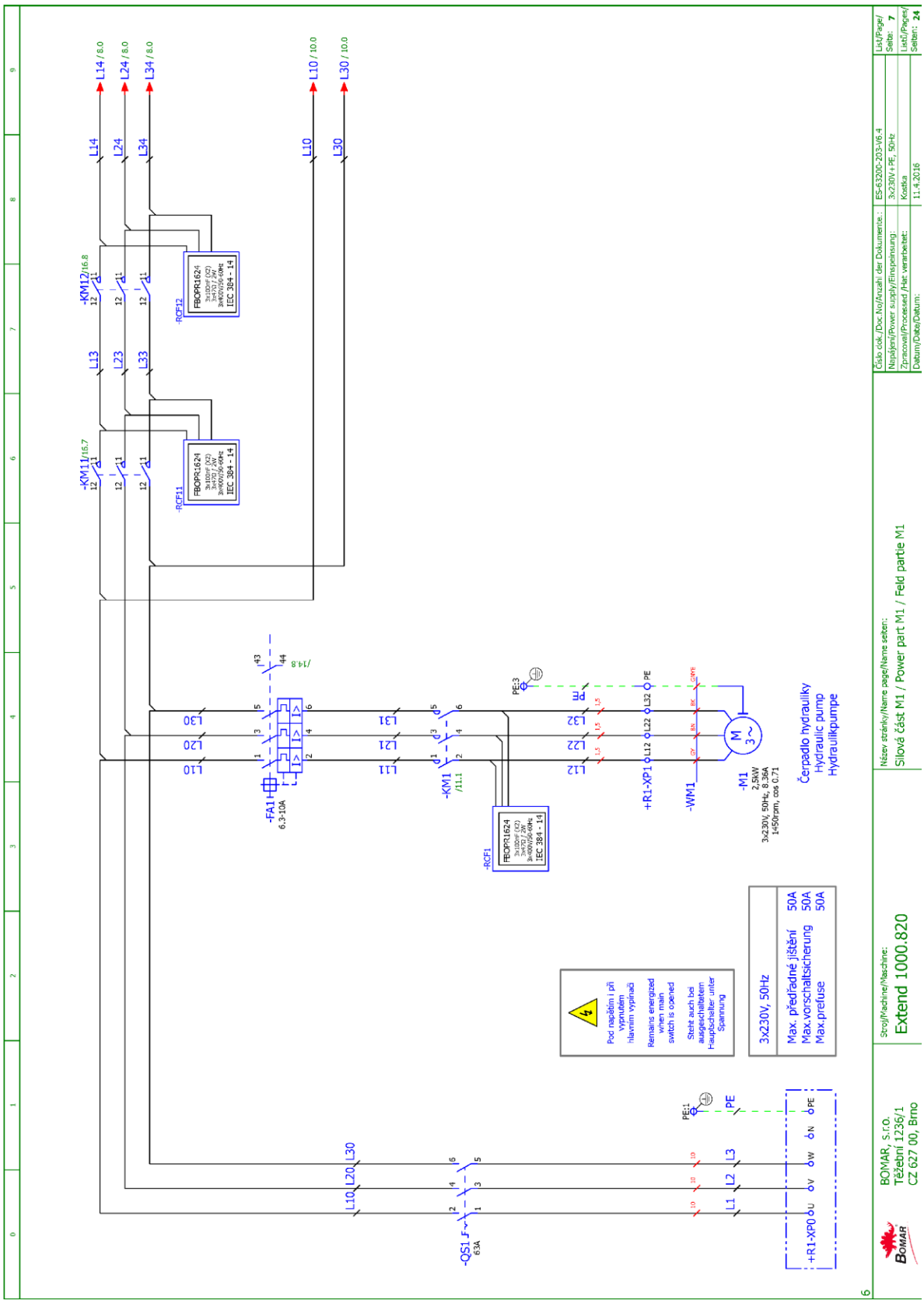
Číslo dok. /Doc. No/Anzahl der Dokumente: ES-6320C-203-V6.4
Napájení/Power supply/Einspeisung: 3x230V + PE, 50Hz
Zpracoval/Processed /Hat verarbeitet: Kostka
Datum/Date/Datum: 11.4.2016
List/Page/ Seite: 7
List/Pages/ Seiten: 24
Název stránky/Name page/Name seiten:
Silová část M1 / Power part M1 / Feld partie M1
Stroj/Machine/Maschine:
Extend 1000.820
BOMAR, s.r.o.
Těžební 1236/1
CZ 627 00, Brno
Pod napětím i při vypnutém hlavním vypínači
Remains energized when main switch is opened
Steht auch bei ausgeschaltetem Hauptschalter unter Spannung
3x230V, 50Hz
Max. předřadné jištění 50A
Max.vorschaltsicherung 50A
Max.prefuse
Čerpadlo hydrauliky
Hydraulic pump
Hydraulikpumpe
-M1
2,5kW
3x230V, 50Hz, 8.36A
1450rpm, cos 0.71
-FA1
6.3-10A
-QS1
63A
-KM11
-KM12
-RCF1
-RCF11
-RCF12
-KM1
+R1-XP1
-WM1
+R1-XP0
L14 / 8.0
L24 / 8.0
L34 / 8.0
L10 / 10.0
L30 / 10.0

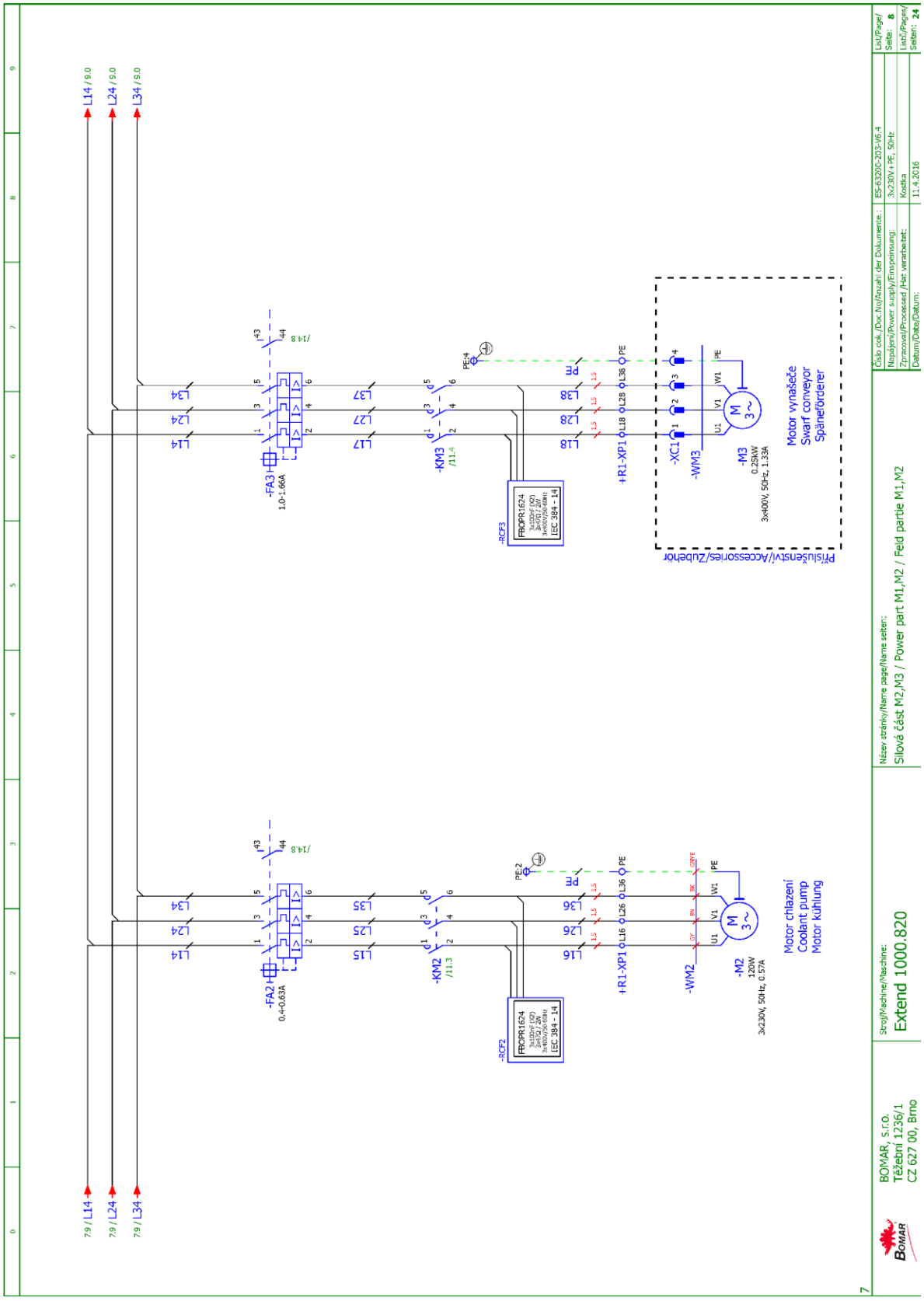
L14 / 9.0
L24 / 9.0
L34 / 9.0
7.9 / L14
7.9 / L24
7.9 / L34
-FA3
1.0-1.66A
-FA2
0,4-0,63A
-KM3
/11.4
-KM2
/11.3
-RCF3
-RCF2
FRCPR1624
IEC 394 - 14
+R1-XP1
-XC1
-WM3
-WM2
-M3
0.25KW
3x400V, 50Hz, 1.33A
-M2
120W
3x230V, 50Hz, 0.57A
Motor vynašeče
Swarf conveyor
Späneförderer
Motor chlazení
Coolant pump
Motor kühlung
Příslušenství/Accessories/Zubehör
Číslo dok./Doc.No/Anzahl der Dokumente:: ES-63200-203-J6.4
Napájení/Power supply/Einspeisung: 3x230V+PE, 50Hz
Zpracoval/Processed /Hat verarbeitet: Kostka
Datum/Date/Datum: 11.4.2016
Název stránky/Name page/Name seiten:
Silová část M2,M3 / Power part M1,M2 / Feld partie M1,M2
Stroj/Machine/Maschine:
Extend 1000.820
BOMAR, S.r.o.
Těžební 1236/1
CZ 627 00, Brno

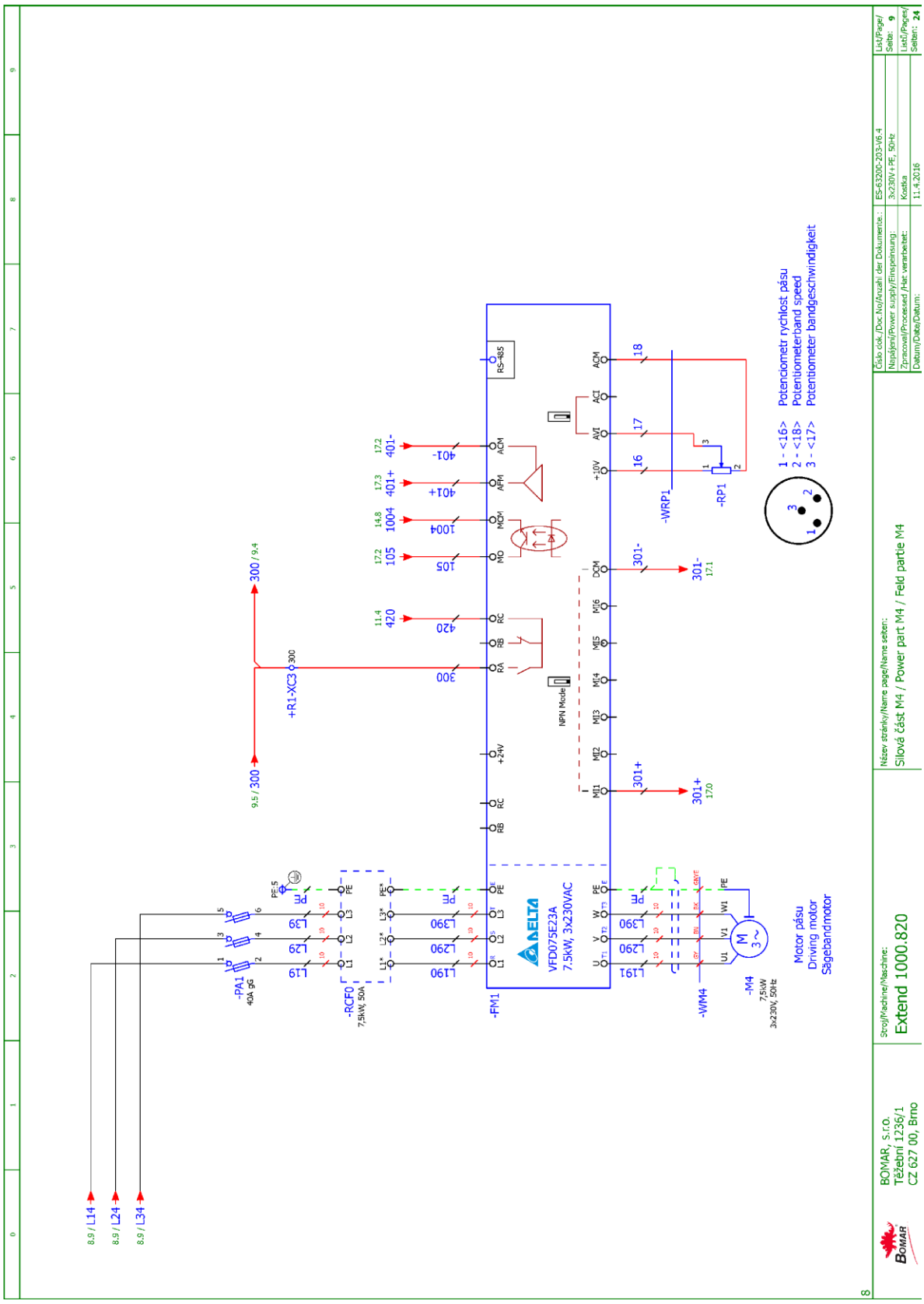
8.9 / L14
8.9 / L24
8.9 / L34
-PA1
40A gG
-RCF0
7,5kW, 50A
-FM1
DELTA
VFD075E23A
7.5kW, 3x230VAC
-WM4
-M4
7,5kW
3x230V, 50Hz
Motor pásu
Driving motor
Sägebandmotor
9.5 / 300
300 / 9.4
+R1-XC3
NPN Mode
RS-485
-WRP1
-RP1
1 - <16>
2 - <18>
3 - <17>
Potenciometr rychlost pásu
Potentiometerband speed
Potentiometer bandgeschwindigkeit
BOMAR, s.r.o.
Těžební 1236/1
CZ 627 00, Brno
Stroj/Machine/Maschine:
Extend 1000.820
Název stránky/Name page/Name seiten:
Silová část M4 / Power part M4 / Feld partie M4
ES-6320C-203-V6-4
3x230V + PE, 50Hz
Kostka
11.4.2016
Seite: 9
Seiten: 24

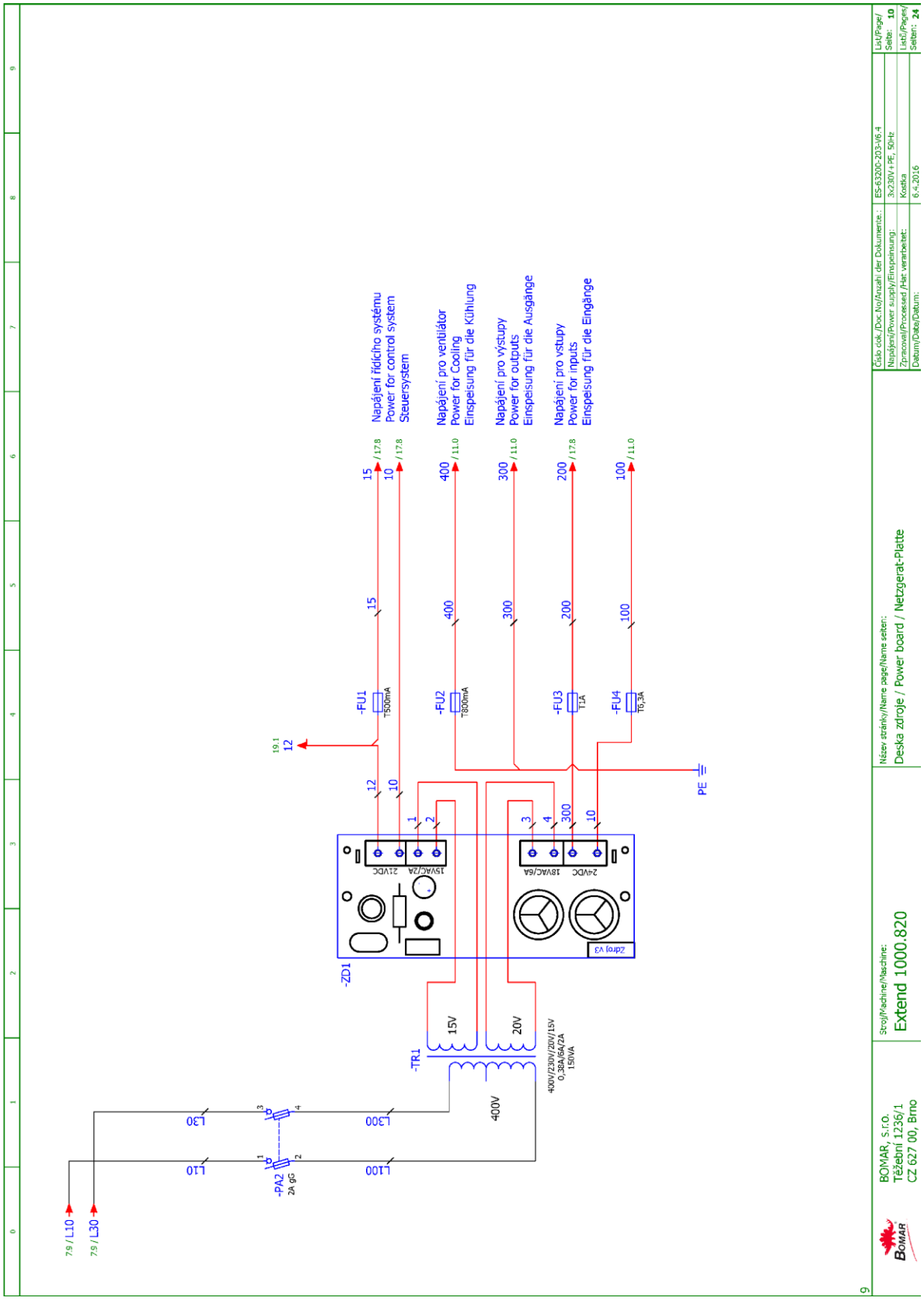
Napájení řídícího systému
Power for control system
Steuersystem
Napájení pro ventilátor
Power for Cooling
Einspeisung für die Kühlung
Napájení pro výstupy
Power for outputs
Einspeisung für die Ausgänge
Napájení pro vstupy
Power for inputs
Einspeisung für die Eingänge
-FU1
T500mA
-FU2
T800mA
-FU3
T1A
-FU4
T0,3A
-ZD1
Zdroj V3
-TR1
400V/230V/20V/15V
0,38A/6A/2A
150VA
-PA2
2A gG
L10
L30
L100
L300
PE
Název stránky/Name page/Name seiten:
Deska zdroje / Power board / Netzgerat-Platte
Stroj/Machine/Maschine:
Extend 1000.820
BOMAR, s.r.o.
Těžební 1236/1
CZ 627 00, Brno
Číslo dok./Doc.No/Anzahl der Dokumente:
ES-63200-203-J6.4
Napájení/Power supply/Einspeisung:
3x230V+PE, 50Hz
Zpracoval/Processed /Har verarbeitet:
Kostka
Datum/Date/Datum:
6.4.2016
List/Page/Seite: 10
Listů/Pages/Seiten: 24

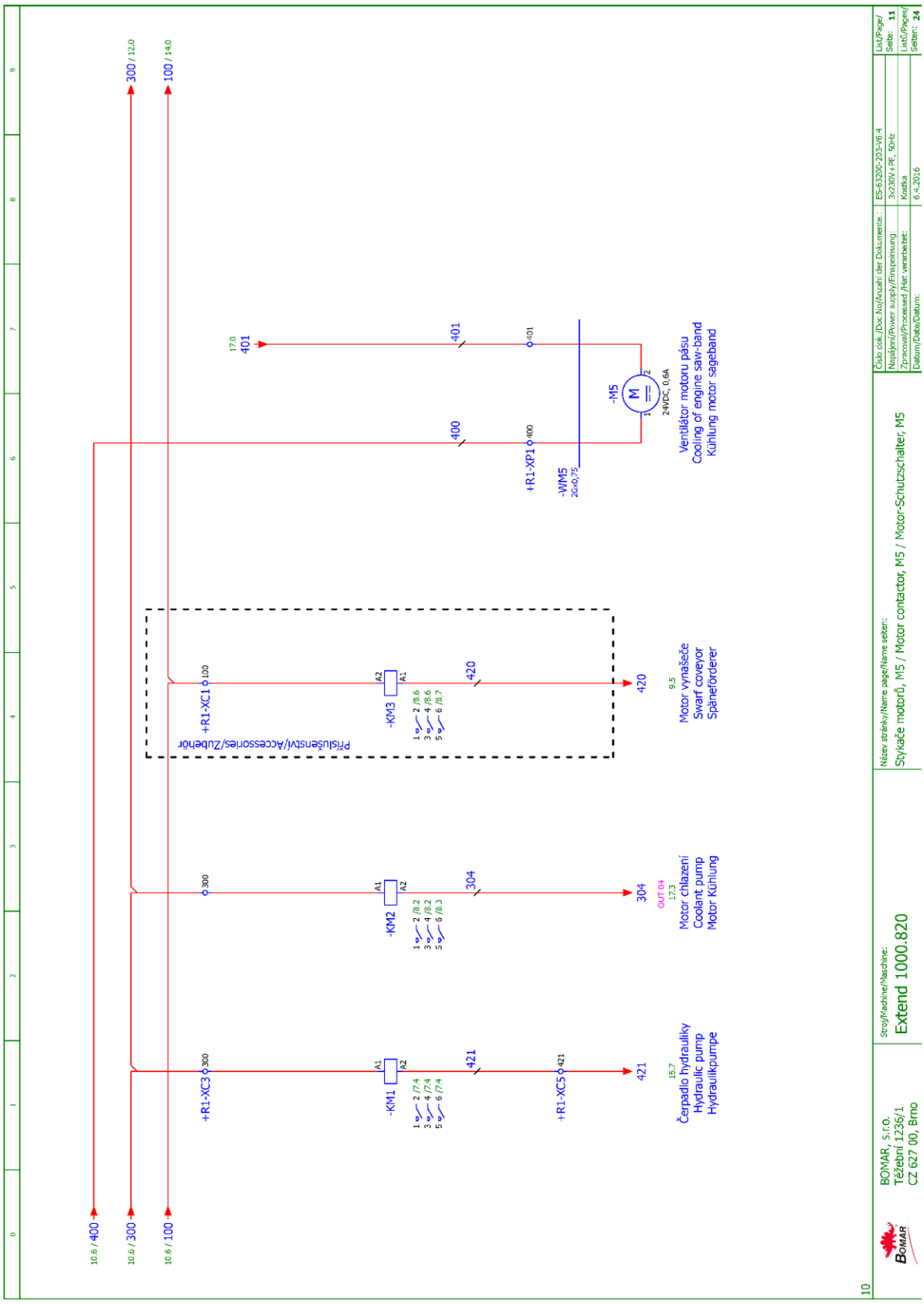
10.6 / 400
10.6 / 300
10.6 / 100
300 / 12.0
100 / 14.0
+R1-XC3
300
-KM1
A1
A2
1 2 /7.4
3 4 /7.4
5 6 /7.4
421
+R1-XC5
421
15.7
Čerpadlo hydrauliky
Hydraulic pump
Hydraulikpumpe
+R1-XC1
100
Příslušenství/Accessories/Zubehör
-KM2
1 2 /8.2
3 4 /8.2
5 6 /8.3
304
304
OUT 04
17.3
Motor chlazení
Coolant pump
Motor Kühlung
-KM3
1 2 /8.6
3 4 /8.6
5 6 /8.7
420
420
9.5
Motor vynašeče
Swarf coveyor
Späneförderer
17.0
401
401
400
+R1-XP1
400
401
-WM5
2Gx0,75
-M5
M
24VDC, 0,6A
Ventilátor motoru pásu
Cooling of engine saw-band
Kühlung motor sägeband
BOMAR, s.r.o.
Těžební 1236/1
CZ 627 00, Brno
Stroj/Machine/Maschine:
Extend 1000.820
Název stránky/Name page/Name seiten:
Stykače motorů, M5 / Motor contactor, M5 / Motor-Schutzschalter; M5
Číslo dok./Doc. No/Anzahl der Dokumente: ES-6320D-203-V6-4
Napájení/Power supply/Einspeisung: 3x230V + PE, 50Hz
Zpracoval/Processed /Hat verarbeitet: Kodka
Datum/Date/Datum: 6.4.2016
List/Page/ Seite: 11
List5/Pages/ Seiten: 24
10

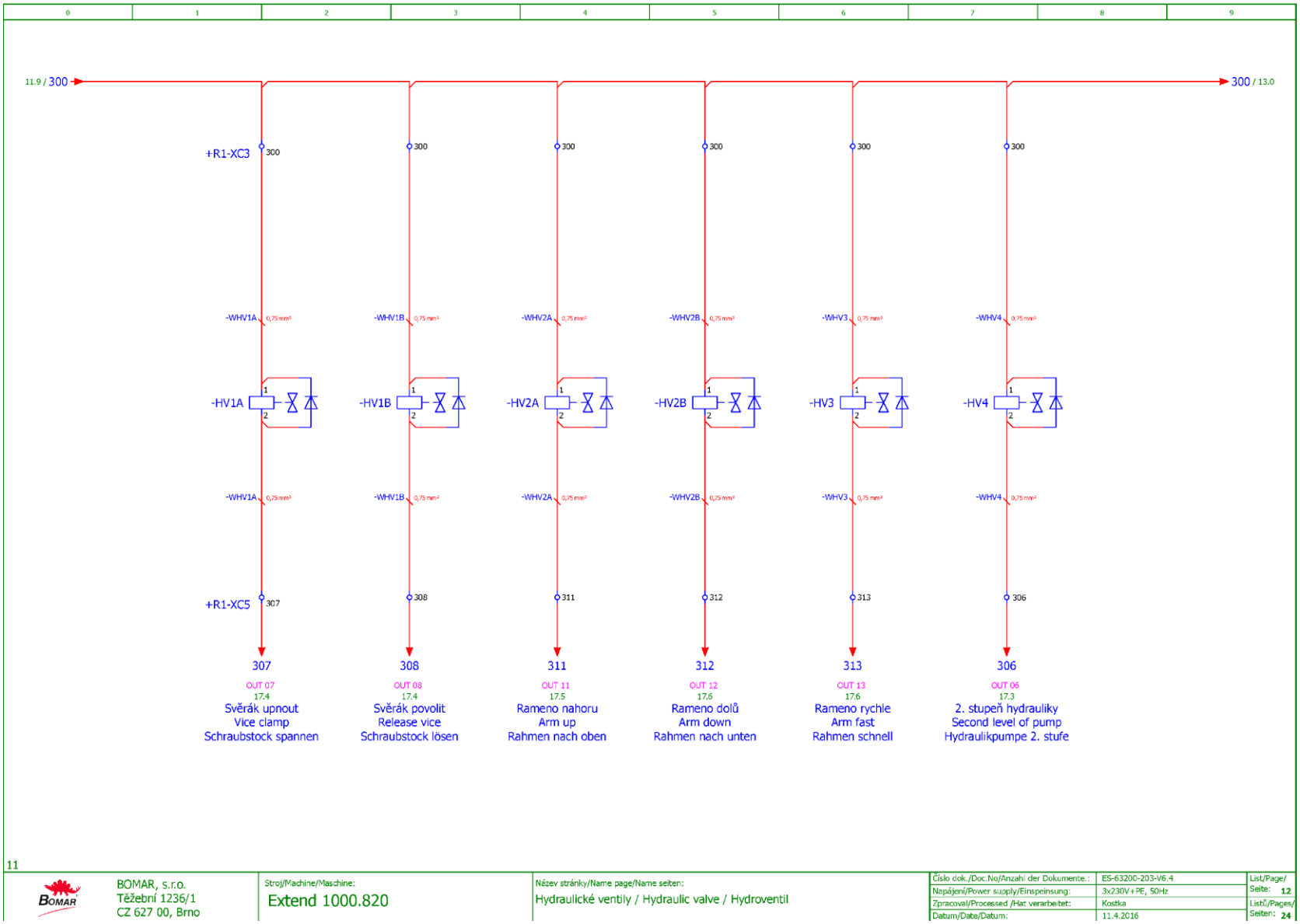
11.9 / 300
300 / 13.0
+R1-XC3
300
-WHV1A
-WHV1B
-WHV2A
-WHV2B
-WHV3
-WHV4
0,75 mm²
-HV1A
-HV1B
-HV2A
-HV2B
-HV3
-HV4
+R1-XC5
307
308
311
312
313
306
OUT 07
17.4
Svěrák upnout
Vice clamp
Schraubstock spannen
OUT 08
17.4
Svěrák povolit
Release vice
Schraubstock lösen
OUT 11
17.5
Rameno nahoru
Arm up
Rahmen nach oben
OUT 12
17.6
Rameno dolů
Arm down
Rahmen nach unten
OUT 13
17.6
Rameno rychle
Arm fast
Rahmen schnell
OUT 06
17.3
2. stupeň hydrauliky
Second level of pump
Hydraulikpumpe 2. stufe
11
BOMAR, s.r.o.
Těžební 1236/1
CZ 627 00, Brno
Stroj/Machine/Maschine:
Extend 1000.820
Název stránky/Name page/Name seiten:
Hydraulické ventily / Hydraulic valve / Hydroventil
Číslo dok./Doc.No/Anzahl der Dokumente.: ES-63200-203-V6.4
Napájení/Power supply/Einspeinsung: 3x230V+PE, 50Hz
Zpracoval/Processed /Hat verarbeitet: Kostka
Datum/Date/Datum: 11.4.2016
List/Page/Seite: 12
Listů/Pages/Seiten: 24

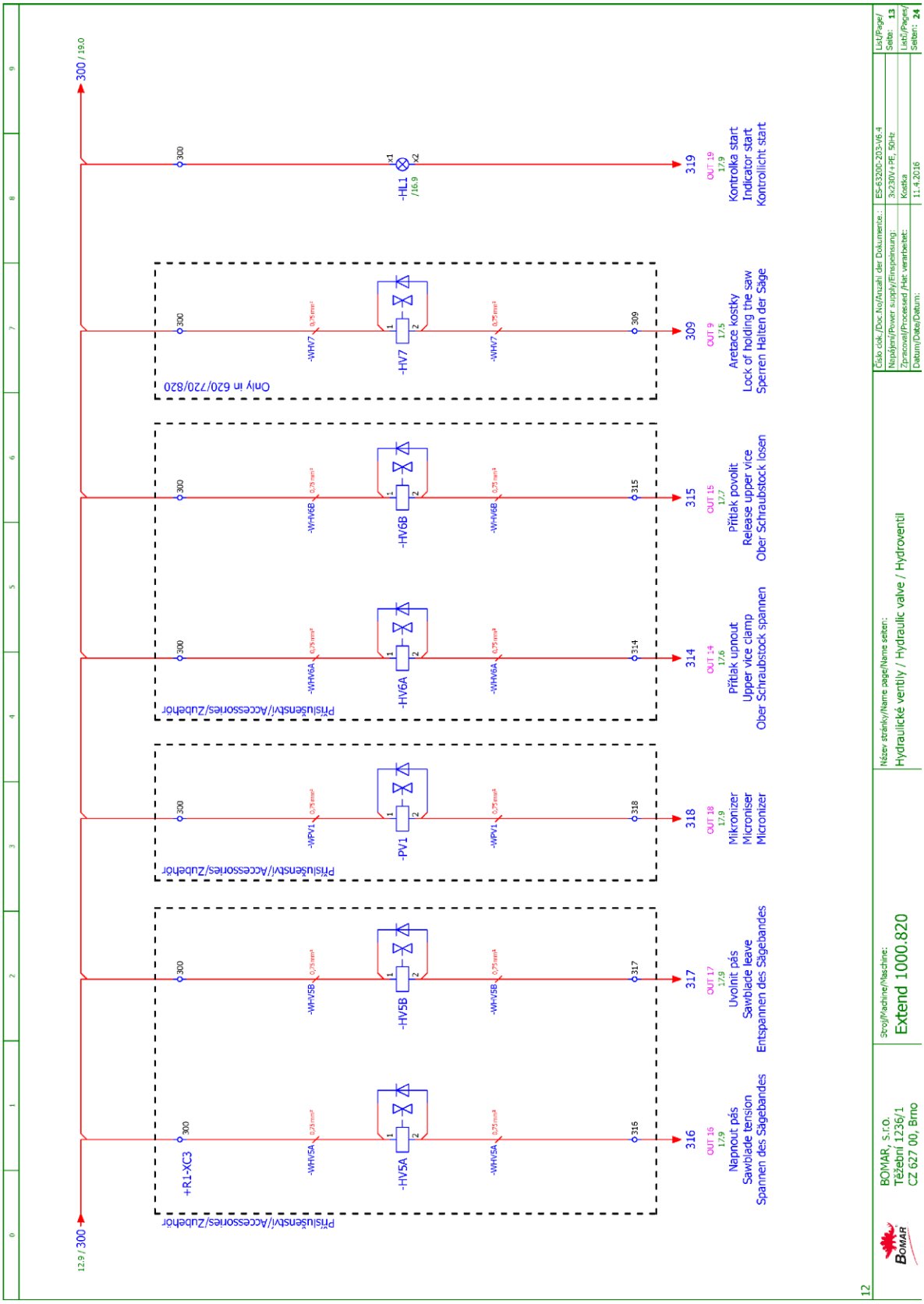
12.9 / 300
300 / 19.0
Příslušenství/Accessories/Zubehör
+R1->X3
-WHV5A
-HV5A
-WHV5B
-HV5B
316
317
OUT 16
1.7.9
Napnout pás
Sawblade tension
Spannen des Sägebandes
OUT 17
1.7.9
Uvolnit pás
Sawblade leave
Entspannen des Sägebandes
-WPV1
-PV1
318
OUT 18
1.7.9
Mikronizer
Microniser
Micronizer
-WHV6A
-HV6A
-WHV6B
-HV6B
314
315
OUT 14
1.7.6
Přítlak upnout
Upper vice clamp
Ober Schraubstock spannen
OUT 15
1.7.7
Přítlak povolit
Release upper vice
Ober Schraubstock losen
Only in 620/720/820
-WHV7
-HV7
309
OUT 9
1.7.5
Aretace kostky
Lock of holding the saw
Sperren Halten der Säge
-HL1
/16.9
x1
x2
319
OUT 19
1.7.9
Kontrolka start
Indicator start
Kontrollicht start
BOMAR, s.r.o.
Těžební 1236/1
CZ 627 00, Brno
Stroj/Machine/Maschine:
Extend 1000.820
Název stránky/Name page/Name seiten:
Hydraulické ventily / Hydraulic valve / Hydroventil
Číslo ček./Doc.No/Anzahl der Dokumente:
ES-63200-203-V6-4
Napájení/Power supply/Einspeisung:
3x230V + PE, 50Hz
Zpracoval/Processed /Hat verarbeitet:
Kostka
Datum/Date/Datum:
11.4.2016
List/Page/
Seite: 13
List5/Pages/
Seiten: 24
12

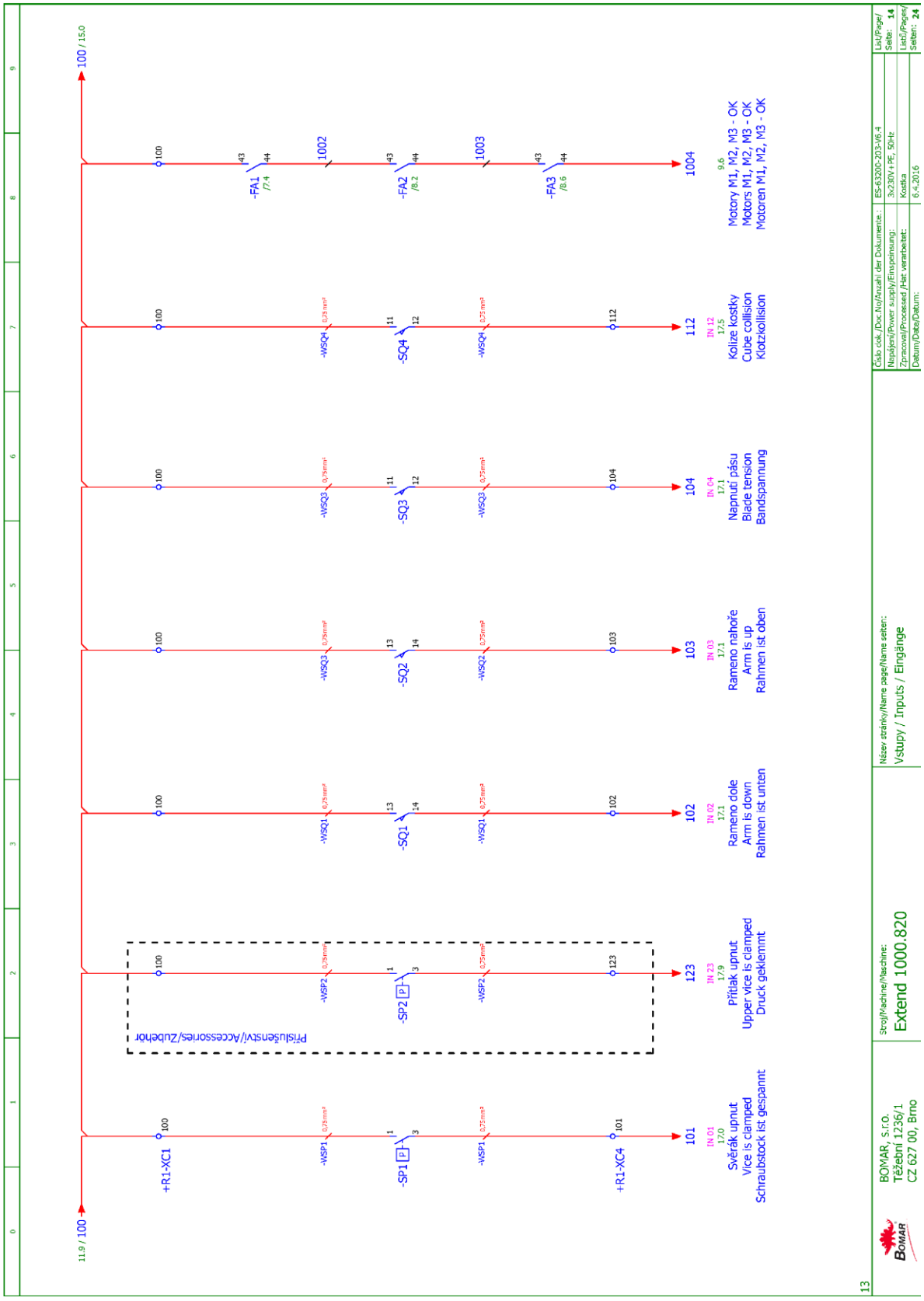
11.9 / 100
100 / 15.0
+R1-XC1
-WSP1
-SP1
101
IN 01
1.7.0
Svěrák upnut
Vice is clamped
Schraubstock ist gespannt
Příslušenství/Accessories/Zubehör
-WSP2
-SP2
123
IN 23
1.7.9
Přítlak upnut
Upper vice is clamped
Druck geklemmt
-WSQ1
-SQ1
102
IN 02
1.7.1
Rameno dole
Arm is down
Rahmen ist unten
-WSQ2
-SQ2
103
IN 03
1.7.1
Rameno nahoře
Arm is up
Rahmen ist oben
-WSQ3
-SQ3
104
IN 04
1.7.1
Napnutí pásu
Blade tension
Bandspannung
-WSQ4
-SQ4
112
IN 12
1.7.5
Kolize kostky
Cube collision
Klotzkollision
-FA1
/7.4
1002
-FA2
/8.2
1003
-FA3
/8.6
1004
9.6
Motory M1, M2, M3 - OK
Motors M1, M2, M3 - OK
Motoren M1, M2, M3 - OK
13
BOMAR, S.r.o.
Těžební 1236/1
CZ 627 00, Brno
Stroj/Machine/Maschine:
Extend 1000.820
Název stránky/Name page/Name seiten:
Vstupy / Inputs / Eingänge
Číslo dok./Doc.No/Anzahl der Dokumente:
ES-63200-203-J6.4
Napájení/Power supply/Einspeisung:
3x230V+PE, 50Hz
Zpracoval/Processed /Hat verarbeitet:
Kostka
Datum/Date/Datum:
6.4.2016
List/Page/Seite: 14
Listů/Pages/Seiten: 24

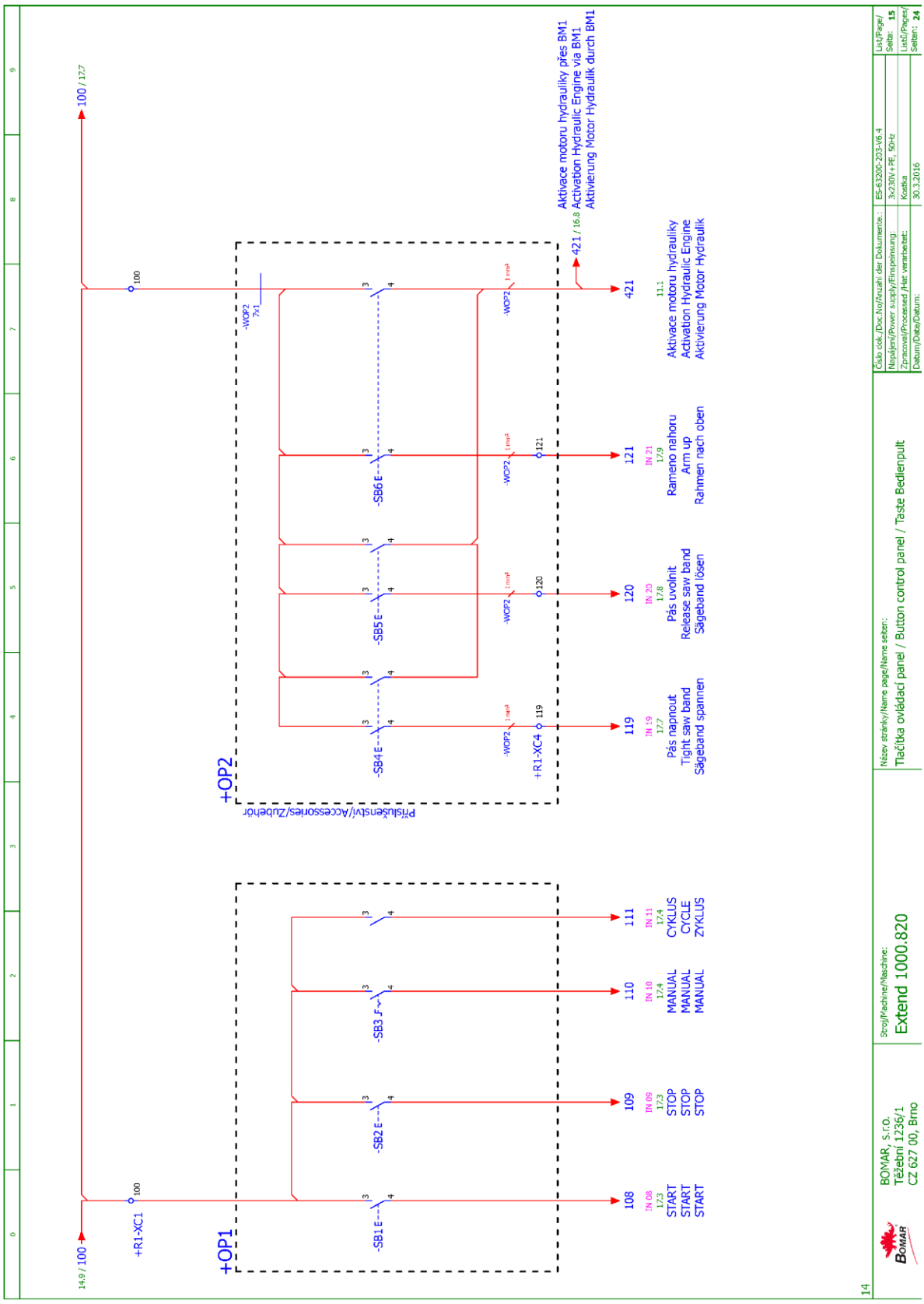
14.9 / 100
100 / 17.7
+R1-XC1
100
+OP1
-SB1 E
-SB2 E
-SB3 F
108
109
110
111
START
START
START
STOP
STOP
STOP
MANUAL
MANUAL
MANUAL
CYKLUS
CYCLE
ZYKLUS
+OP2
Příslušenství/Accessories/Zubehör
-SB4 E
-SB5 E
-SB6 E
-WOP2
+R1-XC4
119
120
121
421
Pás napnout
Tight saw band
Sägeband spannen
Pás uvolnit
Release saw band
Sägeband lösen
Rameno nahoru
Arm up
Rahmen nach oben
Aktivace motoru hydrauliky
Activation Hydraulic Engine
Aktivierung Motor Hydraulik
Aktivace motoru hydrauliky přes BM1
Activation Hydraulic Engine via BM1
Aktivierung Motor Hydraulik durch BM1
421 / 16.8
Název stránky/Name page/Name seiten:
Tlačítka ovládací panel / Button control panel / Taste Bedienpult
Stroj/Machine/Maschine:
Extend 1000.820
BOMAR, s.r.o.
Těžební 1236/1
CZ 627 00, Brno
ES-6320D-203-V6-4
3x230V + PE, 50Hz
Kostka
30.3.2016
Seite: 15
Seiten: 24
14

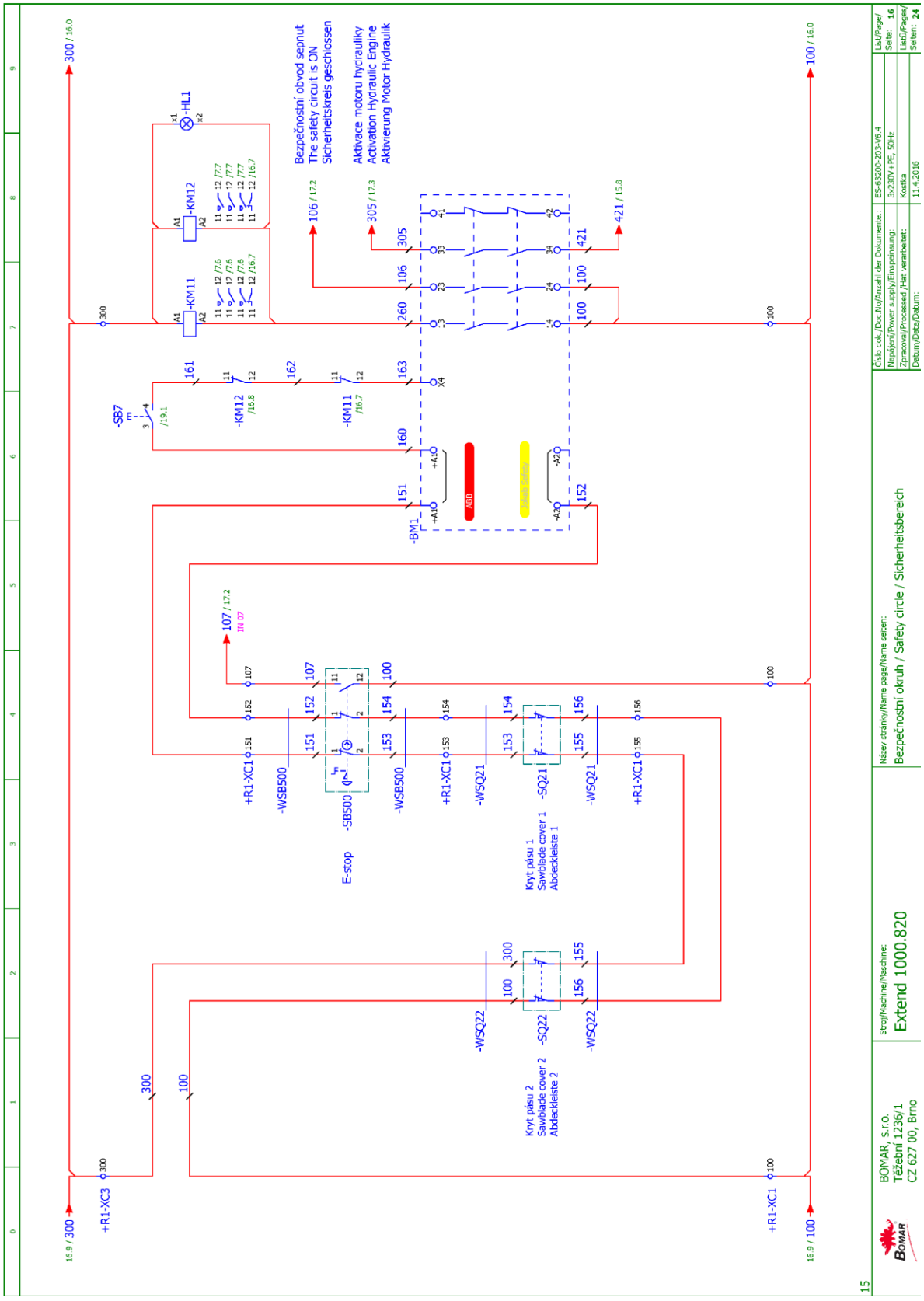
Bezpečnostní obvod sepnut
The safety circuit is ON
Sicherheitskreis geschlossen
Aktivace motoru hydrauliky
Activation Hydraulic Engine
Aktivierung Motor Hydraulik
-HL1
-KM12
-KM11
-SB7
-BM1
ABB
E-stop
-SB500
Kryt pásu 1
Sawblade cover 1
Abdeckleiste 1
Kryt pásu 2
Sawblade cover 2
Abdeckleiste 2
+R1-XC1
-WSB500
-WSQ21
-SQ21
-WSQ22
-SQ22
+R1-XC3
Číslo dok./Doc.No/Anzahl der Dokumente:: ES-63200-203-J6.4
Napájení/Power supply/Einspeisung: 3x230V+PE, 50Hz
Zpracoval/Processed /Hat verarbeitet: Kostka
Datum/Date/Datum: 11.4.2016
Listů/Page/Seite: 16
Listů/Pages/Seiten: 24
Název stránky/Name page/Name seiten:
Bezpečnostní okruh / Safety circle / Sicherheitsbereich
Stroj/Machine/Maschine:
Extend 1000.820
BOMAR, s.r.o.
Těžební 1236/1
CZ 627 00, Brno
15

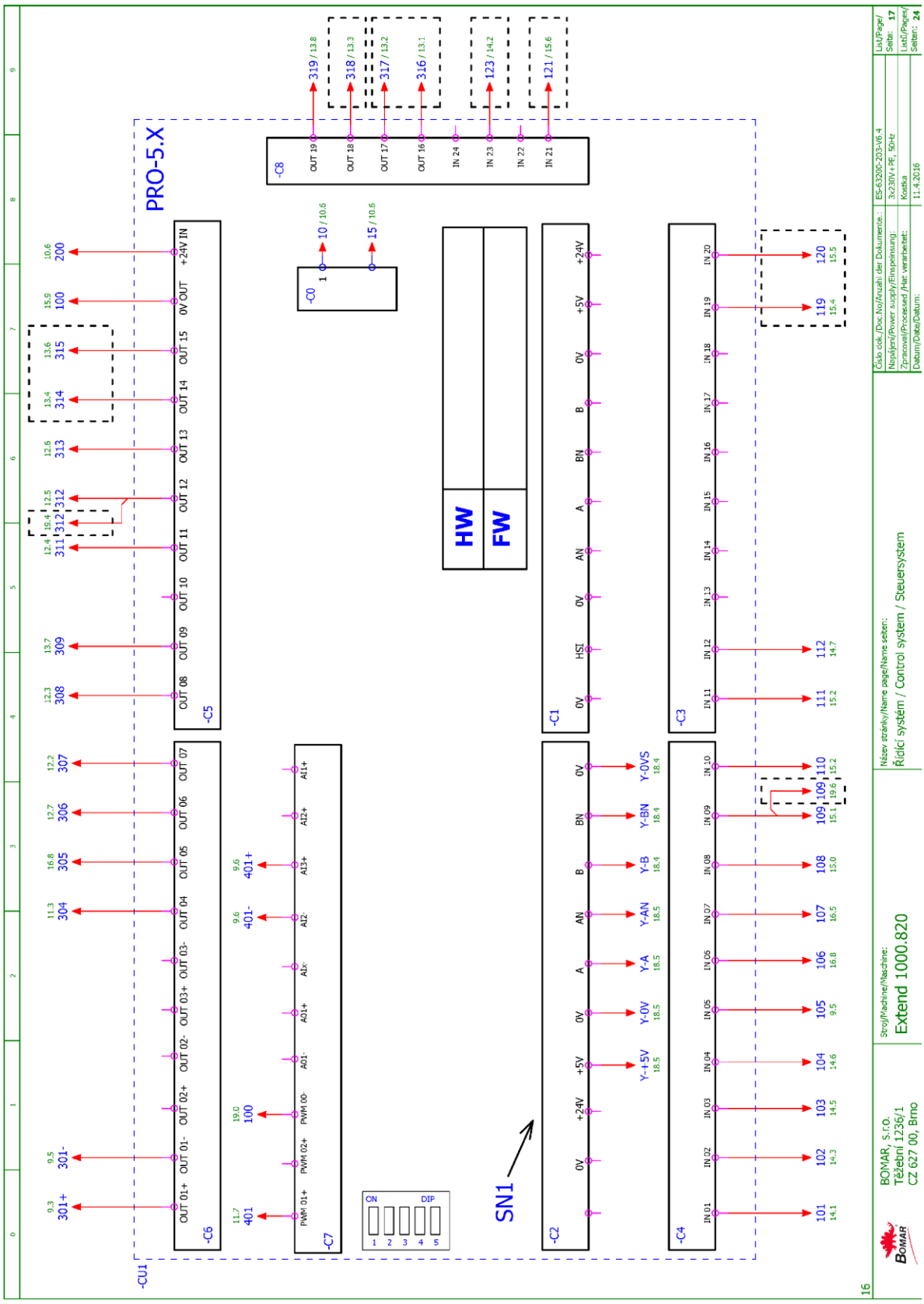
PRO-5.X
-CU1
-C0
-C1
-C2
-C3
-C4
-C5
-C6
-C7
-C8
HW
FW
SN1
ON
DIP
BOMAR, s.r.o.
Těžební 1236/1
CZ 627 00, Brno
Stroj/Machine/Maschine:
Extend 1000.820
Název stránky/Name page/Name seiten:
Řídící systém / Control system / Steuersystem
ES-6320D-203-V6.4
3x230V + PE, 50Hz
Kostka
11.4.2016
List/Page/Seite: 17
List/Pages/Seiten: 24
16

Příslušenství/Accessories/Zubehör

SN1

Snímač výšky ramene Sawframe position sensor Rahmenposition sensor		Kabel HELU-Flexi 7x0.14
+	HNĚDÁ BROWN BRAUN	HNĚDÁ+MODRÁ BROWN+BLUE BRAU+BLAU
-	SEDÁ GREY GRAU	SEDÁ GREY GRAU
A	RUZOVÁ PINK ROSAROT	ŽLUTÁ YELLOW GELB
AN	ZELENÁ GREEN GRÜN	RŮŽOVÁ PINK ROSA
B	ŽLUTÁ YELLOW GELB	BÍLÁ WHITE WEIS
BN	BÍLÁ WHITE WEIS	ZELENÁ GREEN GRÜN
	ČERNÁ BLACK SCHWARZ	STÍNĚNÍ SHIELD LEITUNGSSCHIRM

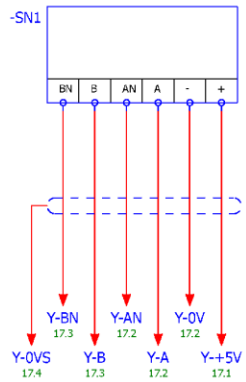

17

BOMAR, s.r.o. Těžební 1236/1 CZ 627 00, Brno	Stroj/Machine/Maschine: Extend 1000.820	Název stránky/Name page/Name seiten: Snímač výšky ramene / Arm height sensor / Arm Höhensensor	Číslo dok./Doc.No/Anzahl der Dokumente.: ES-63200-203-V6.4 Napájení/Power supply/Einspeinsung: 3x230V+PE, 50Hz Zpracoval/Processed /Hat verarbeitet: Kostka Datum/Date/Datum: 16.3.2016	List/Page/Seite: 18 Listů/Pages/Seiten: 24

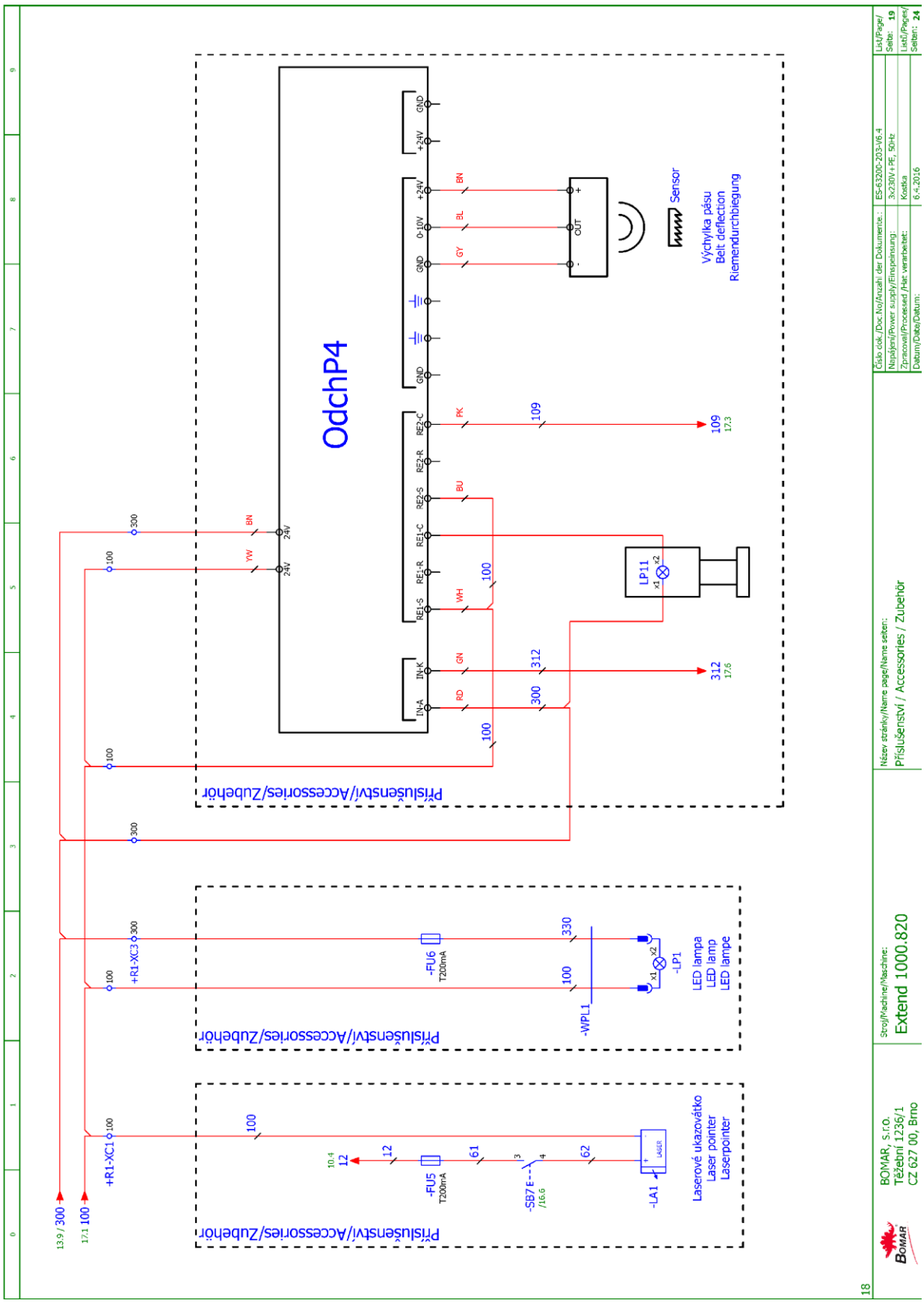
OdchP4
IN-A
IN-K
RE1-S
RE1-R
RE1-C
RE2-S
RE2-R
RE2-C
GND
0-10V
+24V
Sensor
Výchylka pásu
Belt deflection
Riemendurchbiegung
LP11
Laserové ukazovátko
Laser pointer
Laserpointer
-LA1
-SB7E
-FU5
T200mA
-FU6
T200mA
+R1-XC1
+R1-XC3
-WPL1
-LP1
LED lampa
LED lamp
LED lampe
Příslušenství/Accessories/Zubehör
Název stránky/Name page/Name seiten:
Příslušenství / Accessories / Zubehör
Stroj/Machine/Maschine:
Extend 1000.820
BOMAR, s.r.o.
Těžební 1236/1
CZ 627 00, Brno
ES-6320D-203-V6-4
3x230V + PE, 50Hz
Kostka
6.4.2016
Strana/Page/Seite: 19
Listů/Pages/Seiten: 24
18

6.3. Hydraulické schéma / Hydraulikschema / Hydraulic diagram – 1 svěrák / 1 Schr. / 1 Vice

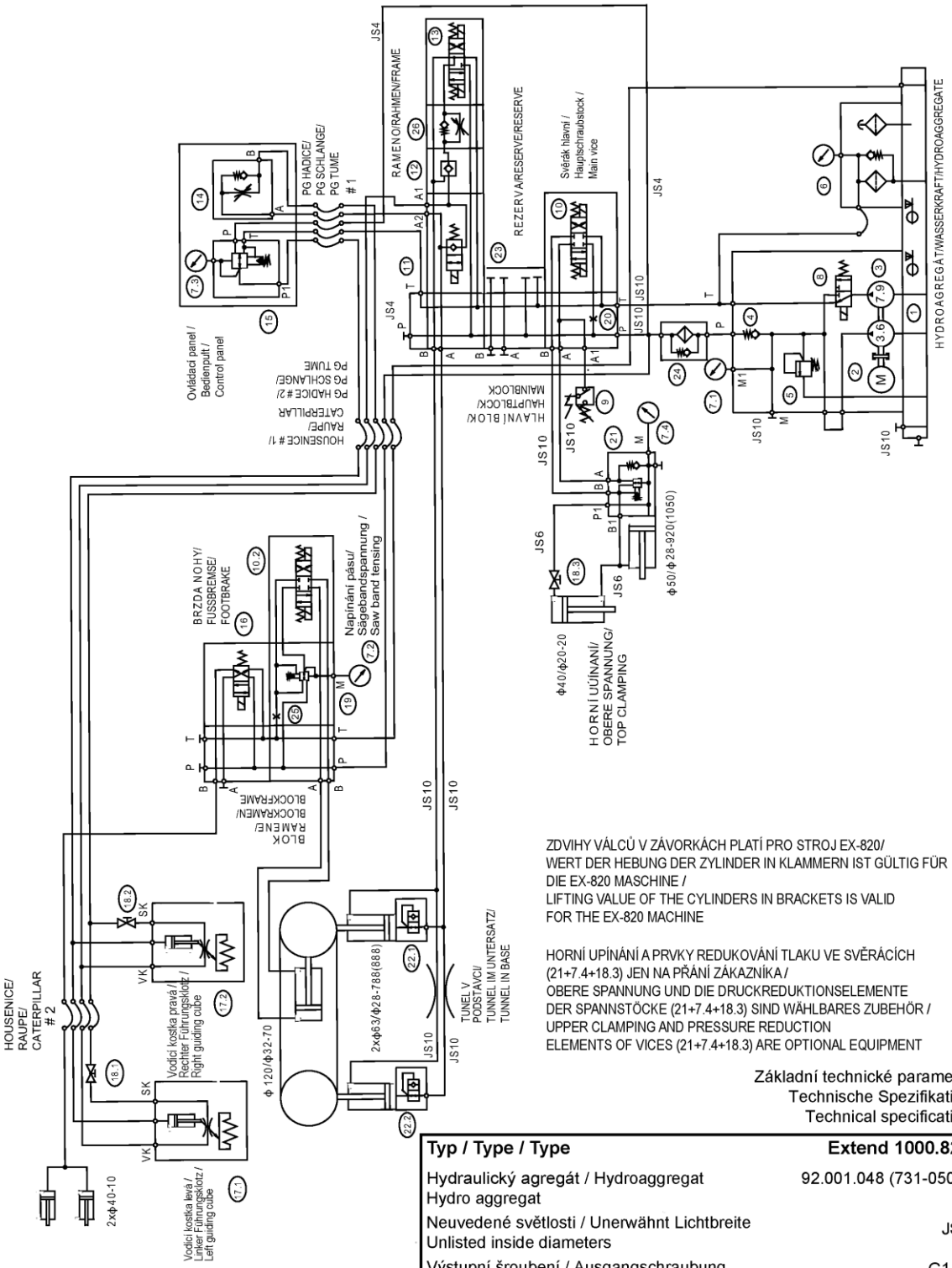

ZDVIHY VÁLCŮ V ZÁVORKÁCH PLATÍ PRO STROJ EX-820/
WERT DER HEBUNG DER ZYLINDER IN KLAMMERN IST GÜLTIG FÜR DIE EX-820 MASCHINE /
LIFTING VALUE OF THE CYLINDERS IN BRACKETS IS VALID FOR THE EX-820 MACHINE

HORNÍ UPÍNÁNÍ A PRVKY REDUKOVÁNÍ TLAKU VE SVĚRÁCÍCH (21+7.4+18.3) JEN NA PŘÁNÍ ZÁKAZNÍKA /
OBERE SPANNUNG UND DIE DRUCKREDUKTIONSELEMENTE DER SPANNSTÖCKE (21+7.4+18.3) SIND WÄHLBARES ZUBEHÖR /
UPPER CLAMPING AND PRESSURE REDUCTION ELEMENTS OF VICES (21+7.4+18.3) ARE OPTIONAL EQUIPMENT

205.6216-000
EXTEND-720
EXTEND 820
11.5.2010

Základní technické parametry
Technische Spezifikation
Technical specification

Typ / Type / Type	Extend 1000.820
Hydraulický agregát / Hydroaggregat Hydro aggregat	92.001.048 (731-0507)
Neuvedené světlosti / Unerwähnt Lichtbreite Unlisted inside diameters	JS6
Výstupní šroubení / Ausgangschraubung Output screewing	G1/4"
p_{max}	6,5 Mpa
Q	10,6+4,9 dm^3/min
n	1425 ot./min
P	2,2 kW

Poz.	Název položky		ks
Pos.	Bezeichnung		Menge
Pos.	Item		Pcs.
1	Nádrž / Behälter / Tank	N30-BO	1
2	Elektromotor / Elektromotor / Electromotor	MA-AL100L 2,2 kW	1
3	Hydrogenerátor / Hydraulikgenerator / Hydrogenerator	P23-7,9/3,6 L65334	1
4	Jednosměrný ventil / Einwegventil / One-way valve	VJ01-06/SG-1	1
5	Přepouštěcí ventil / Bypaßventil / By pass valve	VPN1-06/S-10S	1
6	Zpětný filtr / Filter / Filter	FR 043-166/0 10um	1
7	Manometr / Manometer / Manometer	Ø68 0 s glycerinem/mit glycerin/with glycerin	4(3)
8	Rozváděč / Schaltschrank / Switchboard	SD2E-A3/H2D21	1
9	Tlakový spínač / Druckschalter / Pressure switch 92.201.001	166415031059	1
10	Rozváděč / Schaltschrank / Switchboard	RPE3-043Z11/02400E1K1	1
11	Blok rychloposuvu / Eilgangsblock / Speed shift block	729-0084	1
12	Hydraulický zámek / Hydraulisches Schloß / Hydraulic lock	VJR1-04/MA	1
13	Rozváděč / Schaltschrank / Switchboard	RPE3-043Y11/02400E1K1	1
14	Škrtící ventil / Drosselventil / Throttle-valve	VS01-04/R2,5-0	1
15	Redukční ventil / Reduktionventil /Control valve	VRN2-06/S-6R	1
16	Rozváděč / Schaltschrank / Switchboard	RPE3-042X11/02400E1K1	1
17	Redukční ventil / Reduktionventil /Control valve	VRP2-04/PS-6,9	1
18	Clona/Blende/Shield	Ø1,5	1
19	Redukční ventil / Reduktionventil /Control valve	VRN2-06/S-6R	1(0)
20	Kostka regulace / Regulationklotz /Regulation cube		2
21	Kulový ventil /Kugelventil / Globe valve		3(2)
22	Krycí deska / Schutzplatte / Cover platte	DK 1-04/32-2	1
23	Pojistný ventil / Sicherungventil / Safety valve	VPNH 1/4	2
24	Tlakový filtr / Druckfilter / Pressure filter	D 042-153 (3µm)	1
25	Clona/Blende/Shield	Ø1,2	1
26	Škrtící ventil / Drosselventil / Throttle-valve	VS01-04/ME S	1

6.4. Hydraulické schéma / Hydraulikschema / Hydraulic diagram – 2 svěráky / 2 Schr. / 2 Vices

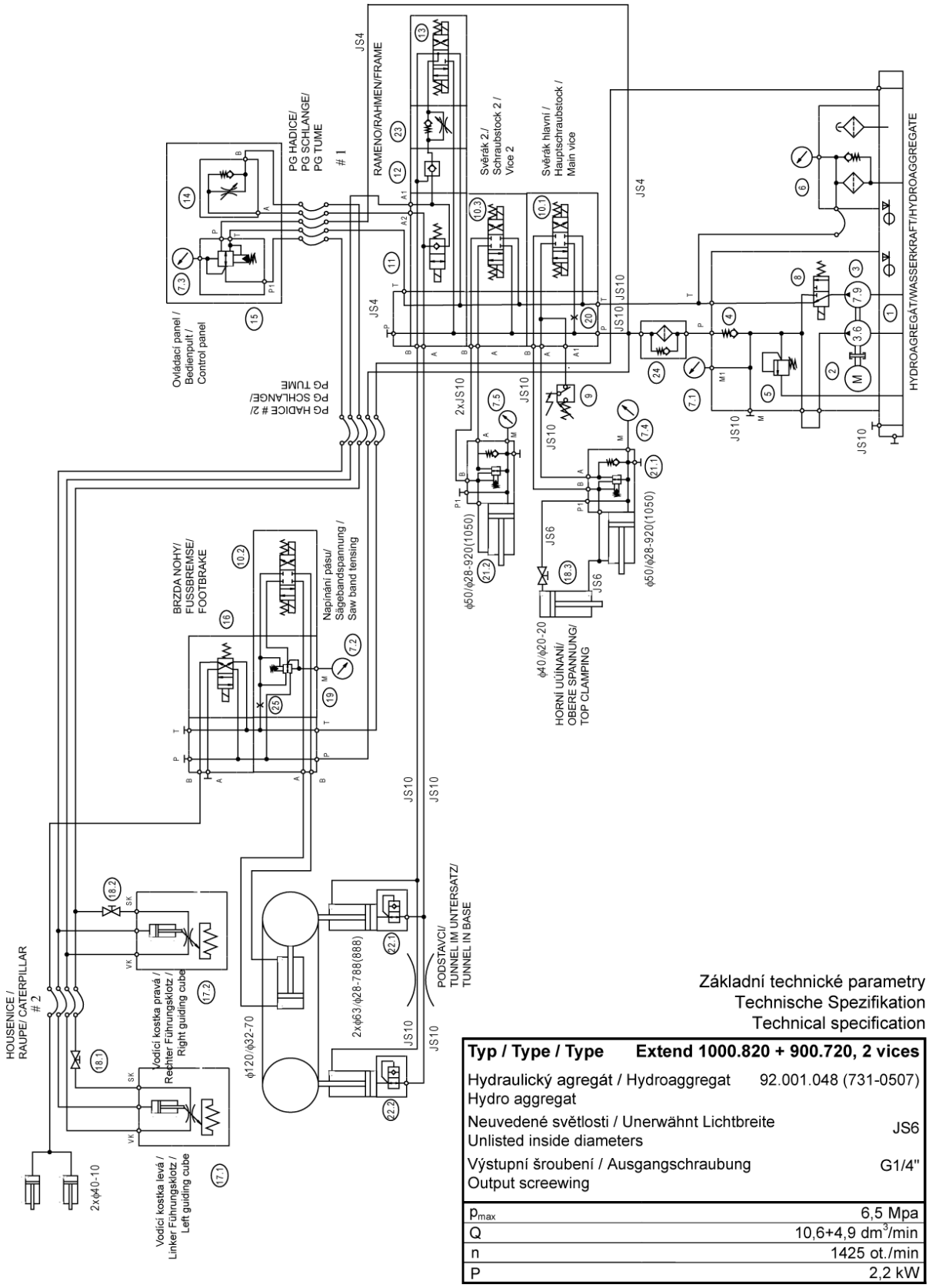

Základní technické parametry
Technische Spezifikation
Technical specification

Typ / Type / Type	Extend 1000.820 + 900.720, 2 vices
Hydraulický agregát / Hydroaggregat Hydro aggregat	92.001.048 (731-0507)
Neuvedené světlosti / Unerwähnt Lichtbreite Unlisted inside diameters	JS6
Výstupní šroubení / Ausgangschraubung Output screewing	G1/4"
p_{max}	6,5 Mpa
Q	10,6+4,9 dm^3/min
n	1425 ot./min
P	2,2 kW

Poz.	Název položky		ks
Pos.	Bezeichnung		Menge
Pos.	Item		Pcs.
1	Nádrž / Behälter / Tank	N30-BO	1
2	Elektromotor / Elektromotor / Electromotor	MA-AL100L 2,2 kW	1
3	Hydrogenerátor / Hydraulikgenerator / Hydrogenerator	P23-7,9/3,6 L65334	1
4	Jednosměrný ventil / Einwegventil / One-way valve	VJ01-06/SG-1	1
5	Přepouštěcí ventil / Bypaßventil / By pass valve	VPN1-06/S-10S	1
6	Zpětný filtr / Filter / Filter	FR 043-166/0 10um	1
7	Manometr / Manometer / Manometer	Ø68 0 s glycerinem/mit glycerin/with glycerin	4(3)
8	Rozváděč / Schaltschrank / Switchboard	SD2E-A3/H2D21	1
9	Tlakový spínač / Druckschalter / Pressure switch 92.201.001	166415031059	1
10	Rozváděč / Schaltschrank / Switchboard	RPE3-043Z11/02400E1K1	1
11	Blok rychloposuvu / Eilgangsblock / Speed shift block	729-0084	1
12	Hydraulický zámek / Hydraulisches Schloß / Hydraulic lock	VJR1-04/MA	1
13	Rozváděč / Schaltschrank / Switchboard	RPE3-043Y11/02400E1K1	1
14	Škrtící ventil / Drosselventil / Throttle-valve	VS01-04/R2,5-0	1
15	Redukční ventil / Reduktionventil /Control valve	VRN2-06/S-6R	1
16	Rozváděč / Schaltschrank / Switchboard	RPE3-042X11/02400E1K1	1
17	Kostka regulace / Regulationklotz / Regulation cube	201.6816-100	2
18	Kulový ventil /Kugelventil / Globe valve		3(2)
19	Redukční ventil / Reduktionventil /Control valve	VRP2-04/PS-6,9	1
20	Clona/Blende/Shield	Ø1,5	1
21	Redukční ventil / Reduktionventil /Control valve	VRN2-06/S-6R	1(0)
22	Pojistný ventil / Sicherungventil / Safety valve	VPNH 1/4	2
23	Škrtící ventil / Drosselventil / Throttle-valve	VS01-04/ME S	1
24	Tlakový filtr / Druckfilter / Pressure filter	D 042-153 (3µm)	1
24	Clona/Blende/Shield		1

7. Výkresy sestav pro objednání náhradních dílů / Zeichnungen für Bestellung der Ersatzteile / Drawing assemblies for spare parts order

Při objednávání náhradních dílů vždy uvádějte: typ stroje (např.Extend 1000.820) , výrobní číslo (např. 125) a rok výroby (např. 1999).

In die Bestellung der Ersatzteile führen Sie immer an: Maschinentyp (z. B. Extend 1000.820), Serien Nr. (z. B. 125) und Baujahr (z. B. 1999).

For spare parts order, you must always to allege: type of machine (for example Extend 1000.820), serial number (for example 125, see cover page) and year of construction (for example 1999).

7.1. Extend 1000.820

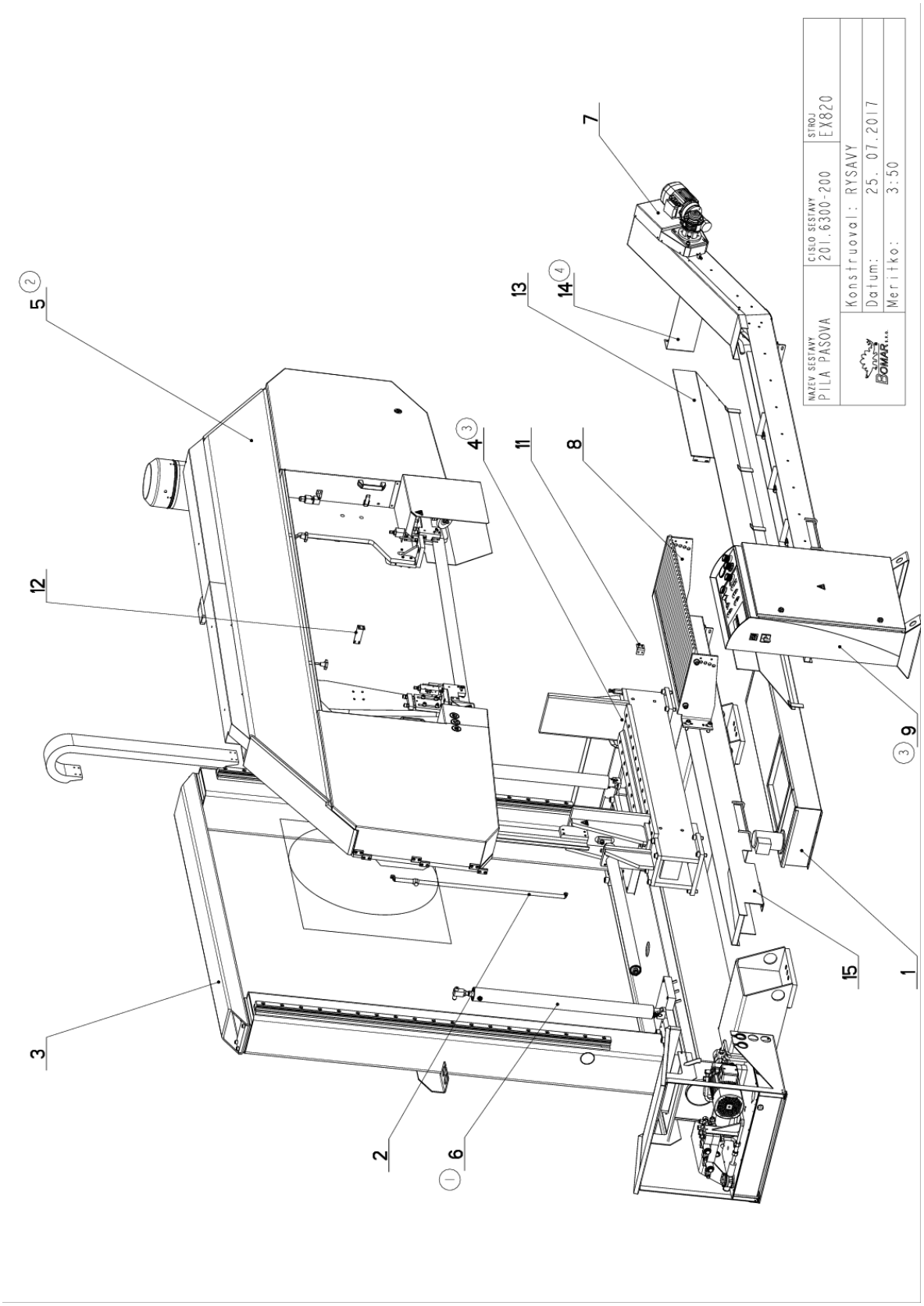

7.2. Kusovník / Piece list / Stückliste - Extend 1000.820

Cislo Sestavy	Ver.	Nazev sestavy
201.6300-200	5	PILA PASOVA/BAND SAW/BANDSÄGE

Poz.	Objednaci cislo	Ver.	Nazev polozky	Rozmer	Ks
1	201.6206-100	1	CHLAZENI / COOLING / KÜHLUNG		1
2	201.6214-020	0	ODMEROVANI / MEASURING / GEHRUNGSMESSUNG		1
3	201.6301-100	2	PODSTAVEC / BASE / UNTERSATZ		1
4	201.6303-150 (3)	0	SVERAK / VICE / SCHRAUBSTOCK		1
5	201.6304-400 (2)	3	RAMENO / SHOULDER / SÄGERAHMEN		1
6	201.6307-600 (1)	3	VALEC ZVEDACI / LIFTING CYLINDER / HEBEZYLINDER		2
7	201.6317-100	2	VYNASEC TRISKOVY / CHIP EXTRACTOR / SPANABFÜHRUNG		1
8	201.6318-100	0	ROST / GRILL / GITTER		1
9	201.Y430-000 (3)	2	OVLADACI PANEL / CONTROL PANEL / BEDIENPULT		1
10	202.6320-000	4	PRISLUSENSTVI / /		1
11	30.6101-111	3	DRZAK / HOLDER / HALTER	P 3x40	1
12	30.6104-006	0	DRZAK / HOLDER / HALTER	P 3x35	1
13	30.6314-154	1	KRYT / COVER / ABDECKUNG		1
14	30.6314-158 (4)	0	KRYT / COVER / ABDECKUNG	P 2x505	1
15	30.6314-280	0	KORYTO / CHANNEL / RINNE		1
16	30.6399-201	4	STITEK TYPOVY / MACHINE LABEL / MASCHINE SCHILD	P 0.5x65	1
17	99.900.039	0	SAMOLEPKA / STICKER / AUFKLEBER	NEBEZP.STLACENI	2
18	99.900.040	0	SAMOLEPKA / STICKER / AUFKLEBER		1
19	99.900.043	0	SAMOLEPKA / STICKER / AUFKLEBER		1
20	99.900.045	0	SAMOLEPKA / STICKER / AUFKLEBER		1
21	99.900.046	0	SAMOLEPKA / STICKER / AUFKLEBER		1
22	99.900.047	0	SAMOLEPKA / STICKER / AUFKLEBER		1
23	99.900.048	0	SAMOLEPKA / STICKER / AUFKLEBER		1
24	99.900.049	0	SAMOLEPKA / STICKER / AUFKLEBER		1
25	99.900.050	0	SAMOLEPKA / STICKER / AUFKLEBER		2
26	99.900.051	0	SAMOLEPKA / STICKER / AUFKLEBER		1
27	99.901.032 (1)	0	SAMOLEPKA / STICKER / AUFKLEBER	CETIFIKACNI SAMOLEPKA	1

201.6316-200 HYDRAULIKA
201.6399-200 SADA SAMOLEPEK

1.ZRUS.VALEC 201.6307-400 A NAHR.201.6307-600,DOPL.CERTIFIKACNI ZNACKA 99.901.032 . 040/ZM226-4 27.8.2010 SLEZACKOVA
2.ZRUS.RAMENO 201.6304-200 A NAHR.201.6304-400. 220/ZM279 12.10.2011 SLEZACKOVA
3.ZRUS.SVERAK 201.6303-100 A NAHR.201.6303-150,ZRUS.ROZVADEC 201.62030-100 A NAHR.201.Y430-000. 002/ZM017 23.1.2012 SLEZACKOVA
4.ZRUSEN KRYT 30.6314-157 A NAHR.30.6314-158. 009/ZM200 31.8.2015 SLEZACKOVA
5.ZRUS.STITEK 31.6399-201 A NAHR.30.6399-201. 095/ZM251 20.7.2017 SLEZACKOVA

Cislo Sestavy/Number of assembly/Nummer der Baugruppe; Verze (Ver.)/Version/Version; Nazev sestavy/Assembly title/Name der Baugruppe; Pozice (Poz.)/Position/Position; Objednaci cislo/Purchase order number/Bestellnummer; Nazev polozky/Volume title/Name der Position; Rozmer/Stock size/Abmessung

7.3. Extend 1000.820

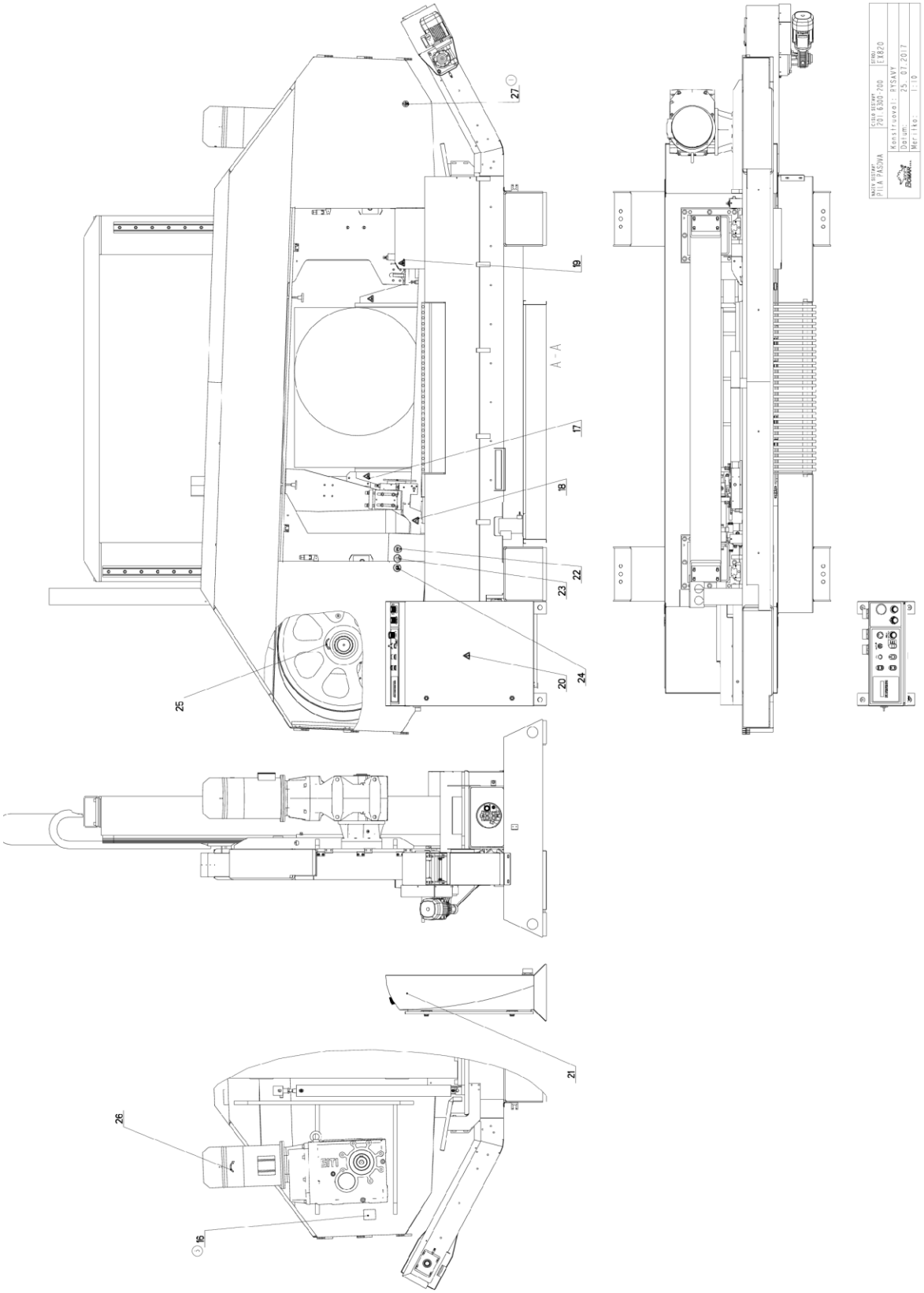

7.4. Kusovník / Piece list / Stückliste - Extend 1000.820

Cislo Sestavy	Ver.	Nazev sestavy
201.6300-200	5	PILA PASOVA/BAND SAW/BANDSÄGE

Poz.	Objednaci cislo	Ver.	Nazev polozky	Rozmer	Ks
1	201.6206-100	1	CHLAZENI / COOLING / KÜHLUNG		1
2	201.6214-020	0	ODMEROVANI / MEASURING / GEHRUNGSMESSUNG		1
3	201.6301-100	2	PODSTAVEC / BASE / UNTERSATZ		1
4	201.6303-150 (3)	0	SVERAK / VICE / SCHRAUBSTOCK		1
5	201.6304-400 (2)	3	RAMENO / SHOULDER / SÄGERAHMEN		1
6	201.6307-600 (1)	3	VALEC ZVEDACI / LIFTING CYLINDER / HEBEZYLINDER		2
7	201.6317-100	2	VYNASEC TRISKOVY / CHIP EXTRACTOR / SPANABFÜHRUNG		1
8	201.6318-100	0	ROST / GRILL / GITTER		1
9	201.Y430-000 (3)	2	OVLADACI PANEL / CONTROL PANEL / BEDIENPULT		1
10	202.6320-000	4	PRISLUSENSTVI / /		1
11	30.6101-111	3	DRZAK / HOLDER / HALTER	P 3x40	1
12	30.6104-006	0	DRZAK / HOLDER / HALTER	P 3x35	1
13	30.6314-154	1	KRYT / COVER / ABDECKUNG		1
14	30.6314-158 (4)	0	KRYT / COVER / ABDECKUNG	P 2x505	1
15	30.6314-280	0	KORYTO / CHANNEL / RINNE		1
16	30.6399-201	4	STITEK TYPOVY / MACHINE LABEL / MASCHINE SCHILD	P 0.5x65	1
17	99.900.039	0	SAMOLEPKA / STICKER / AUFKLEBER	NEBEZP.STLACENI	2
18	99.900.040	0	SAMOLEPKA / STICKER / AUFKLEBER		1
19	99.900.043	0	SAMOLEPKA / STICKER / AUFKLEBER		1
20	99.900.045	0	SAMOLEPKA / STICKER / AUFKLEBER		1
21	99.900.046	0	SAMOLEPKA / STICKER / AUFKLEBER		1
22	99.900.047	0	SAMOLEPKA / STICKER / AUFKLEBER		1
23	99.900.048	0	SAMOLEPKA / STICKER / AUFKLEBER		1
24	99.900.049	0	SAMOLEPKA / STICKER / AUFKLEBER		1
25	99.900.050	0	SAMOLEPKA / STICKER / AUFKLEBER		2
26	99.900.051	0	SAMOLEPKA / STICKER / AUFKLEBER		1
27	99.901.032 (1)	0	SAMOLEPKA / STICKER / AUFKLEBER	CETIFIKACNI SAMOLEPKA	1

201.6316-200 HYDRAULIKA
201.6399-200 SADA SAMOLEPEK

1.ZRUS.VALEC 201.6307-400 A NAHR.201.6307-600,DOPL.CERTIFIKACNI ZNACKA 99.901.032 . 040/ZM226-4 27.8.2010 SLEZACKOVA
2.ZRUS.RAMENO 201.6304-200 A NAHR.201.6304-400. 220/ZM279 12.10.2011 SLEZACKOVA
3.ZRUS.SVERAK 201.6303-100 A NAHR.201.6303-150,ZRUS.ROZVADEC 201.62030-100 A NAHR.201.Y430-000. 002/ZM017 23.1.2012 SLEZACKOVA
4.ZRUSEN KRYT 30.6314-157 A NAHR.30.6314-158. 009/ZM200 31.8.2015 SLEZACKOVA
5.ZRUS.STITEK 31.6399-201 A NAHR.30.6399-201. 095/ZM251 20.7.2017 SLEZACKOVA

Cislo Sestavy/Number of assembly/Nummer der Baugruppe; Verze (Ver.)/Version/Version; Nazev sestavy/Assembly title/Name der Baugruppe; Pozice (Poz.)/Position/Position; Objednaci cislo/Purchase order number/Bestellnummer; Nazev polozky/Volume title/Name der Position; Rozmer/Stock size/Abmessung

7.5. Chlazení / Cooling / Kühlung

Cislo Sestavy
201.6206-100

Ver.
1

Nazev sestavy
CHLAZENI/COOLING/KÜHLUNG

Poz.	Objednaci cislo	Ver.	Nazev polozky	Rozmer	Ks
1	30.6206-101	1	VANA / TANK / WANNE		1
2	30.6206-102	0	PLECH / PLATE / BLECH	P 1.5x186	1
3	30.6206-103	0	KRYT / COVER / ABDECKUNG	P 1.5 - 410	1
4	30.6206-104	0	SITO / SIEVE / GITTERWERK	P 1x387	1
5	91.020.016 (1)	0	CERPADLO / PUMP / PUMPE	4C0A4-14HP1	1
6	94.202.005	0	REDUKCE / REDUCTION / ADAPTOR / REDUKTION	3/4"-6	1

1.ZRUSENO CERPADLO 91.020.009 A NAHR.91.020.016. 009/ZM216 23.9.2015 SLEZACKOVA

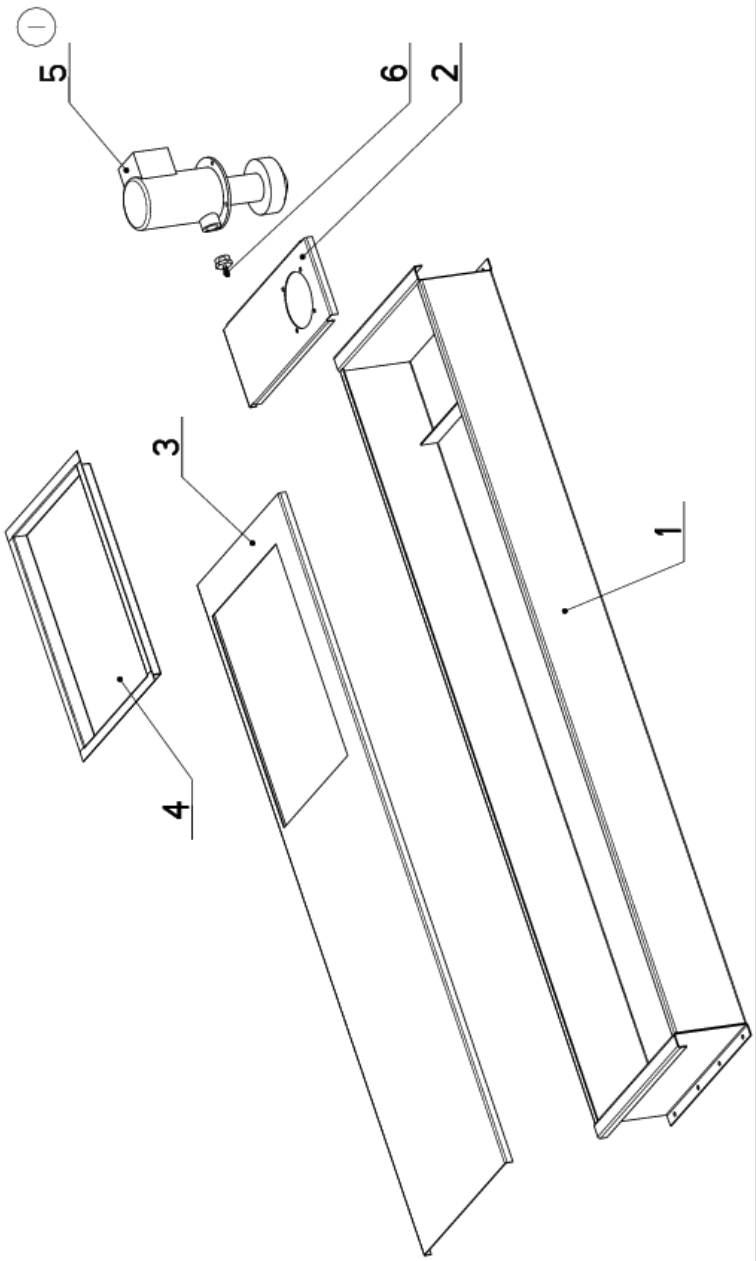

Cislo Sestavy/Number of assembly/Nummer der Baugruppe; Verze (Ver.)/Version/Version; Nazev sestavy/Assembly title/Name der Baugruppe; Pozice (Poz.)/Position/Position;
Objednaci cislo/Purchase order number/Bestellnummer; Nazev polozky/Volume title/Name der Position; Rozmer/Stock size/Abmessung

7.6. Odměřování / Measuring / Gehrungsmessung

Cislo Sestavy	Ver.	Nazev sestavy
201.6214-020	0	ODMEROVANI/MEASURING/GEHRUNGSMESSUNG

Poz.	Objednaci cislo	Ver.	Nazev polozky	Rozmer	Ks
1	30.2014-001	0	OBJIMKA / CLAMP / KLAMMERSTÜCK		1
2	30.6114-023	0	DRZAK / HOLDER / HALTER	P 3x20	2
3	30.6214-021	0	TYC / POLE / STANGE	d 20	1
4	90.001.25.092	0	SROUB IMBUS / ALLEN HEAD BOLT / IMBUSSCHRAUBE	M6X14	4
5	94.007.001	0	SROUB / BOLT / SCHRAUBE	M5x10	1
6	99.120.002	0	PRAVITKO / RULER / SKALENBANDMAß		1

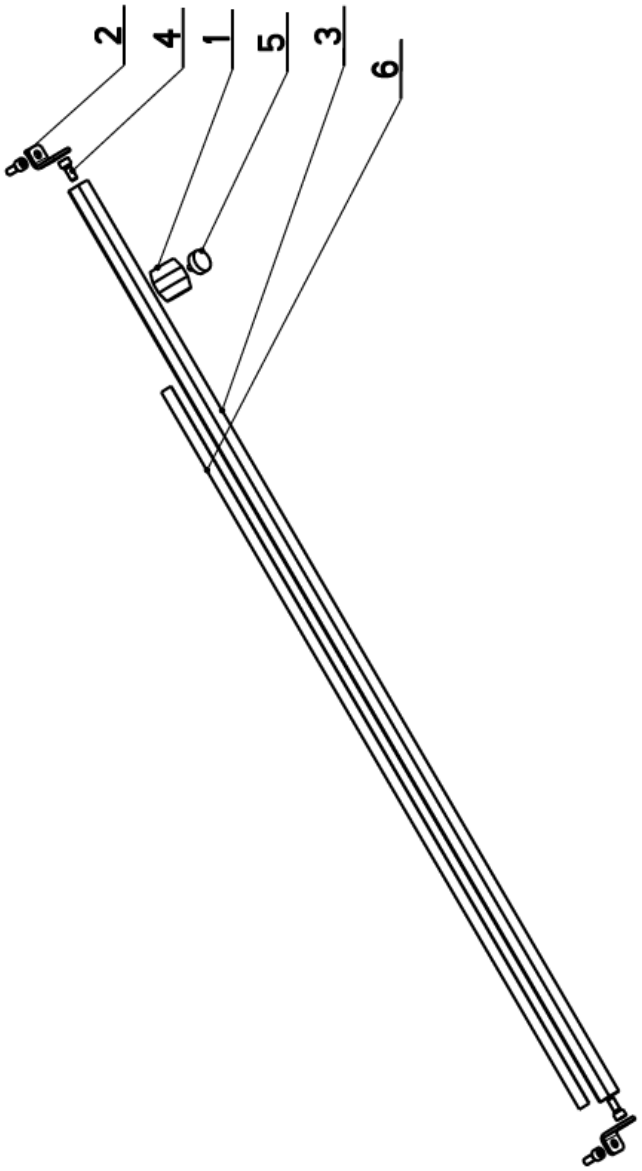

7.7. Podstavec / Base / Untersatz

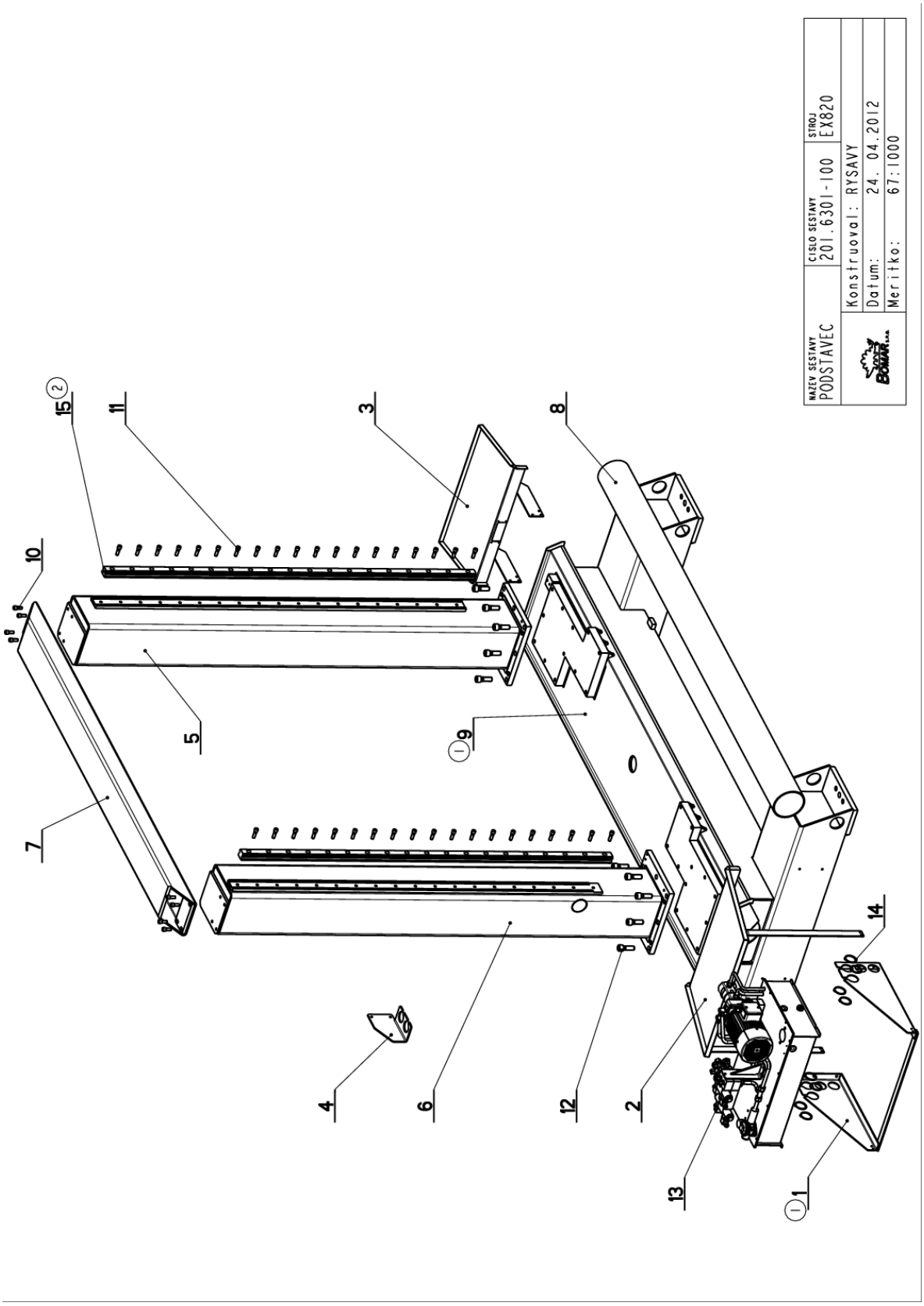

7.8. Kusovník / Piece list / Stückliste - Podstavec / Base / Untersatz

Cislo Sestavy	Ver.	Nazev sestavy
201.6301-100	2	PODSTAVEC/BASE/UNTERSATZ

Poz.	Objednaci cislo	Ver.	Nazev polozky	Rozmer	Ks
1	30.6101-110 (1)	0	DRZAK / HOLDER / HALTER		1
2	30.6114-131	0	OKAP / GUTTER CHANNEL / BLECH		1
3	30.6114-134	0	OKAP / GUTTER CHANNEL / BLECH		1
4	30.6114-136	1	DRZAK / HOLDER / HALTER	P5x210	1
5	30.6301-102	1	SLOUP / POLE / SÄULE		1
6	30.6301-103	2	SLOUP / POLE / SÄULE		1
7	30.6301-104	0	NOSNIK / CARRIER / TRÄGER		1
8	30.6301-105	0	TRUBKA / TUBE / ROHR	D 150	1
9	30.6301-401 (1)	2	PODSTAVEC / /		1
10	90.001.25.058	0	SROUB IMBUS / ALLEN HEAD BOLT / IMBUSSCHRAUBE	M12X30	8
11	90.001.25.060	0	SROUB IMBUS / ALLEN HEAD BOLT / IMBUSSCHRAUBE	M12X40	38
12	90.001.25.114	0	SROUB IMBUS / ALLEN HEAD BOLT / IMBUSSCHRAUBE	M20X60	16
13	92.001.048	0	AGREGAT HYDRAULICKY / HYDRAULIC GENERATOR / HYDRAULIKAGGREGAT		1
14	95.800.019	0	SEGR HRIDEL. / OUTSIDE SAFETY RING / SICHERUNGSRING AUßEN	POJISTNY KROUZEK 52	8
15	99.200.280 (2)	0	VEDENI LINEARNI / LINEAR GUIDE / LINEARE FUHRUNG	MSA 45R 1965 37.5/37.5N	2

1.ZRUS.PODSTAVEC 30.6301-101 A NAHR.30.6301-401,ZRUS.SOUC.30.6101-105,30.6101-106,30.6101-108 A NAHR.30.6101-110. 358,031/226-4 27.8.2010 SLEZACKOVA

2.ZRUS.LINVEDENI 99.200.074(HIWIN) A NAHR.99.200.280(PMI). 056/ZM136 SLEZACKOVA

Cislo Sestavy/Number of assembly/Nummer der Baugruppe; Verze (Ver.)/Version/Version; Nazev sestavy/Assembly title/Name der Baugruppe; Pozice (Poz.)/Position/Position; Objednaci cislo/Purchase order number/Bestellnummer; Nazev polozky/Volume title/Name der Position; Rozmer/Stock size/Abmessung

7.9. Svěrák / Vice / Schraubstock

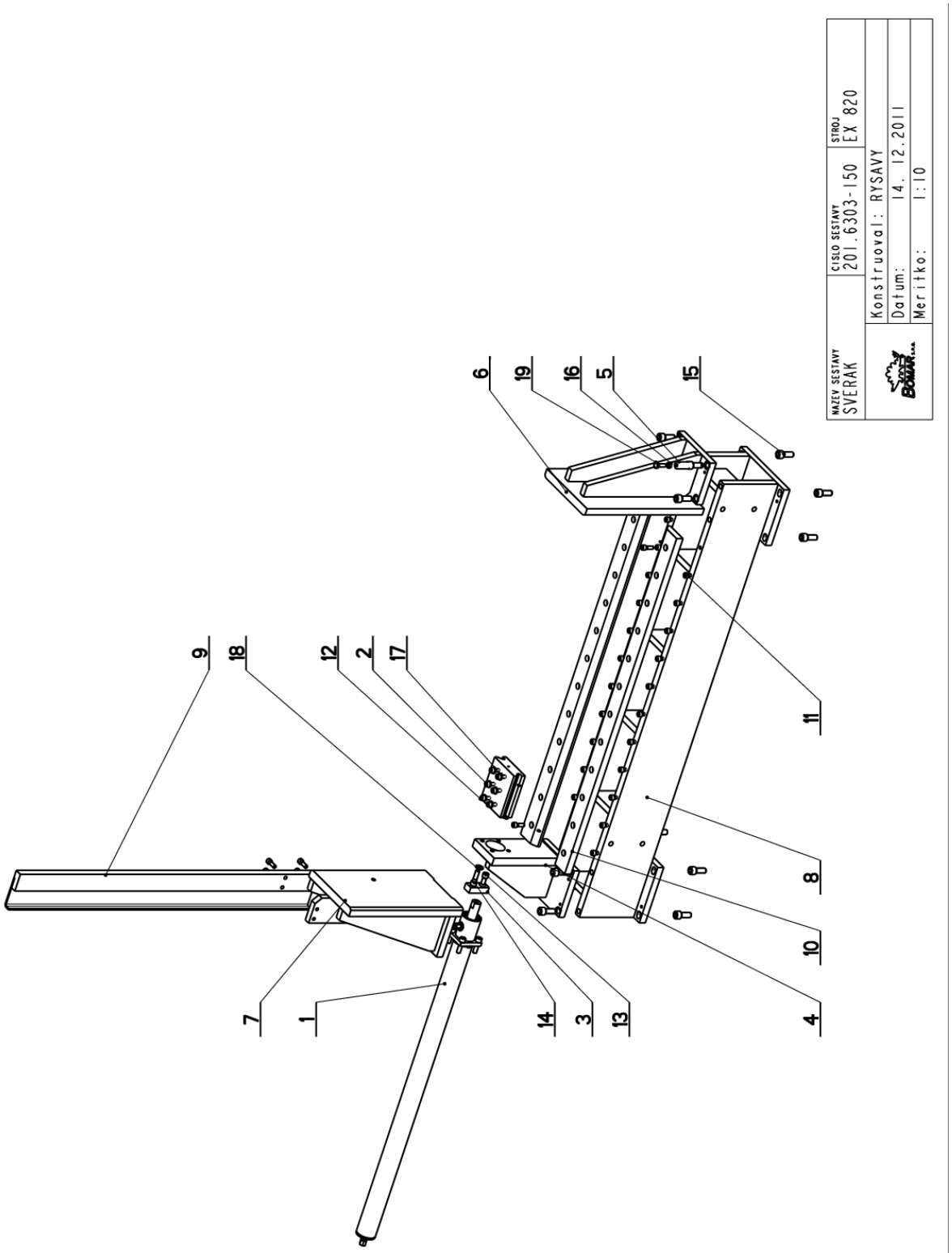

7.10. Kusovník / Piece list / Stückliste - Svěrák / Vice / Schraubstock

Cislo Sestavy	Ver.	Nazev sestavy
201.6303-150	0	SVERAK/VICE/SCHRAUBSTOCK

Poz.	Objednaci cislo	Ver.	Nazev polozky	Rozmer	Ks
1	201.6307-200	0	VALEC SVERAKU / VICE CYLINDER / SCHRAUBSTOCKZYLINDER		1
2	30.6003-552	0	KLUZAK / GLIDER / GLEITER	HR 130x50	1
3	30.6103-005	0	DRZAK / HOLDER / HALTER	HR 30x20	1
4	30.6203-108	0	KONZOLA / CONSOLE / KONSOLE		1
5	30.6203-111	0	DORAZ / STOP PIECE / ANSCHLAG	TYC 6HR 22	1
6	30.6303-001	0	CELIST / JAW / BACKE		1
7	30.6303-108	3	CELIST POHYBLIVA / MOVING JAW / BEWEGLICHE BACKE		1
8	30.6303-109	2	PODSTAVEC SVERAKU / VICE BASE / SCHRAUBSTOCKUNTERSATZ		1
9	30.6303-110	0	LISTA / TRIM / LEISTE		1
10	30.6303-151	0	LISTA SVERAKU / VICE TRIM / SCHRAUBSTOCKLEISTE	HR 82x27	2
11	90.001.25.048	0	SROUB IMBUS / ALLEN HEAD BOLT / IMBUSSCHRAUBE	M10X30	28
12	90.001.25.054	0	SROUB IMBUS / ALLEN HEAD BOLT / IMBUSSCHRAUBE	M10X60	6
13	90.001.25.057	0	SROUB IMBUS CERNENY / ALLEN HEAD BOLT / IMBUSSCHRAUBE	M12x25	1
14	90.001.25.060	0	SROUB IMBUS / ALLEN HEAD BOLT / IMBUSSCHRAUBE	M12X40	1
15	90.001.25.086	0	SROUB IMBUS / ALLEN HEAD BOLT / IMBUSSCHRAUBE	M16X40	16
16	90.100.55.006	0	MATICE / NUT / MUTTER	MATICE _ M10	1
17	90.150.50.006	0	PODLOZKA / WASHER / UNTERLEGSCHEIBE	PODLOZKA 10,5	6
18	90.150.50.007	0	PODLOZKA / WASHER / UNTERLEGSCHEIBE	PODLOZKA 13	1
19	90.401.02.002	0	SROUB 6HRANNY / 6 SIDED BOLT / SECHSKANTSCHRAUBE	SROUB M10X30	1

Cislo Sestavy/Number of assembly/Nummer der Baugruppe; Verze (Ver.)/Version/Version; Nazev sestavy/Assembly title/Name der Baugruppe; Pozice (Poz.)/Position/Position; Objednaci cislo/Purchase order number/Bestellnummer; Nazev polozky/Volume title/Name der Position; Rozmer/Stock size/Abmessung

7.11. Válec svěráku / Vice cylinder / Schraubstockzylinder

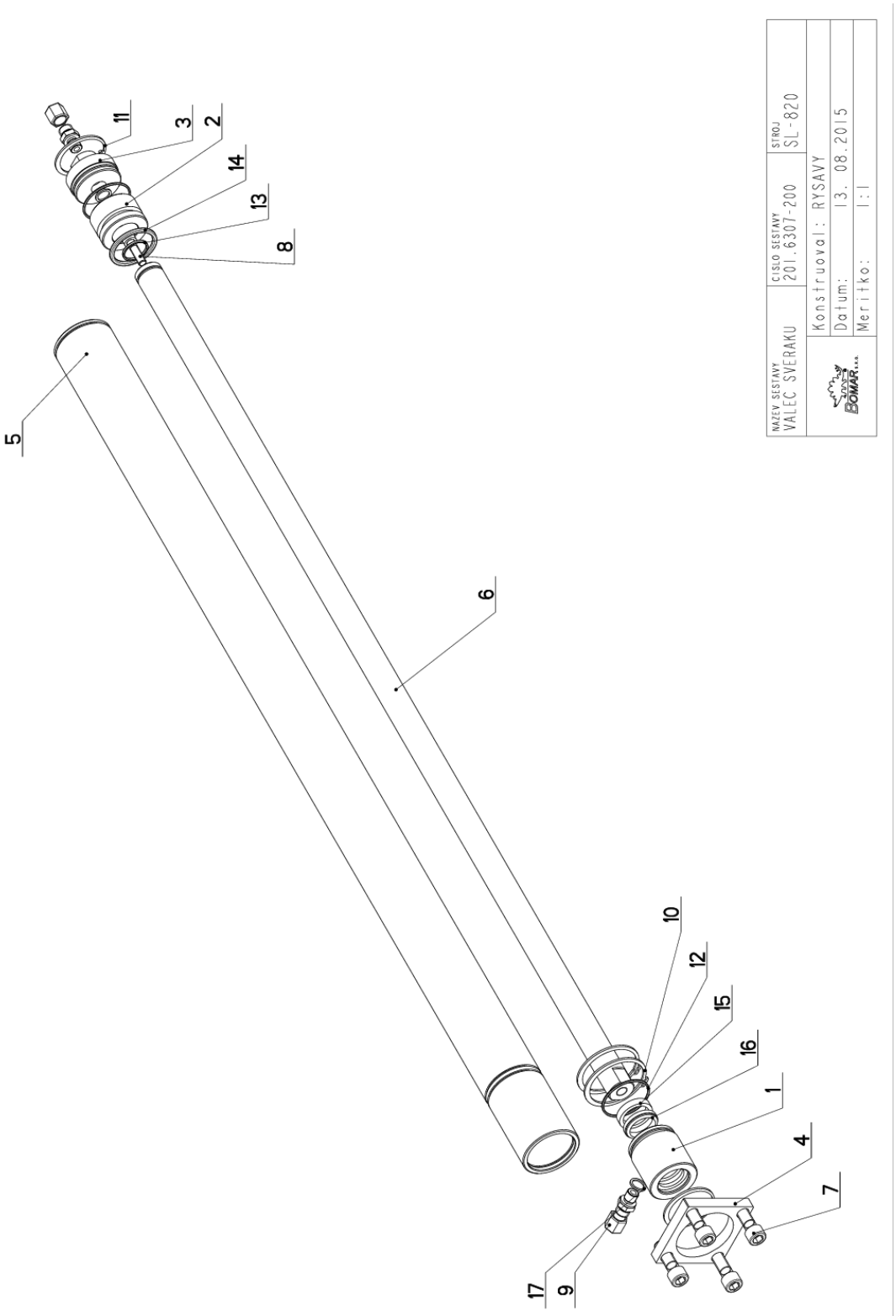

7.12. Kusovník / Piece list / Stückliste - Válec svěráku / Vice cylinder / Schraubstockzylinder

Cislo Sestavy	Ver.	Nazev sestavy
201.6307-200	0	VALEC SVERAKU/VICE CYLINDER/SCHRAUBSTOCKZYLINDER

Poz.	Objednaci cislo	Ver.	Nazev polozky	Rozmer	Ks
1	30.1807-104	2	VIKO / COVER / DECKEL	TYC 55	1
2	30.2007-302	0	PIST / PISTON / KOLBEN	d 55	1
3	30.2007-304	1	VIKO / COVER / DECKEL	d 55	1
4	30.6007-107	0	PRILOZKA / STRAP / LASCHE	HR 80x12	1
5	30.6307-201	0	VALEC SVERAKU / VICE CYLINDER / SCHRAUBSTOCKZYLINDER	TRUBKA 62/50	1
6	30.6307-202	1	PISTNICE / PISTON ROD / KOLBENSTANGE	D 28	1
7	90.001.25.060	0	SROUB IMBUS / ALLEN HEAD BOLT / IMBUSSCHRAUBE	M12X40	4
8	90.001.25.083	0	SROUB IMBUS / ALLEN HEAD BOLT / IMBUSSCHRAUBE	M8X30	1
9	92.002.101	0	SROUBENI PRIME / DIRECT BOLTING / GERADE VERSCHRAUBUNG		2
10	95.800.021	0	SEGR HRIDEL. / OUTSIDE SAFETY RING / SICHERUNGSRING AUSSEN	POJISTNY KROUZEK 62	2
11	95.801.009	0	SEGR DIRA / OUTSIDE SAFETY RING / SICHERUNGSRING AUSSEN	POJISTNY KROUZEK 52	2
12	96.001.013	0	O-KROUZEK STATIC / STATIC O RING / O-RING STATISCH	45X2	2
13	96.002.011	0	KROUZEK O DYNAMICKY / DYNAMIC O RING / O-RING DYNAMISCH	24X2	1
14	96.020.005	0	KROUZEK TESNICI / SEAL RING / DICHTUNGSRING	39.2X5.33	1
15	96.041.003	0	TESNENI / SEALING / DICHTUNG	601-28x36x7.1	1
16	96.060.003	0	KROUZEK STIRACI / SCRAPER RING / ABSTREIFRING	KROUZEK STIRACI 28	1
17	96.082.002	0	TESNENI / SEAL RING / DICHTUNGSRING	13/17x1.5 CU	2

Cislo Sestavy/Number of assembly/Nummer der Baugruppe; Verze (Ver.)/Version/Version; Nazev sestavy/Assembly title/Name der Baugruppe; Pozice (Poz.)/Position/Position; Objednaci cislo/Purchase order number/Bestellnummer; Nazev polozky/Volume title/Name der Position; Rozmer/Stock size/Abmessung

7.13. Rameno / Shoulder / Sägerahmen

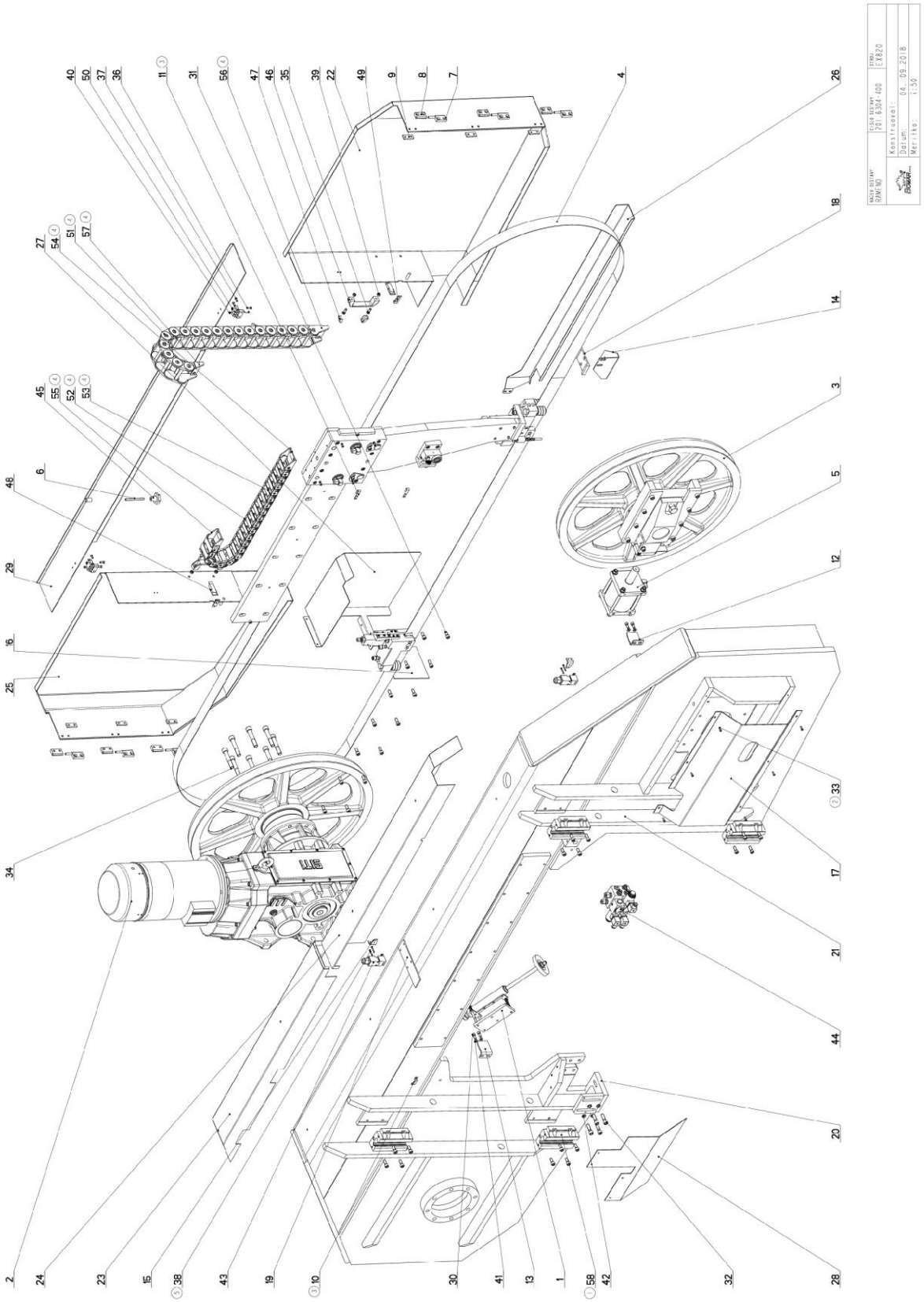

7.14. Kusovník / Piece list / Stückliste - Rameno / Shoulder / Sägerahmen

Cislo Sestavy	Ver.	Nazev sestavy
201.6304-400	5	RAMENO/SHOULDER/SÄGERAHMEN

Poz.	Objednaci cislo	Ver.	Nazev polozky	Rozmer	Ks
1	201.6214-250	1	KARTAC / BRUSH / BÜRSTE		1
2	201.6305-300	1	POHON / DRIVE / ANTRIEB		1
3	201.6308-100	2	NAPINANI / TENSIONING / SPANNUNG		1
4	201.6310-050	6	VEDENI PASU / BELT GUIDE / SÄGEBANDFÜHRUNG		1
5	201.6707-400	3	VALEC NAPINACI / TENSIONING CYLINDER / SPANNZYLINDER		1
6	30.0203-005	0	SROUB / BOLT / SCHRAUBE	M8	2
7	30.6014-109	1	PANT / HINGE / TÜRBAND		6
8	30.6014-110	1	PANT / HINGE / TÜRBAND	HR 30x12	6
9	30.6014-111	0	DESKA / BOARD / PLATTE	HR 20x6	6
10	30.6014-456 (3)	1	DRZAK / HOLDER / HALTER	P 1x12	1
11	30.6014-457 (3)	1	DRZAK / HOLDER / HALTER	P 1x12	2
12	30.6114-123	0	DRZAK / HOLDER / HALTER	P 4x55	1
13	30.6114-124	1	DRZAK / HOLDER / HALTER	P 4x55	1
14	30.6114-146	2	DRZAK / HOLDER / HALTER	P 3x150	1
15	30.6114-147	0	DRZAK / HOLDER / HALTER	P 3x30x60	2
16	30.6114-160	0	CLONA / CURTAIN / SCHÜRZE	2x180	1
17	30.6214-119	1	KRYT NAPINANI / TENSIONING COVER / BANDSPANNUNGSABDECKUNG	P 3x507	1
18	30.6214-124	0	KLUZAK / GLIDER / GLEITER	TYC 50x60 natur	1
19	30.6214-138	0	DRZAK / HOLDER / HALTER	P 4x60	1
20	30.6304-003	1	DRZAK / HOLDER / HALTER		1
21	30.6304-201	1	RAMENO / SAW ARM / SAGERAHMEN		1
22	30.6314-111	1	DVERE / DOOR / TÜR		1
23	30.6314-112	0	KRYT RAMENE / SHOULDER COVER / RAHMENABDECKUNG		1
24	30.6314-113	1	KRYT RAMENE / SHOULDER COVER / RAHMENABDECKUNG	P 1,5- 324	1
25	30.6314-114	1	DVERE / DOOR / TÜR		1
26	30.6314-132	1	KRYT PASU / /	P 2x209	1
27	30.6314-151	0	KRYT KARTACKU / BRUSH COVER / BÜRSTENABDECKUNG	P 2x618	1
28	30.6314-152	0	KRYT / COVER / ABDECKUNG	P 2x 490	1
29	30.6314-203	1	KRYT RAMENE / SHOULDER COVER / RAHMENABDECKUNG		1
30	90.001.25.032	0	SROUB IMBUS / ALLEN HEAD BOLT / IMBUSSCHRAUBE	8x20	4
31	90.001.25.047	0	SROUB IMBUS / ALLEN HEAD BOLT / IMBUSSCHRAUBE	M10X25	30
32	90.001.25.060	0	SROUB IMBUS / ALLEN HEAD BOLT / IMBUSSCHRAUBE	M12X40	4
33	90.001.25.087 (2)	0	SROUB IMBUS / ALLEN HEAD BOLT / IMBUSSCHRAUBE	M5X14	6
34	90.001.25.101	0	SROUB IMBUS / ALLEN HEAD BOLT / IMBUSSCHRAUBE	M16X90	8

Cislo Sestavy/Number of assembly/Nummer der Baugruppe; Verze (Ver.)/Version/Version; Nazev sestavy/Assembly title/Name der Baugruppe; Pozice (Poz.)/Position/Position; Objednaci cislo/Purchase order number/Bestellnummer; Nazev polozky/Volume title/Name der Position; Rozmer/Stock size/Abmessung

7.15. Rameno / Shoulder / Sägerahmen

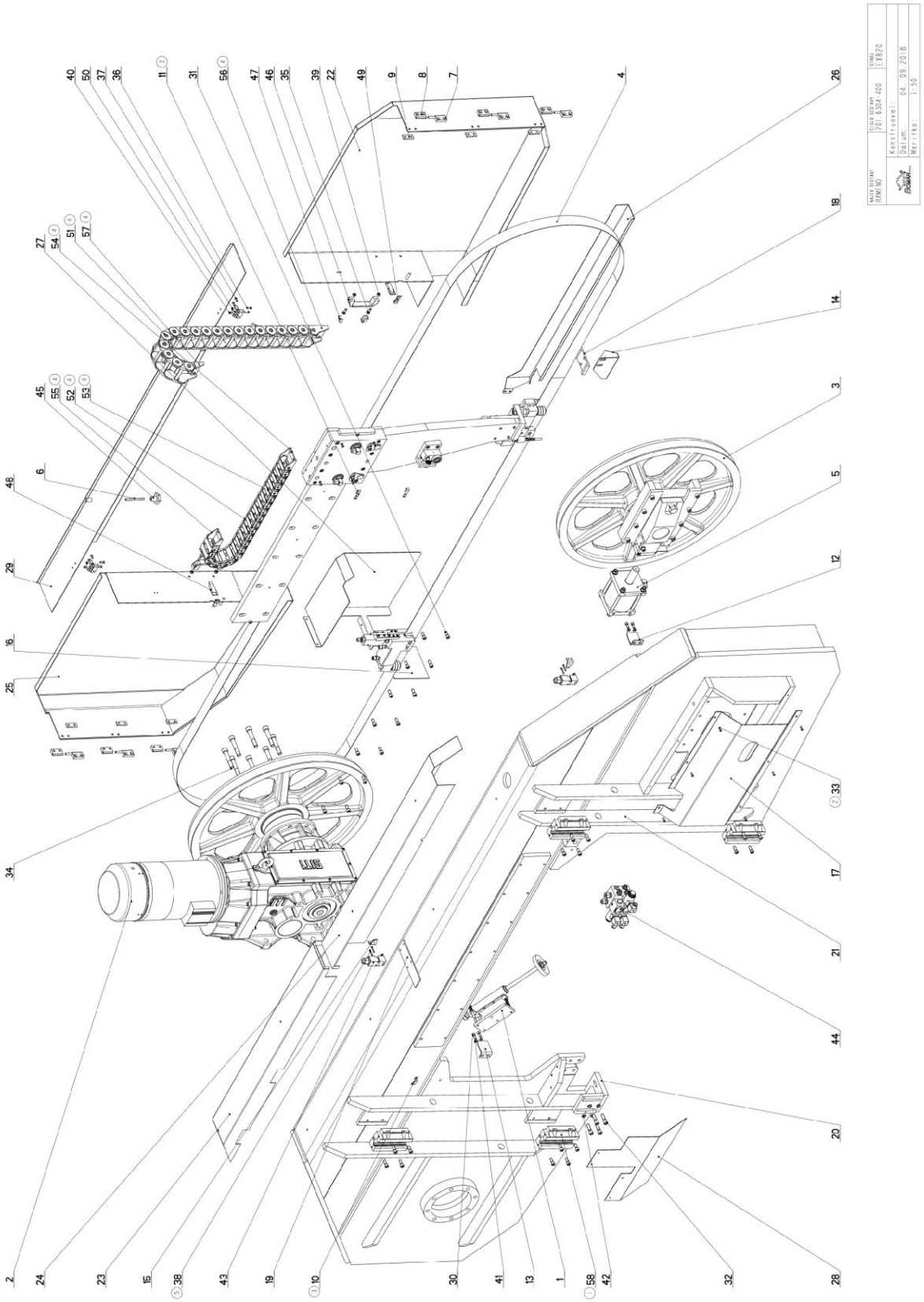

7.16. Kusovník / Piece list / Stückliste - Rameno / Shoulder / Sägerahmen

35	90.005.55.016	0	SROUB / BOLT / SCHRAUBE	M8x25	4
36	90.011.27.006	0	ZAPUSTNY IMBUS / COUNTERSINK BOLT / SENKSCHRAUBE	SROUB M6X20	4
37	90.011.27.017	0	ZAPUSTNY IMBUS / COUNTERSINK BOLT / SENKSCHRAUBE	SROUB M6X16	4
38	90.013.92.104 (5)	0	SROUB PULKULATY / HALF ROUND BOLT / HALBRUNDSCHRAUBE	M4x30	4
39	90.100.55.005	0	MATICE / NUT / MUTTER	MATICE _ M8	4
40	90.101.55.008	0	MATICE / NUT / MUTTER	MATICE M6	4
41	90.150.50.005	0	PODLOZKA / WASHER / UNTERLEGSCHEIBE	A 8	4
42	90.163.00.003	0	PODLOZKA / WASHER / UNTERLEGSCHEIBE	NORD-LOCK	4
43	91.173.012	0	SPINAC KONCOVY / END SWITCH / ENDSCHALTER	QKS8-2xNC	2
44	92.153.048	0	BLOK / BLOCK / BLOCK	881-0027*RAMENO	1
45	94.003.001	0	HLAVICE / HEAD / KOPF		2
46	94.012.001	0	RUKOJET / HANDLE / GRIFF		2
47	94.012.002	0	KRYT / COVER / ABDECKUNG		4
48	99.100.003	0	ZAMEK / LOCK / SCHLOSS		2
49	99.100.004	0	ZAMEK / LOCK / SCHLOSS	D13-00	2
50	99.100.007	0	PANT / HINGE / TÜRBAND		2
51	99.170.001 (4)	0	RETEZ ENERGII / ENERGY BELT / ENERGIEKETTE	36x75, R100	18
52	99.170.069 (4)	0	RETEZ ENERGII / ENERGY BELT / ENERGIEKETTE	MP 3002.5 R 095	20
53	99.170.070 (4)	0	RETEZ ENERGII / ENERGY BELT / ENERGIEKETTE	DE 3002.5	20
54	99.171.013 (4)	0	KONCOVKA / END / ENDSTÜCK		1
55	99.171.014 (4)	0	KONCOVKA / END / ENDSTÜCK		1
56	99.173.001 (4)	0	RETEZ ENERGII / ENERGY BELT / ENERGIEKETTE	36x75, R100	1
57	99.173.002 (4)	0	RETEZ ENERGII / ENERGY BELT / ENERGIEKETTE	36x75, R100	1
58	99.201.059 (1)	0	VOZIK LINEARNIHO VEDENI / LINEAR GUIDE CART / LINEARFUHRUNGSWAGEN	MSA45LE SS F0 N	4

1.ZRUS.VOZIK LINEARNIHO VEDENI 99.201.013(HIWIN) A NAHR.99.201.059(PMI). 056/ZM136 24.4.2012 SLEZACKOVA
2.PRIDAN 6xSROUB M5x14. 176/ZM210 13.10.2014 SLEZACKOVA
3.PRIDAN 1xDRZAK 30.6014-456,30.2xDRZAK 30.6014-457. 220/ZM245 12.12.2014 SLEZACKOVA
4.ZRUS.99.170.021, 99.171.040, 99.171.039; NAHR.20x99.170.069;20x99.170.070; 99.170.013; 99.170.014; 99.173.001; 99.173.002
096/ZM183 05.06.2018 SCERBA
5.PRID. 4xSROUB M4x30 90.013.92.104. 171/ZM308 4.9.2018 SZABARI

Cislo Sestavy/Number of assembly/Nummer der Baugruppe; Verze (Ver.)/Version/Version; Nazev sestavy/Assembly title/Name der Baugruppe; Pozice (Poz.)/Position/Position;
Objednaci cislo/Purchase order number/Bestellnummer; Nazev polozky/Volume title/Name der Position; Rozmer/Stock size/Abmessung

7.17. Kartáč / Brush / Bürste

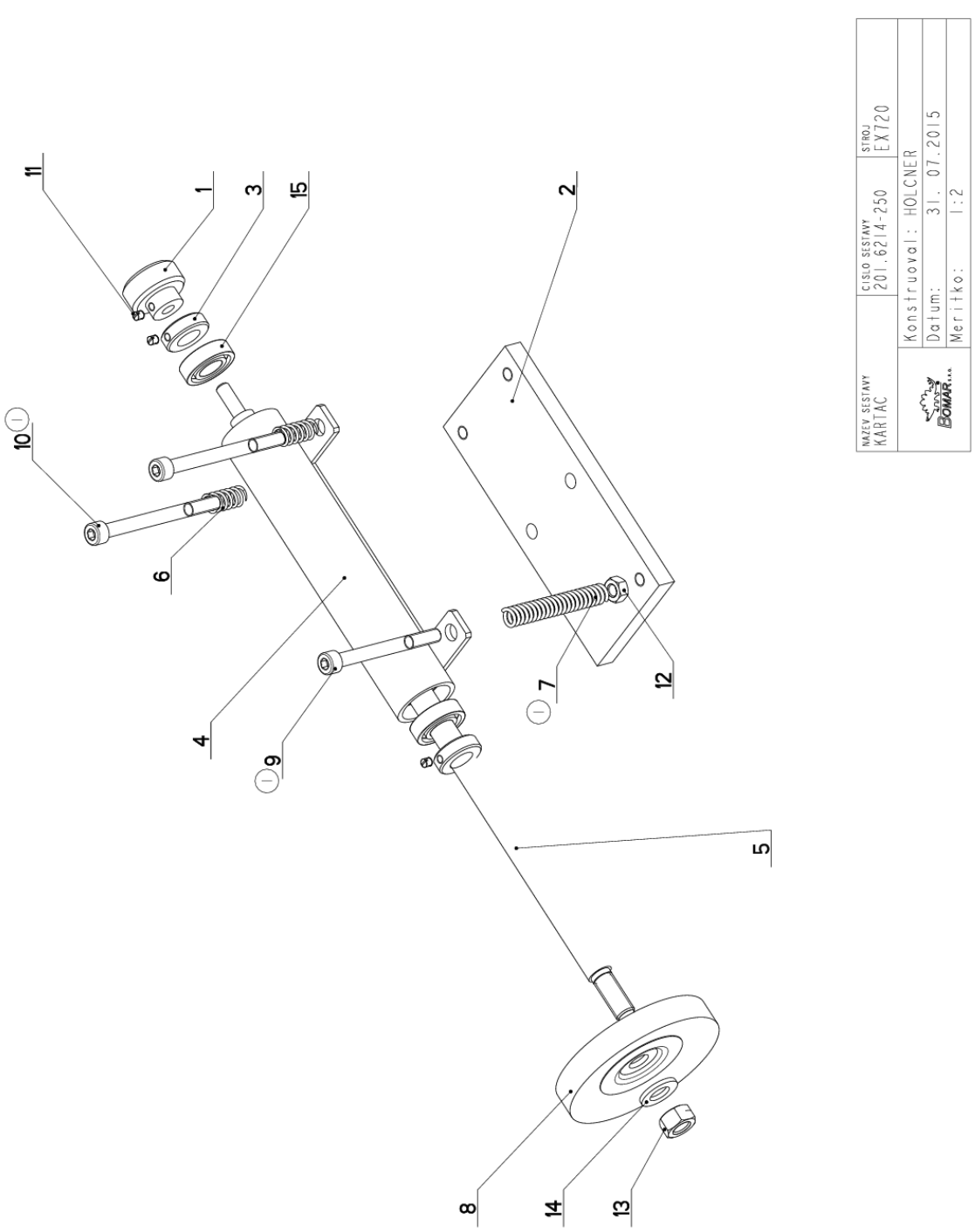

7.18. Kusovník / Piece list / Stückliste - Kartáč / Brush / Bürste

Cislo Sestavy	Ver.	Nazev sestavy
201.6214-250	1	KARTAC/BRUSH/BÜRSTE

Poz.	Objednaci cislo	Ver.	Nazev polozky	Rozmer	Ks
1	201.0814-204	0	KOLECKO / WHEEL / ROLLE	SESTAVA	1
2	30.6114-105	1	DESKA / BOARD / PLATTE	HR 80x12	1
3	30.6114-119	0	KROUZEK / RING / RING	d 28	2
4	30.6114-128	2	DRZAK / HOLDER / HALTER		1
5	30.6214-251	0	HRIDEL / SHAFT / WELLE	D 15	1
6	31.1506-115	0	PRUZINA / SPRING / FEDER	1.6x12x25x7.5	2
7	31.2107-207 (1)	0	PRUZINA / SPRING / FEDER	2x12x74x22,5	1
8	49.250.017	0	KARTAC / BRUSH / BÜRSTE	SPB 100x12	1
9	90.001.25.067 (1)	0	SROUB IMBUS / ALLEN HEAD BOLT / IMBUSSCHRAUBE	M8X80	1
10	90.001.25.078 (1)	0	SROUB IMBUS / ALLEN HEAD BOLT / IMBUSSCHRAUBE	M8X90	2
11	90.002.20.003	0	SROUB STAVECI / ADJUSTMENT BOLT / STELLSCHRAUBE	SROUB M5X6	3
12	90.100.55.005	0	MATICE / NUT / MUTTER	MATICE _ M8	1
13	90.100.55.007	0	MATICE / NUT / MUTTER	MATICE _ M12	1
14	90.150.50.007	0	PODLOZKA / WASHER / UNTERLEGSCHEIBE	PODLOZKA 13	1
15	95.001.006	0	LOZISKO / BEARING / LAGER	6002 2RS	2

1.ZRUS.SROUB M8x70(90.001.25.095) NAHR.M8x80(90.001.25.067), ZRUS.SROUB M8x80(90.001.25.067) NAHR. M8x90(90.001.25.078), ZRUS.PRUZINA 31.2107-206 NAHR. PRUZINOU 31.2107-207. 134/ZM192 SLEZACKOVA

Cislo Sestavy/Number of assembly/Nummer der Baugruppe; Verze (Ver.)/Version/Version; Nazev sestavy/Assembly title/Name der Baugruppe; Pozice (Poz.)/Position/Position; Objednaci cislo/Purchase order number/Bestellnummer; Nazev polozky/Volume title/Name der Position; Rozmer/Stock size/Abmessung

7.19. Kolečko / Wheel / Rolle

Cislo Sestavy
201.0814-204

Ver.
0

Nazev sestavy
KOLECKO/WHEEL/ROLLE

Poz.	Objednaci cislo	Ver.	Nazev polozky	Rozmer	Ks
1	30.0814-204.1	0	KOLECKO / /	d 35	1
2	30.0814-204.2	0	NABOJ / /	d 20	1

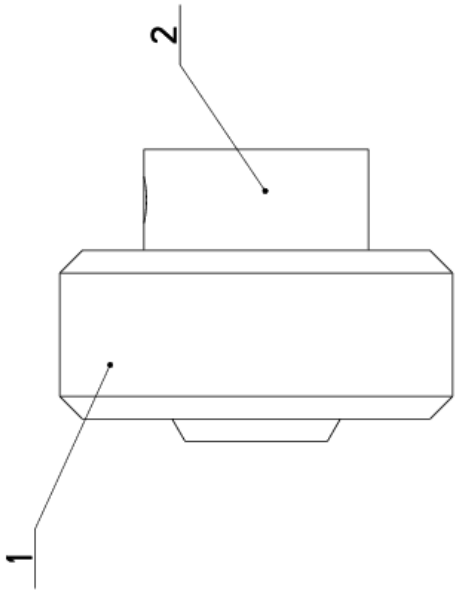

Cislo Sestavy/Number of assembly/Nummer der Baugruppe; Verze (Ver.)/Version/Version; Nazev sestavy/Assembly title/Name der Baugruppe; Pozice (Poz.)/Position/Position;
Objednaci cislo/Purchase order number/Bestellnummer; Nazev polozky/Volume title/Name der Position; Rozmer/Stock size/Abmessung

7.20. Pohon / Drive / Antrieb

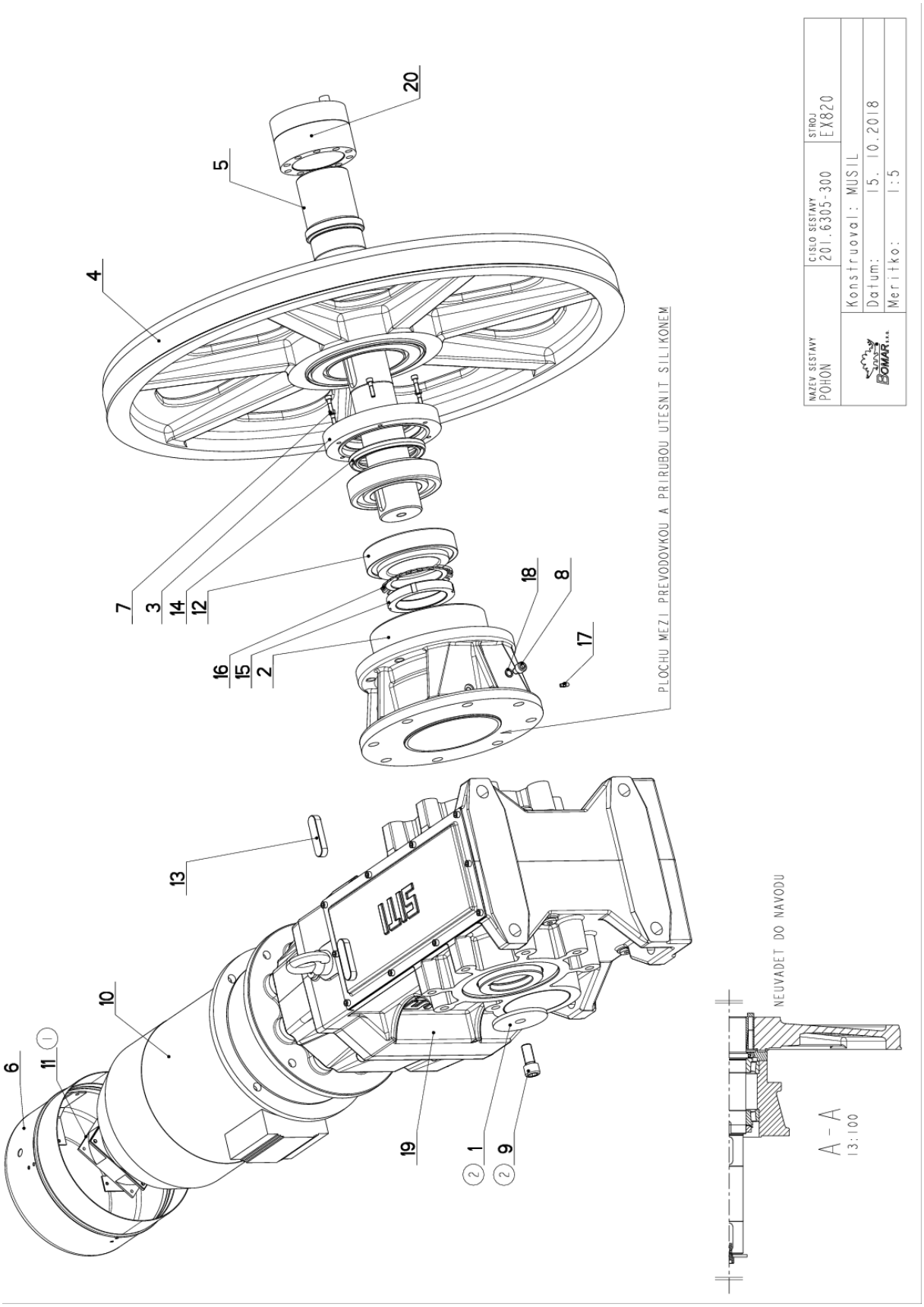

7.21. Kusovník / Piece list / Stückliste - Pohon / Drive / Antrieb

Cislo Sestavy	Ver.	Nazev sestavy
201.6305-300	2	POHON/DRIVE /ANTRIEB

Poz.	Objednaci cislo	Ver.	Nazev polozky	Rozmer	Ks
1	30.1804-106 (2)	0	PODLOZKA / WASHER / UNTERLEGSCHEIBE	P 6x90	1
2	30.6205-402	2	PRIRUBA / FLANGE / FLANSCHE		1
3	30.6205-407	1	VIKO / COVER / DECKEL	P 30x192	1
4	30.6305-007	1	KOLO HNACI / DRIVE WHEEL / ANTRIEBSRAD		1
5	30.6305-301	0	HRIDEL / SHAFT / WELLE	D 100	1
6	30.6704-018	4	VENTILATOR / VENTILATOR / VENTILATOR		1
7	90.001.25.019	0	SROUB IMBUS / ALLEN HEAD BOLT / IMBUSSCHRAUBE	M6X25	6
8	90.001.25.043	0	SROUB IMBUS / ALLEN HEAD BOLT / IMBUSSCHRAUBE	M10X12	1
9	90.001.25.075 (2)	0	SROUB IMBUS / ALLEN HEAD BOLT / IMBUSSCHRAUBE	M16X35	1
10	91.001.070	0	ELEKTROMOTOR / ELECTRIC MOTOR / ELEKTROMOTOR	7,5kW,4P,B5,Vel	1
11	91.015.126 (1)	0	VENTILATOR / VENTILATOR / VENTILATOR	VENTILATOR RDH1238,B2	1
12	95.300.018	0	LOZISKO KUZELIK / BEARING / LAGER	32217A	2
13	95.810.041	0	PERO TESNE / TIGHT SPRING / PASSFEDER	PERO 20X12X70	2
14	95.830.009	0	GUFERO / GIT SEAL / DICHTUNG	GUFERO 95X125X12	1
15	95.850.012	0	MATICE KM / KM NUT / KM-MUTTER	MATICE KM17	1
16	95.855.011	0	PODLOZKA / WASHER / UNTERLEGSCHEIBE	POJISTNA PODLOZKA MB17	1
17	95.860.001	0	MAZNICE / LUBRICATOR / ÖLER	KULOVA PRIMA M5	1
18	96.082.001	0	KROUZEK TESNICI / SEAL RING / DICHTUNGSRING	10/14x1.5 CU	1
19	99.003.024	0	PREVODOVKA KUZELOCEL / CONICAL TRANSMISSION / KEGELRADGETRIEBE	MBH140C PAM132	1
20	99.710.013	0	SPOJKA / JOINT / KUPPLUNG	85x125	1

1.ZRUS.VENTILATOR 91.015.100 A NAHR.91.015.126. 074/ZM018 11.2.2014 SLEZACKOVA

2.ZRUS. PODLOZKA 30.1804-005 A NAHR. PODLOZKOU 30.1804-106, ZRUS. SROUB M16x35 90.011.27.040 A NAHR. 90.001.25.075. 226/ZM370 15.10.2018 SZABARI

Cislo Sestavy/Number of assembly/Nummer der Baugruppe; Verze (Ver.)/Version/Version; Nazev sestavy/Assembly title/Name der Baugruppe; Pozice (Poz.)/Position/Position; Objednaci cislo/Purchase order number/Bestellnummer; Nazev polozky/Volume title/Name der Position; Rozmer/Stock size/Abmessung

7.22. Napínání / Tensioning / Spannung

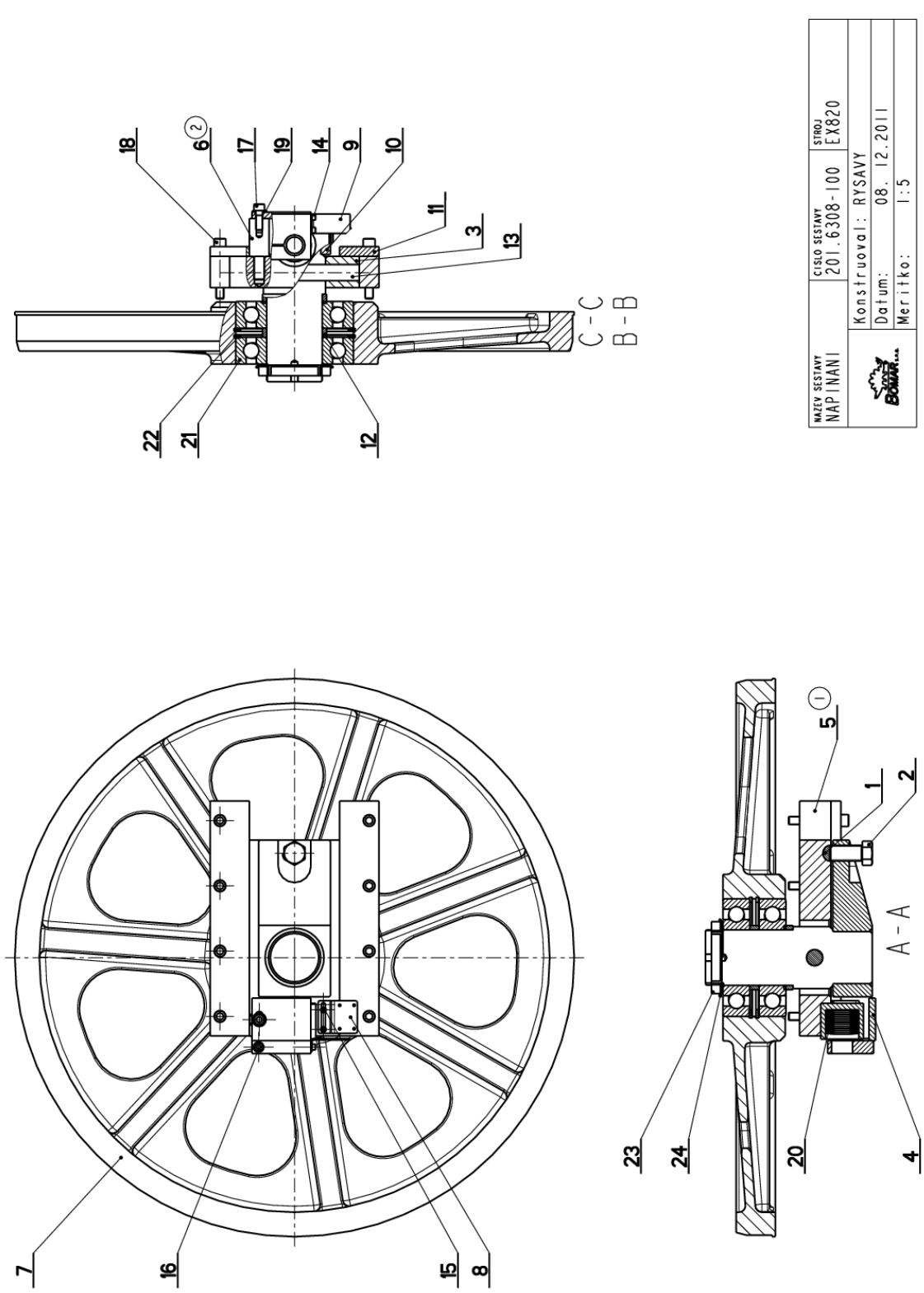

7.23. Kusovník / Piece list / Stückliste - Napínání / Tensioning / Spannung

Cislo Sestavy	Ver.	Nazev sestavy
201.6308-100	2	NAPINANI/TENSIONING/SPANNUNG

Poz.	Objednaci cislo	Ver.	Nazev polozky	Rozmer	Ks
1	30.6208-003	0	CEP / LUG / BOLZEN	d 25	1
2	30.6208-004	0	SROUB / BOLT / SCHRAUBE	TYC 32	1
3	30.6208-102	0	KOSTKA NAPINANI / TENSIONING CUBE / BANDSPANNUNGSWÜRFEL		1
4	30.6208-104	1	TRMEN / BINDER / BÜGEL		1
5	30.6208-105 (1)	2	LISTA / TRIM / LEISTE	TYC 50x30	2
6	30.6208-109 (2)	0	DORAZ / STOP PIECE / ANSCHLAG	D 30	1
7	30.6308-006	0	KOLO NAPINACI / TENSIONING WHEEL / UMLENKRAD		1
8	30.6708-303	1	DRZAK / HOLDER / HALTER	P3x50	1
9	30.6708-304	0	DORAZ / STOP PIECE / ANSCHLAG	P 2x20x76	1
10	30.7508-001	2	CEP NAPINANI / TENSIONING LUG / SPANNUNGSBOLZEN		1
11	30.7508-004	2	LISTA / TRIM / LEISTE	TYC 60x15	2
12	30.7508-005	3	KROUZEK / RING / RING	TR 102x10	2
13	30.7508-007	0	CEP / LUG / BOLZEN	TYC 25j6	1
14	90.001.25.007	0	SROUB IMBUS CERNENY / ALLEN HEAD BOLT / IMBUSSCHRAUBE	M5X10	2
15	90.001.25.009	0	SROUB IMBUS CERNENY / ALLEN HEAD BOLT / IMBUSSCHRAUBE	M5X16	2
16	90.001.25.040	0	SROUB IMBUS / ALLEN HEAD BOLT / IMBUSSCHRAUBE	M8X60	1
17	90.001.25.048	0	SROUB IMBUS / ALLEN HEAD BOLT / IMBUSSCHRAUBE	M10X30	1
18	90.001.25.065	0	SROUB IMBUS / ALLEN HEAD BOLT / IMBUSSCHRAUBE	M12X80	8
19	90.150.50.006	0	PODLOZKA / WASHER / UNTERLEGSCHEIBE	PODLOZKA 10,5	1
20	90.350.02.004	0	TAL.PRUZINA DIN 2093 A / DISC SPRING / TELLERFEDER	50X25.4X3	12
21	95.001.053	0	LOZISKO / BEARING / LAGER	6317A	2
22	95.801.033	0	KROUZEK POJIST.VNITR / INSIDE SAFETY RING / SICHERUNGSRING INNEN	POJISTNY KROUZEK 180	2
23	95.850.012	0	MATICE KM / KM NUT / KM-MUTTER	MATICE KM17	1
24	95.855.011	0	PODLOZKA / WASHER / UNTERLEGSCHEIBE	POJISTNA PODLOZKA MB17	1

1.ZRUS.LISTA 30.7508-003 A NAHR. 30.6208-105. 075/ZM078 17.3.2008 SLEZACKOVA
2.ZRUS.DORAZOVY SROUB 30.6208-103 A NAHR.30.6208-109. 284/ZM321 8.12.2011 SLEZACKOVA

Cislo Sestavy/Number of assembly/Nummer der Baugruppe; Verze (Ver.)/Version/Version; Nazev sestavy/Assembly title/Name der Baugruppe; Pozice (Poz.)/Position/Position; Objednaci cislo/Purchase order number/Bestellnummer; Nazev polozky/Volume title/Name der Position; Rozmer/Stock size/Abmessung

7.24. Vedení pásu / Belt guide / Sägebandführung

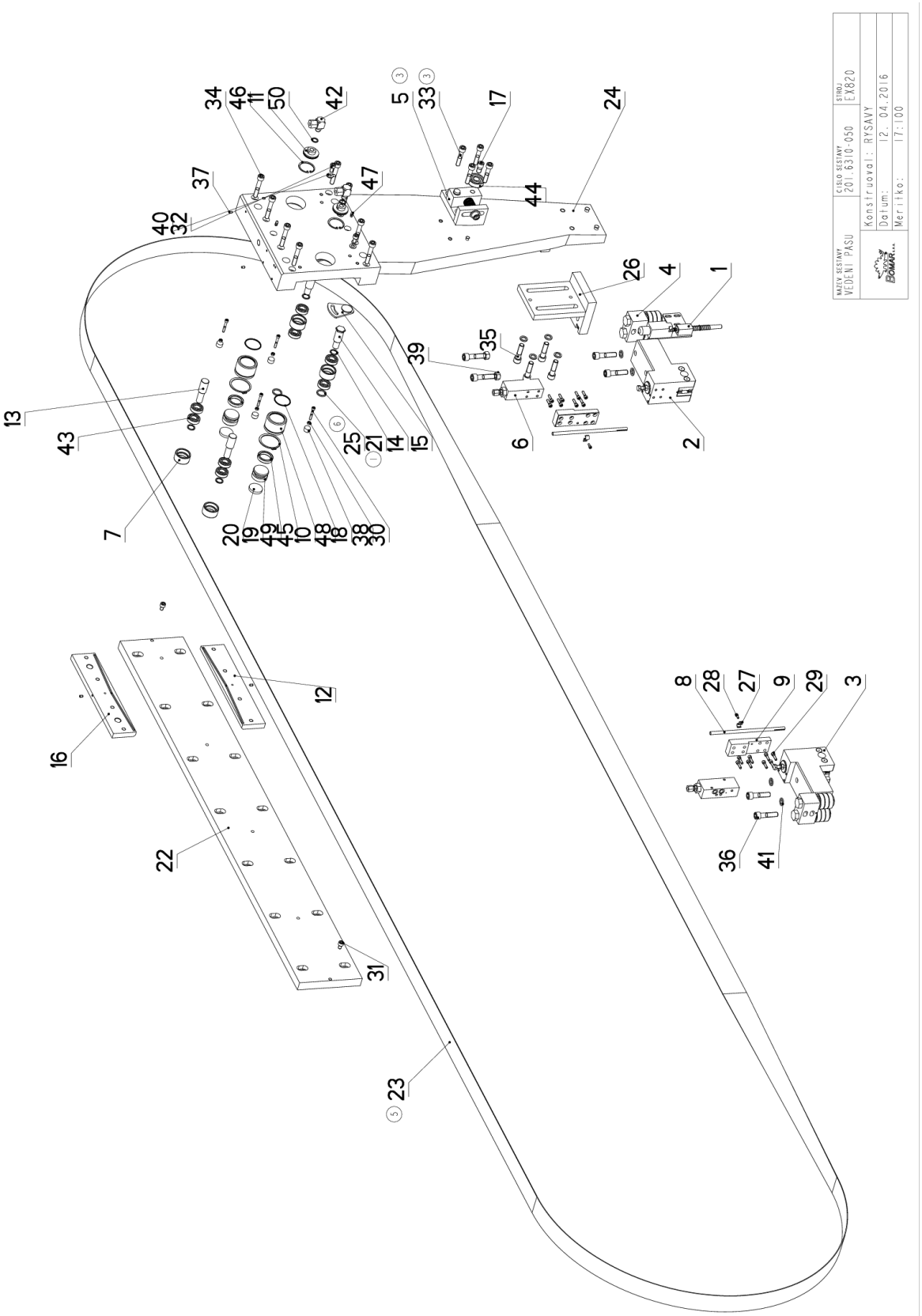

7.25. Kusovník / Piece list / Stückliste - Vedení pásu / Belt guide / Sägebandführung

Cislo Sestavy	Ver.	Nazev sestavy
201.6310-050	6	VEDENI PASU/BELT GUIDE/SÄGEBANDFÜHRUNG

Poz.	Objednaci cislo	Ver.	Nazev polozky	Rozmer	Ks
1	201.6110-020	1	DORAZ / STOP PIECE / ANSCHLAG		1
2	201.6210-100	4	KOSTKA VODICI / LEAD CUBE / FÜHRUNGSKLOTZ		1
3	201.6210-200	4	KOSTKA VODICI / LEAD CUBE / FÜHRUNGSKLOTZ		1
4	201.6210-300	3	VEDENI PASU / BELT GUIDE / SÄGEBANDFÜHRUNG		2
5	201.6310-060 (3)	0	VEDENI / GUIDE / BACKENFÜHRUNG		1
6	201.6816-100	0	KOSTKA REGULACE / REGULATION CUBE / REGELUNGSWÜRFEL		2
7	30.1503-006	0	KLADKA / PULLEY / ROLLE	d 45	4
8	30.6010-315	0	TRUBKA / TUBE / ROHR	TR 8x 1	2
9	30.6016-002	0	DESKA / BOARD / PLATTE	HR 40x20	2
10	30.6210-053	0	TRUBKA / TUBE / ROHR	TR 52/40	2
11	30.6210-054	0	VIKO / COVER / DECKEL	TYC KR TAZ 42	2
12	30.6210-055	0	LISTA VODICI / LEAD TRIM / FÜHRUNGSLEISTE	TYC PL T 65x15	1
13	30.6210-056	1	CEP / LUG / BOLZEN	D 22	2
14	30.6210-057	1	CEP / LUG / BOLZEN	TYC 6HR-22	2
15	30.6210-058	0	PODLOZKA / WASHER / UNTERLEGSCHEIBE		2
16	30.6210-060	1	LISTA VODICI / LEAD TRIM / FÜHRUNGSLEISTE	TYC PL T 65x15	1
17	30.6210-061	0	SROUB / BOLT / SCHRAUBE	SROUB 12x20	1
18	30.6210-062	0	PODLOZKA / WASHER / UNTERLEGSCHEIBE	TYC 16	4
19	30.6210-063	0	PIST / PISTON / KOLBEN	D 40	2
20	30.6210-064	1	PODLOZKA / WASHER / UNTERLEGSCHEIBE	TYC d 36	2
21	30.6210-068 (6)	1	KROUZEK DISTANCNI / DISTANCE RING / DISTANZRING	TR 20 x 4	4
22	30.6310-002	3	LISTA / TRIM / LEISTE	HR 180x25	1
23	30.6310-004 (5)	0	PAS PILOVY / SAW BELT / SÄGEBAND	54x1,6	1
24	30.6310-051	6	DRZAK / HOLDER / HALTER		1
25	30.6310-052 (6)	0	KROUZEK DISTANCNI / DISTANCE RING / DISTANZRING	TR 25x2.5	2
26	30.6310-053	1	DRZAK / HOLDER / HALTER		1
27	30.9010-003	0	DRZAK / HOLDER / HALTER	PI.5x10	2
28	90.001.25.002	0	SROUB IMBUS / ALLEN HEAD BOLT / IMBUSSCHRAUBE	M4X10	2
29	90.001.25.010	0	SROUB IMBUS / ALLEN HEAD BOLT / IMBUSSCHRAUBE	M5X20	16
30	90.001.25.013	0	SROUB IMBUS / ALLEN HEAD BOLT / IMBUSSCHRAUBE	M5X35	4
31	90.001.25.029	0	SROUB IMBUS / ALLEN HEAD BOLT / IMBUSSCHRAUBE	M8X12	2
32	90.001.25.031	0	SROUB IMBUS / ALLEN HEAD BOLT / IMBUSSCHRAUBE	8x16	2
33	90.001.25.052 (3)	0	SROUB IMBUS / ALLEN HEAD BOLT / IMBUSSCHRAUBE	M10X50	4
34	90.001.25.054	0	SROUB IMBUS / ALLEN HEAD BOLT / IMBUSSCHRAUBE	M10X60	8

Cislo Sestavy/Number of assembly/Nummer der Baugruppe; Verze (Ver.)/Version/Version; Nazev sestavy/Assembly title/Name der Baugruppe; Pozice (Poz.)/Position/Position; Objednaci cislo/Purchase order number/Bestellnummer; Nazev polozky/Volume title/Name der Position; Rozmer/Stock size/Abmessung

7.26. Vedení pásu / Belt guide / Sägebandführung

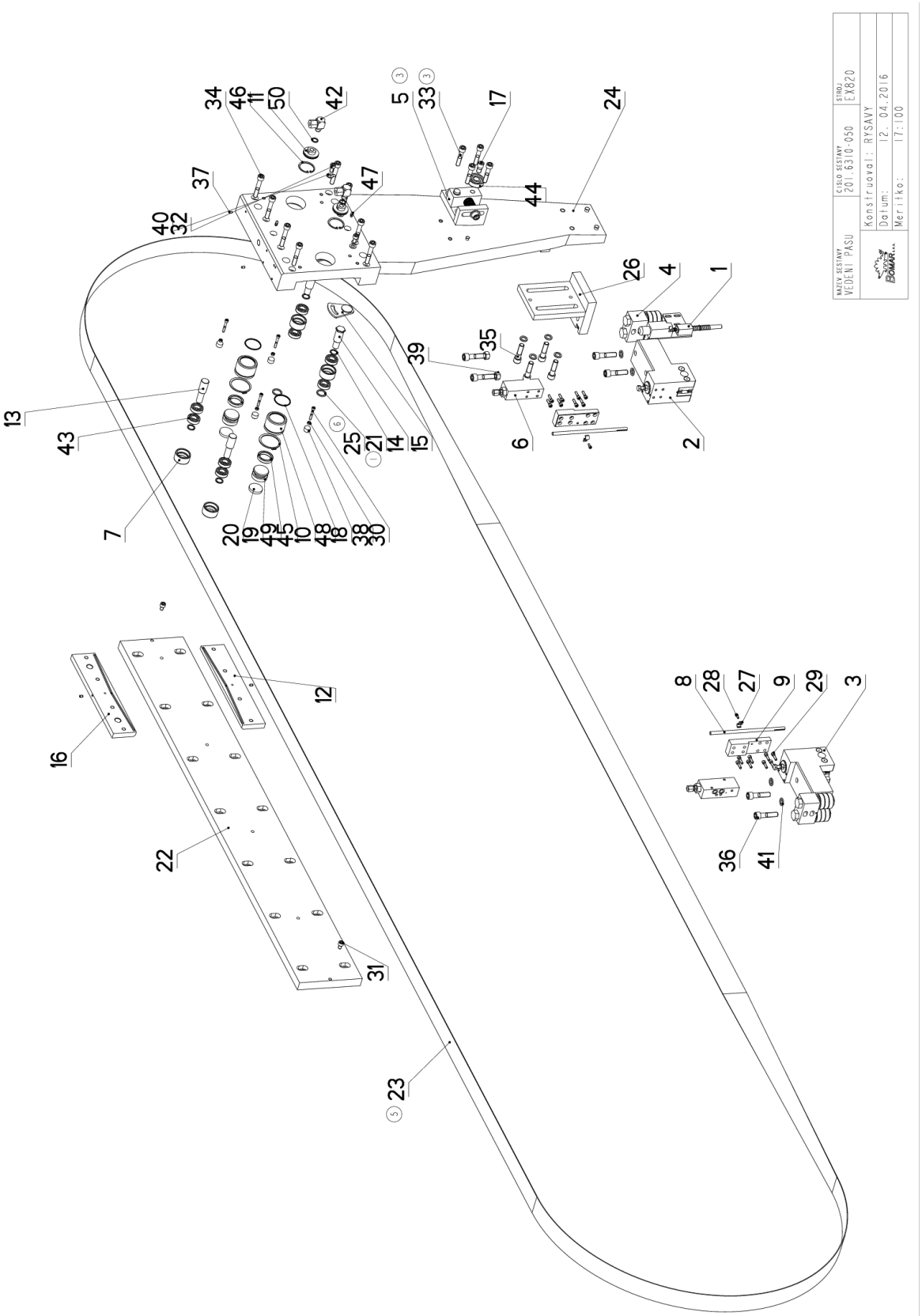

7.27. Kusovník / Piece list / Stückliste - Vedení pásu / Belt guide / Sägebandführung

35	90.001.25.061	0	SROUB IMBUS / ALLEN HEAD BOLT / IMBUSSCHRAUBE	M12X45	4
36	90.001.25.062	0	SROUB IMBUS / ALLEN HEAD BOLT / IMBUSSCHRAUBE	M12X50	6
37	90.003.20.002	0	SROUB STAVECI / ADJUSTMENT BOLT / STELLSCHRAUBE	SROUB M5X10	4
38	90.100.55.003	0	MATICE / NUT / MUTTER	MATICE _ M5	4
39	90.100.55.007	0	MATICE / NUT / MUTTER	MATICE _ M12	2
40	90.150.50.005	0	PODLOZKA / WASHER / UNTERLEGSCHEIBE	PODLOZKA 8,4	2
41	90.163.00.003	0	PODLOZKA / WASHER / UNTERLEGSCHEIBE	NORD-LOCK	8
42	92.003.001	0	SROUBENI UHLOVE / ANGLE BOLTING / WINKELVERSCHRAUBUNG	P-RSWS-08LR	2
43	95.001.006	0	LOZISKO / BEARING / LAGER	6002 2RS	8
44	95.001.023	0	LOZISKO / BEARING / LAGER	6302 2RS	1
45	95.800.019	0	SEGR HRIDEL. / OUTSIDE SAFETY RING / SICHERUNGSRING AUSSEN	POJISTNY KROUZEK 52	2
46	95.801.005	0	SEGR DIRA / OUTSIDE SAFETY RING / SICHERUNGSRING AUSSEN	POJISTNY KROUZEK 40	2
47	95.860.001	0	MAZNICE / LUBRICATOR / ÖLER	KULOVA PRIMA M5	2
48	96.001.010	0	O-KROUZEK STATIC / STATIC O RING / O-RING STATISCH	36X2	2
49	96.042.001	0	TESNENI / SEALING / DICHTUNG	40x30x8 K606	2
50	96.082.002	0	TESNENI / SEAL RING / DICHTUNGSRING	13/17x1.5 CU	2

1.ZRUS.PODLOZKA 6310-055 A NAHR.PODLOZKOU 30.6210-068,PRIDANA PODLOZKA 30.6310-052. 466/ZM465 19.12.2007 SLEZACKOVA

2.DOPLNEN 2xPODLOZKA 30.6210-068,CELKEM 4 ks.348/ZM348 17.10.2008 SLEZACKOVA

3.ZRUS.KOSTKA 30.6310-059 A NAHR.DRZAKEM 201.6310-060,ZRUS.2xSROUB IMBUS M8x50 A NAHR.4xSROUB IMBUS M10x50.(90.001.25.052) 419/ZM434 15.12.2008 SLEZACKOVA

4.DOPLNEN NAVODOVY KUSOVNIK. 9.10.2009 SLEZACKOVA

5.ZRUSEN PAS 44.103.010 A NAHR.30.6310-004. 044/ZM93 12.4.2016 SLEZACKOVA

6.PRIDAN 2xKROUZEK 30.6210-068,ZM.POLOHY KROUZKU 30.6310-052. 010/ZM031 25.1.2017 SLEZACKOVA

Cislo Sestavy/Number of assembly/Nummer der Baugruppe; Verze (Ver.)/Version/Version; Nazev sestavy/Assembly title/Name der Baugruppe; Pozice (Poz.)/Position/Position; Objednaci cislo/Purchase order number/Bestellnummer; Nazev polozky/Volume title/Name der Position; Rozmer/Stock size/Abmessung

7.28. Doraz / Stop piece / Anschlag

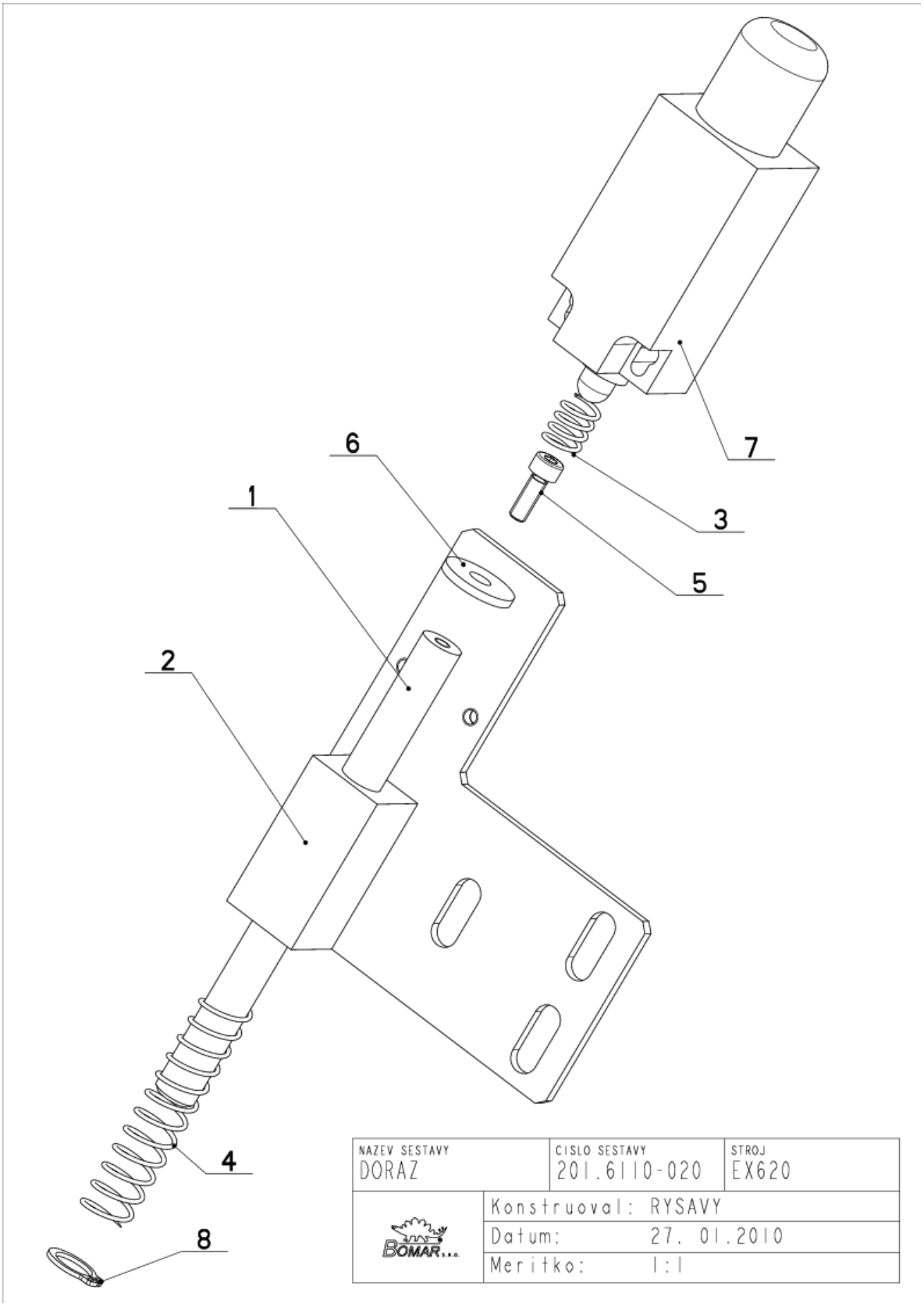

7.29. Kusovník / Piece list / Stückliste - Doraz / Stop piece / Anschlag

Cislo Sestavy	Ver.	Nazev sestavy
201.6110-020	1	DORAZ/STOP PIECE/ANSCHLAG

Poz.	Objednaci cislo	Ver.	Nazev polozky	Rozmer	Ks
1	30.6110-114	0	TYC / POLE / STANGE	d 10	1
2	30.6110-116	0	DORAZ / STOP PIECE / ANSCHLAG		1
3	31.1605-121	0	PRUZINA / SPRING / FEDER	1x9.5x12x4	1
4	31.2801-014	0	PRUZINA / SPRING / FEDER	1x12.5x60x12	1
5	90.001.25.003	0	SROUB IMBUS / ALLEN HEAD BOLT / IMBUSSCHRAUBE	M4X12	1
6	90.151.50.006		PODLOZKA / WASHER / UNTERLEGSCHEIBE	PODLOZKA 5	1
7	91.173.007	0	SPINAC KONCOVY / END SWITCH / ENDSCHALTER	-RIWK	1
8	95.800.003	0	SEGR HRIDEL. / OUTSIDE SAFETY RING / SICHERUNGSRING AUSSEN	POJISTNY KROUZEK 10	1

7.30. Kostka vodící / Lead cube / Führungsklotz

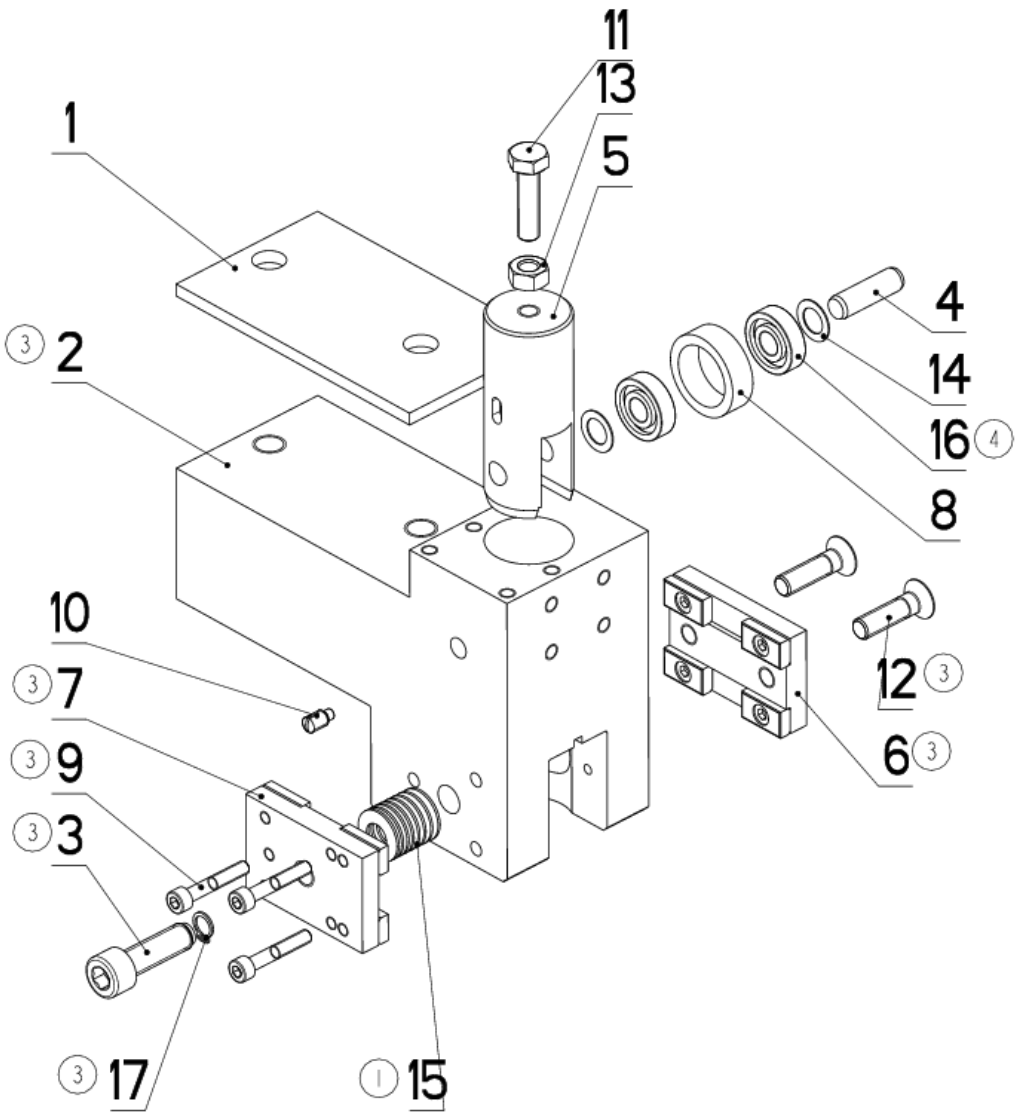

PAS 54x1,3-1,6

NAZEV SESTAVY	CISLO SESTAVY	STROJ
KOSTKA VODICI	201.6210-100	EXTEND 720

BOMAR	Konstruoval: STASTNA
	Datum: 23. 06.2015
	Meritko: 1:2

7.31. Kusovník / Piece list / Stückliste - Kostka vodící / Lead cube / Führungsklotz

Cislo Sestavy	Ver.	Nazev sestavy
201.6210-100	4	KOSTKA VODICI/LEAD CUBE/FÜHRUNGSKLOTZ

Poz.	Objednaci cislo	Ver.	Nazev polozky	Rozmer	Ks
1	30.6210-103	1	DESKA / BOARD / PLATTE	P 5x70x120	1
2	30.6210-104 (3)	0	KOSTKA / CUBE / WÜRFEL	TYC 120 x 80	1
3	30.6210-107 (3)	0	SROUB IMBUS / ALLEN HEAD BOLT / IMBUSSCHRAUBE	M10X35	1
4	30.6710-108	1	KOLIK / PIN / BOLZEN	TYC 10	1
5	30.6710-109	0	PIST / PISTON / KOLBEN	d 32	1
6	30.Y610-110 (3)	0	DRZAK TVRDOKOVU / POA HOLDER / HM-HALTER		1
7	30.Y610-120 (3)	0	DRZAK TVRDOKOVU / POA HOLDER / HM-HALTER		1
8	31.6710-110 (4)	1	KROUZEK / RING / RING	LH 2403210	1
9	90.001.25.012 (3)	0	SROUB IMBUS / ALLEN HEAD BOLT / IMBUSSCHRAUBE	M5X30	3
10	90.004.20.002	0	SROUB STAVECI / ADJUSTMENT BOLT / STELLSCHRAUBE	SROUB M6X12	1
11	90.005.55.017	0	SROUB 6HRANNY / 6 SIDED BOLT / SECHSKANTSCHRAUBE	SROUB M8X30	1
12	90.011.27.043 (3)	0	ZAPUSTNY IMBUS / COUNTERSINK BOLT / SENKSCHRAUBE	SROUB M8X30	2
13	90.100.55.005	0	MATICE / NUT / MUTTER	MATICE _ M8	1
14	90.154.50.003	0	PODLOZKA / WASHER / UNTERLEGSCHEIBE	10x16x0.50	2
15	90.350.02.005 (1)	0	PRUZINA TALIROVA / DISC SPRING / TELLERFEDER	20X10.2X1	8
16	95.001.044	0	LOZISKO / BEARING / LAGER	609 2RS	2
17	95.800.002 (3)	0	SEGR HRIDEL. / OUTSIDE SAFETY RING / SICHERUNGSRING AUSSEN	POJISTNY KROUZEK 8	1

1.ZRUS.SOUC. KROUZEK DYNAMICKY 16x2.5 96.002.008, PIST 30.6010-117,2xSROUB M6x25 90.001.25.019 A NAHR. SROUBEM M6x20 90.001.25.018,PRIDANA 8xTAL.PRUZINA 20x10.2x1.1 90.350.02.005, 1xPOJISTNY KROUZEK 16 95.801.035, 1xSROUB M10x25 90.015.30.003. 358/ZM405 1.11.2007 SLEZACKOVA

2.ZRUSENA KOSTKA 30.6210-101 A NAHR.KOSTKOU 30.6210-102. 191/ZM267 14.8.2008 SLEZACKOVA

3.ZRUS.KOSTKA 30.6210-102 A NAHR.30.6210-104,ZRUS.DESKA VODICI 30.7510-114 A NAHR.DESKOU 30.Y610-120, ZRUS.DESKA 30.7510-104 A NAHR.DESKOU 30.Y610-110,ZRUS.SOUCASTI 30.7510-118,95.801.035,90.015.30.003,90.001.25.018, 90.001.25.046,PRID.SOUC.30.6210-107,90.001.25.012,90.011.27.043,95.800.002. 142/ZM198 5.10.2009 SLEZACKOVA

4.ZRUS.SOUC.30.6710-110 A NAHR.31.6710-110. 175/ZM178 27.7.2015 SLEZACKOVA

Cislo Sestavy/Number of assembly/Nummer der Baugruppe; Verze (Ver.)/Version/Version; Nazev sestavy/Assembly title/Name der Baugruppe; Pozice (Poz.)/Position/Position; Objednaci cislo/Purchase order number/Bestellnummer; Nazev polozky/Volume title/Name der Position; Rozmer/Stock size/Abmessung

7.32. Kostka vodící / Lead cube / Führumgsklotz

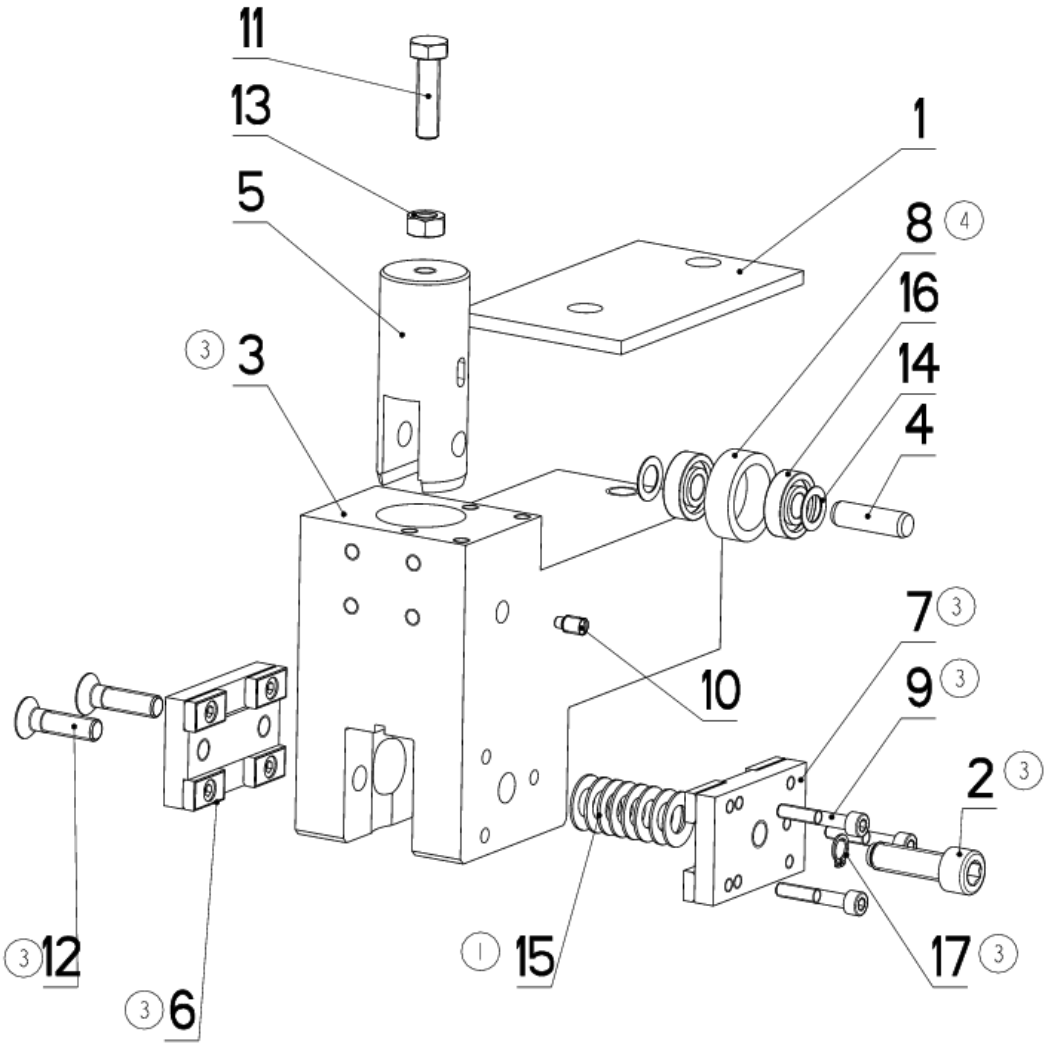

PAS 54x1,3-1,6

NAZEV SESTAVY	CISLO SESTAVY	STROJ
KOSTKA VODICI	201.6210-200	EXTEND720

BOMAR	Konstruoval: STASTNA
	Datum: 23. 06.2015
	Meritko: 1:2

7.33. Kusovník / Piece list / Stückliste - Kostka vodící / Lead cube / Führumgsklotz

Cislo Sestavy	Ver.	Nazev sestavy
201.6210-200	4	KOSTKA VODICI/LEAD CUBE/FÜHRUNGSKLOTZ

Poz.	Objednaci cislo	Ver.	Nazev polozky	Rozmer	Ks
1	30.6210-103	1	DESKA / BOARD / PLATTE	P 5x70x120	1
2	30.6210-107 (3)	0	SROUB IMBUS / ALLEN HEAD BOLT / IMBUSSCHRAUBE	M10X35	1
3	30.6210-203 (3)	0	KOSTKA VODICI / LEAD CUBE / FÜHRUNGSKLOTZ	TYC 120 x 80	1
4	30.6710-108	1	KOLIK / PIN / BOLZEN	TYC 10	1
5	30.6710-109	0	PIST / PISTON / KOLBEN	d 32	1
6	30.Y610-110 (3)	0	DRZAK TVRDOKOVU / POA HOLDER / HM-HALTER		1
7	30.Y610-120 (3)	0	DRZAK TVRDOKOVU / POA HOLDER / HM-HALTER		1
8	31.6710-110 (4)	1	KROUZEK / RING / RING	LH 2403210	1
9	90.001.25.012 (3)	0	SROUB IMBUS / ALLEN HEAD BOLT / IMBUSSCHRAUBE	M5X30	3
10	90.004.20.002	0	SROUB STAVECI / ADJUSTMENT BOLT / STELLSCHRAUBE	SROUB M6X12	1
11	90.005.55.017	0	SROUB 6HRANNY / 6 SIDED BOLT / SECHSKANTSCHRAUBE	SROUB M8X30	1
12	90.011.27.043 (3)	0	ZAPUSTNY IMBUS / COUNTERSINK BOLT / SENKSCHRAUBE	SROUB M8X30	2
13	90.100.55.005	0	MATICE / NUT / MUTTER	MATICE _ M8	1
14	90.154.50.003	0	PODLOZKA / WASHER / UNTERLEGSCHEIBE	10x16x0.50	2
15	90.350.02.005 (1)	0	PRUZINA TALIROVA / DISC SPRING / TELLERFEDER	20X10.2X1	8
16	95.001.044	0	LOZISKO / BEARING / LAGER	609 2RS	2
17	95.800.002 (3)	0	SEGR HRIDEL. / OUTSIDE SAFETY RING / SICHERUNGSRING AUSSEN	POJISTNY KROUZEK 8	1

1.ZRUS.SOUC. KROUZAK DYNAMICKY 16X2.5 96.002.008,PIST 30.6010-117, 2xSROUB M6x25 90.001.25.019 A NAHR. SROUBEM M6x20 90.001.25.018,PRIDANA 8x TAL.PRUZINA 20x10.2x1.1 90.350.02.005, 1xPOJISTNY KROUZEK 16 95.801.035 1xSROUB 90.015.30.003. 358/ZM405 1.11.2007 SLEZACKOVA

2.ZRUSENA KOSTKA 30.6210-201 A NAHRAZENA KOSTKOU 30.6210-202. 191/ZM267 14.8.2008 SLEZACKOVA

3.ZRUS.KOSTKA 30.6210-202 A NAHR. KOSTKOU 30.6210-203,ZRUS.DESKA VODICI 30.7510-104 A NAHR.30.Y610-110, ZRUS.DESKA VIDICI 30.7510-114 A NAHR.30.Y610-120,ZRUS.SOUCASTI 90.001.25.048,30.7510-118,90.001.25.018,95.801.035, 90.015.30.003,PRIDANY SOUC.90.001.25.012,95.800.002,30.6210-107,90.011.27.043. 142/ZM198 5.10.2009 SLEZACKOVA

4.ZRUS.SOUC.30.6710-110 A NAHR.31.6710-110. 175/ZM178 27.7.2015 SLEZACKOVA

Cislo Sestavy/Number of assembly/Nummer der Baugruppe; Verze (Ver.)/Version/Version; Nazev sestavy/Assembly title/Name der Baugruppe; Pozice (Poz.)/Position/Position; Objednaci cislo/Purchase order number/Bestellnummer; Nazev polozky/Volume title/Name der Position; Rozmer/Stock size/Abmessung

7.34. Vedení / Guide / Backenführung

Cislo Sestavy	Ver.	Nazev sestavy
201.6310-060	0	VEDENI/GUIDE/BACKENFÜHRUNG

Poz.	Objednaci cislo	Ver.	Nazev polozky	Rozmer	Ks
1	30.6310-061	0	DRZAK / HOLDER / HALTER		1
2	30.6310-062	0	KOSTKA / CUBE / WÜRFEL	TC 35x35	1
3	90.150.50.007	0	PODLOZKA / WASHER / UNTERLEGSCHEIBE	PODLOZKA 13	1
4	90.001.25.063	0	SROUB IMBUS / ALLEN HEAD BOLT / IMBUSSCHRAUBE	M12X60	1
5	95.800.007	0	KROUZEK POJIST.VNEJS / OUTSIDE SAFETY RING / SICHERUNGSRING AUßEN	POJISTNY KROUZEK 16	1
6	90.350.02.018	0	PRUZINA TALIROVA / DISC SPRING / TELLERFEDER	DexDixTxL	16

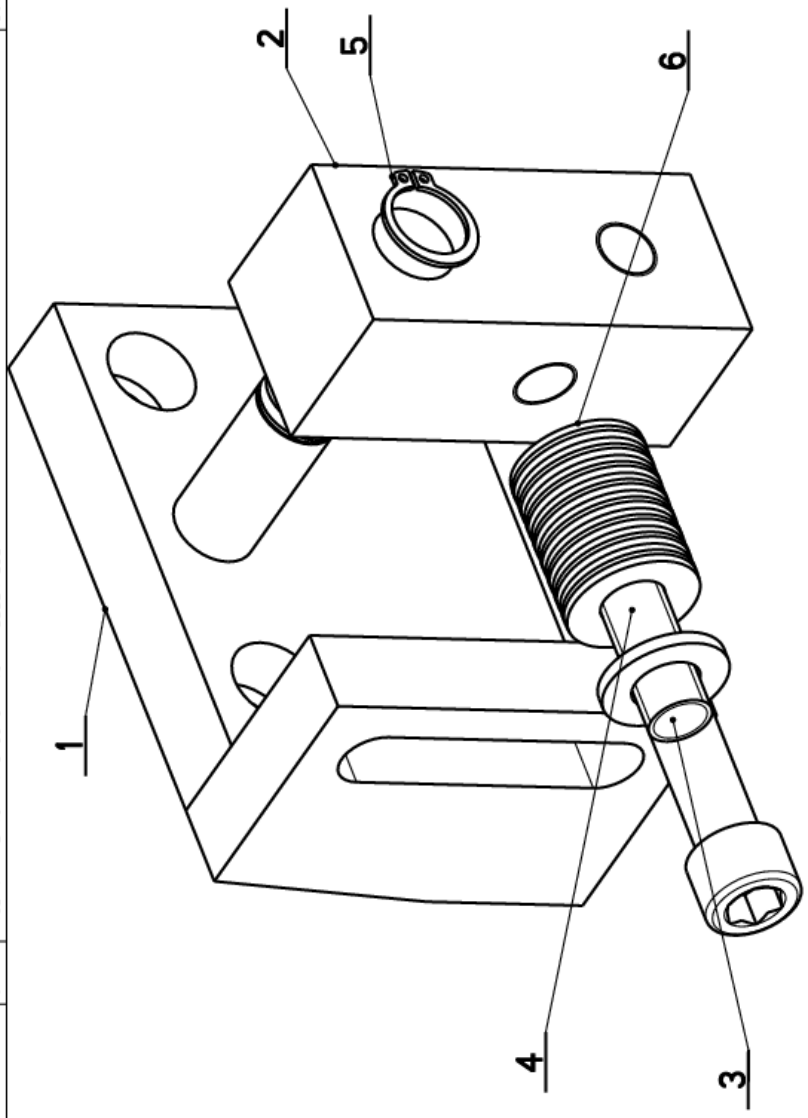

7.35. Kostka regulace / Regulation cube / Regelungswürfel

Cislo Sestavy 201.6816-100

Ver. 0

Nazev sestavy KOSTKA REGULACE/REGULATION CUBE/REGELUNGSWÜRFEL

Poz.	Objednaci cislo	Ver.	Nazev polozky	Rozmer	Ks
1	30.6816-101	1	KOSTKA REGULACE / REGULATION CUBE / REGELUNGSWÜRFEL	TYC 40x40	1
2	30.6816-104	2	VIKO / COVER / DECKEL	TYC 16	1
3	30.6816-103	0	PIST / PISTON / KOLBEN	TYC 12	1
4	30.6816-108	1	JEHLA / NEEDLE / NADEL	TYC 8	1
5	95.690.001	0	JEHLA / NEEDLE / NADEL	1.5x11.8	1
6	30.6816-106	3	PIST / PISTON / KOLBEN	TYC 12	1
7	30.6816-107	0	VIKO / COVER / DECKEL	TYC 22	1
8	92.002.102	0	SROUBENI / BOLTING / VERSCHRAUBUNG	S-GEV-8LLR	1
9	96.002.003	0	KROUZEK O DYNAMICKY / DYNAMIC O RING / O-RING DYNAMISCH	6X2	1
10	96.002.041	0	KROUZEK O DYNAMICKY / DYNAMIC O RING / O-RING DYNAMISCH	10x1	1
11	96.001.001	0	KROUZEK O STATICKY / STATIC O RING / O-RING STATISCH	4X1,8	2
12	96.001.003	0	KROUZEK O STATICKY / STATIC O RING / O-RING STATISCH	8X2	1

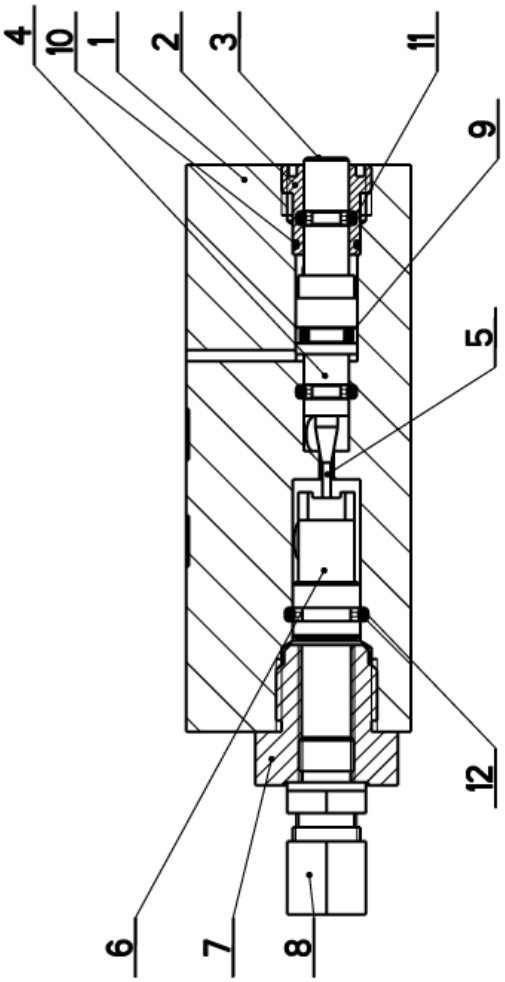

7.36. Válec napínací / Tensioning cylinder / Spannzylinder

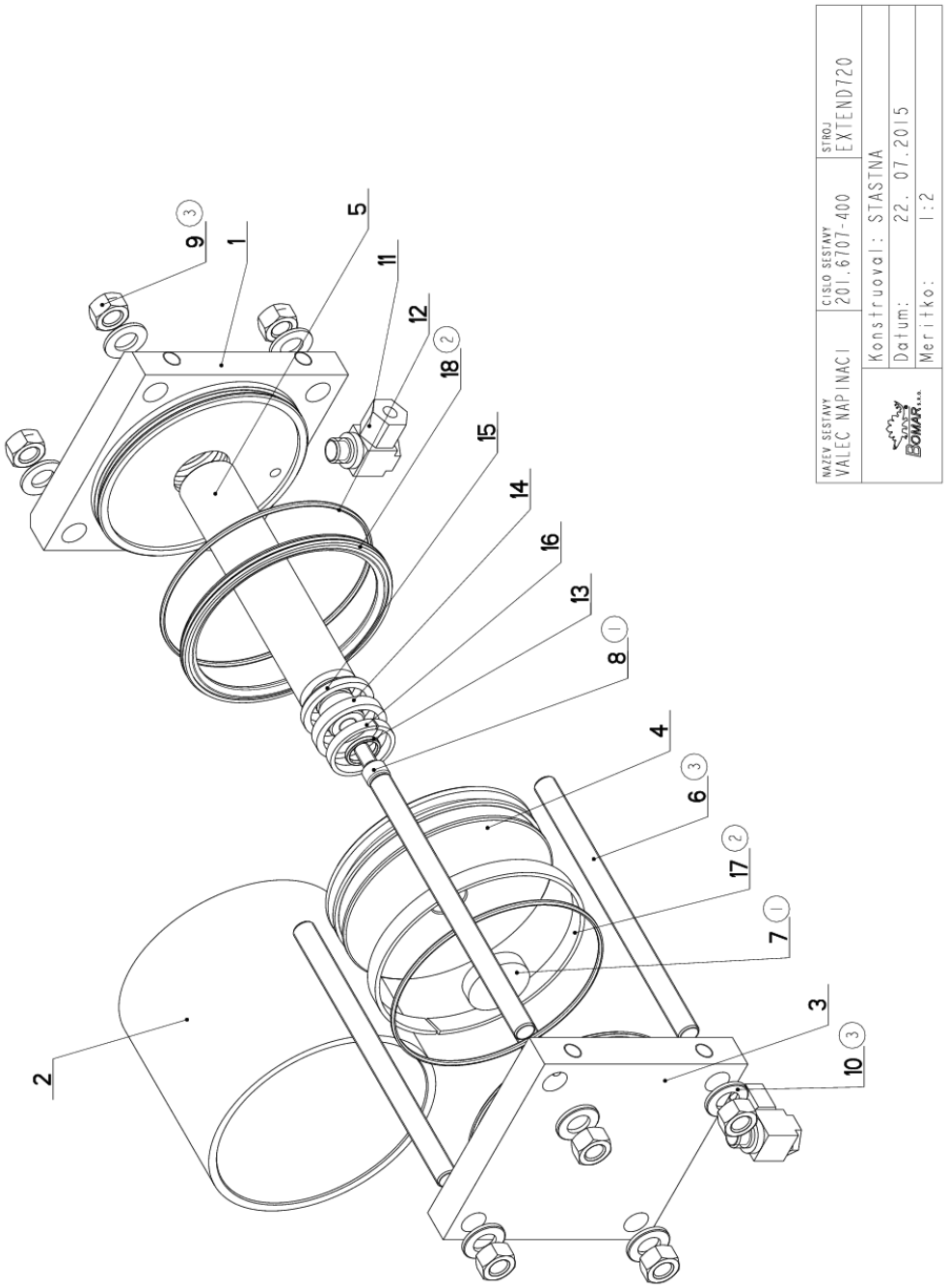

7.37. Kusovník / Piece list / Stückliste - Válec napínací / Tensioning cylinder / Spannzylinder

Cislo Sestavy	Ver.	Nazev sestavy
201.6707-400	3	VALEC NAPINACI/TENSIONING CYLINDER/SPANNZYLINDER

Poz.	Objednaci cislo	Ver.	Nazev polozky	Rozmer	Ks
1	30.6707-401	2	VIKO / COVER / DECKEL	HR 130x40	1
2	30.6707-402	0	VALEC / ROLLER / ZYLINDER	TRUBKA 130/120	1
3	30.6707-403	2	VIKO / COVER / DECKEL	HR 130x30	1
4	30.6707-404	1	PIST / PISTON / KOLBEN	d 125	1
5	30.6707-405	1	PISTNICE / PISTON ROD / KOLBENSTANGE	TYC 32	1
6	30.6707-407 (3)	1	TYC ZAVITOVA / THREADED POLE / GEWINDESTANGE	TYC M12	4
7	30.K407-005 (1)	1	PODLOZKA / WASHER / UNTERLEGSCHEIBE	P 8x35	1
8	90.001.25.031 (1)	0	SROUB IMBUS / ALLEN HEAD BOLT / IMBUSSCHRAUBE	8x16	1
9	90.100.25.006 (3)	0	MATICE / NUT / MUTTER	MATICE _ M12 _PEVNOSTNI	8
10	90.150.50.013 (3)	0	PODLOZKA / WASHER / UNTERLEGSCHEIBE	PODLOZKA B13	8
11	92.003.001	0	SROUBENI UHLOVE / ANGLE BOLTING / WINKELVERSCHRAUBUNG	P-RSWS-08LR	2
12	96.001.031	0	KROUZEK O STATICKY / STATIC O RING / O-RING STATISCH	114X3	2
13	96.002.007	0	KROUZEK O DYNAMICKY / DYNAMIC O RING / O-RING DYNAMISCH	16x2 NBR 70SH	1
14	96.042.007	0	TESNENI / SEALING / DICHTUNG	32x40x6.3	1
15	96.060.009	0	KROUZEK STIRACI / SCRAPER RING / ABSTREIFRING	32x40x5x6	1
16	96.084.003	0	KROUZEK VODICI / LEAD RING / FÜHRUNGSRING	GR 6500320	1
17	96.084.014 (2)	0	KROUZEK VODICI / LEAD RING / FÜHRUNGSRING	Páska	1
18	96.900.028 (2)	0	TESNENI KOMBINOVANE / COMBINATION SEALING / KOMBIDICHTUNG		1

1.ZRUS.PODLOZKA 8 90.151.50.005 A NAHR. PODLOZKOU 30.K407-005, ZRUS.SROUB M8x10A NAHR. SROUBEM M8x16 90.001.25.031. 191/ZM224 4.6.2007 SLEZACKOVA

2.ZRUS."O" KROUZEK 96.002.044 A NAHRAZENO TESNENI KOMBINOVANE 96.900.028. ZRUS.PASKA 95.780.001 A NAHR. 96.084.014.
316/ZM337 27.8.2007 SLEZACKOVA

3.ZRUS.TYC 30.6707-406 A NAHR.30.6707-407, ZRUS.PODLOZKA 90.150.50.006 A NAHR.90.150.50.007, ZRUS.MATICE 90.100.55.006 A NAHR.90.100.25.006. 37/ZM098 4.5.2011 SLEZACKOVA

Cislo Sestavy/Number of assembly/Nummer der Baugruppe; Verze (Ver.)/Version/Version; Nazev sestavy/Assembly title/Name der Baugruppe; Pozice (Poz.)/Position/Position; Objednaci cislo/Purchase order number/Bestellnummer; Nazev polozky/Volume title/Name der Position; Rozmer/Stock size/Abmessung

7.38. Válec zvedací / Lifting cylinder / Hebezylinder

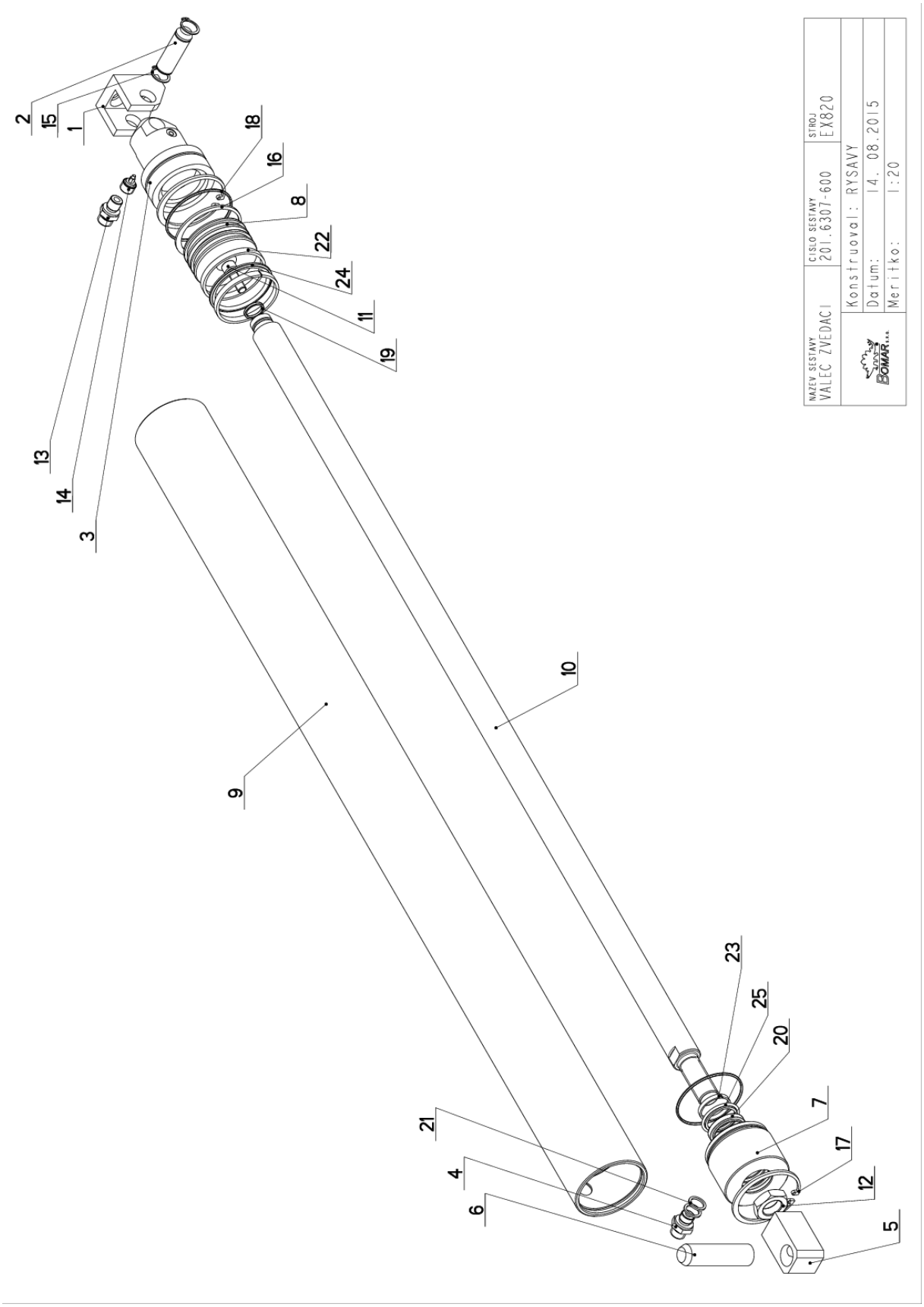

Cislo Sestavy	Ver.	Nazev sestavy
201.6307-600	4	VALEC ZVEDACI/LIFTING CYLINDER/HEBEZYLINDER

Poz.	Objednaci cislo	Ver.	Nazev polozky	Rozmer	Ks
1	30.0807-008	3	DRZAK / HOLDER / HALTER	HR 40x40	1
2	30.0807-009	2	CEP / LUG / BOLZEN	d 16h9	1
3	30.1807-008 (1)	1	VIKO / COVER / DECKEL	d 65	1
4	30.2807-109	0	SROUBENI PRIME / DIRECT BOLTING / GERADE VERSCHRAUBUNG		1
5	30.4707-206	0	DRZAK / HOLDER / HALTER	HR 30x30	1
6	30.6107-505	0	CEP / LUG / BOLZEN	d 20	1
7	30.6207-502	3	VIKO / COVER / DECKEL	TYC 70	1
8	30.6207-504 (2)	1	PIST / PISTON / KOLBEN	TYC 65 TAZENA	1
9	30.6307-401	5	VALEC / ROLLER / ZYLINDER	TR 73/63	1
10	30.6307-405	0	PISTNICE / PISTON ROD / KOLBENSTANGE	TYC 28	1
11	90.001.25.033	0	SROUB IMBUS / ALLEN HEAD BOLT / IMBUSSCHRAUBE	8x25	1
12	90.101.55.007	0	MATICE / NUT / MUTTER	MATICE M20X1,5	1
13	92.002.001	0	SROUBENI PRIME / DIRECT BOLTING / GERADE VERSCHRAUBUNG	G 1/4"	1
14	92.151.008 (3)	0	VENTIL POJISTNY / SAFETY VALVE / SICHERUNGSVENTIL	VPN-H 1/4"	1
15	95.800.007	0	SEGR HRIDEL. / OUTSIDE SAFETY RING / SICHERUNGSRING AUSSEN	POJISTNY KROUZEK 16	2
16	95.801.011	0	SEGR DIRA / INSIDE SAFETY RING / SICHERUNGSRING INNEN	POJISTNY KROUZEK 63	1
17	95.801.012	0	SEGR DIRA / INSIDE SAFETY RING / SICHERUNGSRING INNEN	POJISTNY KROUZEK 65	2
18	96.001.016 (1)	0	O-KROUZEK STATIC / STATIC O RING / O-RING STATISCH	60X2	2
19	96.002.007	0	KROUZEK O DYNAMICKY / DYNAMIC O RING / O-RING DYNAMISCH	16x2 NBR 70SH	1
20	96.061.009	0	KROUZEK STIRACI / SCRAPER RING / ABSTREIFRING	WD2200280 Z201	1
21	96.082.002 (4)	0	TESNENI / SEAL RING / DICHTUNGSRING	13/17x1.5 CU	2
22	96.084.002 (2)	0	KROUZEK VODICI / LEAD RING / FÜHRUNGSRING	GP6500630-T47	2
23	96.084.006 (2)	0	KROUZEK VODICI / LEAD RING / FÜHRUNGSRING	GR4300280-T47	1
24	96.900.016	0	TESNENI KOMBINOVANE / COMBINATION SEALING / KOMBIDICHTUNG	PT0200630	1
25	96.900.021	0	TESNENI KOMBINOVANE / COMBINATION SEALING / KOMBIDICHTUNG	RSK200280-46N	1

1.ZRUS.REDUKCE 30.9107-509,ZRUS.VIKO 30.6207-506 A NAHR.30.1807-008,ZRUS.KROUZEK 96.001.015 A NAHR.96.001.016.
ZRUS.PIST 30.6207-504 A NAHR.30.6207-507.026/ZM041 22.3.2011 SLEZACKOVA

2.DOPL.KROUZEK VODICI 1x96.084.006,1x96.084.002,ZRUS.PIST 6207-507 A NAHR.30.6207-504. 261/ZM303 22.11.2011 SLEZACKOVA

3.VENTIL 92.151.001 PRECISLOVAN NA 92.151.008. 222/ZM211 29.7.2013 SLEZACKOVA

4.ZRUS. 1xTESNENI 96.082.002. 290/ZM470 18.12.2018 SZABARI

Cislo Sestavy/Number of assembly/Nummer der Baugruppe; Verze (Ver.)/Version/Version; Nazev sestavy/Assembly title/Name der Baugruppe; Pozice (Poz.)/Position/Position;
Objednaci cislo/Purchase order number/Bestellnummer; Nazev polozky/Volume title/Name der Position; Rozmer/Stock size/Abmessung

7.40. Vynašeč třískový / Chip extractor / Spanabführung

Číslo Sestavy
201.6317-100

Ver.
2

Nazev sestavy
VYNASEC TRISKOVY/CHIP EXTRACTOR/SPANABFÜHRUNG

Poz.	Objednací číslo	Ver.	Nazev polozky	Rozmer	Ks
1	201.6017-103	0	KOLO NAPINACI / TENSIONING WHEEL / UMLENKRAD		1
2	201.6017-250	1	POHON / DRIVE / ANTRIEB		1
3	201.6717-304	1	RETEZ / CHAIN / KETTE		12
4	30.6317-122	2	KRYT / COVER / ABDECKUNG		1
5	30.6317-201	0	KORYTO / CHANNEL / RINNE		1
6	90.005.55.012	0	SROUB 6HRANNY / 6 SIDED BOLT / SECHSKANTSCHRAUBE	SROUB M6X40	2
7	90.100.55.004	0	MATICE / NUT / MUTTER	MATICE - M6	2

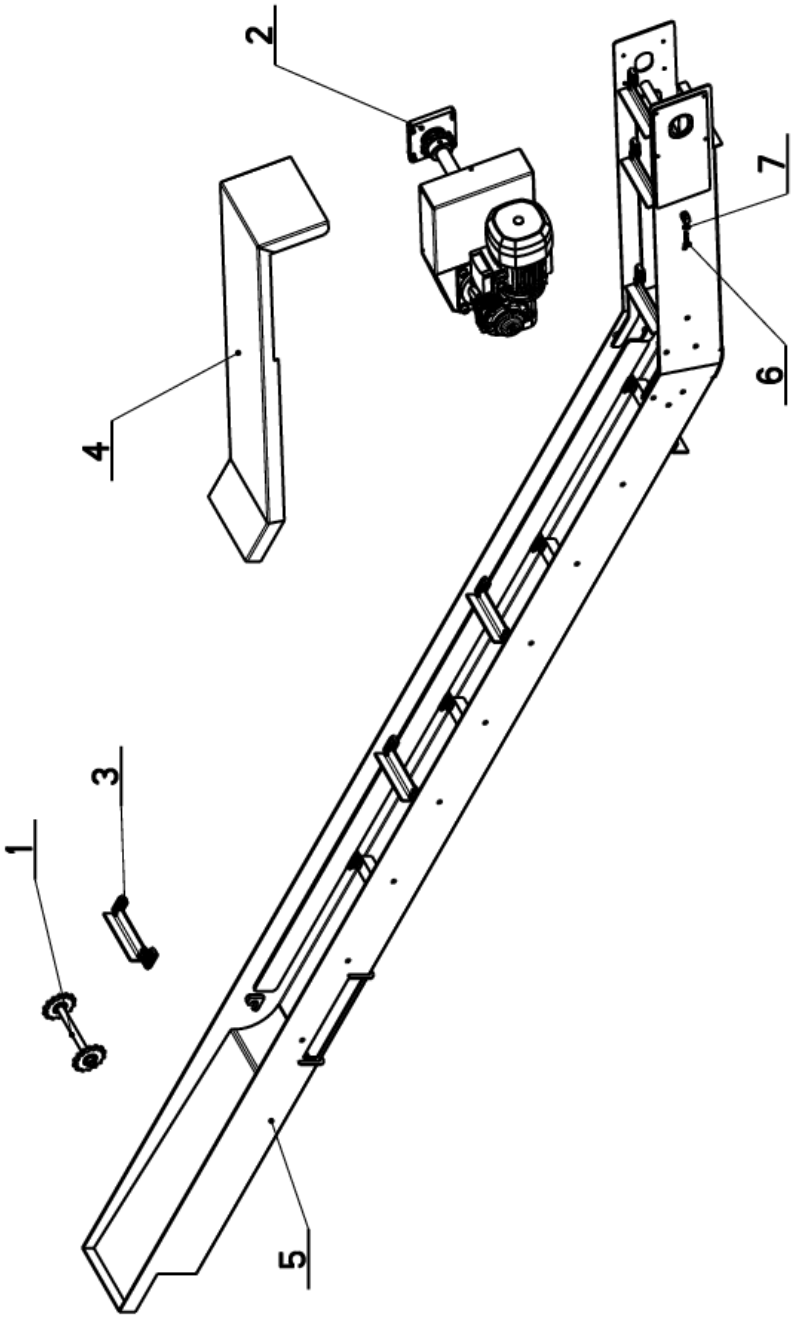

7.41. Kolo napínací / Tensioning wheel / Umlenkrad

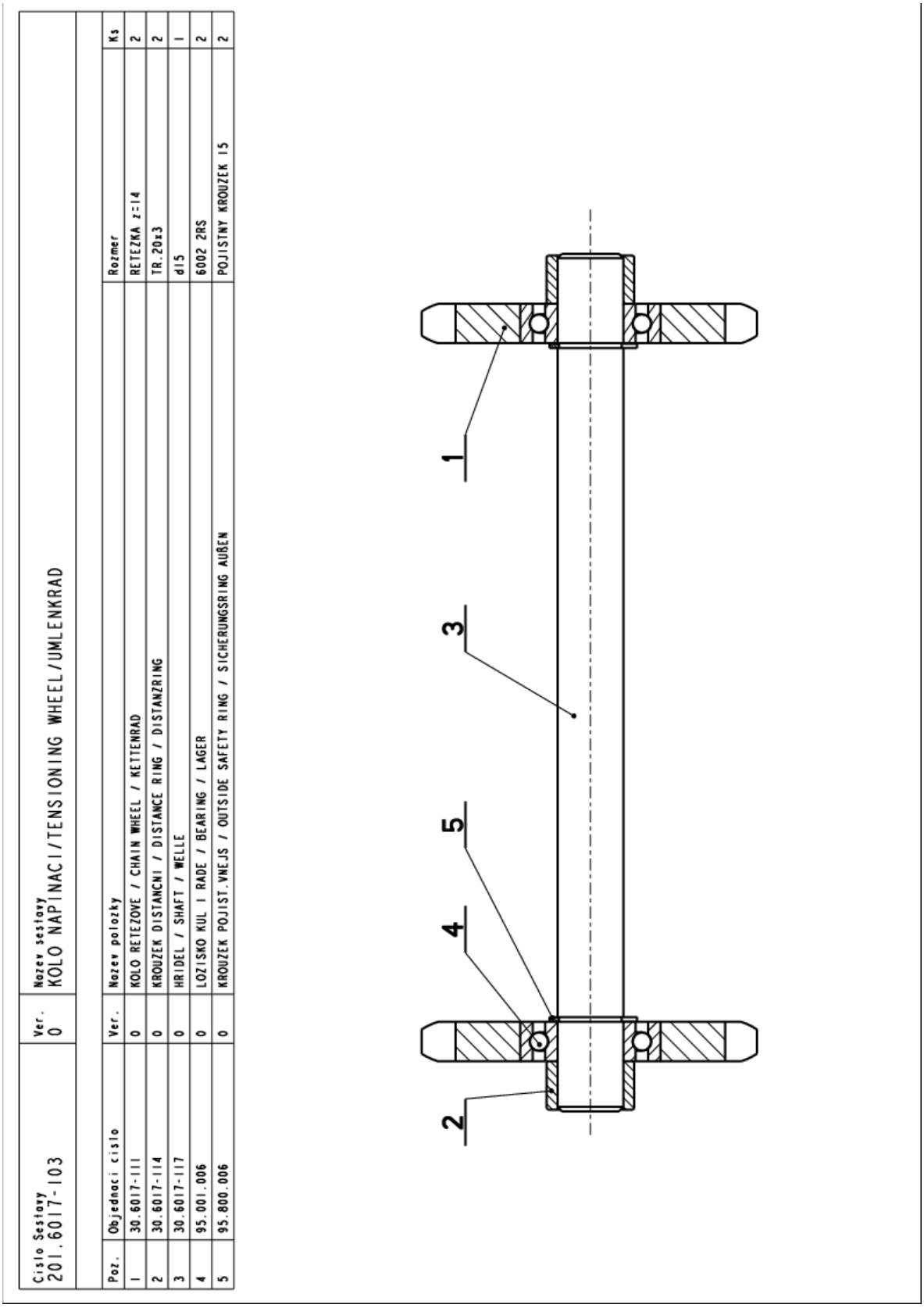

7.42. Pohon / Drive / Antrieb

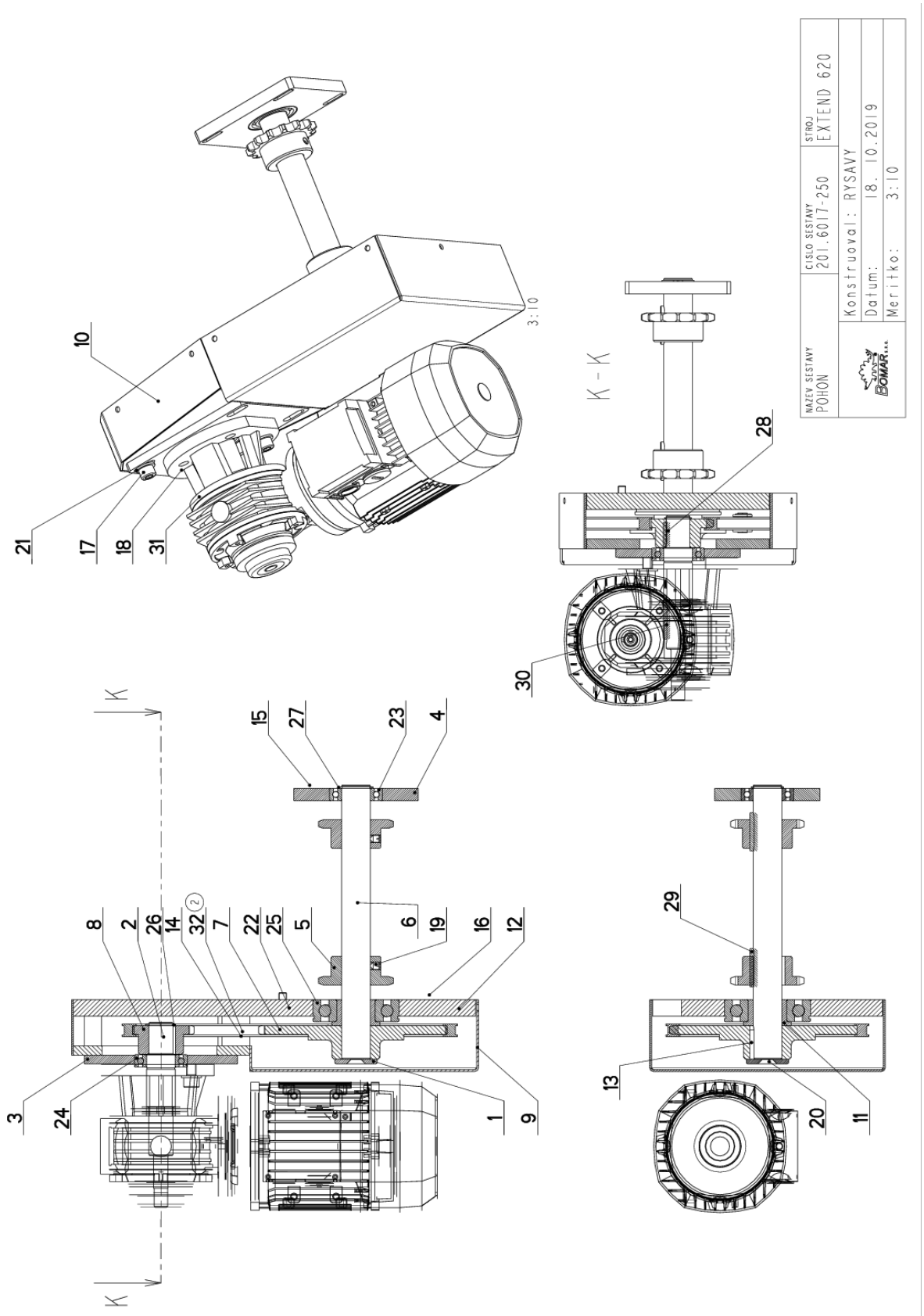

7.43. Kusovník / Piece list / Stückliste - Pohon / Drive / Antrieb

Cislo Sestavy	Ver.	Nazev sestavy
201.6017-250	2	POHON/DRIVE /ANTRIEB

Poz.	Objednaci cislo	Ver.	Nazev polozky	Rozmer	Ks
1	30.1502-465	0	PODLOZKA / WASHER / UNTERLEGSCHEIBE	d 45	1
2	30.6017-203	1	HRIDEL / SHAFT / WELLE	D 32	1
3	30.6017-206	0	DESKA / BOARD / PLATTE	HR 130x10	1
4	30.6017-207	0	DESKA / BOARD / PLATTE	HR 130x15	1
5	30.6017-208	0	KOLO RETEZOVE / CHAIN WHEEL / KETTENRAD	RET.KOLO z=14	2
6	30.6017-209	0	HRIDEL / SHAFT / WELLE	D 30	1
7	30.6017-211	0	KOLO RETEZOVE / CHAIN WHEEL / KETTENRAD	10B-1	1
8	30.6017-212	0	KOLO RETEZOVE / CHAIN WHEEL / KETTENRAD		1
9	30.6017-213	0	KRYT / COVER / ABDECKUNG	P 2x334	1
10	30.6017-214	0	KRYT / COVER / ABDECKUNG	P 2x58	1
11	30.6017-215	1	KROUZEK DISTANCNI / DISTANCE RING / DISTANZRING	D 50	1
12	30.6017-216	0	DRZAK / HOLDER / HALTER	SVARENO	1
13	30.6017-218	0	PERO / SPRING / FEDER	PERO 8x10	1
14	49.200.027	0	RETEZ / CHAIN / KETTE	10B-1	1
15	90.001.25.018	0	SROUB IMBUS / ALLEN HEAD BOLT / IMBUSSCHRAUBE	M6X20	4
16	90.001.25.031	0	SROUB IMBUS / ALLEN HEAD BOLT / IMBUSSCHRAUBE	8x16	4
17	90.001.25.046	0	SROUB IMBUS / ALLEN HEAD BOLT / IMBUSSCHRAUBE	M10X20	4
18	90.001.25.106	0	SROUB IMBUS / ALLEN HEAD BOLT / IMBUSSCHRAUBE	M10X22	4
19	90.003.20.010	0	SROUB STAVECI / ADJUSTMENT BOLT / STELLSCHRAUBE	SROUB M8X10	2
20	90.011.27.008	0	ZAPUSTNY IMBUS / COUNTERSINK BOLT / SENKSCHRAUBE	SROUB M10X20	1
21	90.150.50.006	0	PODLOZKA / WASHER / UNTERLEGSCHEIBE	PODLOZKA 10,5	8
22	90.163.00.002	0	PODLOZKA / WASHER / UNTERLEGSCHEIBE	PODLOZKA 8	4
23	95.001.009	0	LOZISKO / BEARING / LAGER	6006 2RS	1
24	95.003.005	0	LOZISKO / BEARING / LAGER	6006AN	1
25	95.003.006	0	LOZISKO / BEARING / LAGER	6308AN	1
26	95.800.012	0	SEGR HRIDEL. / OUTSIDE SAFETY RING / SICHERUNGSRING AUSSEN	POJISTNY KROUZEK 25	1
27	95.800.013	0	SEGR HRIDEL. / OUTSIDE SAFETY RING / SICHERUNGSRING AUSSEN	POJISTNY KROUZEK 30	1
28	95.810.007 (1)	0	PERO TESNE / TIGHT SPRING / PASSFEDER	PERO 8X7X25	1
29	95.810.010	0	PERO TESNE / TIGHT SPRING / PASSFEDER	PERO 10X8X40	3
30	95.810.016	0	PERO TESNE / TIGHT SPRING / PASSFEDER	PERO 8X7X40	1
31	99.001.073	0	PREVODOVKA / TRANSMISSION / GETRIEBE	VF 49 L2 F2 60 P71 B14 B8	1
32	99.270.001 (2)	0	CLANEK SPOJ.-RETEZ / JOINT CUT ELEMENT / KETTENVERBINDUNGSGLIED	10B-1	1

1.PRIDANO 1xPERO 8x7x25 95.810.007. 228/ZM223 9.8.2008 SLEZACKOVA
2.PR.SPOJKA 99.270.001. 301/ZM425 18.10.2019 KOSYK

Cislo Sestavy/Number of assembly/Nummer der Baugruppe; Verze (Ver.)/Version/Version; Nazev sestavy/Assembly title/Name der Baugruppe; Pozice (Poz.)/Position/Position; Objednaci cislo/Purchase order number/Bestellnummer; Nazev polozky/Volume title/Name der Position; Rozmer/Stock size/Abmessung

7.44. Řetěz / Chain / Kette

Cislo Sestavy 201.6717-304	Ver. 1	Nazev sestavy RETEZ/CHAIN/KETTE		
Poz.	Objednaci cislo	Ver.	Nazev polozky	Rozmer	Ks
1	30.6017-115	0	STERAC / WIPER / ABSTREIFER	PROFIL 30x30x3	1
2	30.6717-305	0	RETEZ POHONOVY / DRIVE BELT / ANTRIEBSKETTE	210BK3 (1 1/4x3/8)+qn	2
3	90.005.55.002	0	6 HR SROUB ZIN / 6 SIDED BOLT / SECHSKANTSCHRAUBE	SROUB M5X10	4
4	90.100.08.005	0	MATICE / NUT / MUTTER	M5	4

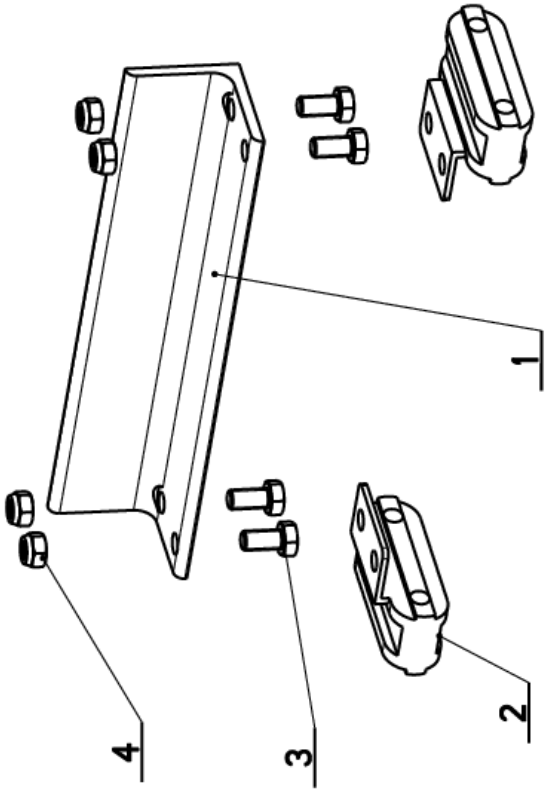

7.45. Rošt / Grill / Gitter

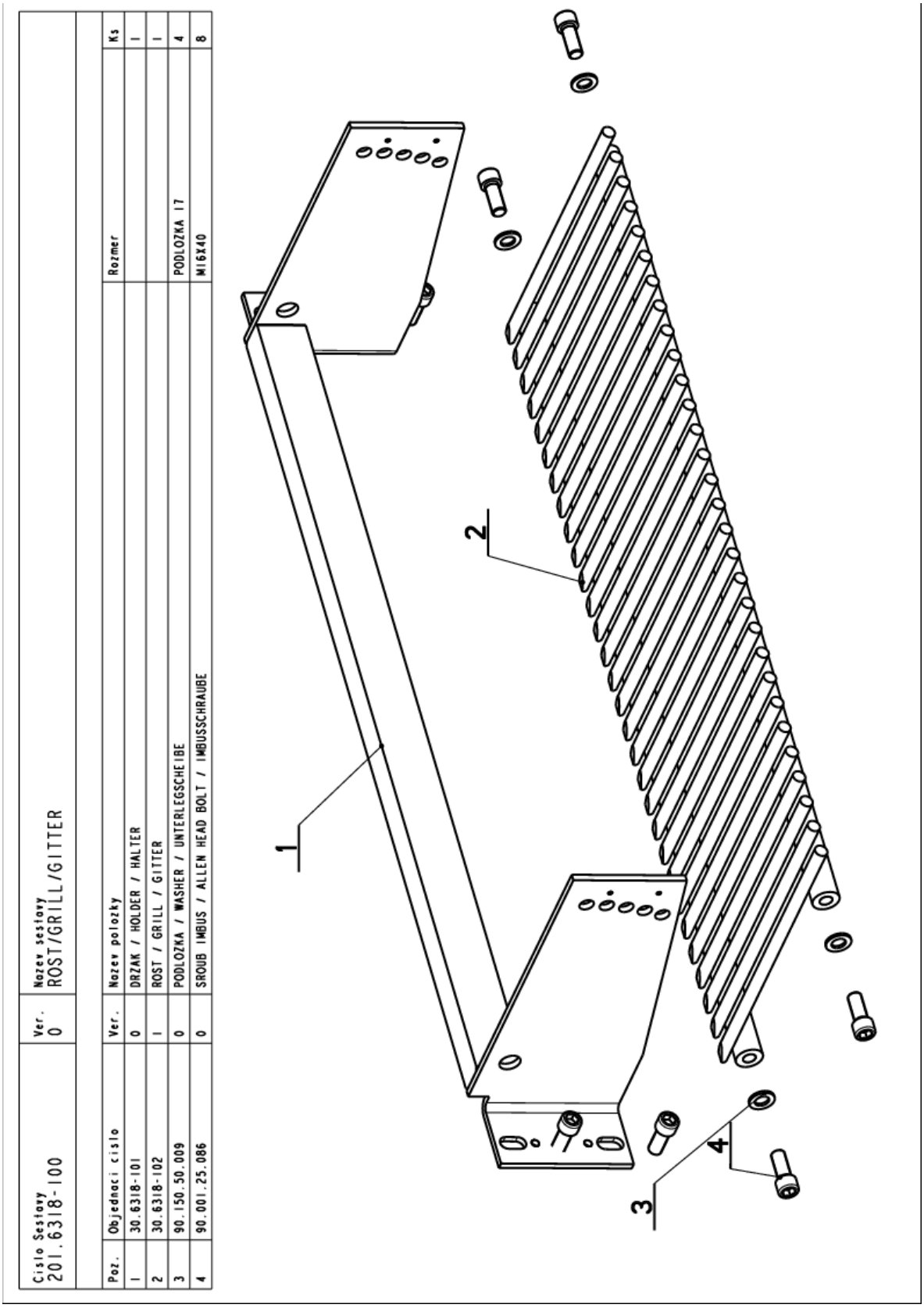

Cislo Sestavy	Ver.	Nazev sestavy
201.6318-100	0	ROST/GRILL/GITTER

Poz.	Objednaci cislo	Ver.	Nazev polozky	Rozmer	Ks
1	30.6318-101	0	DRZAK / HOLDER / HALTER		1
2	30.6318-102	1	ROST / GRILL / GITTER		1
3	90.150.50.009	0	PODLOZKA / WASHER / UNTERLEGSCHEIBE	PODLOZKA 17	4
4	90.001.25.086	0	SROUB IMBUS / ALLEN HEAD BOLT / IMBUSSCHRAUBE	M16X40	8

7.46. Ovladací panel / Control panel / Bedienpult

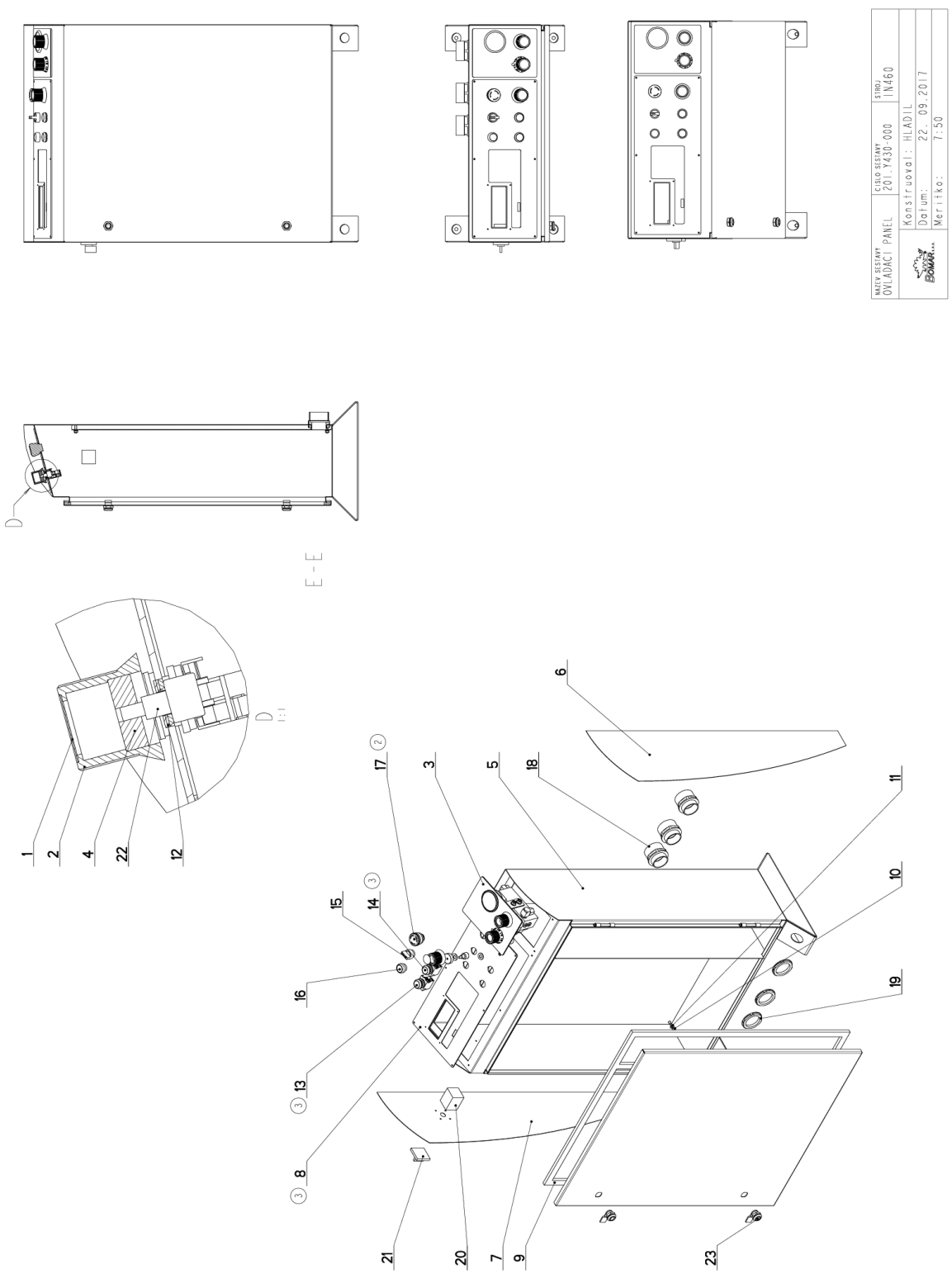

7.47. Kusovník / Piece list / Stückliste - Ovladací panel / Control panel / Bedienpult

Cislo Sestavy	Ver.	Nazev sestavy
201.Y430-000	3	OVLADACI PANEL/CONTROL PANEL/BEDIENPULT

Poz.	Objednaci cislo	Ver.	Nazev polozky	Rozmer	Ks
1	30.6130-012	0	VIKO / COVER / DECKEL	P 0,5x30	3
2	31.6130-008	0	HLAVICE / HEAD / KOPF		1
3	201.R230-220	1	OVLADACI PANEL / CONTROL PANEL / BEDIENPULT		1
4	30.R230-010	0	MEZIKUS / INTERMEDIATE PIECE / PASSSTÜCK	d 32	1
5	30.R230-201	4	SKRIN / BOX / KASTEN		1
6	30.R230-204	0	PLECH / PLATE / BLECH	P 1x220	1
7	30.R230-206	1	PLECH / PLATE / BLECH	P 1x220	1
8	31.R230-207 (3)	0	PANEL ELEKTRO / ELECTRO PANEL / PANEL	P 3x205	1
9	61.352.001	0	TESNENI / SEALING / DICHTUNG	TESNENI 19x10	1
10	90.100.55.004	0	MATICE / NUT / MUTTER	MATICE _ M6	4
11	90.150.50.004	0	PODLOZKA / WASHER / UNTERLEGSCHEIBE	PODLOZKA 6,4	4
12	90.150.50.006	0	PODLOZKA / WASHER / UNTERLEGSCHEIBE	PODLOZKA 10,5	2
13	91.060.031 (3)	0	SPINAC / SWITCH / SCHALTER	zelene - prosveltlene	1
14	91.060.035 (3)	0	SPINAC / SWITCH / SCHALTER	cerne	1
15	91.060.051	0	PREPINAC / SWITCH / UMSCHALTER		1
16	91.060.053	0	HLAVICE / HEAD / KOPF		1
17	91.060.084 (2)	0	HLAVICE TOTAL STOP / TOTAL STOP HEAD / TASTE TOTAL STOP		1
18	91.071.022	0	VYVODKA / BUSHING / TÜLLE		3
19	91.072.016	0	MATICE / NUT / MUTTER		3
20	91.170.003	0	SPINAC VACKOVY / CAM SWITCH / SCHALTER	LE2-12-1763	1
21	91.180.001	0	DESKA SPINACE / ELECTRIC BOARD / PLATINE		1
22	91.283.015	0	POTENCIOMETR / POTENTIOMETER / POTENTIOMETER	TP 195 4K7/N 20A	1
23	99.104.002	0	ZAMEK / LOCK / SCHLOSS	ZAMEK CINSKY	2

1.ZRUS.VIKO 30.R230-203,PANEL 30.R230-202,2xCEP 30.7217-028,2XPOJ.KROUZEK 95.802.003 (PRIDANO DO SKRINE 30.R230-201). 061/ZM110 29.3.2012 SLEZACKOVA

2.ZRUS.HLAVICE TOTAL STOP 91.060.030 A NAHR.91.060.084 147/ZM184 2.7.2013 SLEZACKOVA

3.ZRUS PANEL ELEKTRO 251.654 A NAHR. 31.R230-207,ZRUS TLACITKA 91.060.034 A 91.060.055 A 91.060.054 A 91.060.033, PRID. TLACITKA 91.060.031 A 91.060.035 201/ZM304 22.9.2017 CERNY

Cislo Sestavy/Number of assembly/Nummer der Baugruppe; Verze (Ver.)/Version/Version; Nazev sestavy/Assembly title/Name der Baugruppe; Pozice (Poz.)/Position/Position; Objednaci cislo/Purchase order number/Bestellnummer; Nazev polozky/Volume title/Name der Position; Rozmer/Stock size/Abmessung

7.48. Ovladací panel / Control panel / Bedienpult

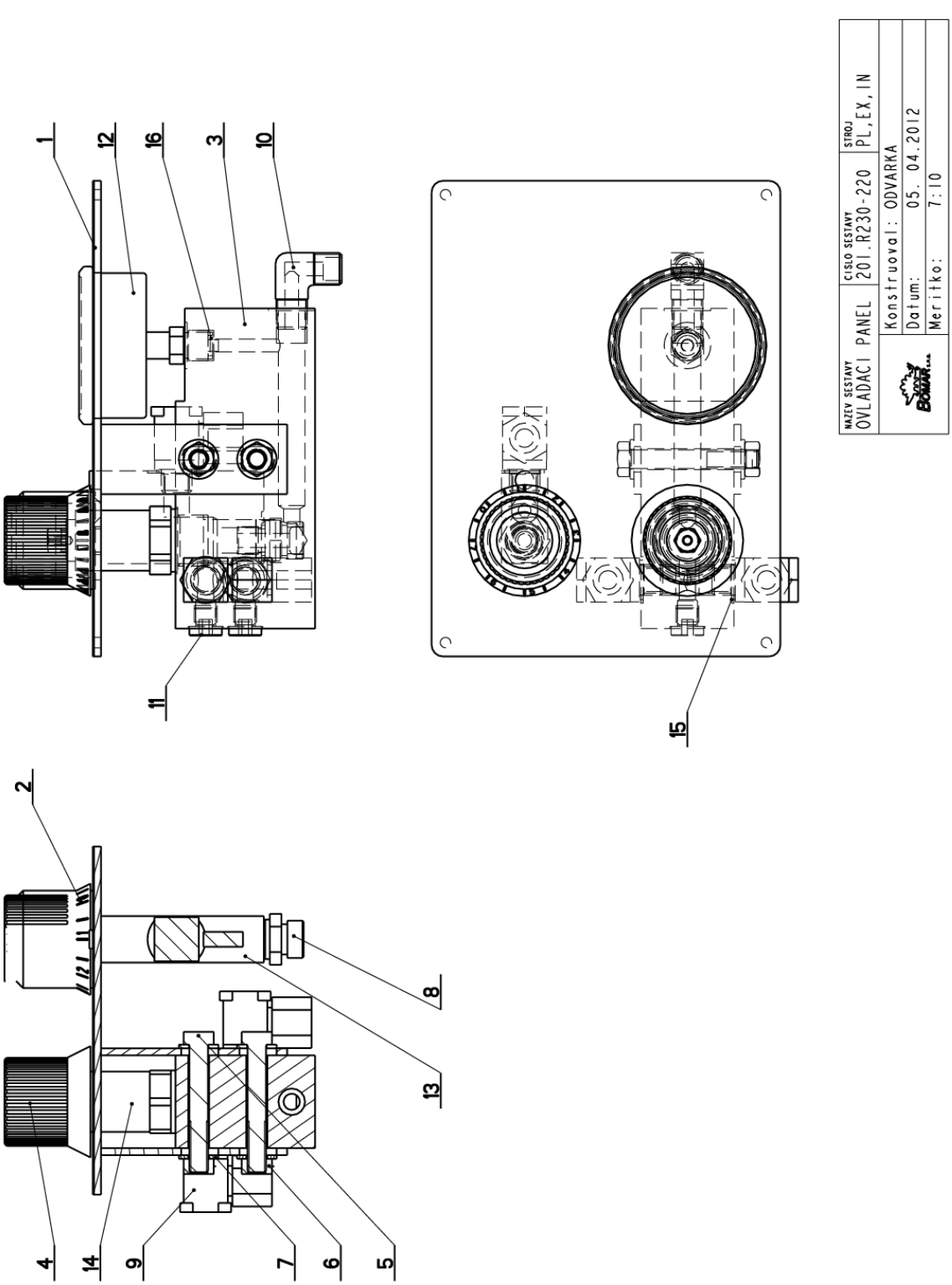

7.49. Kusovník / Piece list / Stückliste - Ovladací panel / Control panel / Bedienpult

Cislo Sestavy	Ver.	Nazev sestavy
201.R230-220	1	OVLADACI PANEL/CONTROL PANEL/BEDIENPULT

Poz.	Objednaci cislo	Ver.	Nazev polozky	Rozmer	Ks
1	251.652	0	PANEL / PANEL / PANEL		1
2	30.6130-018	0	HLAVICE / HEAD / KOPF	VYLISEK	1
3	30.6130-103	2	KOSTKA REGULACE / REGULATION CUBE / REGELUNGSWÜRFEL	TYC 60x40	1
4	31.6130-008	0	HLAVICE / HEAD / KOPF		1
5	90.005.55.064	0	SROUB 6HRANNY / 6 SIDED BOLT / SECHSKANTSCHRAUBE	SROUB M8X55	2
6	90.100.55.005	0	MATICE / NUT / MUTTER	MATICE _ M8	2
7	90.150.50.005	0	PODLOZKA / WASHER / UNTERLEGSCHEIBE	PODLOZKA 8,4	4
8	92.002.103	0	SROUBENI PRIME / DIRECT BOLTING / GERADE VERSCHRAUBUNG	G 1/4" tr12	1
9	92.003.001	0	SROUBENI UHLOVE / ANGLE BOLTING / WINKELVERSCHRAUBUNG	P-RSWS-08LR	3
10	92.004.001	0	SROUBENI UHLOVE / ANGLE BOLTING / WINKELVERSCHRAUBUNG	37701	1
11	92.019.003	0	ZATKA / PLUG / STOPFEN	G1/4" VNITRNI IMBUS	2
12	92.080.002	0	MANOMETR / MANOMETER / MANOMETER	d 63 - 60bar	1
13	92.152.001	0	VENTIL SKRTICI / CHOKE VALVE / DROSSELVENTIL	VS01-04/R 2.5-0	1
14	92.154.001	0	VENTIL REDUKCNI / REDUCTION VALVE / DRUCKMINDERUNGSVENTIL		1
15	96.082.002	0	TESNENI / SEALING / DICHTUNG	KROUZEK CU 13/17	4
16	96.082.005	0	KROUZEK TESNICI / SEAL RING / DICHTUNGSRING	5x8.8x1	2

Cislo Sestavy/Number of assembly/Nummer der Baugruppe; Verze (Ver.)/Version/Version; Nazev sestavy/Assembly title/Name der Baugruppe; Pozice (Poz.)/Position/Position; Objednaci cislo/Purchase order number/Bestellnummer; Nazev polozky/Volume title/Name der Position; Rozmer/Stock size/Abmessung

NAZEV SESTAVY		CISLO SESTAVY									STROJ
PRISLUSENSTVI		202.6320-000			Datum: 27. 06.2007			1		KS/ST	EX820
					Zhotovil: RYSAVY						
cislo vykresu	nazev	rozmer	delka	mat.vych	mat.kon.	pov.upr.	c.hm	ks	pozice sklad	puvod	Poznamka
202.6121-000 (2)	LASER-UKAZOVATKO							1			
202.6314-700	UPINANI HORNI							1			
201.6317-100	VYNASEC TRISKOVY							1			
30.6314-280	KORYTO							1			
202.6310-150 (1)	VEDENI PASU	PAS 67x1,6						1			
30.6030-419 (3)	PANEL ELEKTRO										
201.6305-400 (4)	POHON	POHON 9,2 kW									

1.PRIDANA SOUCAST 202.6310-150 6.3.2008 RYSAVY ZM061

2.ZRUS.LASER-UKAZOVATKO 202.6120-101 A NAHR. 202.6121-000. 211/ZM245 9.12.2009 SLEZACKOVA

3.PRIDAN PANEL ELEKTRO 30.6030-419. 334/ZM007 12.1.2011 SLEZACKOVA

4.PRIDAN POHON 201.6305-400 (POHON 9,2 kW). 220/ZM279 11.10.2011 SLEZACKOVA

7.50.1. Pohon / Drive / Antrieb

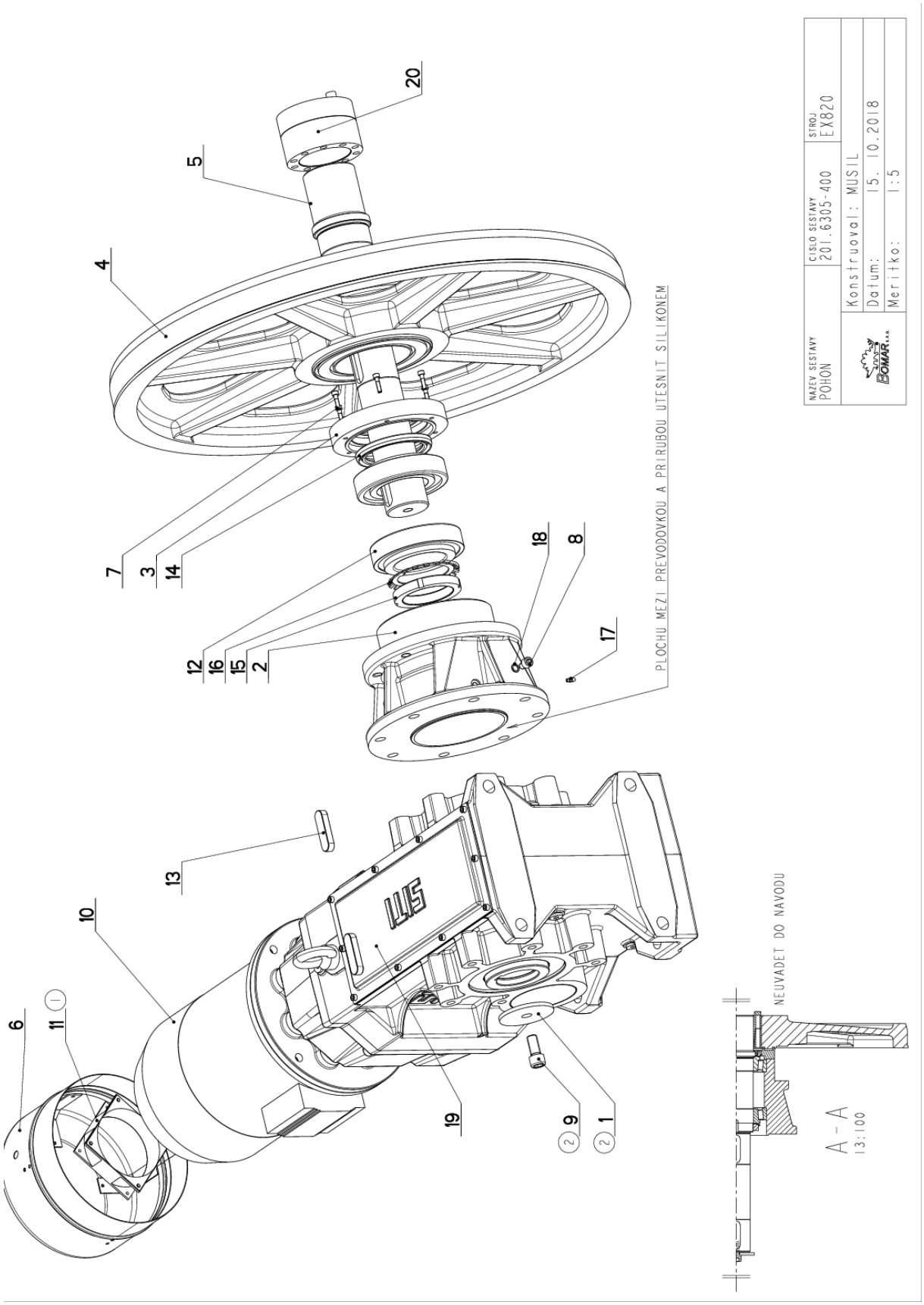

7.50.2. Kusovník / Piece list / Stückliste - Pohon / Drive / Antrieb

Cislo Sestavy	Ver.	Nazev sestavy
201.6305-400	2	POHON/DRIVE /ANTRIEB

Poz.	Objednaci cislo	Ver.	Nazev polozky	Rozmer	Ks
1	30.1804-106 (2)	0	PODLOZKA / WASHER / UNTERLEGSCHEIBE	P 6x90	1
2	30.6205-402	2	PRIRUBA / FLANGE / FLANSCHE		1
3	30.6205-407	1	VIKO / COVER / DECKEL	P 30x192	1
4	30.6305-007	1	KOLO HNACI / DRIVE WHEEL / ANTRIEBSRAD		1
5	30.6305-301	0	HRIDEL / SHAFT / WELLE	D 100	1
6	30.6704-018	4	VENTILATOR / VENTILATOR / VENTILATOR		1
7	90.001.25.019	0	SROUB IMBUS / ALLEN HEAD BOLT / IMBUSSCHRAUBE	M6X25	6
8	90.001.25.043	0	SROUB IMBUS / ALLEN HEAD BOLT / IMBUSSCHRAUBE	M10X12	1
9	90.001.25.075 (2)	0	SROUB IMBUS / ALLEN HEAD BOLT / IMBUSSCHRAUBE	M16X35	1
10	91.001.081	0	ELEKTROMOTOR / ELECTRIC MOTOR / ELEKTROMOTOR	9,2kW,4P,B5,Vel132	1
11	91.015.126 (1)	0	VENTILATOR / VENTILATOR / VENTILATOR	VENTILATOR RDH1238,B2	1
12	95.300.018	0	LOZISKO KUZELIK / BEARING / LAGER	32217A	2
13	95.810.041	0	PERO TESNE / TIGHT SPRING / PASSFEDER	PERO 20X12X70	2
14	95.830.009	0	GUFERO / GIT SEAL / DICHTUNG	GUFERO 95X125X12	1
15	95.850.012	0	MATICE KM / KM NUT / KM-MUTTER	MATICE KM17	1
16	95.855.011	0	PODLOZKA / WASHER / UNTERLEGSCHEIBE	POJISTNA PODLOZKA MB17	1
17	95.860.001	0	MAZNICE / LUBRICATOR / ÖLER	KULOVA PRIMA M5	1
18	96.082.001	0	KROUZEK TESNICI / SEAL RING / DICHTUNGSRING	10/14x1.5 CU	1
19	99.003.024	0	PREVODOVKA KUZELOCEL / CONICAL TRANSMISSION / KEGELRADGETRIEBE	MBH140C PAM132	1
20	99.710.013	0	SPOJKA / JOINT / KUPPLUNG	85x125	1

1.ZRUS.VENTILATOR 91.015.100 A NAHR.91.015.126. 074/ZM018 11.2.2014 SLEZACKOVA

2.ZRUS. PODLOZKA 30.1804-005 A NAHR. PODLOZKOU 30.1804-106, ZRUS. SROUB M16x35 90.011.27.040 A NAHR. 90.001.25.075. 226/ZM370 15.10.2018 SZABARI

Cislo Sestavy/Number of assembly/Nummer der Baugruppe; Verze (Ver.)/Version/Version; Nazev sestavy/Assembly title/Name der Baugruppe; Pozice (Poz.)/Position/Position; Objednaci cislo/Purchase order number/Bestellnummer; Nazev polozky/Volume title/Name der Position; Rozmer/Stock size/Abmessung

7.50.3. Vynašeč třískový / Chip extractor / Spanabführung

Cislo Sestavy
201.6317-100

Ver.
2

Nazev sestavy
VYNASEC TRISKOVY/CHIP EXTRACTOR/SPANABFÜHRUNG

Poz.	Objednaci cislo	Ver.	Nazev polozky	Rozmer	Ks
1	201.6017-103	0	KOLO NAPINACI / TENSIONING WHEEL / UMLENKRAD		1
2	201.6017-250	1	POHON / DRIVE / ANTRIEB		1
3	201.6717-304	1	RETEZ / CHAIN / KETTE		12
4	30.6317-122	2	KRYT / COVER / ABDECKUNG		1
5	30.6317-201	0	KORYTO / CHANNEL / RINNE		1
6	90.005.55.012	0	SROUB 6HRANNY / 6 SIDED BOLT / SECHSKANTSCHRAUBE	SROUB M6X40	2
7	90.100.55.004	0	MATICE / NUT / MUTTER	MATICE - M6	2

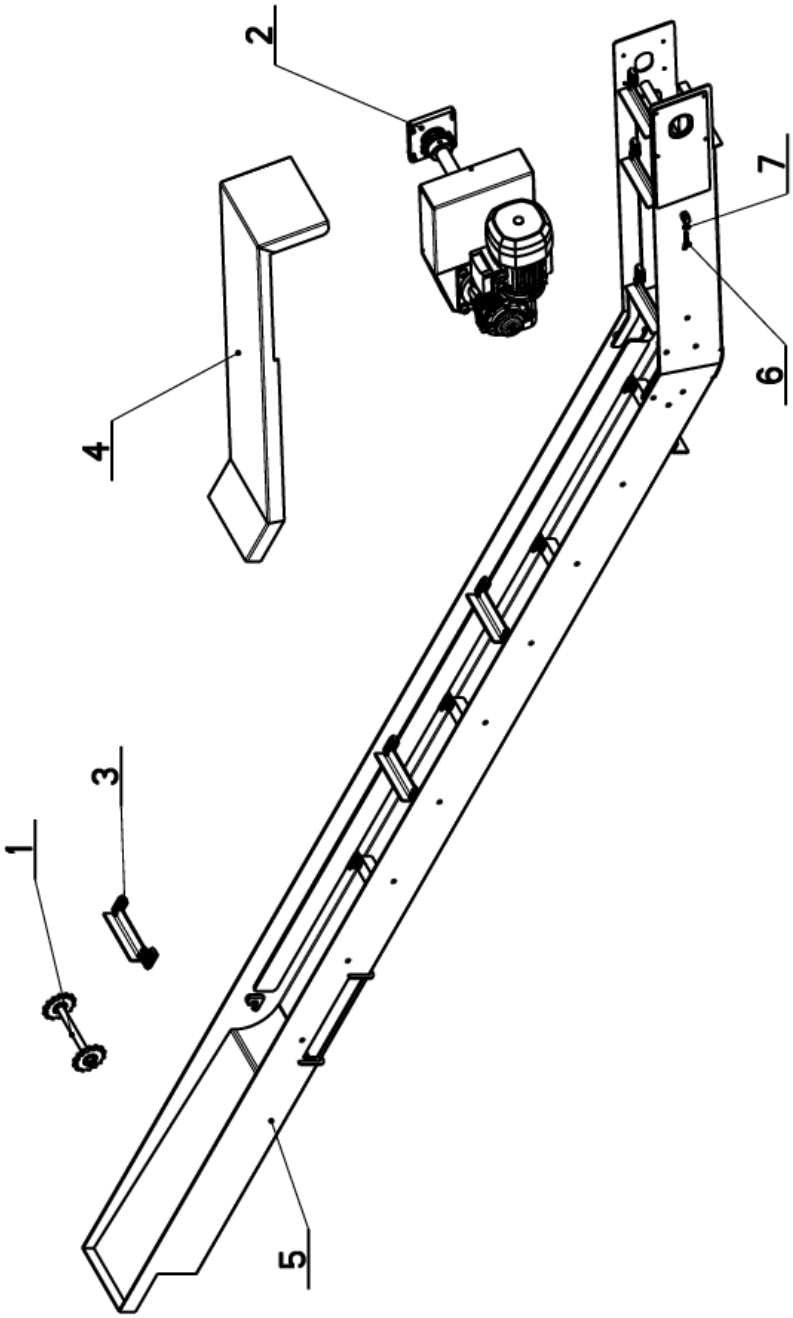

7.50.4. Laserové-ukazovátko / Laser / Laser

Cislo Sestavy	Ver.	Nazev sestavy
202.6121-000	0	LASER-UKAZOVATKO/LASER/LASER

Poz.	Objednaci cislo	Ver.	Nazev polozky	Rozmer	Ks
1	30.6120-001	1	DRZAK / HOLDER / HALTER	DRZAK LASERU	1
2	202.5012-000	0	LASER-UKAZOVATKO / LASER / LASER		1

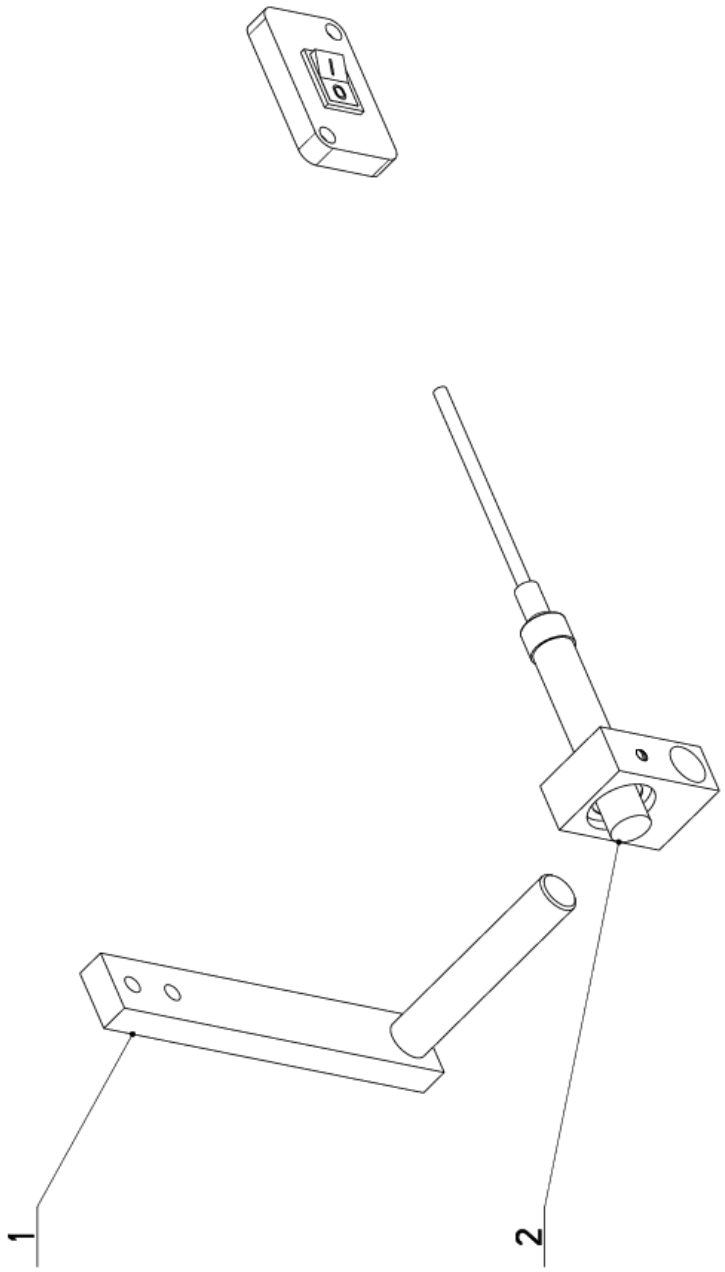

Cislo Sestavy/Number of assembly/Nummer der Baugruppe; Verze (Ver.)/Version/Version; Nazev sestavy/Assembly title/Name der Baugruppe; Pozice (Poz.)/Position/Position;
Objednaci cislo/Purchase order number/Bestellnummer; Nazev polozky/Volume title/Name der Position; Rozmer/Stock size/Abmessung

7.50.5. Vedení pásu / Belt guide / Sagebandfuhrung

Cislo Sestavy
202.6310-150

Ver.
1

Nazev sestavy
VEDENI PASU/BELT GUIDE/SAGEBANDFUHRUNG

Poz.	Objednaci cislo	Ver.	Nazev polozky	Rozmer	Ks
1	201.6410-050	2	KOSTKA VODICI / LEAD CUBE / FÜHRUNGSKLÖTZ		1
2	201.6410-060	2	KOSTKA VODICI / LEAD CUBE / FÜHRUNGSKLÖTZ		1
3	30.6305-107	0	KOLO HNACI / DRIVE WHEEL / ANTRIEBSRAD		1
4	30.6308-106	0	KOLO NAPINACI / TENSIONING WHEEL / UMLENKRAD		1
5	30.6310-108	0	PAS / BELT / BAND	67x1,6	1

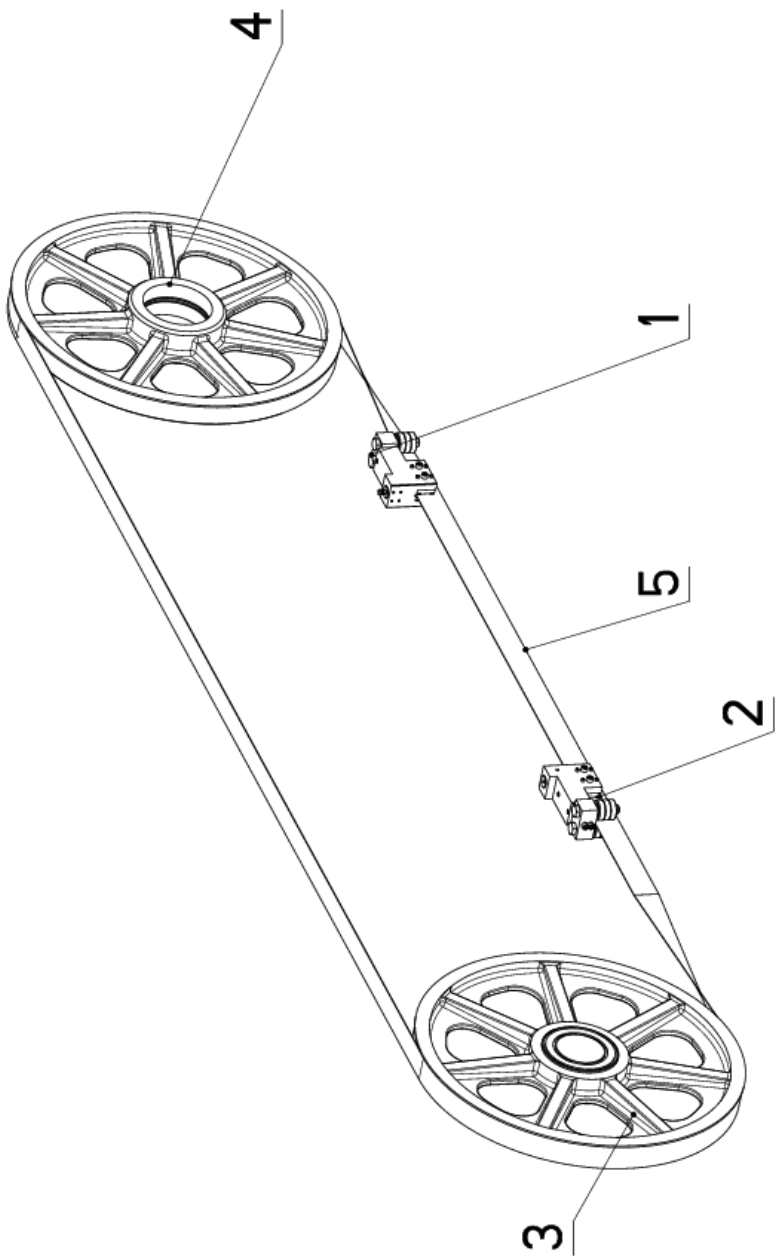

Cislo Sestavy/Number of assembly/Nummer der Baugruppe; Verze (Ver.)/Version/Version; Nazev sestavy/Assembly title/Name der Baugruppe; Pozice (Poz.)/Position/Position;
Objednaci cislo/Purchase order number/Bestellnummer; Nazev polozky/Volume title/Name der Position; Rozmer/Stock size/Abmessung

7.50.6. Upínání horní / Top clam / Spannvorrichtung oben

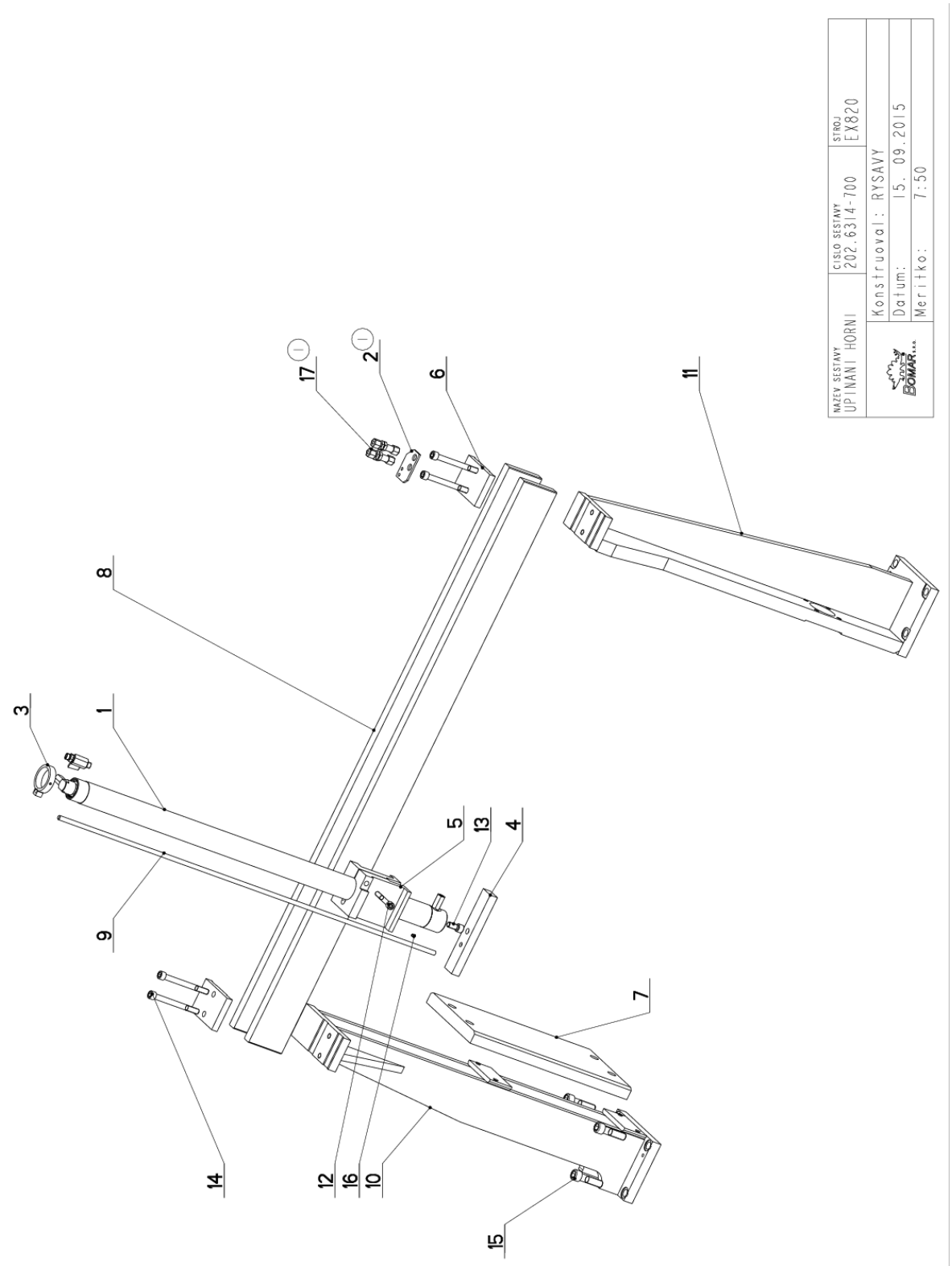

7.50.7. Kusovník / Piece list / Stückliste -
Upínání horní / Top clam / Spannvorrichtung oben

Cislo Sestavy	Ver.	Nazev sestavy
202.6314-700	1	UPINANI HORNI/TOP CLAM/SPANNVORRICHTUNG OBEN

Poz.	Objednaci cislo	Ver.	Nazev polozky	Rozmer	Ks
1	201.6307-500	1	VALEC UPINACI / FIXING CYLINDER / SPANNZYLINDER		1
2	30.1816-210 (1)	0	DRZAK / HOLDER / HALTER	P 4x50	1
3	30.2014-107	0	DRZAK / HOLDER / HALTER		1
4	30.2014-108	1	DESKA / BOARD / PLATTE	HR 40x20	1
5	30.6214-406	0	KOSTKA / CUBE / WURFEL	HR 100x100	1
6	30.6214-505	1	DESKA / BOARD / PLATTE	TYC 120x15	2
7	30.6314-706	0	CELIST / JAW / BACKE	P 30 - 250	1
8	30.6314-707	0	LISTA / TRIM / LEISTE	HR.90x25	2
9	30.6314-708	0	TYC ODMEROVANI / MEASURING POLE / ABMESSUNGSSTANGE	TYC 10	1
10	30.6314-709	0	SLOUP / POLE / SAULE		1
11	30.6314-710	1	KONZOLA / CONSOLE / KONSOLE		1
12	90.001.25.055	0	SROUB IMBUS / ALLEN HEAD BOLT / IMBUSSCHRAUBE	M10X70	1
13	90.001.25.057	0	SROUB IMBUS / ALLEN HEAD BOLT / IMBUSSCHRAUBE	M12x25	1
14	90.001.25.066	0	SROUB IMBUS / ALLEN HEAD BOLT / IMBUSSCHRAUBE	M12X120	4
15	90.001.25.092	0	SROUB IMBUS / ALLEN HEAD BOLT / IMBUSSCHRAUBE	M16X60	4
16	90.003.20.003	0	SROUB STAVECI / ADJUSTMENT BOLT / STELLSCHRAUBE	SROUB M5X12	1
17	92.008.101 (1)	0	SROUBENI / BOLTING / VERSCHRAUBUNG	G 1/4"	2

1.PRIDANO 1xDRZAK 30.1816-210, PRUCHODKA 92.008.101. 375/ZM415 2.11.2007 SLEZACKOVA

Cislo Sestavy/Number of assembly/Nummer der Baugruppe; Verze (Ver.)/Version/Version; Nazev sestavy/Assembly title/Name der Baugruppe; Pozice (Poz.)/Position/Position;
Objednaci cislo/Purchase order number/Bestellnummer; Nazev polozky/Volume title/Name der Position; Rozmer/Stock size/Abmessung