Serie **Individual**

Individual 820.640 DGH

Operating instructions

Before transporting and using the machine, please read the instructions thoroughly!

Seriové číslo / Serien Nummer / Serial Number _____

Service and information

Your BOMAR dealer:

Direct BOMAR contact:

BOMAR spol. s r.o.
Těžební 1236/1
62700 Brno
Czech Republic, EU

telefon: +420 – 533 426 100
fax: +420 – 533 426 109
e-mail: info@bomar.cz
www: http://www.bomar.cz

We are available:

Mondays to Fridays 7^{00} – 16^{00}

Version:

1.51 / Sept. 2021

rev. 1

BOMAR, spol. s r.o. © – Subject to modifications and amendments.

EC/EU Declaration of Conformity

1) We:

BOMAR, spol. s r.o.
Těžební 1236/1
627 00 Brno, Czech Republic
Id. No: 48908827
declare herewith

that the following designated device based on its conception and construction as well as the design launched by us meets the relevant basic safety requirements of the decrees of the government.This statement applies exclusively to the machine device in conditions in which it was brought to the market. It does not apply to parts subsequently added by the end user or to modifications performed subsequently by the end user. In the event of any device modification not approved by us this declaration shall lose its validity

Name:	**Band Saw**
Type :	**Individual 820.640 DGH**
Serial number:	011 – 100 000
Manufacturer	**BOMAR, spol. s r.o., Těžební 1236/1, 627 00 Brno**
Product data	
Determination:	for cross dividing and cutting of rolled and towed bars and profiles made of steel, stainless steel, non-ferrous metals and plastics
Description:	Stand, table, cutting unit with the arm, saw band and drive, hand clamping device, cooling system, machine control
	Pneumatic *NO* ☒ *YES* ☐ Hydraulic *NO* ☐ *YES* ☒ Control system *NO* ☐ *YES* ☒
Technical data:	Cutting rate 20–120 m.min-1
	Cutting angle -60° to 60°
	Total dimensions in mm (lxwxh) 3750x4050x2700
	Total power requirement 10,5 kW
	Weight 2500 kg

Documentation:
Technical documentation for this machine device was elaborated in compliance with Government regulation no. 176/2008, Annex 7, part A.

The device meets relevant requirements of the given directives: **2006/42/ES**
2014/30/EU

The applied harmonized standards, National standards and technical specifications:

ČSN EN ISO 12100:2011	ČSN EN ISO 16093:2018	ČSN EN ISO 13857:2021
ČSN EN ISO 4413:2011		ČSN EN 60204 -1 ed.3:2019
ČSN EN 55011 ed.4+A1:2017	ČSN EN 61000-6-2 ed.3:2006	ČSN EN 61000-6-4 ed.2+A1:2011

The product is safe on condition of the common and determined usage.

The conformity judging was performed according to §12, art..3a), of the Law no. 22/1997 Coll. as amended.

Brno, 02.06.2021
Point of issue, datum

BOMAR, spol. s r.o.
Těžební 1236/1, 627 00 Brno
Czech Republic
IČO: 48908827
DIČ: CZ48908827

Alfred Pichlmann, Managing Director
Name and function of the responsible subject, signature

Person authorized to complete the technical documentation:: BOMAR, spol. s r. o., Těžební 1236/1, 627 00 Brno

1) Name, address and identification number of the subject issuing the conformity declaration (producer of importer)
2) The authorized or accredited body co-operating on the conformity judging

!	If the equipment is installed without safety equipment offered by BOMAR, spol. s ro or its agents and used by the customer (or buyer) then EC declaration loses validity. EC Declaration of conformity is valid only if customer (buyer) installed the BOMAR safety equipment with the machine or with some other with equivalent safety device in accordance with current applicable regulations and standards. All machine elements and components that were built into the device by BOMAR, spol. s ro have been declared "identical" to a safety device, as offered by BOMAR, spol. s ro or its agents.

Declaration of Incorporation of partly completed machinery

[1) 2)] We:

BOMAR, spol. s r.o.
Těžební 1236/1
627 00 Brno, Czech Republic
Id. No: 48908827

declare herewith

that the following designated device based on its conception and construction as well as the design launched by us meets the relevant basic safety requirements of the decrees of the government.

This statement applies exclusively to the machine device in conditions in which it was brought to the market. It does not apply to parts subsequently added by the end user or to modifications performed subsequently by the end user.

In the event of any device modification not approved by us this declaration shall lose its validity

Name: **Band Saw**

Type : **Individual 820.640 DGH without control panel**

Serial number:

Manufacturer **BOMAR, spol. s r.o., Těžební 1236/1, 627 00 Brno**

Product data

Determination: The band saw is intended as a semifinished product for final building at the customer.
The product completed in this way must include corresponding elements ensuring safe use of the device. .

Description: Stand, table, cutting unit with the saw band and drive, clamping device, cooling system

Pneumatic *NE* ☐ *ANO* ☒ Hydraulic *NE* ☐ *ANO* ☒ Control system *NE* ☐ *ANO* ☒

Technical data:

Cutting rate	20–120 m.min-1
Cutting angle	-60° to 60°
Total dimensions in mm (l×w×h)	3750 x 4050 x 2700
Total power requirement	10,5 kW
Weight	2500 kg

Documentation:

Technical documentation for this machine device was elaborated in compliance with Government regulation no. 176/2008, Annex 7, part B.

The device meets relevant requirements of the given directives: **2006/42/ES**
2014/30/EU

The applied harmonized standards, National standards and technical specifications:

ČSN EN ISO 12100:2011	ČSN EN ISO 16093:2018	ČSN EN ISO 13857:2021
ČSN EN ISO 4413:2011	ČSN EN ISO 4414:2011	ČSN EN 60204 -1 ed.3:2019
ČSN EN 55011 ed.4+A1:2017	ČSN EN 61000-6-2 ed.3:2006	ČSN EN 61000-6-4 ed.2+A1:2011

The product is safe on condition of the common and determined usage.

This incomplete machine device may not be put into operation until a certificate of conformity of the complete machine equipment, into which the device is to be incorporated, has been issued

We are committed to provide information on the partly completed machinery to the national authorities – if the request is justified. The documentation will be provided in digital form.

Brno, 02.06..2021
Point of issue, datum

BOMAR, spol. s r.o.
Těžební 1236/1, 627 00 Brno
Czech Republic
IČO: 48908827
DIČ: CZ48908827

Alfred Pichlmann, Managing Director
Name and function of the responsible subject, signature

1) Name, address and identification number of the subject issuing the conformity declaration (producer of importer)
2) Person authorized to complete the technical documentation

Content

1. SAFETY NOTES.....11

1.1. Machine determination.....13
1.2. Protective suit and personal safety.....13
1.3. Safety notes for machine operator.....14
1.4. Safety notes for the servicing and repairs.....14
1.5. Safety machine accessories.....15
1.5.1. Emergency Stop Switch.....15
1.5.2. Arm covers.....15
1.5.3. Saw band stretching and rupture inspection.....16
1.5.4. Band saw cover.....16
1.6. Safety notes for the cooling.....16
1.6.1. Instructions for first help.....16
1.7. Umístění štítku stroje / Maschinenschild position / Position of machine label.....17
1.8. Umístění bezpečnostních značek / Verteilung der Sicherheitszeichen / Position of safety symbols.....18

2. MACHINE DOCUMENTATION.....19

2.1. Technická data / Technische Daten / Technical data.....21
2.2. Rozměrové schéma / Aufstellzeichnung / Installation diagram.....22
2.3. Popis / Beschreibung / Description.....23
2.4. Transportation and stocking.....24
2.4.1. Conditions for transportation and stocking.....24
2.4.2. Transport and stocking preparations.....24
2.4.3. Transport and stocking.....24
2.4.4. Transportní schéma / Transport schema / Transport scheme.....25
2.5. Activation.....26
2.5.1. Machine working conditions.....26
2.6. Band saw unpacking and assembling.....26
2.6.1. Machine installing and levelling.....26
2.6.2. Machine disposal after lifetime.....26
2.6.3. Kotevní plan / Verankerungsplan / Grounding plan.....27
2.7. Electrical connection.....28
2.7.1. Check the direction of the saw band.....28
2.8. Filling of the cooling system.....29
2.9. Check machine function.....29
2.10. Saw band.....30
2.10.1. Saw band size.....30
2.10.2. Selection of the saw band tooth system.....30
2.10.3. Saw band running-in.....30
2.10.4. Tables for teeth selection:.....31

3. MACHINE CONTROL 33

3.1. Starting the band saw.....35
3.2. Control panel.....36
3.2.1. Control panel description.....37
3.3. Machine setup.....38
3.3.1. SERVIS.....39
3.3.2. SETUP.....40
3.4. Machine control - standard.....41
3.4.1. Manual mode.....41
3.4.2. Semi-automatic cycle.....42
3.5. Machine control – automatic setting of the angle of the saw arm (optional accessory).....43
3.5.1. Manual mode.....43
3.5.2. Semi-automatic cycle.....43
3.6. Cycle breaking.....46
3.7. Machine error messages.....46
3.8. Band saw adjusting.....47
3.8.1. Angular cut setting (standard machine).....47
3.8.2. Electronic measuring device (optional accessories).....48
3.8.2.1. Electronic angular cut setting (optional accessory).....50
3.8.2.2. Speed adjustment of the arm lowering (optional accessory).....51
3.8.3. Adjusting band guides.....51
3.8.4. Cutting speed adjusting.....52
3.8.5. Adjustment of pressure to the cut.....52
3.8.6. Speed adjustment of the arm lowering.....53
3.8.7. Saw frame lift stop setting.....53
3.8.8. Saw arm lower position stop adjustment.....54
3.8.9. Brush adjustment.....54
3.9. Material insertion.....55
3.9.1. Handling agent selection.....55

3.9.2. Insertion ... 55
3.9.3. Bundle material cutting ... 55

4. MACHINE SERVICE ... 57

4.1. Saw band dismantling ... 59
4.2. Saw band installation ... 60
4.3. Saw band stretching and inspection ... 60
4.3.1. Saw band stretching ... 60
4.3.2. Saw band inspection ... 60
4.3.3. Saw band run setting ... 61
4.3.4. Adjusting of the limit switch of the saw band stretching ... 61
4.4. Cooling agents and chips disposal ... 62
4.4.1. Coolant device inspection ... 62
4.4.2. Chips disposal ... 62
4.5. Hydraulic, Greases and oils ... 63
4.5.1. Gearbox oils ... 63
4.5.2. Lubricant greases ... 64
4.5.3. Lubrication ... 64
4.5.4. Hydraulic oils ... 65
4.5.5. Hydraulic oil level check ... 65
4.6. Machine cleaning ... 65
4.7. Worn pieces replacement ... 66
4.7.1. Pushing bearing replacement ... 66
4.7.2. Saw band guiding pulleys replacement ... 70
4.7.3. Hard metal guides replacement ... 71
4.7.4. Brush replacement ... 74

5. TROUBLESHOOTING ... 75

5.1. Mechanical problems ... 77
5.2. Electric and hydraulic problems ... 79

6. SCHÉMATA ... 81

6.1. Elektrické schema - standard / Elektroschema – standard /Wiring diagrams – standard ... 83
6.1.1. 3×400 V+P, 50 Hz ... 83
6.2. Elektrické schema – automatické natáčení úhlu (volitelné vybavení/ Elektroschema – Automatisches Winkelschießen der Arm (optionale Zubehör) / Wiring diagrams – automatic setting of the angle of the saw arm (optional accessory) ... 111
6.2.1. 3x400V+PE, 50 Hz ... 111
6.3. Hydraulické schéma / Hydraulikschema / Hydraulic diagram ... 144

7. VÝKRESY SESTAV PRO OBJEDNÁNÍ NÁHRADNÍCH DÍLŮ / ZEICHNUNGEN FÜR BESTELLUNG DER ERSATZTEILE / DRAWING ASSEMBLIES FOR SPARE PARTS ORDERS - INDIVIDUAL 820.640 DGH – STANDARD ... 147

7.1. Individual 820.640 DGH ... 148
7.2. Kusovník / Piece list / Stückliste Individual 820.640 DGH ... 149
7.3. Individual 820.640 DGH ... 150
7.4. Kusovník / Piece list / Stückliste Individual 820.640 DGH ... 151
7.5. Ovladací panel / Control panel / Bedienpult ... 152
7.6. Kusovník / Piece list / Stückliste - Ovladací panel / Control panel / Bedienpult ... 153
7.7. Ovladací panel / Control panel / Bedienpult ... 154
7.8. Kusovník / Piece list / Stückliste - Ovladací panel / Control panel / Bedienpult ... 155
7.9. Panel / Panel / Panel ... 157
7.10. Podstavec / Base / Untersatz ... 158
7.11. Kusovník / Piece list / Stückliste - Podstavec / Base / Untersatz ... 159
7.12. Konzola / Console / Konsole ... 160
7.13. Kusovník / Piece list / Stückliste - Konzola / Console / Konsole ... 161
7.14. Brzda / Brake / Bremse ... 162
7.15. Ložisko / Bearing / Lage ... 163
7.16. Centrování / Centering / Zentrieren ... 164
7.17. Kusovník / Piece list / Stückliste - Centrování / Centering / Zentrieren ... 165
7.18. Sloup / Pole / Säule ... 166
7.19. Kusovník / Piece list / Stückliste - Sloup / Pole / Säule ... 167
7.20. Odměřování / Measuring / Gehrungsmessung ... 169
7.21. Sloup / Pole / Säule ... 170
7.22. Kusovník / Piece list / Stückliste - Sloup / Pole / Säule ... 171
7.23. Rameno / Shoulder / Sägerahmen ... 172
7.24. Kusovník / Piece list / Stückliste - Rameno / Shoulder / Sägerahmen ... 173
7.25. Rameno / Shoulder / Sägerahmen ... 174

7.26. Kusovník / Piece list / Stückliste - Rameno / Shoulder / Sägerahmen 175
7.27. Kartáč / Brush / Bürste 176
7.28. Kusovník / Piece list / Stückliste - Kartáč / Brush / Bürste 177
7.29. Kolečko / Wheel / Rolle 178
7.30. Kusovník / Piece list / Stückliste - Kolečko / Wheel / Rolle 179
7.31. Vedení / Guide / Backenführung 181
7.32. Pohon / Drive / Antrieb 182
7.33. Kusovník / Piece list / Stückliste - Pohon / Drive / Antrieb 183
7.34. Napínání / Tensioning / Spannung 184
7.35. Kusovník / Piece list / Stückliste - Napínání / Tensioning / Spannung 185
7.36. Válec napínací / Tensioning cylinder / Spannzylinder 186
7.37. Kusovník / Piece list / Stückliste - Válec napínací / Tensioning cylinder / Spannzylinder 187
7.38. Vedení pásu / Belt guide / Sägebandführung 188
7.39. Kusovník / Piece list / Stückliste - Vedení pásu / Belt guide / Sägebandführung 189
7.40. Kostka regulace / Regulation cube / Regulungswürfel 190
7.41. Kusovník / Piece list / Stückliste - Kostka regulace / Regulation cube / Regulungswürfel 191
7.42. Kostka vodící / Lead cube / Führungsklotz 192
7.43. Kusovník / Piece list / Stückliste - Kostka vodící / Lead cube / Führungsklotz193
7.44. Vedení / Guide / Backenführung 195
7.45. Kostka vodící / Lead cube / Führungsklotz 196
7.46. Kusovník / Piece list / Stückliste -Kostka vodící / Lead cube / Führungsklotz197
7.47. Vedení / Guide / Backenführung 199
7.48. Válec zvedací /Lifting cylinder / Hebezylinder 200
7.49. Kusovník / Piece list / Stückliste -Válec zvedací /Lifting cylinder / Hebezylinder 201
7.50. Svěrák / Vice / Schraubstock 202
7.51. Kusovník / Piece list / Stückliste - Svěrák / Vice / Schraubstock 203
7.52. Válec pomocný / Auxiliary cylinder / Hilfszylinder 204
7.53. Kusovník / Piece list / Stückliste -Válec pomocný / Auxiliary cylinder / Hilfszylinder 205
7.54. Váleček / Cylinder / Rolle 207
7.55. Váleček / Cylinder / Rolle – 201.Y317-060 208
7.56. Váleček / Cylinder / Rolle – 201.Y317-070 209
7.57. Svěrák / Vice / Schraubstock 210
7.58. Kusovník / Piece list / Stückliste - Svěrák / Vice / Schraubstock 211
7.59. Válec svěráku / Vice cylinder / Schraubstockzylinder 212
7.60. Kusovník / Piece list / Stückliste -Válec svěráku / Vice cylinder / Schraubstockzylinder 213

8. VÝKRESY SESTAV PRO OBJEDNÁNÍ NÁHRADNÍCH DÍLŮ / ZEICHNUNGEN FÜR BESTELLUNG DER ERSATZTEILE / DRAWING ASSEMBLIES FOR SPARE PARTS ORDERS INDIVIDUAL 820.640 DGH – BEZ ROZVADĚČE/ WITHOUT SWITCHBOARD/ OHNE ELEKTRISCH VERTAILER 215

8.1. Individual 820.640 DGH – bez rozvaděče/ without switchboard/ ohne elektrisch vertailer 216
8.2. Kusovník / Piece list / Stückliste Individual 820.640 DGH – bez rozvaděče/ without switchboard/ ohne elektrisch vertailer 217
8.3. Individual 820.640 DGH – bez rozvaděče/ without switchboard/ ohne elektrisch vertailer 218
8.4. Kusovník / Piece list / Stückliste Individual 820.640 DGH – bez rozvaděče/ without switchboard/ ohne elektrisch vertailer 219
8.5. Rameno / Saw arm / Sägerahmen 220
8.6. Kusovník / Piece list / Stückliste - Rameno / Saw arm / Sägerahmen 221
8.7. Rameno / Saw arm / Sägerahmen 222
8.8. Kusovník / Piece list / Stückliste - Rameno / Saw arm / Sägerahmen 223
8.9. Válec napínací / Tensioning cylinder / Spannzylinder 224
8.10. Kusovník / Piece list / Stückliste - Válec napínací / Tensioning cylinder / Spannzylinder 225
8.11. Vedení pásu / Belt guide / Sägebandführung 226
8.12. Kusovník / Piece list / Stückliste - Vedení pásu / Belt guide / Sägebandführung 227
8.13. Odměřování / Measuring / Gemessung 228
8.14. Panel / Panel / Panel 229
8.15. Ovládací panel/ Control panel/ Bedienpult 230

8.16. Kusovník / Piece list / Stückliste - Ovladací panel / Control panel / Bedienpult231

9. VÝKRESY SESTAV PRO OBJEDNÁNÍ NÁHRADNÍCH DÍLŮ - VOLITELNÉ PŘÍSLUŠENSTVÍ / ZEICHNUNGEN FÜR BESTELLUNG DER ERSATZTEILE - OPTIONALE ZUBEHÖR / DRAWING ASSEMBLIES FOR SPARE PARTS ORDER- OPTIONAL ACCESSORIES 233

9.1. Automat. nataceni ramene/ Automatische Rotation Arm/ Automatic arm rotation (Optional)....234
9.2. Kusovník / Piece list / Stückliste Automat. nataceni ramene/ Automatische Rotation Arm/ Automatic arm rotation (Optional)....235
9.2.1. Pohon/ Drive/ Antrieb (Optional)....236
9.2.2. Kusovník / Piece list / Stückliste Pohon/ Drive/ Antrieb (Optional)....237
9.2.3. Brzda/ Brake/ Brehmse (Optional)....238
9.2.4. Snímač magnet./ magnetic sensor/ Magnetsensor (Optional)....239

1. Safety notes

The operating instructions must be read by the person, who keeps in touch with the machine before transportation, installation, using, servicing, reparation, stocking or removal!

The operating instructions include relevant information. The operator must familiarise himself with the install and operation, safety notes and machine servicing, because reliability and service life must be reached. The operating instructions must avoid risks, which are linked to work on the machine. Before transporting and using of the machine, please read the instructions thoroughly!

Attention!
The operating instructions must be available at the machine!
Keep the operating instructions in good condition!

1.1. Machine determination

The band saw **Individual 820.640 DGH** is determined for cutting and shortening of rolled bars and drawn bars and profiles from steels, stainless steels, non-ferrous metals and plastics **with cutting angle from -60° to 60°**.

Combustible materials are excepted for cutting! Any other usage and operation outside this range are unauthorized and the manufacturer/supplier does not accept any responsibility for any damages resulting from such misuse. **The operator has full responsibility!**

The machine is equipped with safety and protective guarding for operator and machine protection. Nevertheless, this safety and protective guarding cannot prevent injury. Service personnel must read this chapter and comprehend it, before he starts to work on the machine. **Always keep instructions about work safety!** Service personnel must take into account other aspects of the risk, which refer to the ambient conditions and the material.

Attention!
Consider the safety signs on the machine. Do not remove or damage them!

1.2. Protective suit and personal safety

Wear tight fitting overalls! Loose fitting clothes may be caught with machine parts and cause serious injury.

Wear protective gloves! Material cuts and saw band have sharp edges and may cause serious injuries.

Attention!
Gloves you can use only at working material replacement (saw band)! The machine and accessories must be inactive!
If the machine is running, you must not wear gloves! It is dangerous, because some parts of the machine can catch gloves!

Wear protective shoes with non-skid soles! The unsuitable shoes may cause balance loss and following injury. Falling work pieces may cause serious injuries too.

Wear protective goggles! Chips and cooling liquid may damage your eyes.

Always wear ear protections! Most of the machines emit up to 80 dB and may damage your hearing.

Do not wear jewellery and always tie back long hair! Moving machine parts can catch jewellery or loose hair and may cause serious injuries.

Operate the machine only when you are fit enough to work. Illnesses or injuries diminish concentration. Avoid machine work, which may compromise the safety of you and your colleagues!

1.3. Safety notes for machine operator

Attention!
Machine can be operated by person older than 18 years!
Machine can be operated only person physically and mentally fit for this activity

Keep instructions and orders about work safety!
Read the operating instructions, before you start to work on the machine! Keep the operating instructions in good condition!

Machine can be operated only by one person. Machine operator is responsible for presence of other persons by the machine.

Close covers before the machine starting and check, if the covers are not damaged. Damaged covers must be repaired or changed. Do not start the machine, if the cover is removed! Check, if the electric cables are not damaged.

- Do not hold the material for clamping to the vice and for cutting!
- Do not operate with the buttons and the switches on the control panel, when you have gloves!

Attention!
Do not connect the machine to electricity if the covers are removed. Do not touch the electrical equipment.

- For machine starting take care, that there is nobody in the working area of the machine (it means in the working area of the vice, the saw band, the saw arm etc.).
- In no circumstances touch the rotating elements.
- Work on the machine only when the machine is in good condition!
- Check at least once in a shift, if the machine is not damaged. If the machine is damaged, you must bring the machine in order and you must inform your superior!
- Keep your working area clean! Ensure sufficient lighting in the working area.
- Take off the spilt water or the oil from the floor and dry it. Do not touch the cooling liquid with bare hands! Do not set the nozzle of the cooling liquid, when the machine is started on
- Do not remove the chips from the working area of the machine, when the machine is started on!
- Do not use the compressed air for the machine cleaning or for the chips removing!
- Use the protective instruments for chips removal!

1.4. Safety notes for the servicing and repairs

Attention!
Only a qualified professional can carry out the servicing and repairs of the electric equipment! Take special care during the work with electrical equipment. High voltage shock can have fatal consequences! Always keep notes about work safety! Otherwise, there is possibility of heavy injury!

Switch off the main switch and lock it, before you start service work! Otherwise, there is possibility of hazardous machine starting.

Only qualified person can do the servicing and repairs. For parts changing, use only parts, which are identical with the originals. Otherwise, there is possibility of health hazard. Use only recommended type of the hydraulic oils and oils and lubricants!

Do not remove or do not lock the limit switches or safety equipments! Any use of the saw, accessories or machine parts other than that intended by the BOMAR, spol. s r.o. company is not permitted. The guarantee on this product will be afterward lost and BOMAR, spol. s r.o. takes no responsibility for caused damages.

1.5. Safety machine accessories

The machine is equipped with safety accessories. It protects the operator from injuries and the machine before damage. The safety accessories are blocking accessories, emergency switches and covers. Check once in a week the function of the safety accessories. If the safety accessories are functionless, you must stop work and repair or change the safety accessories.

Enhanced risk!
Do not come into or intervene in the cutting area. Otherwise, there is possibility of heavy injury.

1.5.1. Emergency Stop Switch

Emergency Stop Switch is used for emergency switching – off the machine in case defect or health hazard. By pressing **Emergency Stop Switch** will immediately stop all dangerous machine movements.

If any damages or fault appears, immediately press Emergency Stop Switch!

It is possible to release the pressed button by twisting of the upper part of the button.

The **Emergency Stop Switch** is placed at the control panel of the machine.

1.5.2. Arm covers

Left cover – It covers tightening wheel. If the cover is opened during operation, the limit switch is opened and the band saw is stopped. The band saw is not possible start in set mode.

Right cover – It covers driving wheel. If the cover is opened during operation, the limit switch is opened and the band saw is stopped. The band saw is not possible start in set mode.

Central cover – It covers band saw.

The band saw is stated to the operation, when the covers is closed!

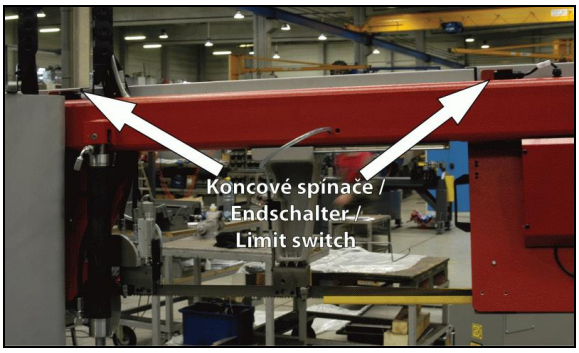

Two limit switches on saw arm control if cowers are open or not.

1.5.3. Saw band stretching and rupture inspection

This device checks the saw band stretching and causes immediate machine shut – down in the event the band ruptures.

The device contains limit switch. Check the stretching carefully and periodically – eventually adjust.

1.5.4. Band saw cover

It covers the visible area of the saw band from left guiding cube to the frame.

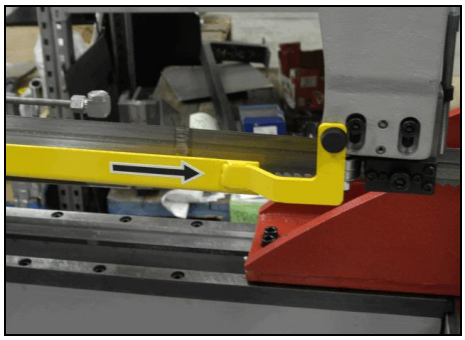

Never switch on the saw band driver if this cover is not mounted!

1.6. Safety notes for the cooling

Attention!

- *When handling cooling agents always wear hazardous fluid-proof gloves!*
- *Wear protective goggles!*
- *Cooling liquid can get in contact with your eyes and may cause permanent severe injuries*

1.6.1. Instructions for first help

1. Pull off and safely remove polluted, soaked clothing.

2. For breathing, go out in the fresh air or look for first aid treatment.
3. Wash with water or use crèmes for contact with the skin.
4. Flush with water for eyes and look for first aid treatment.
5. For swallowing, drink a lot of water and induce vomiting. Look for medical help.

1.7. Umístění štítku stroje / Maschinenschild position / Position of machine label

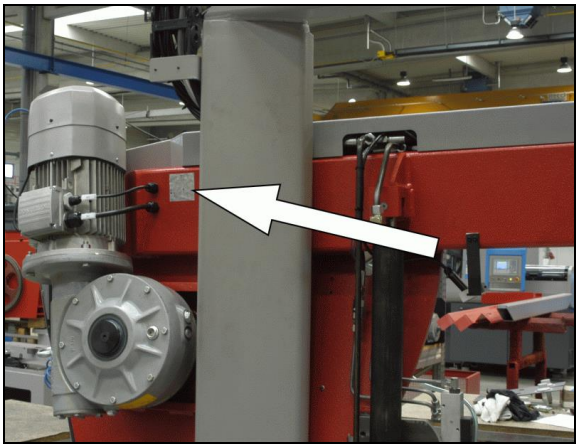

Machine label is located at the rear of saw arm near the electromotor.

1.8. Umístění bezpečnostních značek / Verteilung der Sicherheitszeichen / Position of safety symbols

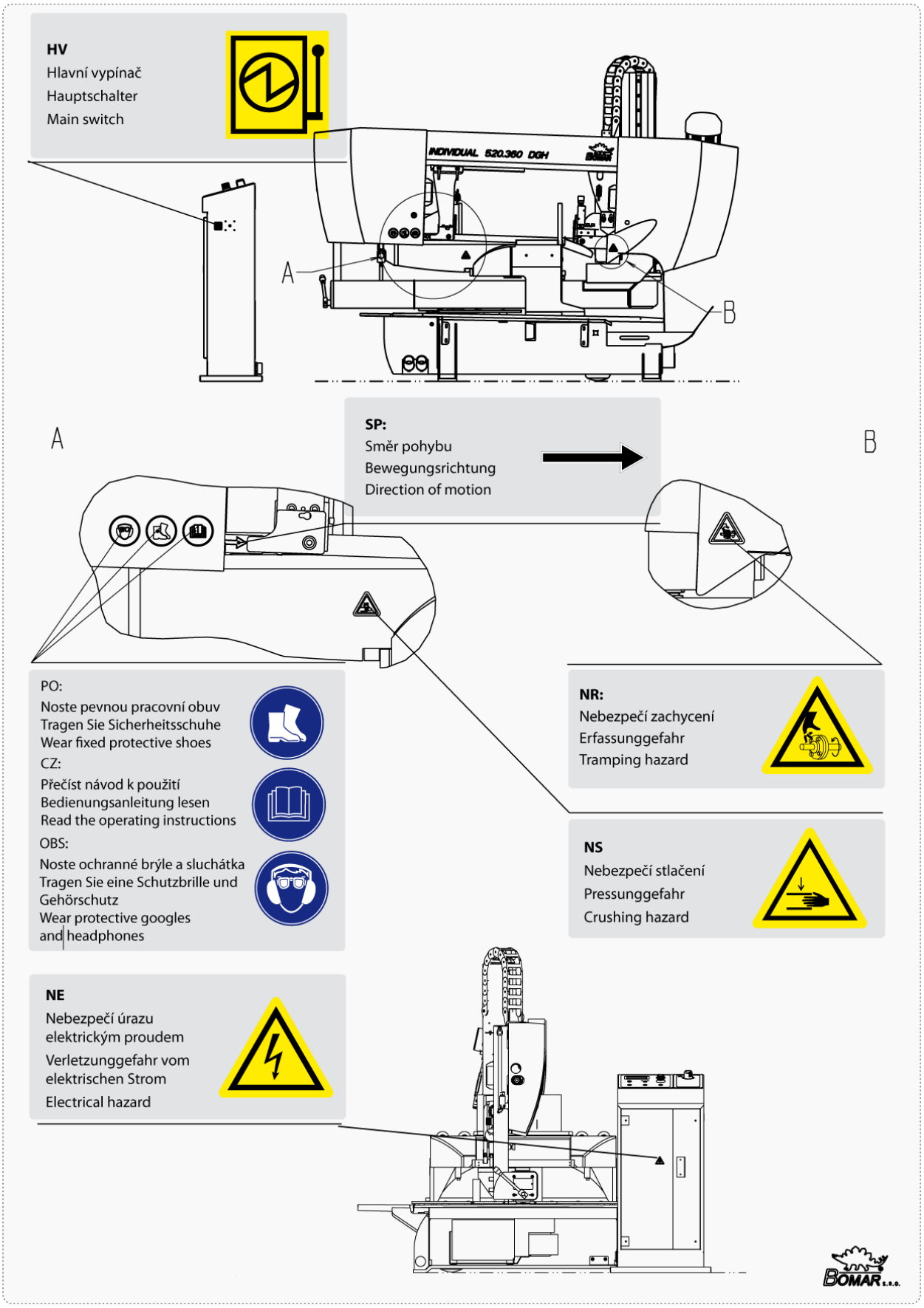

2. Machine documentation

2.1. Technická data / Technische Daten / Technical data

Hmotnost stroje / Maschinengewicht / Machine weight:	
• Hmotnost / Gewicht / Weight	2500 kg
Rozměry stroje / Maschinengröße / Machine size :	
• Délka / Länge / Lenght	3750 mm
• Šířka / Breite / Width	4050 mm
• Výška / Höhe / Height	2700 mm
Elektrické vybavení / Elektrische Ausrüstung / Electical equipment:	
• Napájení / Versorgungsspannun / Supply voltage	~3 x 400 V , 50Hz, TN-C
• Příkon / Gesamptschlusswert / Total Input	10,5 kW
• Max.jištění / Max. Vorschaltsicherung / Max. Fuse	32 A
• Krytí / Schutzart / Protection	IP 54
Akustický tlak / Schalldruckpegel / Acoustic pressure:	
• Individual 820.640 DGH	L_{Aeqv}=76,3 dB
Pohon / Atrieb / Drive:	
• Typ / Typ / Type	MDERA 132-12(dep. on saw ver.)
• Napájení / Versorgungsspannun / Supply voltage	~3 x 400V, 50Hz (dep. on saw ver.)
• Výkon / Leistung / Output	5,5 kW
• Jmenovité otáčky / Motornenndrehzahl / Nominal speed	1440 min^{-1}
Hydraulické zařízení / Kühlmiteleinrichtung / Hydraulic equipment:	
• Typ / Typ / Type	SMA 03/870-1554
• Výkon / Leistung / Output	8 MPa/3 kW
Chladící zařízení / Kühlmiteleinrichtung / Cooling equipment:	
• Typ / Typ / Type	3-COA4-12
• Výkon / Leistung / Output	0,05 kW
• Obsah nádrže / Volumen vom Kühlmittel / Capacity	35 l
Rozměr pásu / Sägebanddimension / Band size:	
7900×54×1,6 mm	
Řezná rychlost / Schnittgeschwindigkeit / Cutting speed:	
20–120 m/min.	

Řezné rozsahy / Schnittbereiche / Cutting size:

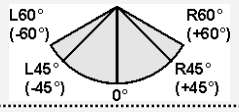			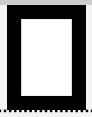	
0°	Ø640 mm	820×640 mm	820×640 mm	640×640 mm
45° R	Ø550 mm	560×300 mm	480×640 mm	550×550 mm
45° L	Ø580 mm	580×520 mm	540×640 mm	560×560 mm
60° R	Ø380 mm	380×310 mm	305×640 mm	360×360 mm
60° L	Ø400 mm	405×450 mm	370×640 mm	400×400 mm

Level of acoustic pressure:

Equivalent level of acoustic pressure A (noise) at operator position are L_{Aeqv}=76,3 dB. Mentioned values are levels of emission which doesn't have to represent safe levels. Factors which influence real level of acoustic pressure on machine operator are: working place characteristics, cut material, saw band. These factors have significantly influence on acoustic pressure.

2.2. Rozměrové schéma / Aufstellzeichnung / Installation diagram

	A	B	C
Individual 520.360 (D)GH	2350	2450	2100
Individual 620.460 (D)GH	3000	3200	2350
Individual 720.540 (D)GH	3250	3550	2420
Individual 820.640 (D)GH	3750	4050	2700

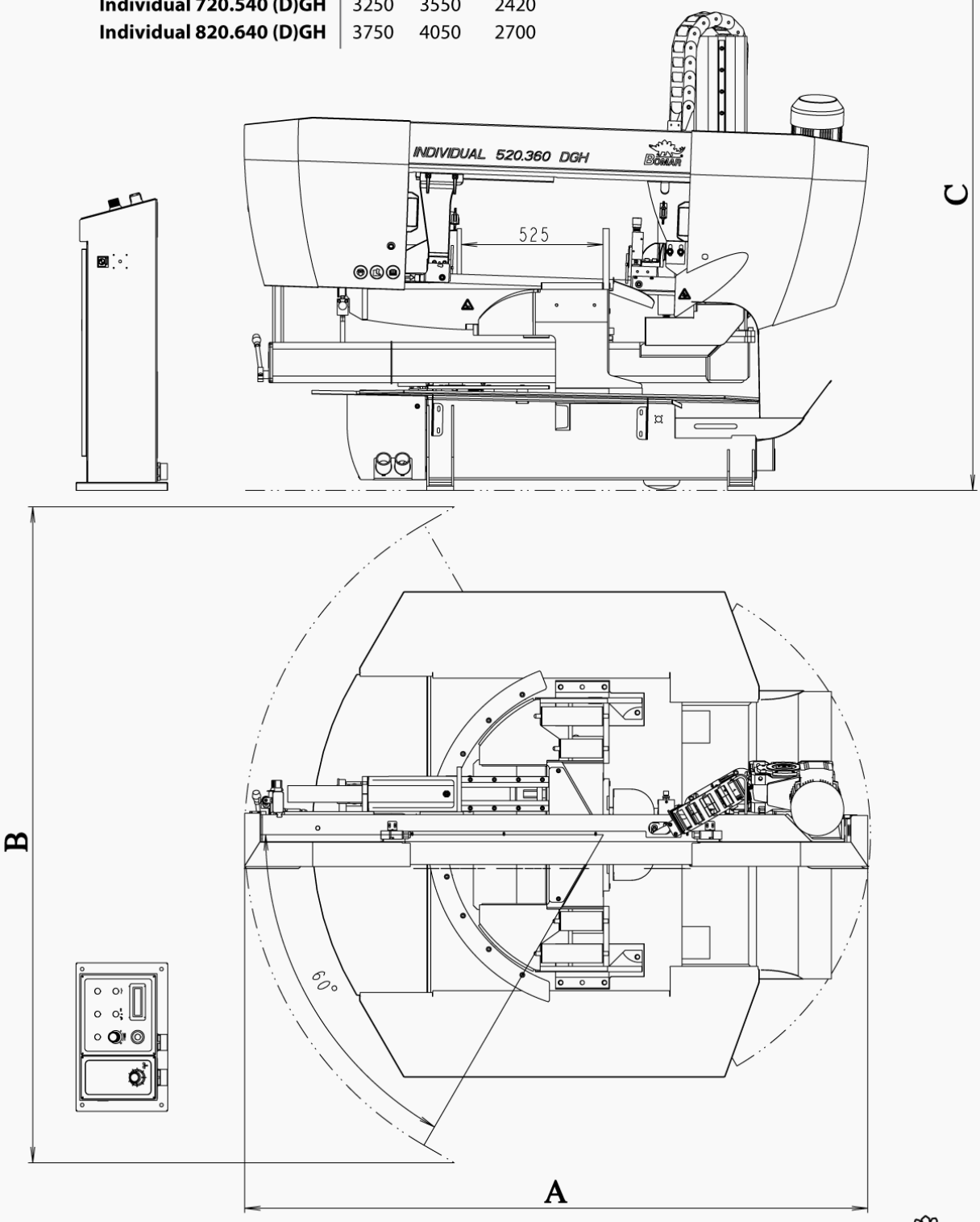

2.3. Popis / Beschreibung / Description

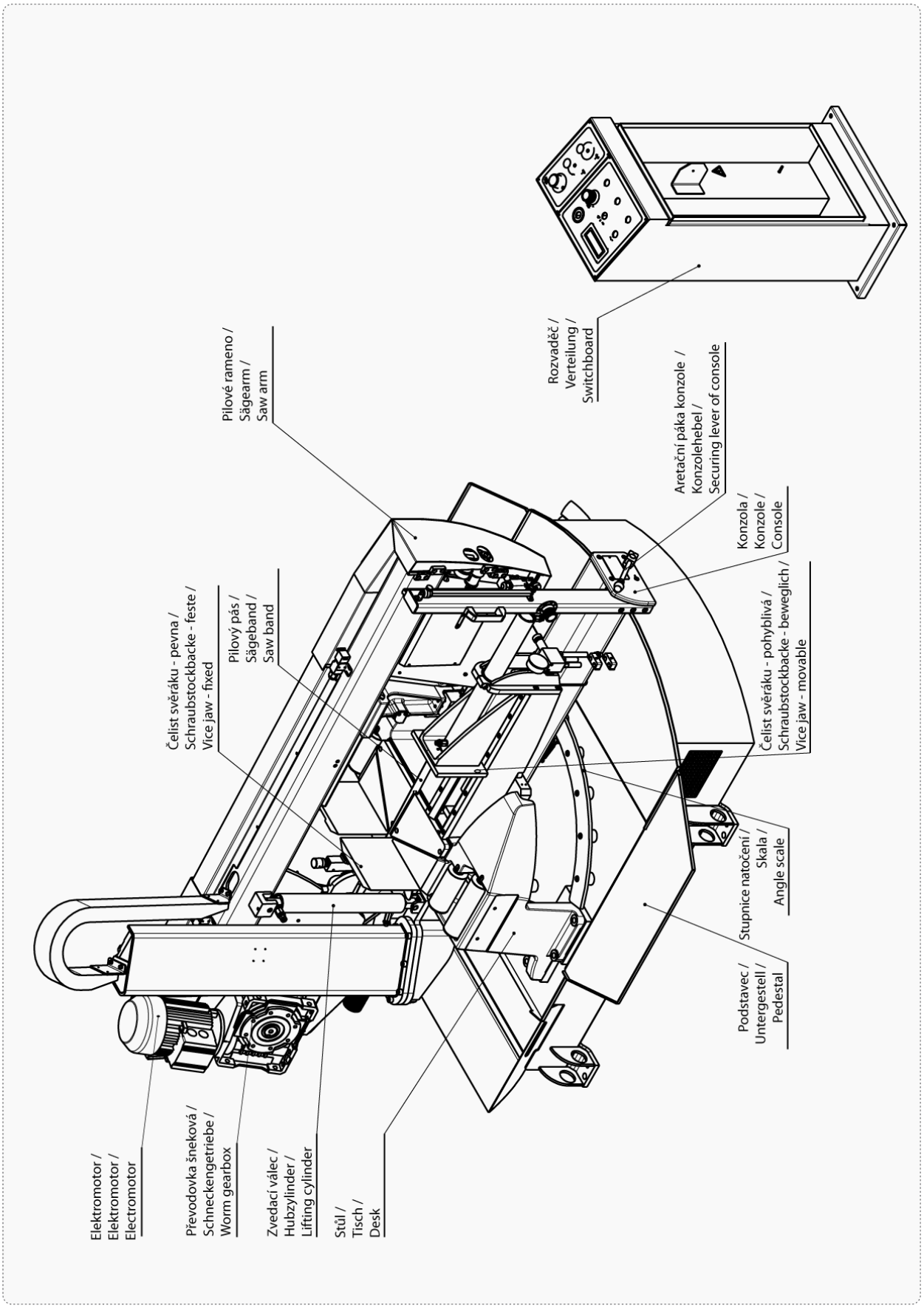

2.4. Transportation and stocking

2.4.1. Conditions for transportation and stocking

Keep recommendations for the manufacturers for transportation and stocking! If the recommendations are not kept, damage can occur to the machine.

- Don't use a forklift truck for handling the machine, if you do not have license for it!
- Don't move under suspended loads! Fault in lifting device may cause serious injury. Keep a safe distance from the machine during the transport.
- Temperature of the air from *-25°C to 55°C*, for a *short term* (max. 24 hours) temperature of the air until *70°C*
- Do not expose the machine to radiation (for example microwave radiation, ultraviolet radiation, laser radiation, x-ray radiation). Radiation can cause problems with the machine function and deteriorating condition of the isolation.
- Take measures, to prevent damage by dampness, by vibrations and by shakes.

2.4.2. Transport and stocking preparations

- Close the vice and thoroughly oil all blank surfaces.
- Lower the saw frame to the lowest position.
- Make sure to empty the machine of all traces of the cooling agent.
- Fasten all loose parts securely to the machine.
- Pack and wrap the control desk securely to avoid damage during transport.

Fix the stickers stating the minimum approximate machine weight to at least five well visible places.

2.4.3. Transport and stocking

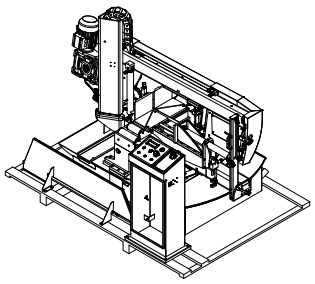

The machine must be secured during transportation. Screw on the palette to the floor of the van or the trailer. Be careful that the machine is not damaged during transportation. Store the machine only under conditions mentioned in the manual, to avoid damage of the machine.

- Make sure that the hand pallet truck; the forklift truck or the crane and the suspension cables had sufficient capacity.
- Make sure that the van or the trailer had sufficient capacity.
- The machine must be secured during transportation.
- Screw on the palette to the floor of the van or the trailer.
- Be careful that the machine is not damaged during transportation. Make sure that the van or the trailer had sufficient capacity.
- The machine must be secured during transportation. Screw on the palette to the floor of the van or the trailer. Be careful that the machine is not damaged during transportation.
- Store the machine only under conditions mentioned in the manual, to avoid damage of the machine.

It is forbidden to handle the machine any other way, than it is written in this operating instructions, the machine can be damaged.

2.4.4. Transportní schéma / Transport schema / Transport scheme

	A	B	C	X
Individual 520.360 (D)GH	2400	1695	1950	1200
Individual 620.460 (D)GH	3100	1695	2260	1200
Individual 720.540 (D)GH	3300	1930	2430	1225
Individual 820.640 (D)GH	3600	1930	2600	1225

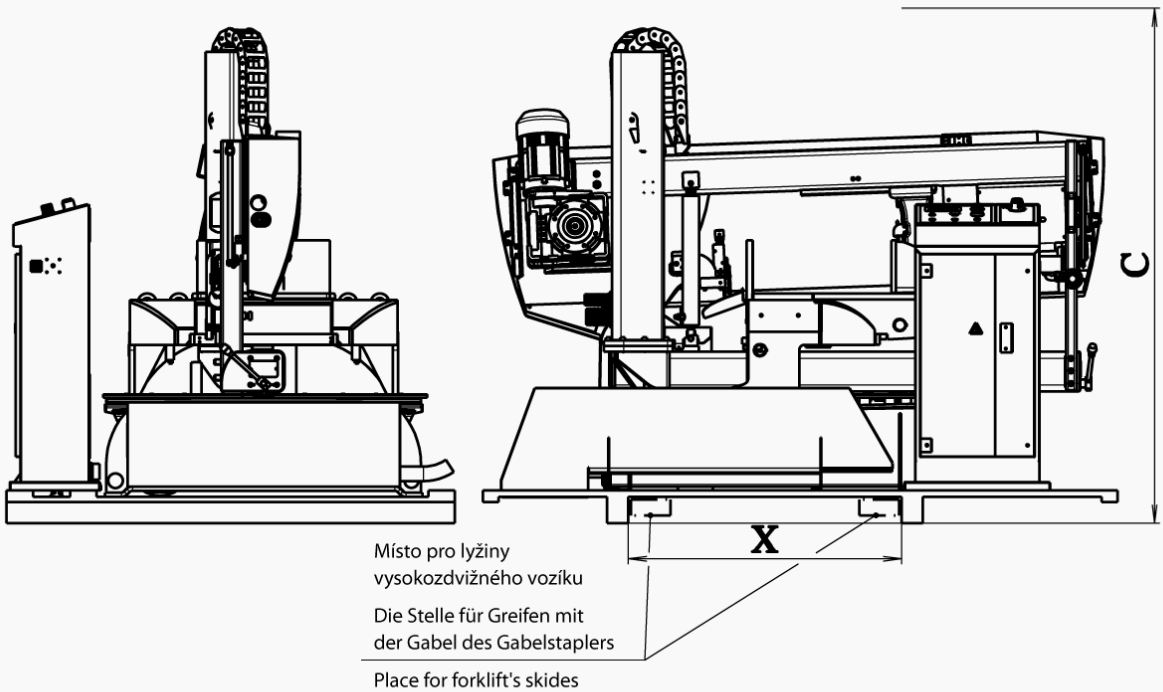

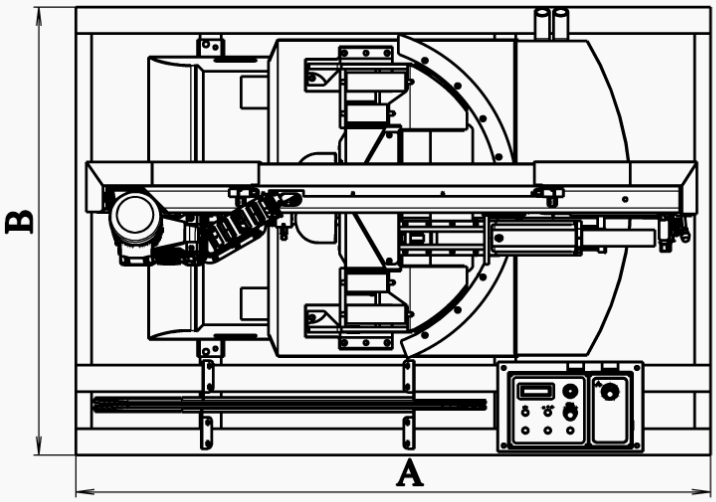

2.5. Activation

2.5.1. Machine working conditions

Keep the conditions of the manufacturer for machine operating! If recommendations are not kept, damage can occur to the machine.

The manufacturer warrants the correct function of the machine for these conditions:

- At temperature air from ***5°C to 40°C***, the temperature average during 24 hours must ***not exceed over 35°C***.
- At relative dampness of the air in the extend from 30% to 95% (not concentrate)
- Altitude lower than 1000 metres.
- Do not expose the machine to the radiation (for example microwave radiation, ultra-violet radiation, laser radiation, x-ray radiation). Radiation can cause problems with the machine function and deteriorating condition of the isolation.

2.6. Band saw unpacking and assembling

Remove the packing from the machine and unpack all parts.

Attention!
Switch off the main switch and lock it, before you start assembly! Otherwise, there is possibility of hazardous machine starting.

2.6.1. Machine installing and levelling

Check the floor supporting capacity before machine installing. If the floor capacity does not agree with requirements, you must prepare the necessary base for the machine.

Minimal requirement:

machine weight – Individual 820.640 DGH – 2500 kg

+ weight of accessories

+ maximum weight of material

- The machine must be levelled at the horizontal position. All feet of the machine must touch with the floor after levelling
- The machine must be levelled by means of the calibrated spirit level. Spirit level is put on the vice area. Set the roller conveyors according to the spirit level.
- For machine levelling, take care that there is sufficient available space for operation, repair work, servicing of the machine and handling the material..
- The machine including appended parts and accessories must be visible from the place of operation.

2.6.2. Machine disposal after lifetime

Blown out all service fluids (cooling liquid, hydraulic oil) into designated reservoir. Dismantle machine into separate parts and dispose them in accordance with valid directives.

2.6.3. Kotevní plan / Verankerungsplan / Grounding plan

	A	B	Příkon Gesamptschlusswert Total Input [kW]	Max.jištění Max. Vorschaltsicherung Max. Fuse [A]	Únosnost podlahy Vorschaltsicherung Carrying capacity [kg/m²]
Individual 520.360 (D)GH	1114	1164	5,2 kW	16	1100
Individual 620.460 (D)GH	1114	1164	8,7 kW	32	1500
Individual 720.540 (D)GH	1107	1482	8,7 kW	32	1700
Individual 820.640 (D)GH	1107	1482	10,5 kW	32	2000

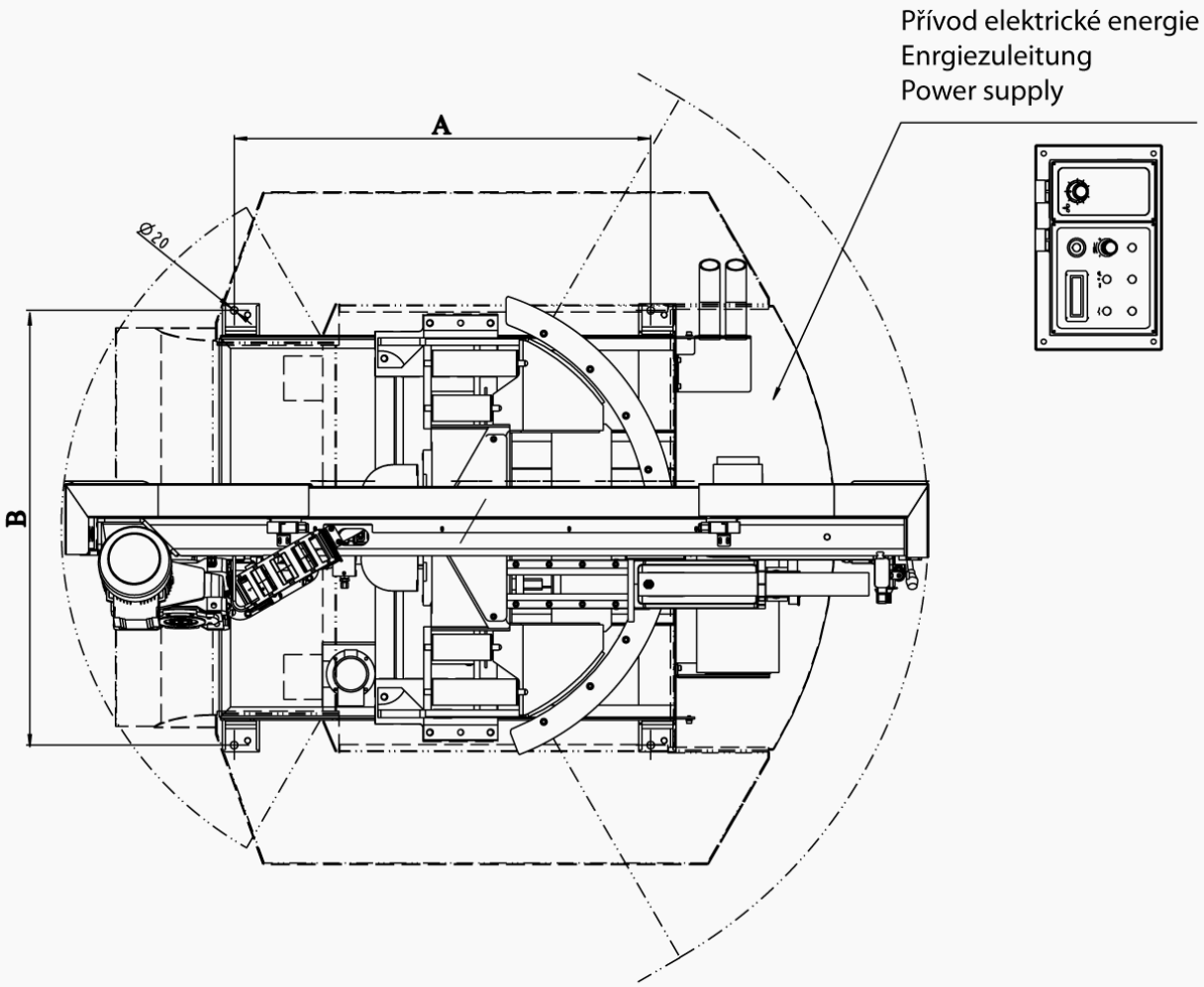

Kotvící materiál / Verankerungsmaterial / Grouding material

- 4× Hmoždina / Dübel / Plug – ø18 mm
- Vrtáno do hloubky / In die Tiefe gebohrt / Drilled to – 140 mm
- Šrouby / Schraube / Screws – M16

Šrouby podložit deskami o min. rozměrech P10×100-100
- Die Schrauben mit Platten mit Minimaldimensionen P10×100-100 unterlegen
Screew must be bottomed with plates (min. dimensions P10×100-100)

Požadavky na rovinnost podlahy / Anforderungen an die Bodenebenheit / Requirements for floor flatness

± 10 mm / 1 m

2.7. Electrical connection

Attention!
Only a qualified professional must carry out the servicing and repairs of the electric equipment! *Take special care during work with electrical equipment. High voltage shock can have fatal consequences! Always keep notes about work safety.*

Electrical parameters of the machine:

- Service voltage: ~ 3×400 V, 50 Hz, TN-C
- Total input / Max. fuse: 10,5 kW/ 32 A

Before connecting switch off the main switch of the power supply circuit for the machine and ensure dry place when doing connecting works!

Service voltage must agree with the line voltage!

Note:
The values of the crosscut of the conductor and the rated current are in the norms.

Crosscut of the supply line must respond with rated current for max. machine load.

Note:
The socket with the fork can be used only at the machines with the rated current less than 16 A and total input less than 3 kW.

Attention!
In this case the extra main switch becomes primary and the main switch on the machine has only secondary function.

In case the machine is connected with a direct connection, an extra main switch must be added which can be locked in zero position.

2.7.1. Check the direction of the saw band

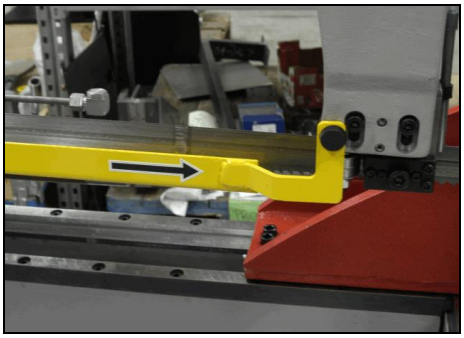

After the machine has been successfully connected, briefly switch on the machine and put the driving engine of the band in the running position. The direction must be in accordance with the arrow direction on the saw band cover. In case the direction of the saw band does not match, two phases at the terminal strip must be switched.

2.8. Filling of the cooling system

Prepare the mixture of the water and the cooling liquid. Keep the concentration specified by manufacturer. Shift away the cover from the drainage hole. Fill the mixture of the water and the cooling liquid to the tank of the cooling system. Area of the tank for the cooling liquid is discovered from the chapter *Technical data*.

Let the drainage hole opened and with the sieve during operation, because it secures the right work of the cooling system. Filling the tank with the cooling liquid, take care that the liquid does not drip out of the tank and the tank does not overflowed.

2.9. Check machine function

Check, if the machine or some parts of the machine were not damaged during transport.

Check, if covers are installed and functional. Check by means of the Tenzomat if the saw band is correctly stretched. If it is necessary, you can stretch the saw band according to chapter *Selection and replacement of the saw band*. Values of the saw band stretching are on the Tenzomat. Switch on the main switch and check the motors and systems (saw band drive, hydraulic pump, cooling pump, chips conveyor).

Open and close the main vice. Turn the saw frame of the band saw from one outer position to other outer position. Raise the saw frame to the top position and drop the saw frame to the lowest position.

Start the machine with the cooling pump and let it run without load until the cooling system will be filled with cooling liquid. As soon as the cooling liquid starts to escape from the nozzles of the cooling system, the cooling system is ready for the operation. Carry one cycle of cutting without material. Check, if the machine runs with no irregularities. If all machine functions are right, the machine is ready for operation.

2.10. Saw band

Refit the saw band cover only after you have installed and tightened the saw band.

2.10.1. Saw band size

7900×54×1,6 mm

2.10.2. Selection of the saw band tooth system

The manufacturers provide the saw bands with constant and variable tooth system. The important factor for selection of the tooth system is length of the cutting canal with respect to the size of the product

1. *Constant tooth system* – the saw band has parallel tooth pitch all over length. This way is suitable for cutting of solid material.

BOMAR for recommended Variable tooth system for band saw.

2. *Variable tooth system* – tooth pitch is variable. Variable tooth system is used for profiled materials and bundle cutting. Variable tooth pitch lowers vibration of the saw band, increases service life of the saw band and quality of the cutting area.

In tables, there are advised type of the tooth system depending on sizes and form of the cutting material.

Footnotes:

$Z_{tp}Z$ – teeth number on one inch S – tooth with zero angle of the teeth K – tooth with positive angle of the teeth

Examples of the tooth system marking:

32 S – number „32" means 32 teeth on one inch (that means constant tooth system), letter „S" marks teeth with zero angle of the tooth.

4–6 K – number „4–6" means 4 till 6 teeth on one inch
(that means variable tooth system); letter „K" marks teeth with positive angle of the teeth.

2.10.3. Saw band running-in

Running-in: Cut the material with the frame lowering reduced to 50% only. When vibrations occur increase or decrease the band speed.

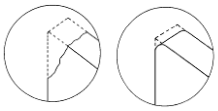

When cutting small pieces run the band until approximately 300 cm^2 of material has been cut. When cutting large pieces run the band for 15 minutes approximately. When the band has been run, increase the lowering-speed to normal speed. The running in of the saw band avoids micro-breaks on the cutting edges of new saw band ensuing from first excessive stress. This would decrease service life substantially. The optimal running in of the saw band produces ideal rounded cutting edges and therefore the conditions for an optimal service life.

Note: *Run regrinding saw bands too.*

2.10.4. Tables for teeth selection:

SHAPED MATERIAL (D_p, S = mm)

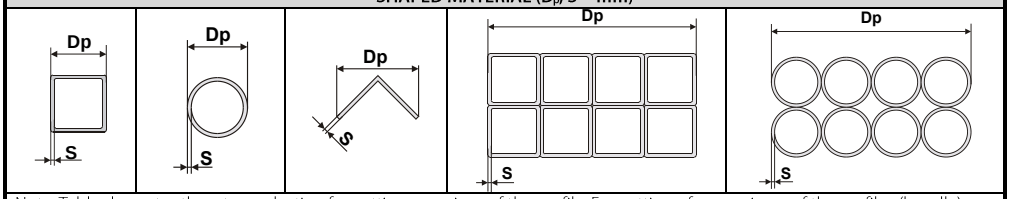

Note: Table shows tooth system selection for cutting one piece of the profile. For cutting of more pieces of the profiles (bundle), you must think of the size of the wall as double size of the wall of one profile (that means, size „S" equates to 2×S). In table, there are tooth systems constant and variable.

Size of the wall S [mm]	Tooth system (Z_pZ) Outer diameter of the profile D_p [mm]					
	20	40	60	80	100	120
2	32 S	24 S	18 S	18 S	14 S	14 S
3	24 S	18 S	14 S	14 S	10–14 S	10–14 S
4	24 S	14 S	10–14 S	10–14 S	8–12 S	8–12 S
5	18 S	10–14 S	10–14 S	8–12 S	6–10 S	6–10 S
6	18 S	10–14 S	8–12 S	8–12 S	6–10 S	6–10 S
8	14 S	8–12 S	6–10 S	6–10 S	5–8 S	5–8 S
10	-	6–10 S	6–10 S	5–8 S	5–8 S	5–8 S
12	-	6–10 S	5–8 S	5–8 S	4–6 K	4–6 K
15	-	5–8 S	5–8 S	4–6 K	4–6 K	4–6 K
20	-	-	4–6 K	4–6 K	4–6 K	3–4 K
30	-	-	-	3–4 K	3–4 K	3–4 K
50	-	-	-	-	-	3–4 K

Size of the wall S [mm]	Tooth system (Z_pZ) Outer diameter of the profile D_p [mm]					
	150	200	300	500	750	1000
2	10–14 S	10–14 S	8–12 S	6–10 S	5–8 S	5–8 S
3	8–12 S	8–12 S	6–10 S	5–8 S	4–6 K	4–6 K
4	6–10 S	6–10 S	5–8 S	4–6 K	4–6 K	4–6 K
5	6–10 S	5–8 S	4–6 K	4–6 K	4–6 K	3–4 K
6	5–8 S	5–8 S	4–6 K	4–6 K	3–4 K	3–4 K
8	5–8 S	4–6 K	4–6 K	3–4 K	3–4 K	3–4 K
10	4–6 K	4–6 K	4–6 K	3–4 K	3–4 K	2–3 K
12	4–6 K	4–6 K	3–4 K	3–4 K	2–3 K	2–3 K
15	4–6 K	3–4 K	3–4 K	2–3 K	2–3 K	2–3 K
20	3–4 K	3–4 K	2–3 K	2–3 K	2–3 K	2–3 K
30	3–4 K	2–3 K	2–3 K	2–3 K	1,4–2 K	1,4–2 K
50	2–3 K	2–3 K	2–3 K	1,4–2 K	1,4–2 K	1,4–2 K
75	-	2–3 K	1,4–2 K	1,4–2 K	1,4–2 K	0,75–1,25 K
100	-	-	1,4–2 K	0,75–1,25 K	0,75–1,25 K	0,75–1,25 K
150	-	-	-	0,75–1,25 K	0,75–1,25 K	0,75–1,25 K
200	-	-	-	0,75–1,25 K	0,75–1,25 K	0,75–1,25 K

SOLID MATERIAL (D = mm)

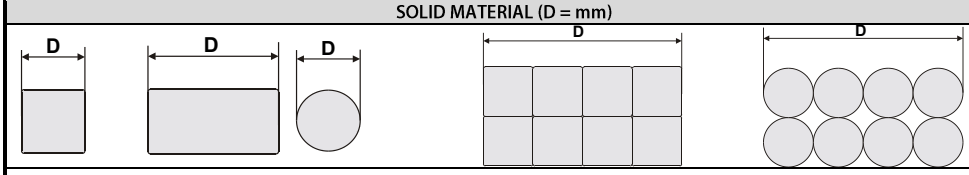

Constant tooth system	
length of the cut D	tooth system (Z_pZ)
to 3 mm	32
to 6 mm	24
to 10 mm	18
to 15 mm	14
15–30 mm	10
30–50 mm	8
50–80 mm	6
80–120 mm	4
120–200 mm	3
200–400 mm	2
300–800 mm	1,25
700–3000 mm	0,75

Variable tooth system	
length of the cut D	tooth system (Z_pZ)
to 30 mm	10 –14
20–50 mm	8–12
25–60 mm	6–10
35–80 mm	5–8
50–100 mm	4–6
70–120 mm	4–5
80–150 mm	3–4
120–350 mm	2–3
250–600 mm	1,4–2
500–3000 mm	0,75–1,25

Despite the above recommendations, please follow your supplier's advice!

3. Machine control

3.1. Starting the band saw

» 1. Switch on the **Main switch** of the band saw. The main switch is situated on the side of the switchboard.

2. Switch on the **Safety circuit** of the band saw **Safety circuit** (button **2**) on control panel of the band saw.

3.2. Control panel

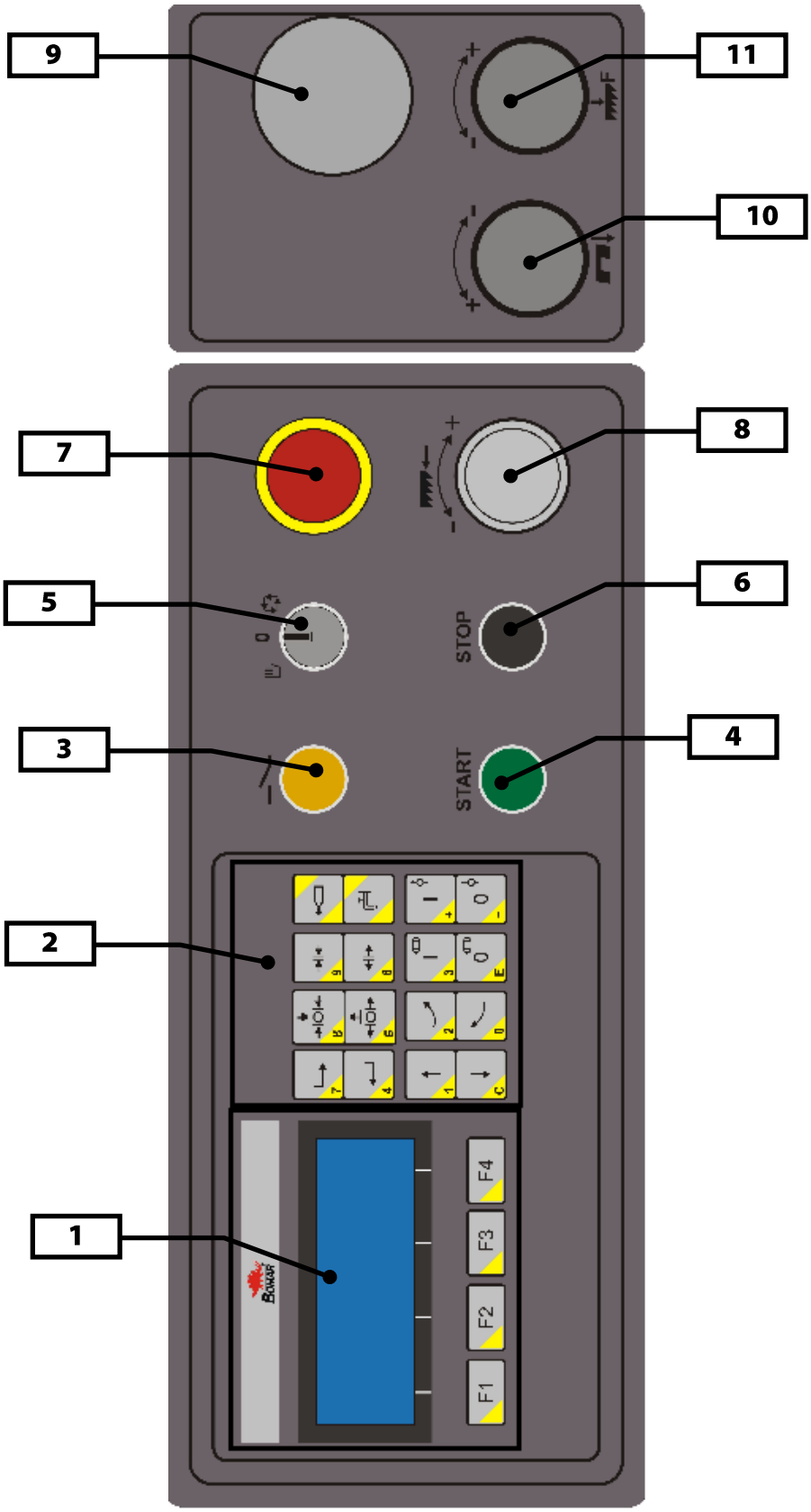

3.2.1. Control panel description

1	**LCD Display** Onto display are described all runnind processes, control with functional buttons **F1-F4**
2	**Control buttons / numeric keypad**
7 4	**GH version – no function** **DGH version – vice movement right/left**
8 5	**Clamp / release vice clamp**
9 6	**Clamp / release vice** In manual cycle pressing and holding the button allows you to release pressure or clamping vise. .
	Cooling system selection Cooling with Microniser (optional cccessories) Cooling with water cooling pump runs even when the saw band drive isswitch off.
1 C	**Movement of the arm** Pressing and holding a button or trigger arm lifts the lifting hydraulic cylinder. When lifting the arm using the arm can be lifted in its entirety lifting cylinder. On the down can be activated by simultaneously pressing the **rapid move** functional button F1.
2 0	**No function**
I 3 0 E	**Turn on / off the band drive** In manual mode the button is displayed "I" switched band drive, the button with the symbol "0" switch off
I + 0 -	**Turn on / off the hydraulic circuit** Button with the symbol "I" turns the hydraulic circuit, the button with the symbol "0" disables the hydraulic circuit. The hydraulic circuit is automatically switched on when needed.
3	**Safety circuit** Switch on the safety circuit by pressing button.
4	**Button START - Switch on the semi-automatic cycle** After pressing the button will start the cutting cycle

5	**Selecting a mode machines** 0 for servicing and settings manual mode semi-automatic mode **Note**: The functions performed in both manual and semi-automatic mode are the same, but only in semi-automatic cycle it is possible to use the START / STOP (ie start / off cycle)
6	**Button STOP - Switch off on the semi-automatic cycle** After pressing the button will turn off the interruption or of cutting cycle
7	**Emergency Stop Switch** In emergency causes the machine must be immediately switched off.
8	**Frequency convertor** Turn to change the speed of the saw band in the range of 20-120 m / min
9	**Cutting pressure manometer** Pointer to cut pressure adjustment
10	**Cutting pressure regulation** Adjust the arm pressure to the cut. **Notice!** If you keep closing the throttle valve too tightly, the valve seat may wear off which causes its leakage. Therefore, close the valve always gently.
11	**Governing valve for adjust the spped of the arm sinking to the cut** Adjust the speed of the arm sinking to the cut by governing valve. **Notice!** If you keep closing the throttle valve too tightly, the valve seat may wear off which causes its leakage. Therefore, close the valve always gently.

3.3. Machine setup

Machine setup mode is activated by switch on control panel. Switch must be in **"0"** position.

After swiching into position "0" is displayed on LCD this screen.

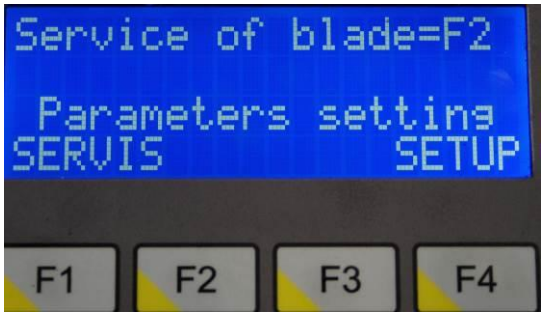

3.3.1. SERVIS

After pressing the **F1** functional key can be set servis parameters that are password protected (947).

Control and movement in SERVIS can be set using the function keys **F1 - F4.**

On display	Descriptiom
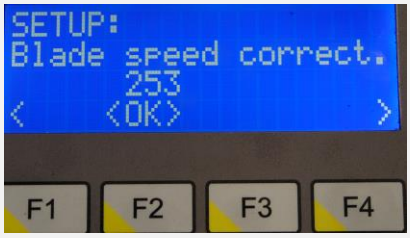	**Blade speed correction** • Constant for calculation of blade speed display values from analog input. • **F1** go back, **F4** next menu screen, **F2** enter value
	Sensor • Display variable sensor arm (optional accessories) • Use to check the functionality of the sensor on the arm • Read only • **F1** go back, **F4** next menu screen
	Vice clamping time • Watch vice clamping time in ms. • **F1** go back, **F4** next menu screen, **F2** enter value
	The type of machine. • Display the machine type (the value set by the manufacturer) • Read only

3.3.2. SETUP

After pressing the **F4** functional key can be set setup parameters that are not password protected.

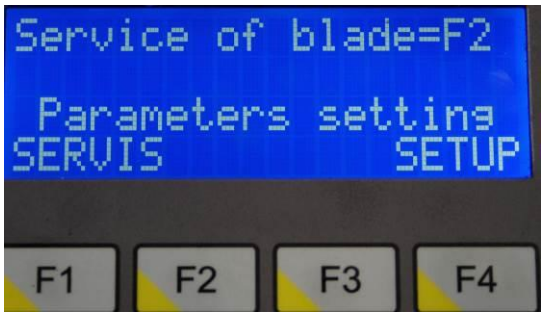

Control and movement in SETUP can be set using the function keys **F1 - F4.**

On display	Description
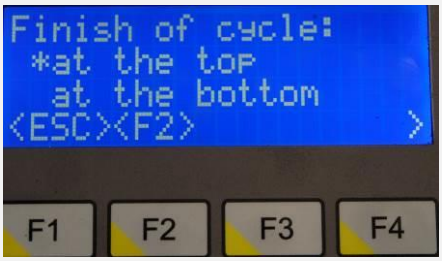	**Finish of cycle** • At the top – arm after cut starts above the material and cutting cycle ends • Athe the bottom – arm after cut remains in the lower position, the above material does not exit • **F1** go back, **F4** next menu screen, **F2** enter value
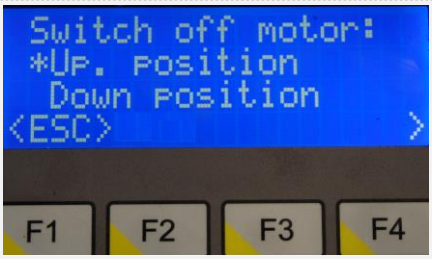	**Turn off motor after cut** • Up position – saw arm move up after cut and then turn off drive of saw blade. • Down position – drive of saw band turn off immediately after cut. • **F1** go back, **F4** next menu screen
	Upper vice • Allows to able / disable the upper vice in the cutting process • **F1** go back, **F4** next menu screen, **F2** enter value
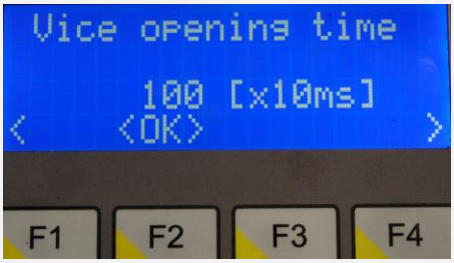	**Vice mening time** • Watch vice opening time in ms. • **F1** go back, **F4** next menu screen, **F2** enter value

Upper vice opening time

- Watch upper vice opening time in ms.
- **F1** go back, **F4** next menu screen, **F2** enter value

Switch off hydraulic

- Setting the hydraulic unit off when idle machines
- **F1** go back, **F4** next menu screen, **F2** enter value

Language

- Choose menu language
- **F1** go back, **F4** next menu screen, **F2** enter value

Displaying of speed

- Displaying of band speed according to the selected units
  (m / min or ft / min)
- **F1** go back, **F4** next menu screen, **F2** enter value

3.4. Machine control - standard

3.4.1. Manual mode

After machine is switched to manual mode these information are displayed at LCD:

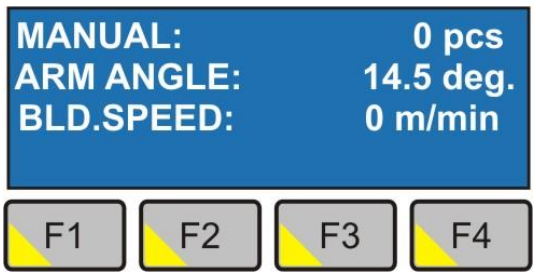

In manual mode operator can control all saw devices and movements with buttons at the control panel.

It is possible to use the manual mode for manipulation with material before starting of semiautomatic cycle.

3.4.2. Semi-automatic cycle

1. Lift the saw arm to the top position by pressing button 1.
2. Open the vice by pressing button 6.
3. Clamp material to the vice by pressing button 9.
4. Lower the frame about 10 mm above the material by button c.

> ***Attention!***
> *Do not move the saw frame to the material, when the saw band driving is not running! Do not move the saw frame to the material with accelerated motion! The saw band can be damaged!*

5. Select the max. height of the arm with limit switch.

   You can clear the register of the performed cycles by button F3 and stop on 5 seconds.

6. Press button **START** (position **4**) of semi-automatic cycle.

   Set the saw band speed according to the kind of the cutting material.

   Set the speed of the arm sinking by adjust **governing valve** (position **10**).

> ***Attention!***
> *Press button „5" (STOP of semi-automatic cycle). In risk of injury or damage of the band saw, press the Emergency Stop Switch "10"!*

7. The band saw clamps the material to the vice and it makes the cut.

   Note:

   The saw will not start cutting unless the limit switch for detecting the upper position of the arm is closed.

   In case of difficulty in starting the cut, activate the upward movement of the arm and hold the control until the movement of the arm stops due to the closing of the switch with the limit stop surface. You can then start the cut by pressing the START button.

8. Open the vice. If the vice is not opened, you can open it by button 6. Remove the blank (cut off a piece of material).
9. You can repeat whole process.

3.5. Machine control – automatic setting of the angle of the saw arm (optional accessory)

3.5.1. Manual mode

If the machine is referenced properly these information are displayed at LCD:

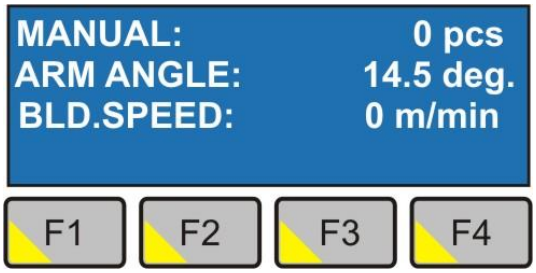

In manual mode operator can control all saw devices and movements with buttons at the control panel.

It is possible to use the manual mode for manipulation with material before starting of semiautomatic cycle.

3.5.2. Semi-automatic cycle

Referencing of the machine:

Semiautomatic mode works only if machine is properly referenced.

It is possible to start the process of referencing when the "**Saw's operating mode"** switcher is fturned to automatic mode first time.

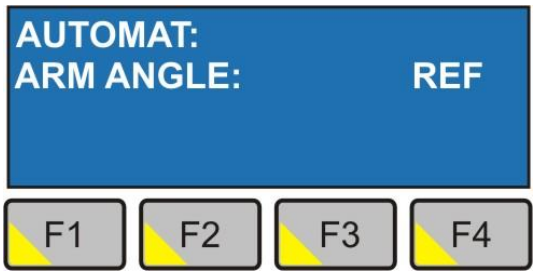

1. When "**Saw's operating mode"** switcher is fturned to automatic mode first time the screen for machine referencing is shown at the display and the button START is blinking.
2. Push Start button to start referencing of the machine. Movements for referencing: saw arm is lifted to the upper pos., vice is fully opened and moved into right position, saw arm is turned into max. right position and then into 0˚ position.

Semiautomatic cutting proces:

1. Switch "**Saw's operating mode"** switcher into MANUAL mode
2. Lift the saw arm to the top position by pressing button .
3. Open the vice by pressing button .
4. Clamp material to the vice by pressing button .

5. Lower the frame about **10 mm above the material** by button ↓ c.

Attention!
Do not move the saw frame to the material, when the saw band driving is not running! Do not move the saw frame to the material with accelerated motion! The saw band can be damaged!

6. Select the max. height of the arm with limit switch.

7. Switch "**Saw's operating mode"** switcher into AUTOMATIC mode

8. Set the angle of the saw arm

» **Angular cut setting**

- When the "Saw's operating mode" switch is turned to automatic mode a screen for information about actual state is shown

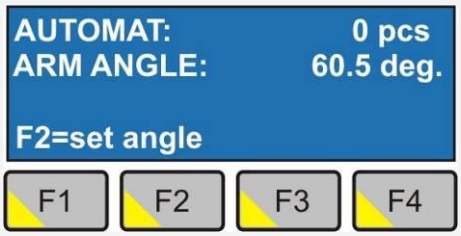

AUTOMAT – the number of the pieces which have been cutted

You can clear the register of the performed cycles by button F3 and stop on 5 seconds.

ARM ANGLE –actual angle of the saw arm

- When the button **F2** is pushed, the screen for setting of the angle of the saw arm is shown.

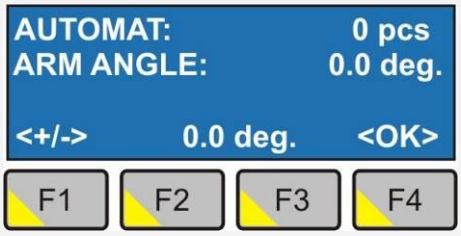

- It is possible to change – + of the angle using the button F1 (clockwise/ counterclockwise).
- It is possible to insert the numerical value of the angle after pushing of the button F2 using the buttons with numerical values in yellow triangles – for example:: 1, 6.

- It is possible to adjust the saw arm to specified angle by pushing and holding of the START button (the button is blinking). The main vice is automatically opened and moved to the right position in accordance with the value of the aggle which was set.
  For adjusting of the angle the button must be pressed for the whole time, otherwise adjusting of the angle is interrupted.
- After the angle was adjusted a silmilar information is shown at the LCD.
  ARM ANGLE – the angle at which the arm is currently set
- Enter the inserted angle to the control system pushing the button **F4** and then the screen for starting fo cutting proces will be shown.

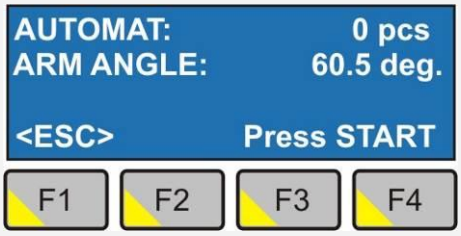

9. Press button **START** (position **4**) of semi-automatic cycle.

   Set the saw band speed according to the kind of the cutting material.

   Set the speed of the arm sinking by adjust **governing valve** (position **10**).

> ***Attention!***
> *Press button „5" (STOP of semi-automatic cycle). In risk of injury or damage of the band saw, press the Emergency Stop Switch "10"!*

10. The band saw clamps the material to the vice and it makes the cut.

    Note:

    The saw will not start cutting unless the limit switch for detecting the upper position of the arm is closed.

    In case of difficulty in starting the cut, activate the upward movement of the arm and hold the control until the movement of the arm stops due to the closing of the switch with the limit stop surface. You can then start the cut by pressing the START button.

11. Open the vice. If the vice is not opened, you can open it by button
    Remove the blank (cut off a piece of material).

12. You can repeat whole process.

3.6. Cycle breaking

»

- **STOP button**

  Semi-automatic cycle is interrupted by pressing button **STOP** (position **6**) of the semi-automatic cycle.

  The arm is lifted to the top position and the saw band drive is stopped..

  By pressing button ***START*** (position **4**) of the semi-automatic cycle, you can start the cycle.

- **Emergency Stop Switch**

  In case of the risk, press button **Emergency Stop Switch** (position **7**).

  After pressing button, saw band drive is immediately broken and the arm sinking is stopped.

- **Reactivation**

  1. Turn button **Emergency Stop Switch** according to the arrows (on the button).
  2. Switch on the **Safety circuit** by button (position **3**).
  3. By pressing button **START** (position **4**) of the semi-automatic cycle), you can start the cycle. The arm is lifted to the top position and the saw band starts the cycle.

3.7. Machine error messages

Error	Information
	Saffety button (pos. 2 on kontrol panel) is not ON. Press **F4** to confirm error.
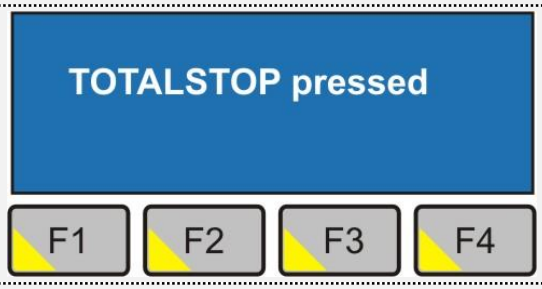	Emergency Stop Switch is active. Turn button according to the arrows. Press **F4** to confirm error.
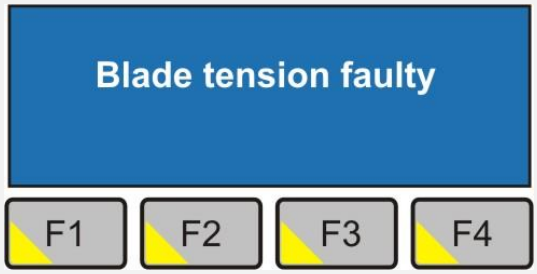	Saw blade in properly tensioned. Press **F4** to confirm error.

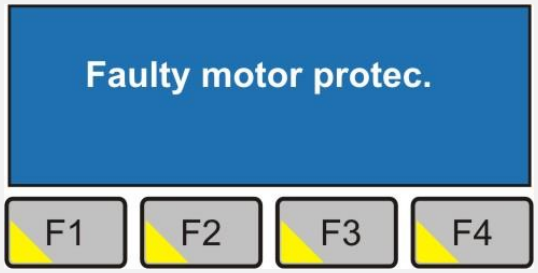

Engine temperature protection is active.
Do not overload saw!
Press **F4** to confirm error.

3.8. Band saw adjusting

3.8.1. Angular cut setting (standard machine)

The machine enables angular cuts under **± 60°.** The cut angle can be set fluently from **0°** to **60°** on both sides.

1. Release securing lever of the console.

2. Swivel the frame to the desired angle by pulling the saw arm. Angle is shown on scale (see arrow

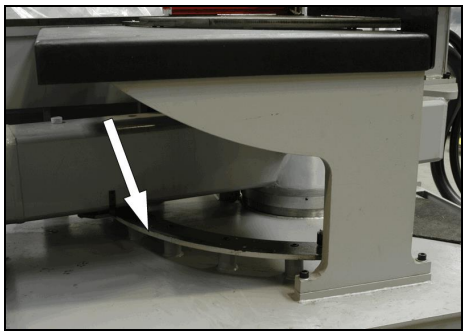

3. After cutting angle setup tighten securing lever.

Attention!
Moving parts of the vice must be moved when saw arm has zero angle of rotation and closed vice jaws.
Moving vice jaw of vice must be in endmost position otherwise there is a danger of collision saw arm with vice.

3.8.2. Electronic measuring device (optional accessories)

Zero position setting

1. Turn the unit which is measured with this device to a zero position or put it to zero state (for example turnthe saw arm to the zero angle or stop movement of the saw arm)

2. Push the Incr/Abs key (even several times) until "0" is shown on the display.

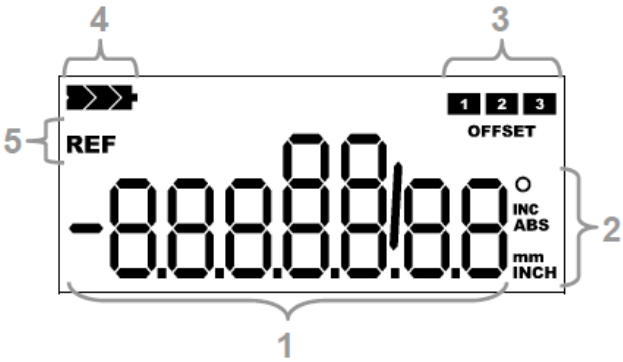

Digital measuring adjustment

Position	Description
1	Current position
2	Unit, measuring mode
3	Active additional constant (* key)
4	Battery status
5	Reference record shall be made – after the apparatus is switched on.

Description of key functions:

Key	Stop mode	Setting mode
F P	Basic key	Entering parameters (3 sec) Saving parameters and returning (3 sec)
F P + Set	Reference recording (P09 value)	-
Set	Change of displaying in inches	Selection of following decade
Incr / Abs	Absolute and incremental measuring	Change of active decade o +1

Key	Stop mode	Setting mode
* +\-	Selection of additional constant	Change of sign •

Description of key functions at measuring initialisation:

Key	Description
F P	Induces calibration of the apparatus when it is switched on (battery inserted).
Incr / ↑ Abs	Induces calibration of the apparatus and sets default values when the apparatus is switched on.

Description of digital measuring parameters:

Parameter	Description	Default value
P01 A	Measuring configuration: A = 0: positive direction of measuring A = 1: negative direction of measuring	0
P02 A	Measuring unit: A = 0: mm / symbol "mm" A = 1: inch / symbol "Inch" A = 2: mm / symbol "m" A = 3: mm / symbol "°" A = 4: mm / no symbol	0
P03 A	Decimal point (0…4) > only for mm	2
P05 ABC	Key blocking: A: "Set" key (0 = active / 1 = inactive) B: "Incr/Abs" key (0 = active / 1 = inactive) C: "*" key (0 = active / 1 = inactive)	000
P08	Correction factor (0.0001…9.9999)	1.0000
P09	Reference (-9999999 … +9999999)	0
P10	Additional constant 1 (-9999999 … +9999999)	0
P11	Additional constant 2 (-9999999 … +9999999)	0
P12	Additional constant 3 (-9999999 … +9999999)	0
P13 A	Configuration of additional constants (0…3) A = 0: inactive (cannot be selected) A = 1: Additional constant 1 active A = 2: Additional constants 1 & 2 active A = 3: Additional constants 1 & 2 & 3 active	3
P90	No function	0
P99	Displaying firmware version	x.xx

3.8.2.1. Electronic angular cut setting (optional accessory)

Desired cutting angle is shown on LCD. How to use electronic admeasurement is described in special instruction manual.

Intended for applications with frequent mitre cuts

The digital indicator of the arm turning angle prevents possible mistakes caused by inaccurate reading of an angle on the scale, and increases the speed of preparation for cutting. In connection with LaserLine, the digital indicator will make every band saw the most effective tool for mitre cuts.

A large, easy to read display and accurate measuring of the arm position with a magnetic tape allow the angle to be set with the maximum accuracy.

The measuring unit is set by the manufacturer. However, its further functions may be easily controlled with four keys.

3.8.2.2. Speed adjustment of the arm lowering (optional accessory)

The current speed of vertical movement of the arm is displayed on a digital display which is mounted on the saw arm.

The measuring unit is set by the manufacture.

3.8.3. Adjusting band guides

If you want to achieve a smooth and precise cut, it is helpful to position the guide cube as close as possible to the material.

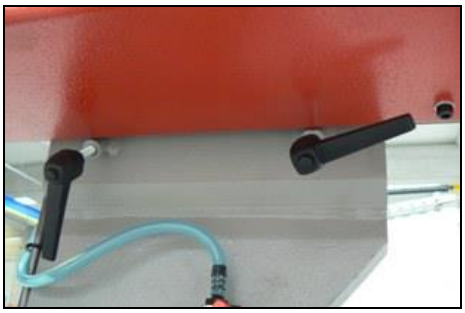

1. Press button ***STOP*** (position **6**) to switch off the hydraulics and stop on 2 second.
2. Release the stopping lever of the listel (see picture).
3. Move the left part of the guide apparatus so that the left guide cube edge is as close to the cut material as possible.
4. Tighten the lever of the gib and check the guide cube setting for possible collision with binding table or vice jaw.

3.8.4. Cutting speed adjusting

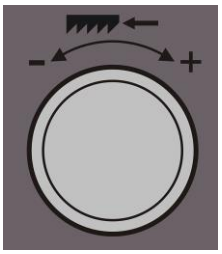

Speed of the saw band is possible change from ***20*** to ***120 m/min***. You can effect to adjusting speed of the saw band following.

Use the frequency convertor by button **8** on control panel to adjust requested speed of the saw band. You can see the speed on display. Band speed is displayed on the Display **1** on control panel during one semi-automatic cycle.

3.8.5. Adjustment of pressure to the cut

The band saw is equipped with cutting pressure regulation on the both guiding cubes.

Pressure adjusting is performed with governing valve **11** on control panel. The pressure to the cut is displayed on the cutting pressure manometer **9** on control panel**.**

Notice:
Guiding cubes are equiped with taps which must be opened during operation!

- **Lower** pressure to the cut – turn the wheel **against the clock's** direction.
- **Higher** pressure to the cut – turn the wheel **to the clock's** direction.

Diagram for cutting pressure on ADFR (automatic downfeed regulation) ,
Hydraulic pressure recommended on the aggregate unit 6 Mpa

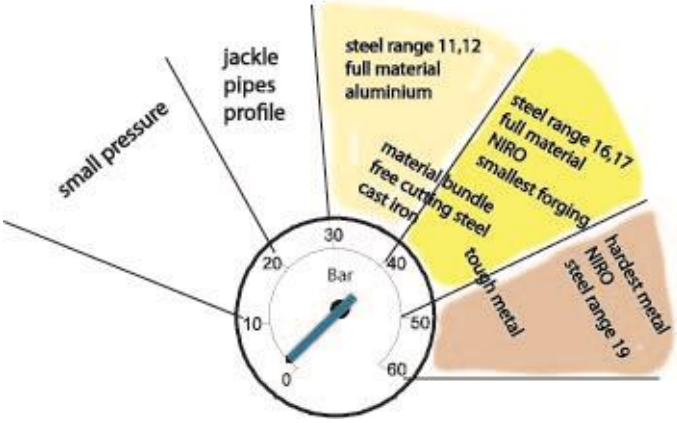

Notice:
If you keep closing the throttle valve too tightly, the valve seat may wear off which causes its leakage. Therefore, close the valve always gently.

3.8.6. Speed adjustment of the arm lowering

Set the speed of the arm lowering to the cut by control valve for Cutting pressure regulation **10** on control panel.

- Set the **lower** speed of the arm lowering to the cut by turning the switch **clockwise.**
- Set the **higher** speed of the arm lowering to the cut by turning the switch **anti-clockwise**.

Notice:
If you keep closing the throttle valve too tightly, the valve seat may wear off which causes its leakage. Therefore, close the valve always gently.

3.8.7. Saw frame lift stop setting

If you want to shorten the time of operations in automatic cycle, you have to adjust the height of the saw arm according to the height of the cutting material.

Notice:
Arm Position is monitored by a limit switch. If the limit switch lever hits the bar and goes, then you can not run a semi-automatic cycle.

1. Height adjustment is sensed by a limit switch
2. Press button ↑ 1 and lift the saw arm to the upper position.
3. Insert a material into the vice. Carefully lower the saw arm button ↓ C to the material (or ↓ C + **F1** for **rapid move**)
4. Stop the saw arm 10mm above the material.
5. The lift stop setting is sensed by the limit switch

   Set the stop just above arm height sensor - slide stop turning the locking knob close to the limit switch

3.8.8. Saw arm lower position stop adjustment

The lower stop limits the lowest position of the saw arm. This stop point has to be checked at least once a month. If the lower stop point is wrongly adjusted, the cutting table can be deeply cut or the material will not be cut completely.

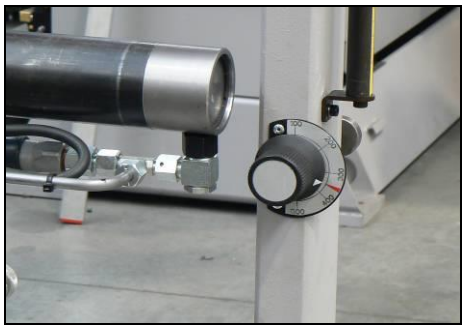

Adjusting of the saw arm lower position stop is adjusted by adjustable excenter on saw arm pile.

3.8.9. Brush adjustment

The brush for chip removal from the saw band influences cutting durability, saw band lifetime and wheels lifetime, hard metal guides and finally the cut accuracy. Brush adjustment must be checked every shift.

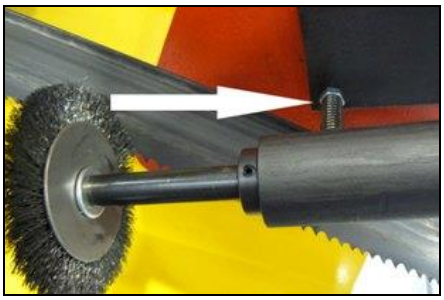

1. Release the fixative screw of the brush. It is possible to move with the brush.
2. Set the brush to the saw band according to the picture.

Attention!
*The brush **must not** touch the bottom of the saw teeth!*

3. Tighten the fixative screw.

Attention!
The screw must not be tightened with heavy force, because driving wheel of the brush can be damaged or the lifetime of the bearings of the driving wheel of the band can be lowered!

4. In case, that the brush is not turned right (driving wheel slips on the driving wheels of the saw band), push by means of the screw (see arrow) driving wheel of the brush to the driving wheel of the saw band.

3.9. Material insertion

- Never walk under a suspended load!
- Never climb onto the gravity-roller conveyor!
- Do not hold the material for clamping material to the vice! The vice can cause injury!

3.9.1. Handling agent selection

- Use the strong handling agents to lift and transfer the material!
- Handle with the material only with the lift truck or use the suspension strands and the crane!
- Do not use the lift truck or crane in case that you do not have the license to handle with it!

3.9.2. Insertion

Insert material to the vice and ensure that the material cannot move in the vice or fall from the vice after the clamping. If you cut long pieces of the material (for example rod, tube), you must use the roller conveyors for material shifting to the band saw. Contact Bomar for more information about roller conveyors

Make sure the conveyor is long enough and the material cannot tip off the conveyor.

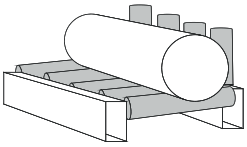

Be especially careful with round materials that it always stays on two vertical rollers and that it cannot fall off the conveyor!

3.9.3. Bundle material cutting

If you want to cut the material in the bundle, there are suggestions for the positioning of bundles

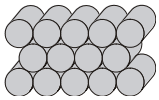

Round material bundle: Take care especially with round material that the bars are put according to the picture. If the bars are put differently, you may have problems with movement.

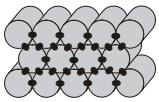

Always weld the material at the rear end of the bundle to secure it from moving.

Before welding always, switch the machine off at the main switch! The magnetic fields, which often occur during welding, may damage the controls!

Square material bundle:

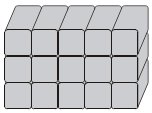

Attention:
Not all material shapes are suitable for bundle cuts. Keep the recommendation of your supplier of the saw bands for material insertion to the bundle.

4. Machine service

4.1. Saw band dismantling

1. Lift the saw arm to maximum position.
2. ***STOP hydraulic*** with button.

3. Open all three covers on the saw arm.

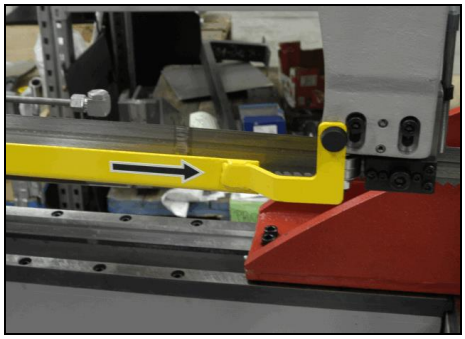

4. Dismantle left protective cover of the band (arrow). Cover is fastened by screws..
5. Release the screw holding the brush. Turn the brush to the side

6. Turn by stretching star to the left side, release saw band stretching and pull down the saw band from the wheels.

7. Pull down the band from the wheels.
8. Pull up the saw band from the guiding cubes.

4.2. Saw band installation

1. Prior to installation, clean all track wheels, guide cubes and inner side of the arm thoroughly of all traces of chips and dirt. *Keep in mind the teeth direction when installing the saw band.*
2. Insert new saw band in the guide cubes. Make sure the saw band runs between both guide rollers and it is pushed all the way to the top.
3. Put the saw band on both guide wheels. Make sure that the saw band ridge fits tightly to the wheel rim. Then push the saw band as far back as possible.
4. Stretch the saw band by means of the screw, that the band did not falls from wheels.
5. Install yellow protective cover of the band.
6. Move the brush to the saw band. Tighten the securing screw.
7. Close the covers of both driving wheels.
8. Saw band installation is finished.

4.3. Saw band stretching and inspection

Right saw band stretching is one of the most important criteria's, which influents accuracy and saw band service life. Stretch the saw bands according to the selected saw band and the band saw. Keep the recommendation of your manufacturer.

4.3.1. Saw band stretching

- Switch on the hydraulic aggregate after the saw band installation check the saw band stretching on the manometer (arrow 1).

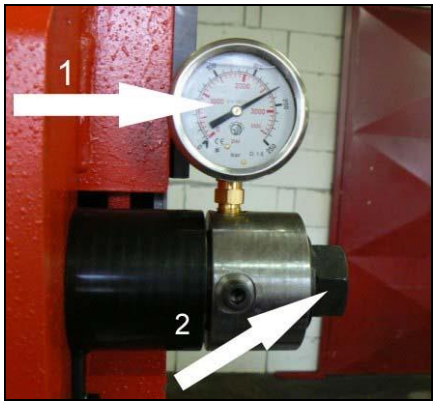

- Use the screw (arrow 2) to stretch the saw band until it is stretched to the recommended value.

4.3.2. Saw band inspection

Check the saw band in the guiding cubes and on the wheels

1. Check, if the saw band is right in the guiding cubes..
2. Switch on the saw band drive and then after 10 seconds switch off saw band drive. If the saw band drive is not possible to switch on, set the limit switch of the saw band stretching.
3. Switch off the main switch.
4. Open cover(s) of the wheels and check position of the saw band on the both wheels..

- If the distance between backside of the saw band and the offset wheel is **1 mm**, setting is right..
- If the distance is bigger than **1 mm**, or the saw band is on the offset of the wheel, set the saw band.

5. Close cover of the saw band.

4.3.3. Saw band run setting

Saw band run is set with screw (arrow) in the stretching cube on the saw arm. Right distance rear part of the saw band from wheel rim is **1 – 3 mm**.

- Turn with the screw to the right, the saw band is closer to the stretching wheel rim.
- Turn with the screw to the left, the saw band is far from the stretching wheel rim

Check saw band run adjustment again.

4.3.4. Adjusting of the limit switch of the saw band stretching

After the saw band is replaced, the saw band stretching must be checked. If the limit switch is not adjusted correctly, the band is stretched too little or too much.

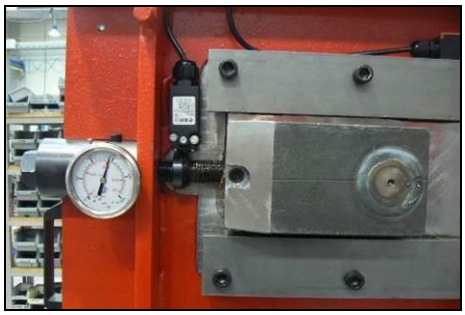

- Tighten the saw band by means of the TENZOMAT on the optimal value (table is on the Tenzomat).

- If the drive engine is switched on, but it is not running, turn with the screw clockwise, until the engine begins run..
- If the drive engine is possible switched on, turn with the screw anticlockwise, until the engine is stopped and then turn with the screw clockwise, until the engine begins run.

4.4. Cooling agents and chips disposal

The quality of the cooling agent will deteriorate due to:	If the solution is too weak:	If the solution is too strong:
• use of contaminated water • impurity • outside oil contamination (hydraulics, gears) • high operating temperatures • lack of air circulation • wrong concentration	• corrosion protection is diminished • lubrication decreases • microbial attack is more likely	• the cooling ability is decreased • foam behaviour increases • emulsions stability deteriorates • sticky residue develops

4.4.1. Coolant device inspection

The state of the cooling agent has significant influence on the cutting quality and on the operational life of the machine. Lifetime of the cooling liquid is 1 year, after this time we recommend change the cooling liquid. This time is dependent on the degree of pollution cooling liquid (especially with oils) and on the other factors.

Check level of the cooling liquid and function of the pump periodically!

> ***Note:***
> *If the state of the cooling liquid is not satisfactory, the cooling liquid must be changed.*

Check the state of the cooling agent according to the following table:

Testing	Interval	Method	Condition	Precaution
Liquid level	daily	visually	too low	after concentration check, refill with water or emulsion
Concentration	daily	refractometer densimeter	too high too low	refill water refill base emulsion
Smell	daily	by sense of smell	unpleasant smell	good ventilation, add biocides or renew coolant
Contamination	daily	by sense of smell	visible oil leaks, sludge fungi	surface cleaning, fix leaks, add biocides or fungicides, or coolant renewal after added system cleanser*
Corrosion-protection	when necessary	visually chip test Herbert-test	insufficient corrosion protection	test stability, if necessary – increase concentration or pH value
Stability	when necessary	refractometer	oiling	add concentrate, enquiries to supplier
Foam reaction	when necessary	shaking test	too much foam, foam disperses too slowly	avoid aeration, increase water hardness, ix with defoamer

* According to manufacturers' instructions

4.4.2. Chips disposal

Chips resulting from cutting operations must be disposed of in accordance with the relevant regulations.

- Let the chips drip excess fluid!.
- Fill a watertight container with the chips! Be careful that the container does not leak, because even after a long dripping time, they still contain coolant residue.
- *Place the container into the care of a disposal company equipped for the disposal of chips contaminated with cooling liquid.* In case the machine is equipped with micro-spray installation, the chips must also be handed over to a disposal company.

4.5. Hydraulic, Greases and oils

4.5.1. Gearbox oils

In gearboxes, oil is used for the whole lifetime of the gearbox. We recommend replacing of the filling oil in case of repair.

Use oils with specification DIN 51517 in the gearboxes. Select the viscosity grade ISO VG according to the original oil fill.

Attention:
When replacing, use oils recommended by BOMAR or oils, which has comparable parameters from the other manufacturers. Do not forget, that mineral and synthetic oils must not be mixed!

Recommended oils and quantity according to the type of the band saw

Band saw	Gearbox oil	Capacity
Individual 820.640 DGH	Shell Tivela S 320	3,3 l
Swarf conveyor	Shell Tivela S 320	0,075 l

Comparative table of the gearbox oils

Manufacturer	Viscosity grade		
	ISO VG 100	ISO VG 220	ISO VG 320
BP	Energol GR-XP 100	Energol GR-XP 220	Energol GR-XP 320
Castrol	Alpha SP 100 Alpha MW 100	Alpha SP 220 Alpha MW 220	
Elf	Reductelf SP 100	Reductelf SP 220 Reductelf Synthese 220	Reductelf SP 320
Esso	Spartan EP 100	Spartan EP 220	Spartan EP 320
Mobil	Mobilgear 627	Mobilgear SHC 220 Mobilgear 630	Mobilgear 632
ÖMV		PG 220	
Paramo	PP 7	Paramo CLP 220	Paramo CLP 320
Shell	Shell Omala 100	Shell Omala 220 Shell Tivela S 220	Shell Omala 320 Shell Tivela S 320
Total	Carter EP 100	Carter EP 220	Carter EP 320

4.5.2. Lubricant greases

We recommend using lithium based saponified grease, class NGLI-2 for lubrication. Different greases are mixable, if their oil bases and consistence type are identical.

Comparative table of the lubricant greases:

Manufacturer	Type of the lubricant grease
BP	Energrease LS - EP
DEA	Paragon EP1
Esso	FETT EGL 3144
	Beacon EP 1
	Beacon EP 2
FINA	FINA LICAL M12
Klüber	Microlube GB0
	Staburags NBU8EP
	Isoflex Spezial
Optimol	Optimol Longtime PD 0, PD1, PD2
Shell Aseol AG	ASEOL Litea EP 806-077
Texaco	Multifak EP1

4.5.3. Lubrication

There are several placing on the machine, which are necessary to grease periodically. It secures the right function of the machine.

Lubrication place	Lubrication
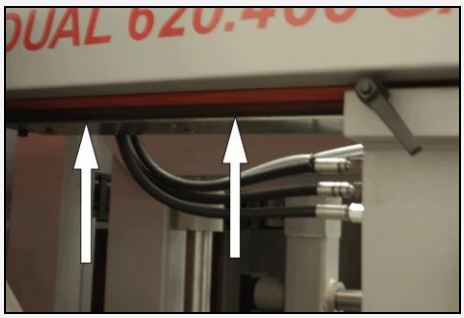	The guiding cubes leading – grease with oil from both sides once a week.
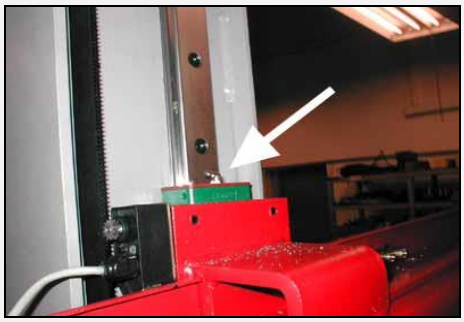	The linear guiding of the saw arm – lubricate with grease once a three months (see chapter **Lubricant greases**). Use 3-5g grease on the every carriage of the linear guiding. Use the grease gun to the lubrication. Drive 3-5 times whole line of the linear guiding during lubrication.

4.5.4. Hydraulic oils

Replace the hydraulic oil once in 2 years, because the oil can deteriorate its properties and cause problems the hydraulic equipment. If the hydraulic system is equipped with filter (2SF 56/48-0,063), replace the filter too.

Use oils with specification DIN 51524-HLP, ISO 6743-4 and viscosity grade ISO VG 46 in hydraulic aggregates. Hydraulic oils quantity – see chapter **Hydraulic oil level check**.

Note:
When replacing, use oils recommended by BOMAR or oils, which has comparable parameters from the other manufacturers. Do not forget, that mineral and synthetic oils may not be mixed!

Comparative table of the hydraulic oils

Manufacturer	Type	Manufacturer	Type
Agip	Oso 46	Ina	Hidraol 46 HD
Aral	Vitam GF 46	Klüber	Lamora HLP 46
Avia	Avilub RSL 46	Hungary	Hidrokomol P 46
Benzina	OH-HM 46	Mobil	Mobil DTE 25
BP	Energol HLP 46	ÖMV	HLP 46
Bulgaria	MX-M/46	Poland	Hydrol 30
Castrol	Hyspin AWS 46	Rumania	H 46 EP
Čepro	Mogul HM 46	Russia	IGP 30
DEA	Astron HLP 4hy6	Shell	Tellus Oil 46
Elf	Elfolna 46	Sun	Sunvis 846 WR
Esso	Nuto H 46	Texaco	Rando HD B 46
Fam	HD 5040	Valvoline	Ultramax AW 46
Fina	Hydran 46		

4.5.5. Hydraulic oil level check

Pull up the gauge and check the state of the oil. The oil level must be situated between water-glas.

Fill the hydraulic oil, if it is necessary. Use always the filter (10 μm or better) when you fill the oil. You avoid impurities penetration to the hydraulic system and troubles in hydraulic system.

4.6. Machine cleaning

Clean the machine from the cooling liquid and impurities after every shift stopping. Conserve the guiding surfaces, mainly.

- Clamping jaws guiding of the vice.
- The guiding of the feeder.
- Loading surface of the vice.

4.7. Worn pieces replacement

4.7.1. Pushing bearing replacement

If it is impossible to adjust the bundle gripping assembly and the pushing bearing is worn, it needs to be replaced

1. Dismantle the saw band.
2. Disconnect the hose from the cooling agent eventually unmount microniser.
3. Unmount guiding cube from holder on saw.

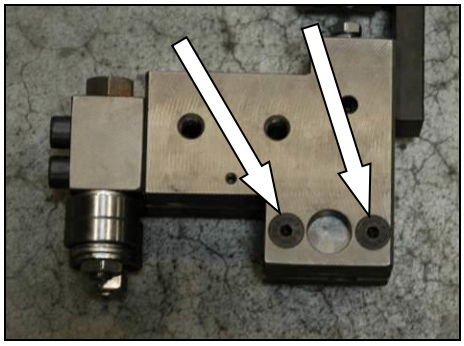

4. Loosen the 2 clamp screws solid carbide guides and remove them..
5. Remove fixed hardmertal.

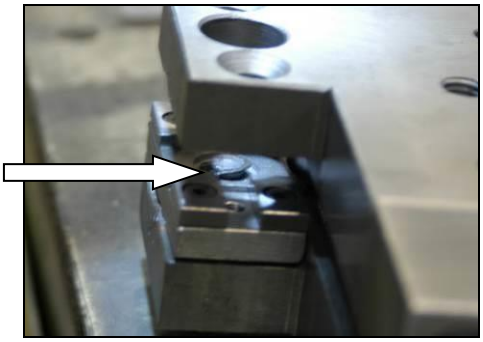

6. Remove retaining ring. Then unmount adjusting screw.

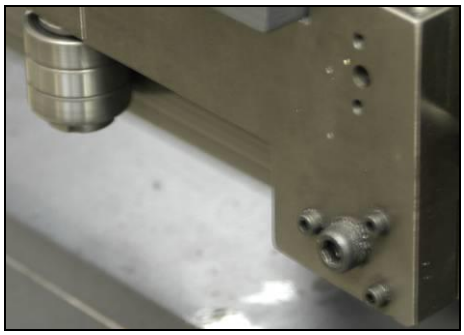

7. Remove other three screws.

8. Carefully remove the hardmetal. Remove disc springs.

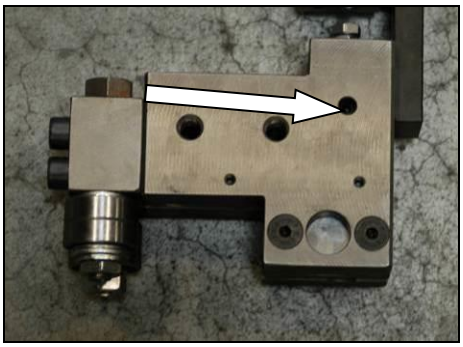

9. Loosen the mounting worm (allen wrench no. 3). Remove the pivot with bearing from the guiding cube.

10. Insert the pivot to the vice.

Attention:
The vice has aluminium jaws, eventually, there has to be an aluminium agent to protect the pivot from damage.

11. Remove the bearing pivot from the bearing holder by means of the swager.

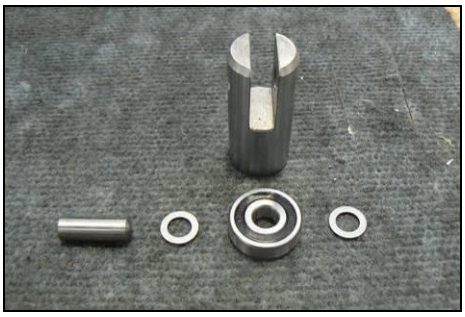

12. Remove the worn bearing and other damaged parts.
13. Fasten the holder to the vice.
14. Insert the bearing and washers and return the pivot to its original place.
15. Place the assembled piston guide cube. Piston must move freely in a guiding cube.
16. Worm screw defines the operation of the piston (piston has a slot in which is the worm). Tighten the worm, but with a minimum clearance to the piston could move.

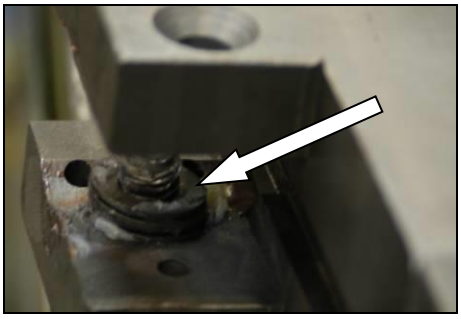

17. Insert the disc springs. The number of disc springs must match the number of dismantled springs. Disc springs are folded against each other 1 to 1 Odd plate spring is near the harmetal carbide.

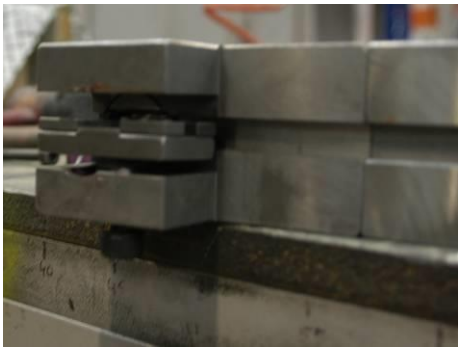

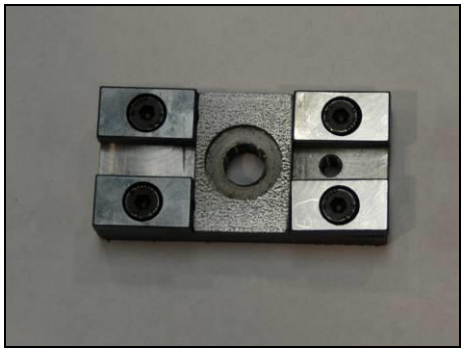

18. Insert the new hard metal guide. ***Attention,Do not lose disc springs.*** Ensure proper position of carbide guides – holes for 3 stop screws must be in the same position as the holes in a guiding cube.

19. Insert and tighten central screw.

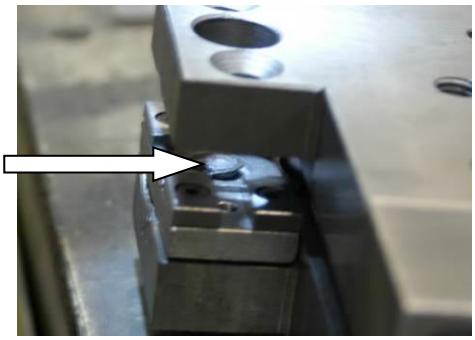

20. Insert the retaining ring on central screw.
21. Insert 3 stop screw around central screw.

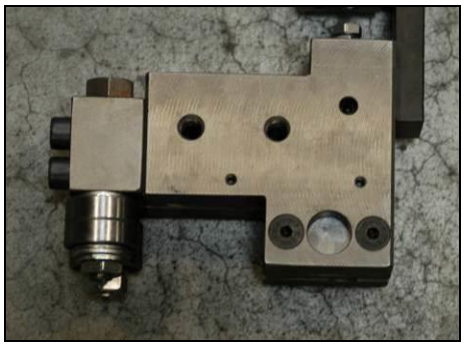

22. Insert fixed hardmetal guiding and mount hard metal with two screws.

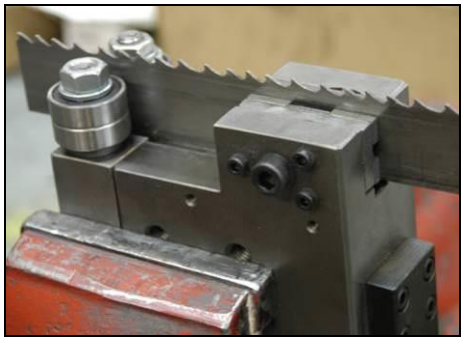

23. Using a short piece of the blade used on the machine, adjust the width of the gap between the guides. Loosen the central screw. Set the gap by central adjusting screw. Belt guides must walk freely without large and will also not scrub.

4.7.2. Saw band guiding pulleys replacement

Attention:
Guiding pulleys must be replaced together on both guiding cubes!

If the saw band is not sufficiently guided by guiding pulleys or if the pulleys are obviously worn, the pulleys should be replaced.

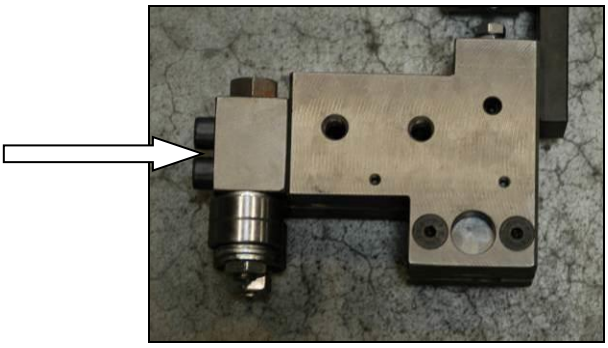

1. Release 2 screws. Dismantle the guiding cube of the saw band.

Attention:
Mark both eccentrics placing and components on the eccentric!
Eccentrics must not be replaced with each other!

2. Tighten the guiding cube to the vice and dismantle both eccentrics with bearings following way.
3. Screw off nuts from eccentrics.
4. Remove eccentrics from bearings by means of the swager.

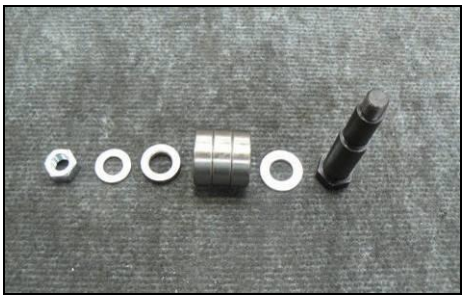

5. Change all bearings and other worn parts.
6. Install eccentrics to the cubes. Install components on both eccentrics in given order. Put bearings by means of the preparation on eccentrics.

Attention:
Do not replace the eccentrics placing in the cube.

7. Screw on nuts on both eccentrics and tighten them.

8. Insert the saw band to the guiding cube (cca 15 – 20 cm). Secure the movable hard metal guide with scotch so, that the saw band is pressed with guides and it is possible to move with saw band
9. Set the eccentrics by means of the wrenches, the saw band must run in the centre. Guide pulleys must not press too much on the band, but must spin freely during the band run

Optimal distance between the band and the pulley is 0,05 mm.

10. Tighten nuts on both eccentrics.
11. Remove the testing piece of saw band from the cube lead. Install the guiding cube on the machine.

4.7.3. Hard metal guides replacement

If the hard metal guides cannot be adjusted, they have to be replaced

ATTENTION!
Hard metal guides must be replaced together on both guiding cubes!!

1. Dismantle the saw band.
2. Disconnect the hose from the cooling agent eventually unmount microniser.
3. Unmount guiding cube from holder on saw.

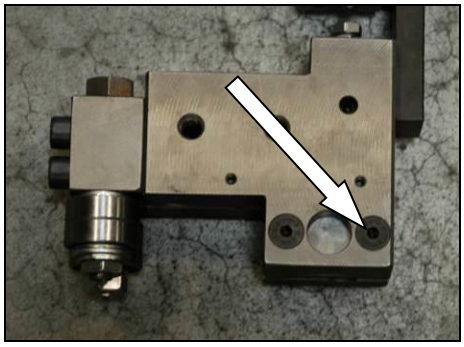

4. Loosen the 2 clamp screws solid carbide guides and remove them..
5. Remove fixed hardmertal.

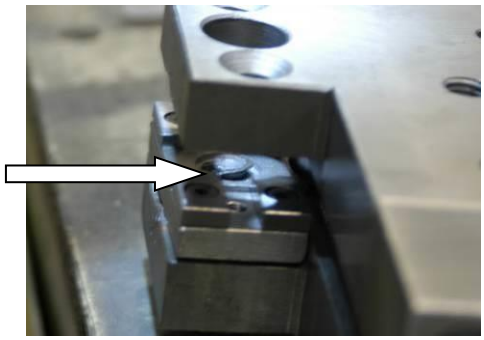

6. Remove retaining ring. Then unmount adjusting screw.

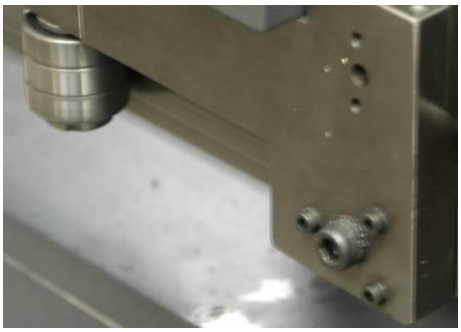

7. Remove other three screws. .

8. Carefully remove the hardmetal. ***Pozor, nesmí dojít ke ztrátě talířových pružin.***

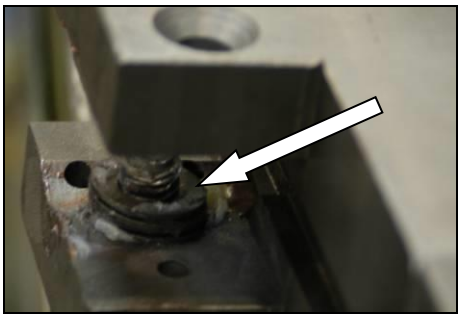

9. The number of disc springs must match the number of dismantled springs. Disc springs are folded against each other 1 to 1 Odd plate spring is near the harmetal carbide.

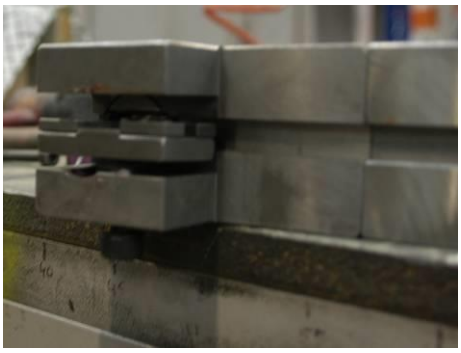

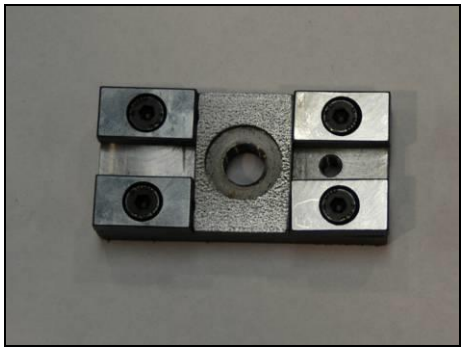

10. Insert the new hard metal guide. ***Attention,Do not lose disc springs.*** Ensure proper position of carbide guides – holes for 3 stop screws must be in the same position as the holes in a guiding cube.

11. Insert and tighten central screw.

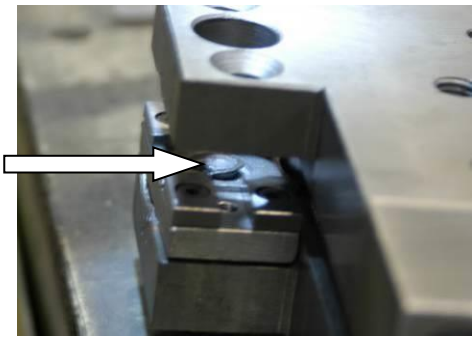

12. Insert the retaining ring on central screw.

13. Insert three stop screw around central screw.

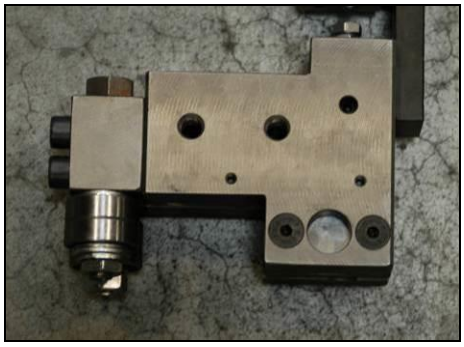

14. Insert fixed hardmetal guiding and mount hard metal with two screws.

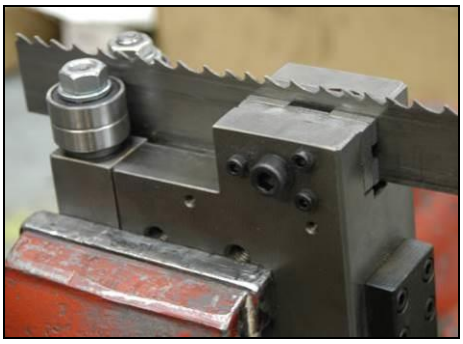

15. Using a short piece of the blade used on the machine, adjust the width of the gap between the guides. Loosen the central screw. Set the gap by central adjusting screw. Belt guides must walk freely without large and will also not scrub.

4.7.4. Brush replacement

If the chip removing brush is not able to fulfil its function, it has to be replaced.

1. Hold shaft of the brush by wrench.

2. Release the nut on the brush, replace worn brush on the new brush, and screw on the nut.
3. Set the brush to the saw band.

5. Troubleshooting

5.1. Mechanical problems

Problem	Possible causes	Repair
1. Slanting cut	- Wrongly adjusted hard metal guides.	Set according to the chapter „Servicing and adjustment“
	- Worn hard metal guides.	Replace to the chapter „Worn pieces replacement“
	- Wrongly adjusted cubes of the saw band guiding.	Set according to the chapter „Servicing and adjustment“
	- Worn bearings of the saw band guiding.	Replace according to the chapter „Worn pieces replacement“
	- Wrongly adjusted swarf brush.	Set according to the chapter „Servicing and adjustment“
	- Worn swarf brush.	Replace according to the chapter „Worn pieces replacement“
	- Insufficient saw band stretching.	Rise the saw band stretching and set the limit switch.
	- Wrongly chosen tooth system of the saw band.	Replace the saw band and keep the instructions of manufacturer on new saw band choice.
	- Worn saw band.	Replace the saw band.
	- Wrongly balanced roller conveyor.	Set the roller conveyor.
	- Dirty feeding board.	Cleanse the feeding board from debris, chip and residue material.
	- Guiding arm and guiding cube are loosened.	Clamp the guiding arm.
	- Guiding arm and cube are too far from the material.	Set the guiding cube to the material.
	- Too fast cutting rate.	Lower the material feeding speed.
	- Unexpected oscillation in material quality.	Set the cut and feeding speed to the relevant material.
2. The cut is not cut upon desired angle	- Securing lever is loosened.	Check the securing lever efficiency and carry out its adjustment according to chapter „Servicing and adjustment“.
	- Set angle does not match the cut angle.	Check the angle adjustment with a protractor and possibly set it according to chapter „Servicing and adjustment“.
	- Insufficient saw band stretching.	Stretch the saw band and set the limit switch according to chapter „Servicing and adjustment“.
	- Guiding arm and guiding cube are loosened.	Fasten the guiding arm and the cube.
	- Dirt between material and clamping jaw.	Cleanse the material and mating jaw.
3. Short lifetime of the saw band	- Insufficient saw band stretching.	Raise the tightening of the saw band set the scanner of saw band tightening according to chapter „Servicing and adjustment“.
	- Worn swarf brush.	Check the swarf brush condition and replace it in case of excessive use as described in chapter „Worn pieces replacement“
	- Wrongly adjusted swarf brush.	Check swarf brush adjustment, set it according to chapter „Servicing and adjustment“

Problem	Possible causes	Repair
	- Over stretched saw band	Lower stretching of the saw band and set the limit switch of the saw band stretching according to chapter „Servicing and adjustment“
	- Wrongly adjusted hard metal guides.	Check the adjustment of the hard metal guides and carry out adjustment as described in chapter „Servicing and adjustment“
	- Worn hard metal guides of the saw band.	Check the condition of the hard metal guide and if it is too worn, replace hard metal guides according to chapter „Worn pieces replacement“
	- Worn saw band guide bearings.	Check guiding bearings and if you notice some sort of excessive damage, replace them according to chapter„Worn pieces replacement“
	- Wrongly adjusted guiding cubes of the saw band.	Set guiding cube according to chapter „Servicing and adjustment“
	- Wrongly adjusted down feed and saw band speed.	Adjust the feeding and speed of a saw band according to values published by saw band manufacturer.
	- Different material quality.	Adjust feeding and speed of a saw band according to desired material (try cut-test).
	- Low-class saw band	Replace the saw band (contact your local accessory supplier for more information)
	- Wrongly chosen saw band tooth system.	Replace the saw band and keep instructions of the manufacturer on the choice.
	- Wrongly adjusted tracking.	Check the space between top of a saw band and driving wheel. Perhaps adjust the tracking as described in chapter „Servicing and adjustment“
4. Insufficient cut output.	- Worn saw band.	Replace the saw band and keep instructions of the manufacturer on the choice.
	- Wrong saw band tooth system.	Replace the saw band and keep instructions of the manufacturer on the choice.
	- Wrongly set down feed and speed of a saw band.	Set feed and speed of a saw band according to values published by saw band manufacturer.
5. The cut is not finished.	- Wrongly adjusted lower stop point of the saw frame.	Check lower limit switch and screw.
	- Stop point surface is messed-up.	Cleanse stop point surface of the limit switch from debris and residue material.
6. By choke is not possible turn	- Metal clamps between valve and panel.	Clamps must be removed and put on the shaft O-Ring about 10x2 mm.
	- Metal clams are in body of valve.	Valve must be cleared or changed.
7. Saw band drive cannot be started.	- Pressure switch is adjusted wrong.	Set the pressure switch according to chapter „Servicing and adjustment“
	- Pressure switch is defective.	Replace defective parts of the pressure switch.
8. The saw bands are cracked.	- In stretching wheel is wrong adjusting geometry.	Adjust distance band from recess wheel c.2 mm according to operating instructions.
	- Hard metal plates of circuit saw band are not adjusting.	Hard metal plates of circuit saw band must be adjusting according to operating instructions.

Problem	Possible causes	Repair
	- Guiding cubes are not adjusting (bearings + hard metal circuit)	Guiding cubes must be adjusting (bearings + hard metal circuit) according to operating instructions.
	- Bearings of guiding cubes are used (rolling elements are damaged or outside ring of bearing has conical form).	Bearings of guiding cubes must be replaced. Bearings must be adjusting according to operating instructions.
9. Damage tooth system of the saw band	- In gripping the lifting cylinder is backlash.	
	- Squeezed pin upper or downer holder of the lifting cylinder.	Exchange complete upper or downer holder of lifting cylinder.
10. The saw is cut downing.	- Geometry of hardmetal guiding cubes is wrong adjusted.	Hardmetal guiding cubes must be adjusted.
	- Bearings of guiding cubes are used.	Bearings of guiding cubes must be replaced.
11. Cleansing of the saw band is not functional.	- Elastic wheel of the brush drive is worn-down.	Elastic wheel of the brush must be changed.
	- Knurling of the driving wheel is worn-down.	Driving wheel must be changed.
	- The shaft of the brush drive is rusted.	The shaft of the brush must be cleaned and oiled.
	- The brush position and the brush cover is adjusted wrong – with the brush cannot be turned.	The brush cover must be posed, in order to the brush can be turned.
12. The saw arm periodically rise and fall during the cut; this cause short lifetime of the saw band.	- Backslash in driving wheel lodgement on the shaft.	Change the driving shaft for a long one, new bearings, distance ring, new driving wheel, spring, two covers on the forehead of the shaft + screws.
	- Worn channel for spring.	

5.2. Electric and hydraulic problems

Problem	Possible causes	Repair
1. Machine is not possible start.	- In socket is not voltage	Line voltage must be checked.
	- Transfer relay is closed (thermal protector)	Each FA relay must be checked.
	- Limit switch of saw band stretching, cover of frame or cover of saw band is not started.	Check of saw band stretching and covers closing.
2. When cut is finished, the frame is not raising.	- Bottom limit switch is adjusted wrong.	Bottom limit switch must be adjusted according to chapter ADJUSTING.
	- In hydraulic (pneumatic) ring is error. HYTOS (BOSCH) is not acting to frame uplift.	Function of magnetic valve must be checked, valve must be closed, voltage of clamps and inductor must be checked.
3. Electric motor and pump are without voltage. Between contactor and thermal protector is not voltage.	- Wrong contactor.	Replace contactor of engine.
4. The indicator of speed	- Sensor of speed is not adjusted.	Sensor of speed must be adjusted.

Problem	Possible causes	Repair
saw band is not functional.	- Defective display	The display must be changed.
	- Wrong sensor – diode of indicator speed is not light.	Sensor must be changed and adjusted.
5. Protector is switched off from engine hydraulic aggregate MA3 sometimes.	- Into hydraulic system is high working pressure.	Service engineer must reduce the pressure in hydraulic system.
6. The hydraulic aggregate cannot be started	Auxiliary contact on thermo-relay FA1 is defective.	Replace the defective contact on motor starter FA1.
7. Hydraulic aggregate is switched on but the saw arm or the main vice is not functional	- Wrong connection of electrical supply. The electrical phases are connected conversely.	The phases must be switched. Only service engineer can do this.
8. Cooling is not active	Lack of cooling agent.	Fill the tank with cooling agent.
	- Thermal relay is defective	Change the thermal relay
	- Input hosepipe is broken or obstructed.	Check the cooling circuit and perhaps cleanse cooling system.
	- Cooling pump protection is defective	Check the protection of cooling pump if need change it.
	- Cooling pump is defective.	Replace the cooling pump.

6. Schémata

6.1. Elektrické schema - standard / Elektroschema – standard /Wiring diagrams –standard

6.1.1. 3×400 V+P, 50 Hz

Obsah / Table of contents / Inhalt

Strana Page Seite	Název strany Page name Seitenname	Datum Date Datum
/1	Úvodní strana / Start page / Startseite	12.05.21
/2	Obsah / Table of contents / Inhaltsverzeichnis	12.05.2021
/3	Kusovník artiklů / Parts list / Artikelstückliste	05.05.21
/3.a	Kusovník artiklů / Parts list / Artikelstückliste	12.05.21
/3.b	Kusovník artiklů / Parts list / Artikelstückliste	12.05.21
/3.c	Kusovník artiklů / Parts list / Artikelstückliste	12.05.21
/3.d	Kusovník artiklů / Parts list / Artikelstückliste	12.05.21
/3.e	Kusovník artiklů / Parts list / Artikelstückliste	12.05.21
/3.f	Kusovník artiklů / Parts list / Artikelstückliste	12.05.21
/3.g	Kusovník artiklů / Parts list / Artikelstückliste	12.05.21
/4	I/O řídící systém / I/O Control station / I/O Steuerung	11.04.16
/5	Rozmístění prvků v rozvaděči R1 / Placement of elements in enclosure R1 / Platzierung der Elemente im Schaltschrank R1	12.05.21
/6	Ovládací panely / Control panely / Bedienpulten	29.03.21
/7	Silová část / Power part / Feld partie	12.05.21
/8	Silová část M1, M1 / Power part M1, M2 / Feld partie M1, M2	12.05.21
/9	Silová část M3, M4 / Power part M3, M4 / Feld partie M3, M4	12.05.21
/10	Deska zdroje / Power board / Netzgerat-Platte	28.01.21
/11	Stykače motorů / Motor contactor / Motor-Schutzschalter	05.05.21
/12	Hydraulické ventily / Hydraulic valve / Hydroventil	28.01.21
/13	Hydraulické ventily / Hydraulic valve / Hydroventil	28.01.21
/14	Vstupy / Inputs / Eingänge	28.01.21
/15	Tlačítka ovládací panel / Button control panel / Taste Bedienpult	29.03.21
/16	Bezpečnostní okruh / Safety circle / Sicherheitsbereich	01.03.21
/16.a	Bezpečnostní závory / Safety barriers / Sicherheitsbarrieren	01.03.21
/17	Řídící systém / Control system / Steuersystem	01.03.21
/18	Snímač výšky ramene / Arm height sensor / Höhensensor Arm	28.01.21
/19	Příslušenství / Accessories / Zubehör	28.01.21
/20	SyncFree / SyncFree / SyncFree	01.03.21

1

BOMAR, s.r.o. Těžební 1236/1 CZ 627 00, Brno	Stroj/Machine/Maschine: Individual 820.640 (D)GH	Název stránky/Name page/Name seiten: Obsah / Table of contents / Inhaltsverzeichnis	Číslo dok./Doc.No/Anzahl der Dokumente.: ES-101.438-B1/B2-V7.1 Napájení/Power supply/Einspeinsung: 3x400V+PE, 50Hz Zpracoval/Processed /Hat verarbeitet: Datum/Date/Datum: 12.05.2021	List/Page/Seite: 2 Listů/Pages/Seiten: 28

Kusovník artiklů / Parts list / Stückliste

Označení přístroje Device identification Geräteidentifikation	Typ přístroje Device description Gerätebeschreibung	Objednací číslo Type number Typennummer	Výrobce Manufacturer Hersteller	Skladové číslo Part number Lagernummer	Množství Quantity Menge	Umístění Location Stelle
-ZD1	Napájecí zdroj - 15VAC/24VDC; 20VAC/28VDC Power supply unit - 15VAC/24VDC; 20VAC/28VDC Netzteil - 15VAC/24VDC; 20VAC/28VDC	ZDR-03	Bomar	265.915	1	/10.3
-BM1	Bezpečnostní relé 24VDC, 3NO/1NC Safety relay 24VDC, 3NO/1NC Sicherheitsrelais 24VDC, 3NO/1NC	ABB.2TLA010040R0000	ABB	91.051.076	1	/16.5
-CU1	Klávesnice - fóliová Touch-sensitive keyboard Folientastatur	31.R230-207	AKI ELECTRONIC, spol.s.r.o.	31.R230-207	1	/17.0
-FA1	Motorový spouštěč - 0.4A Motor starter - 0.4A Motorstarter - 0.4A	MS116-0,4	ABB	91.045.017	1	/8.2
-FA2	Motorový spouštěč - 6.3A Motor starter - 6.3A Motorstarter - 6.3A	MS116-6,3	ABB	91.045.023	1	/8.6
-SN10.4	Indukční snímač vzdálenosti Inductive proximity sensor Induktive Näherungssensor	BAW R06AC-UAF20B-EP03	BALLUFF	91.172.016	1	/19.6
-A10.4	Odchylka pásu Band deviation Bandabweichung	BDM2	BOMAR s.r.o.	266.254	1	/19.2
-FU1	Pojistka trubičková - 500mA/250V, pomalá, 5x20 Tube fuse - 500mA/250V, slow, 5x20 Rohrsicherung - 500 mA / 250 V, langsam, 5x20	T500mA/250V	ESKA	91.230.011	1	/10.5
-FU4	Pojistka trubičková - 6,3A/250V, pomalá, 5x20 Tube fuse - 6,3A/250V, slow, 5x20 Rohrsicherung - T6,3A / 250V, langsam, 5x20	T6,3A/250V	ESKA	91.230.002	1	/10.5
-RP1	Potenciometr 4k7 Potenciometer 4k7 Potentiometer 4k7	TP195 4k7/N20A	Elektronické součástky CZ, a.s	91.283.015	1	/9.8
-RP1	Hlavice potenciometru - 24mm Head of potentiometer 24mm Leiter Potentiometer 24mm	S8877 BLK	GES-ELECTRONICS, a.s.	91.060.063	1	/9.8
-HV1A	Dioda 800V 3A Diode 800V 3A Diode 800V 3A	BY399 DO201	GM-electronics	91.280.009	6	/12.0

The manufacturer reserves right to use an equivalent replacement device.

2

Kusovník artiklů / Parts list / Stückliste

Označení přístroje Device identification Geräteidentifikation	Typ přístroje Device description Gerätebeschreibung	Objednací číslo Type number Typennummer	Výrobce Manufacturer Hersteller	Skladové číslo Part number Lagernummer	Množství Quantity Menge	Umístění Location Stelle
-RCF1	Filtr RFC vývodový Efferent RFC filter Ableitenden RFC Filter	FBOPR1624	Ing. Miroslav Vlček	91.041.015	1	/8.2
-RCF2	Filtr RFC vývodový Efferent RFC filter Ableitenden RFC Filter	FBOPR1624	Ing. Miroslav Vlček	91.041.015	1	/8.5
-RCF3	Filtr RFC vývodový Efferent RFC filter Ableitenden RFC Filter	FBOPR1624	Ing. Miroslav Vlček	91.041.015	1	/9.1
-RCF11	Filtr RFC vývodový Efferent RFC filter Ableitenden RFC Filter	FBOPR1624	Ing. Miroslav Vlček	91.041.015	1	/7.5
-RCF12	Filtr RFC vývodový Efferent RFC filter Ableitenden RFC Filter	FBOPR1624	Ing. Miroslav Vlček	91.041.015	1	/7.7
-+R10.4	Kleštinová vývodka Cable gland Kabelverschraubung	AG-1545.12.06	Schmachtl CZ s.r.o.	91.070.010	2	/19.6
-+R10.4	Matice černá Nut black Nuss schwarz	AG8245.12	Schmachtl CZ s.r.o.	91.072.010	2	/19.6
-FA1	Pomocné kontakty - 1xNO+1xNC Auxiliary contacts - 1xNO+1xNC Hilfskontakte - 1xNO+1xNC	HKF1-11	ABB	91.046.002	1	/8.2
-FA2	Pomocné kontakty - 1xNO+1xNC Auxiliary contacts - 1xNO+1xNC Hilfskontakte - 1xNO+1xNC	HKF1-11	ABB	91.046.002	1	/8.6
-FA3	Motorový spouštěč - 1A Motor starter - 1A Motorstarter - 1A	MS116-1,00	ABB	91.045.019	1	/9.1
-FA3	Pomocné kontakty - 1xNO+1xNC Auxiliary contacts - 1xNO+1xNC Hilfskontakte - 1xNO+1xNC	HKF1-11	ABB	91.046.002	1	/9.1
-FU1	Svorka pojistková Fuse terminal Sicherungsklemme	WK4/THSi5U	WIELAND	91.251.102	1	/10.5

The manufacturer reserves right to use an equivalent replacement device.

3

Kusovník artiklů / Parts list / Stückliste

Označení přístroje Device identification Geräteidentifikation	Typ přístroje Device description Gerätebeschreibung	Objednací číslo Type number Typennummer	Výrobce Manufacturer Hersteller	Skladové číslo Part number Lagernummer	Množství Quantity Menge	Umístění Location Stelle
-FU2	Svorka pojistková Fuse terminal Sicherungsklemme	WK4/THSi5U	WIELAND	91.251.102	1	/10.5
-FU2	Pojistka trubičková - 800mA/250V, pomalá, 5x20 Tube fuse - 800A/250V, slow, 5x20 Rohrsicherung - 800A / 250V, langsam, 5x20	T800mA/250V	ESKA	91.230.010	1	/10.5
-FU3	Svorka pojistková Fuse terminal Sicherungsklemme	WK4/THSi5U	WIELAND	91.251.102	1	/10.5
-FU3	Pojistka trubičková - 1A/250V, pomalá, 5x20 Tube fuse - 1A/250V, slow, 5x20 Rohrsicherung - 1A / 250V, langsam, 5x20	T1A/250V	ESKA	91.230.031	1	/10.5
-FU4	Svorka pojistková Fuse terminal Sicherungsklemme	WK4/THSi5U	WIELAND	91.251.102	1	/10.5
-H10.4	Maják - základna Lighthouse - Base Leuchtturm - Basis	SL7-CB-100	EATON	91.063.058	1	/19.3
-H10.4	Maják - žlutý Lighthouse - yellow Leuchtturm - gelb	SL7-L-Y	EATON	91.063.059	1	/19.3
-H10.4	Žárovka 24V Lamp 24V Lampe 24V	SL7-L24	EATON	91.063.061	1	/19.3
-HL1	Signálka LED zelená na adaptér Green light for Eaton adapter Grünes Licht für Eaton-Adapter	M22-LED-G	EATON	91.061.023	1	/13.8
-KM1	Ministykač - 4kW/400V, 3P Mini contactor - 4kW/400V, 3P Mini-Schütz - 4kW/400V, 3P	B6S-30-10-1.7-71	ABB	91.040.048	1	/11.1
-KM2	Ministykač - 4kW/400V, 3P Mini contactor - 4kW/400V, 3P Mini-Schütz - 4kW/400V, 3P	B6S-30-10-1.7-71	ABB	91.040.048	1	/11.3
-KM3	Ministykač - 4kW/400V, 3P Mini contactor - 4kW/400V, 3P Mini-Schütz - 4kW/400V, 3P	B6S-30-10-1.7-71	ABB	91.040.048	1	/11.5

The manufacturer reserves right to use an equivalent replacement device.

3.a

BOMAR, s.r.o. Těžební 1236/1 CZ 627 00, Brno	Stroj/Machine/Maschine: Individual 820.640 (D)GH	Název stránky/Name page/Name seiten: Kusovník artiklů / Parts list / Artikelstückliste	Číslo dok./Doc.No/Anzahl der Dokumente.: ES-101.438-B1/B2-V7.1 Napájení/Power supply/Einspeinsung: 3x400V+PE, 50Hz Zpracoval/Processed /Hat verarbeitet: Datum/Date/Datum: 12.05.2021	List/Page/Seite: 3.b Listů/Pages/Seiten: 28

Kusovník artiklů / Parts list / Stückliste

Označení přístroje Device identification Geräteidentifikation	Typ přístroje Device description Gerätebeschreibung	Objednací číslo Type number Typennummer	Výrobce Manufacturer Hersteller	Skladové číslo Part number Lagernummer	Množství Quantity Menge	Umístění Location Stelle
-KM11	Stýkač 7,5kW/400V Contactor 7,5kW/400V Schütz 7,5kW/400V	AF16-30-10-11	ABB	91.040.056	1	/16.7
-KM11	Pomocný kontakt - 1xNC Auxiliary contact - 1xNC Hilfskontakt - 1 xNC	CA4-01	ABB	91.041.043	1	/16.7
-KM12	Stýkač 7,5kW/400V Contactor 7,5kW/400V Schütz 7,5kW/400V	AF16-30-10-11	ABB	91.040.056	1	/16.8
-KM12	Pomocný kontakt - 1xNC Auxiliary contact - 1xNC Hilfskontakt - 1 xNC	CA4-01	ABB	91.041.043	1	/16.8
-M5	Ventilátor 24VDC, 5W Fan 24VDC, 5W Fan 24VDC, 5,W	EEC0252B1-A99	SUNON	91.015.139	1	/11.7
-PA1	Pojistkový odpínač pro válcové vložky - 3P Switch fuse for the cylinder inserts - 3P Schalter Sicherung für den Zylindereinsätze - 3P	E 93/32	ABB	91.241.014	1	/9.4
-PA2	Pojistkový odpojovač E-90 - 2P Fuse disconnector E-90 - 2P Sicherungstrenner E90 - 2P	E 92/32	ABB	91.241.013	1	/10.1
-QS1	3 pólový odpínač, 25A Disconnector - 3P, 25A Trennschalter - 3P, 25A	OT25FT3	ABB	91.170.016	1	/7.0
-QS1	Rukojeť odpínače - černá Handle switch - black Griffschalter - schwarz	OHBS2RJ	ABB	91.180.015	1	/7.0
-QS1	Kryt svorek Terminal shroud Klemmenabdeckung	OTS40T3	ABB	91.170.017	1	/7.0
-RE1	Patice pro relé Relay socket Relaissockel	CR-PSS	ABB	91.051.048	1	/12.7
-RE1	Paticové relé CR-P Plug-in relay CR-P Stecken Sie in Relais CR-P	CR-P024DC2	ABB	91.051.049	1	/12.7

The manufacturer reserves right to use an equivalent replacement device.

3.b

Kusovník artiklů / Parts list / Stückliste

Označení přístroje Device identification Geräteidentifikation	Typ přístroje Device description Gerätebeschreibung	Objednací číslo Type number Typennummer	Výrobce Manufacturer Hersteller	Skladové číslo Part number Lagernummer	Množství Quantity Menge	Umístění Location Stelle
-RP1	Svorka rychloupínací Fastconnect clamp Fast Connect Klemm	WAGO 224-112	WAGO	91.250.009	3	/9.8
-SA2	Hlavice tlačítka - černá Head button - black Kopftaste - schwarz	M22-D-S	EATON	91.060.035	1	/19.1
-SA2	Upevňovací adaptér + 1NO Attaching adapter + 1NO Montageadapter + 1NO	M22-AK10	EATON	91.061.021	1	/19.1
-SB1	Hlavice prosvětleného tlačítka zelená Green transparent switch Grün transparent Schalter	M22-DL-G	EATON	91.060.031	1	/15.1
-SB1	Upevňovací adaptér + 1NO Attaching adapter + 1NO Montageadapter + 1NO	M22-AK10	EATON	91.061.021	1	/15.1
-SB2	Upevňovací adaptér + 1NO Attaching adapter + 1NO Montageadapter + 1NO	M22-AK10	EATON	91.061.021	1	/15.2
-SB2	Hlavice tlačítka - černá Head button - black Kopftaste - schwarz	M22-D-S	EATON	91.060.035	1	/15.2
-SB3	Hlavice 3 polohového přepínače Head of 3 position switch Leiter der 3-Positionsschalter	M22-WRK3	EATON	91.060.051	1	/15.3
-SB3	Kontaktní blok - 1NO; na panel Contact block - 1NO; on the panel Kontaktblock - 1NO; auf dem panel	M22-K10	EATON	91.061.022	1	/15.3
-SB3	Upevňovací adaptér + 1NO Attaching adapter + 1NO Montageadapter + 1NO	M22-AK10	EATON	91.061.021	1	/15.3
-SB8	Kontaktní blok - 1NO; na panel Contact block - 1NO; on the panel Kontaktblock - 1NO; auf dem panel	M22-K10	EATON	91.061.022	1	/16.a.3
-SB501	Total stop - hlavice + 2xNC Emergency-stop - button + 2xNC Not-Aus-Pilz - Taster + 2xNC	YW1B-V4E02R	IDEC	91.060.084	1	/16.4

The manufacturer reserves right to use an equivalent replacement device.

3.c

Kusovník artiklů / Parts list / Stückliste

Označení přístroje Device identification Geräteidentifikation	Typ přístroje Device description Gerätebeschreibung	Objednací číslo Type number Typennummer	Výrobce Manufacturer Hersteller	Skladové číslo Part number Lagernummer	Množství Quantity Menge	Umístění Location Stelle
-SB501	Kontakt - 1x NO Contact - 1x NO Kontakt - 1x NO	YW-E10	IDEC	91.061.044	1	/16.4
-TR1	Toroidal transformer - 0-230-400V/20V/15V, 150VA Toroidal transformer - 0-230-400V/20V/15V, 150VA Ringkerntransformator - 0-230V-400V/20V/15V, 150VA	400V/230V/20V/15V 6A/2A 150VA	KARBAN s.r.o.	91.080.026	1	/10.2
-SQ21	Bezpečnostní koncový spínač - 2xNC Safety Limit Switch - 2x NC Sicherheitsendschalter - 2x NC	QKS8	KEDU	91.173.012	1	/16.4
-SQ22	Bezpečnostní koncový spínač - 2xNC Safety Limit Switch - 2x NC Sicherheitsendschalter - 2x NC	QKS8	KEDU	91.173.012	1	/16.2
-PA1	Pojistka válcová - 20A, 10x38, rychlá Tube fuse - 20A, 10x38, fast Rohrsicherung - 20A, 10x38, schnell	PV10 20A gG	OEZ	91.230.038	3	/9.4
-PA2	Pojistka válcová - 2A, 10x38, rychlá Tube fuse - 2A, 10x38, fast Rohrsicherung - 2A, 10x38, schnell	PV10 2A gG	OEZ	91.230.034	2	/10.1
-SQ3	Koncový spínač - 1NC+1NO, M20, pomalý Limit switch - 1NC+1NO, M20, slow Endschalter -1NC+1NO, M20, langsam	D4N-4A32	OMRON	91.173.010	1	/14.5
-SQ4	Koncový spínač - 1NC+1NO, M20, pomalý Limit switch - 1NC+1NO, M20, slow Endschalter -1NC+1NO, M20, langsam	D4N-4A32	OMRON	91.173.010	1	/14.6
-SQ1	Koncový spínač - 1NO + 1NC, kladka, pomalá akce Limit switch - 1NO + 1NC, pulley, slow action Endschalter - 1NO + 1NC, rolle, langsame Einwirkung	FR 605-M2	PIZZATO	91.173.009	1	/14.3
-SQ2	Koncový spínač - 1NO + 1NC, kladka, pomalá akce Limit switch - 1NO + 1NC, pulley, slow action Endschalter - 1NO + 1NC, rolle, langsame Einwirkung	FR 605-M2	PIZZATO	91.173.009	1	/14.4
-FM1	Frekvenční měnič - 5.5kW, 3x400VAC Frequency converter - 5.5kW, 3x400VAC Frequenzumrichter - 5.5kW, 3x400VAC	VFD13AME43AFNAA	DELTA ELECTRONICS, INC.	91.012.192	1	/9.4
-BM10.10	Bezpečnostní spínací přístroj Safety switch Sicherheitsschalter	SICK.1085343	SICK	91.051.071	1	/16.a.6

The manufacturer reserves right to use an equivalent replacement device.

3.d

Kusovník artiklů / Parts list / Stückliste

Označení přístroje Device identification Geräteidentifikation	Typ přístroje Device description Gerätebeschreibung	Objednací číslo Type number Typennummer	Výrobce Manufacturer Hersteller	Skladové číslo Part number Lagernummer	Množství Quantity Menge	Umístění Location Stelle
-SZ10.10A	Vícepaprsková bezpečnostní světelná závora - přijímač Safety multi-beam light curtain - receiver Sicherheits-Mehrstrahl -Lichtvorhang - Empfänger	M40E-025030RR0	SICK	91.401.009	1	/16.a.3
-SZ10.10A	Kabel s přímým konektorem M12, 8pin Cable with straight connector M12, 8pin Kabel mit geradem Stecker M12, 8pin	DOL-127SG15ME25KM0	SICK	91.142.015	1	/16.a.3
-SZ10.10B	Vícepaprsková bezpečnostní světelná závora - vysílač Safety multi-beam light curtain - transmitter Sicherheits-Mehrstrahl -Lichtvorhang- Sender	M40S-025010AR0	SICK	91.401.008	1	/16.a.0
-SZ10.10B	Kabel s přímým konektorem M12, 8pin Cable with straight connector M12, 8pin Kabel mit geradem Stecker M12, 8pin	DOL-127SG15ME25KM0	SICK	91.142.015	1	/16.a.0
-+R1.2	PS 41x89x74mm - šedá PS 41x89x74mm - grey PS 41x89x74mm - grau	Z54	SOS Electronic, spol. s r.o.	91.190.036	1	/18.4
-+R10.4	PS 41x89x74mm - šedá PS 41x89x74mm - grey PS 41x89x74mm - grau	Z54	SOS Electronic, spol. s r.o.	91.190.036	1	/19.6
-ZD1	Konektor Connector Stecker	SHM02-5,08	EUROCLAMP	91.144.032	4	/10.3
-SB8	Hlavice prosvětleného tlačítka žlutá The button head backlit yellow Der Knopf Kopf von hinten beleuchtet gelb	ZB5AW35	TELEMECANIQUE	91.060.023	1	/16.6
-CU1	Řídící obvod Control circuit Die Steuerschaltung	PRO-5.X	Bomar	91.995.221	1	/17.0
-+R1.2	Svorka Clamp Klemmen	WAGO.260-301	WAGO	91.250.008	7	/18.4
-+R1.2	Koncová bočnice End side Endseite	WAGO.260-361	WAGO	91.252.003	1	/18.4
-+R10.4	Svorka Clamp Klemmen	WAGO.260-301	WAGO	91.250.008	1	/19.6

The manufacturer reserves right to use an equivalent replacement device.

3.e

Kusovník artiklů / Parts list / Stückliste

Označení přístroje Device identification Geräteidentifikation	Typ přístroje Device description Gerätebeschreibung	Objednací číslo Type number Typennummer	Výrobce Manufacturer Hersteller	Skladové číslo Part number Lagernummer	Množství Quantity Menge	Umístění Location Stelle
-+R10.4	Koncová bočnice End side Endseite	WAGO.260-361	WAGO	91.252.003	1	/19.6

The manufacturer reserves right to use an equivalent replacement device.

3.f

Individual (D)GH

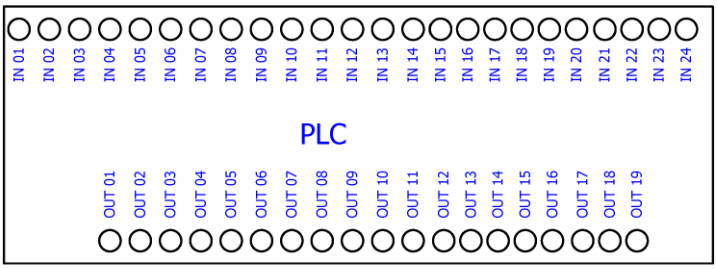

HW	
FW	

Pohled ze spodu/From under view/Blick nach

I/O	CZE	ENG	DE
IN 01	Svěrák upnut	Vice is clamped	Schraubstock ist gespannt
IN 02	Rameno dole	Arm is down	Rahmen ist unten
IN 03	Rameno nahoře	Arm is up	Rahmen ist oben
IN 04	Napnutí pásu	Blade tension	Bandspannung
IN 05	Motory OK	Motors OK	Motoren OK
IN 06	Bezpečnostní okruh uzavřen	Safety circle shut down	Sicherheitsschaltung gesperrt
IN 07	Tlačítko TOTAL STOP	Button TOTAL STOP	Taste TOTAL STOP
IN 08	Tlačítko START	Button START	Taste START
IN 09	Tlačítko STOP	Button STOP	Taste STOP
IN 10	MANUAL	MANUAL	MANUAL
IN 11	CYKLUS	CYCLE	ZYKLUS
IN 12	NC	NC	NC
IN 13	NC	NC	NC
IN 14	NC	NC	NC
IN 15	NC	NC	NC
IN 16	NC	NC	NC
IN 17	NC	NC	NC
IN 18	NC	NC	NC
IN 19	Tlačítko napnout pás	Button band tension	Taste band spannen
IN 20	Tlačítko povolit pás	Button band release	Taste band lösen
IN 21	Tlačítko rameno nahoru	Button arm up	Taste Rahmen nach oben
IN 22	NC	NC	NC
IN 23	Přítlak upnut	Upper vice is clamped	Ober Schraubstock ist gespannt
IN 24	NC	NC	NC
OUT 01+ OUT 01-	Start FM1	Start FM1	Start FM1
OUT 02+ OUT 02-	NC	NC	NC
OUT 03+ OUT 03-	NC	NC	NC
OUT 04	Motor chlazení	Coolant pump	Motor Kühlung
OUT 05	Čerpadlo hydrauliky	Hydraulic pump	Hydraulikpumpe
OUT 06	2.stupeň hydrauliky	Second level of hydraulic pump	Hydraulikpumpe 2.Stufe
OUT 07	Svěrák upnout	Vice clamp	Schraubstock spannen
OUT 08	Svěrák povolit	Release vice	Schraubstock lösen
OUT 09	Svěrák doleva	Vice to the left	Schraubstock nach links
OUT 10	Svěrák doprava	Vice to the right	Schraubstock nach rechts
OUT 11	Rameno nahoru	Arm up	Rahmen nach oben
OUT 12	Rameno dolů	Arm down	Rahmen nach unten
OUT 13	Rameno rychle	Arm fast	Rahmen schnell
OUT 14	Přítlak upnout	Upper vice clamp	Ober Schraubstock spannen
OUT 15	Přítlak povolit	Release upper vice	Ober Schraubstock lösen
OUT 16	Napnout pás	Sawblade tension	Spannen des Sägebandes
OUT 17	Uvolnit pás	Sawblade leave	Entspannen des Sägebandes
OUT 18	Mikronizer	Microniser	Mikronizer
OUT 19	Kontrolka start	Indicator start	Kontrollicht start

BOMAR, s.r.o.
Těžební 1236/1
CZ 627 00, Brno

Stroj/Machine/Maschine:
Individual 820.640 (D)GH

Název stránky/Name page/Name seiten:
I/O řídící systém / I/O Control station / I/O Steuerung

Číslo dok./Doc.No/Anzahl der Dokumente: ES-101.438-B1/B2-V7.1
Napájení/Power supply/Einspeisung: 3x400V+PE, 50Hz
Zpracoval/Processed /hat verarbeitet:
Datum/Date/Datum: 11.04.2016

List/Page/Seite: 4
List(Page/Seiten: 28

3.9

Schémata
Schemas
Schematics

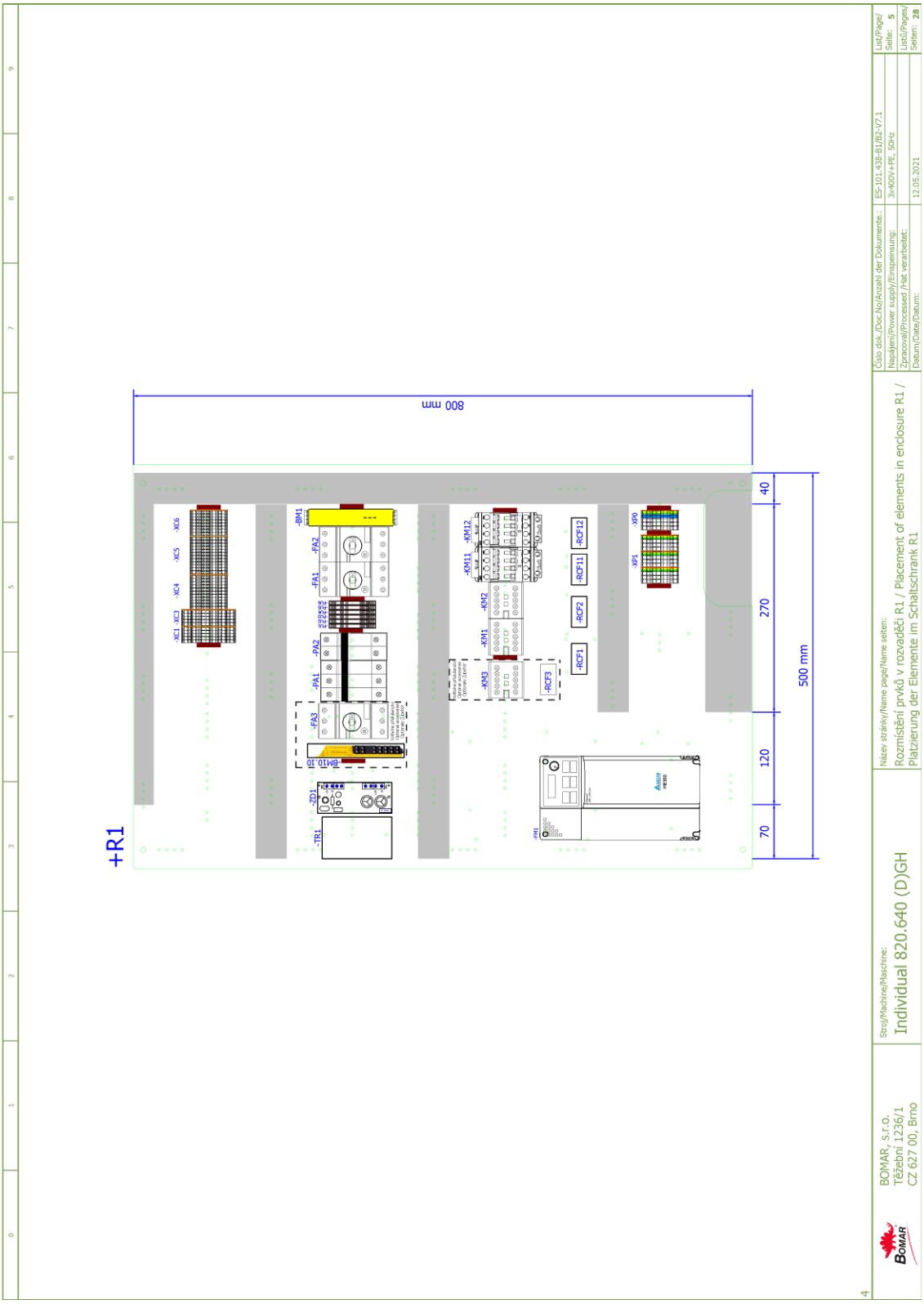
+R1
800 mm
500 mm
40
270
120
70
-XC1
-XC3
-XC4
-XC5
-XC6
-BM11
-FA2
-FA1
-PA2
-PA1
-FA3
-BM10.10
-ZD1
-TR1
-KM11
-KM12
-KM2
-KM1
-KM3
-RCF1
-RCF2
-RCF11
-RCF12
-RCF3
-XP0
-XP1
-PM1
Číslo dok./Doc.No/Anzahl der Dokumente:
ES-101.438-81/B2-V7.1
List/Page/Seite: 5
Listů/Pages/Seiten: 28
Napájení/Power supply/Einspeisung:
3x400V+PE, 50Hz
Zpracoval/Processed /Hat verarbeitet:
Datum/Date/Datum:
12.05.2021
Stroj/Machine/Maschine:
Individual 820.640 (D)GH
Název stránky/Name page/Name seiten:
Rozmístění prvků v rozváděči R1 / Placement of elements in enclosure R1 / Platzierung der Elemente im Schaltschrank R1
BOMAR, s.r.o.
Těžební 1236/1
CZ 627 00, Brno
4

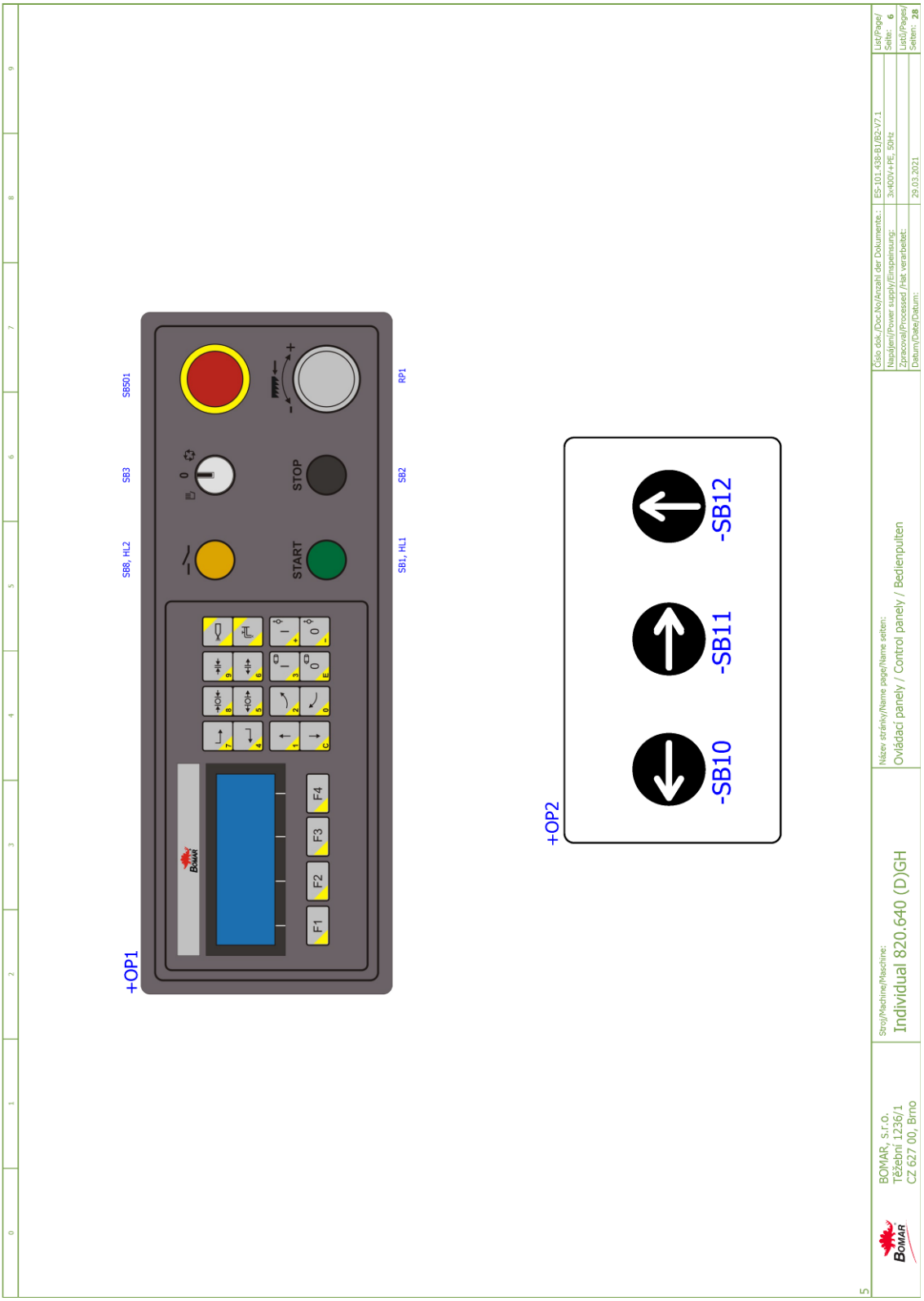
+OP1
SB501
SB3
SB8, HL2
RP1
SB2
SB1, HL1
STOP
START
F1
F2
F3
F4
+OP2
-SB10
-SB11
-SB12
BOMAR, s.r.o.
Těžební 1236/1
CZ 627 00, Brno
Stroj/Machine/Maschine:
Individual 820.640 (D)GH
Název stránky/Name page/Name seiten:
Ovládací panely / Control panely / Bedienpulten
Číslo dok./Doc.No/Anzahl der Dokumente.:
ES-101.438-B1/B2-V7.1
Napájení/Power supply/Einspeisung:
3x400V+PE, 50Hz
Zpracoval/Processed /Hat verarbeitet:
Datum/Date/Datum:
29.03.2021
List/Page/
Seite: 6
List/Pages/
Seiten: 28
5

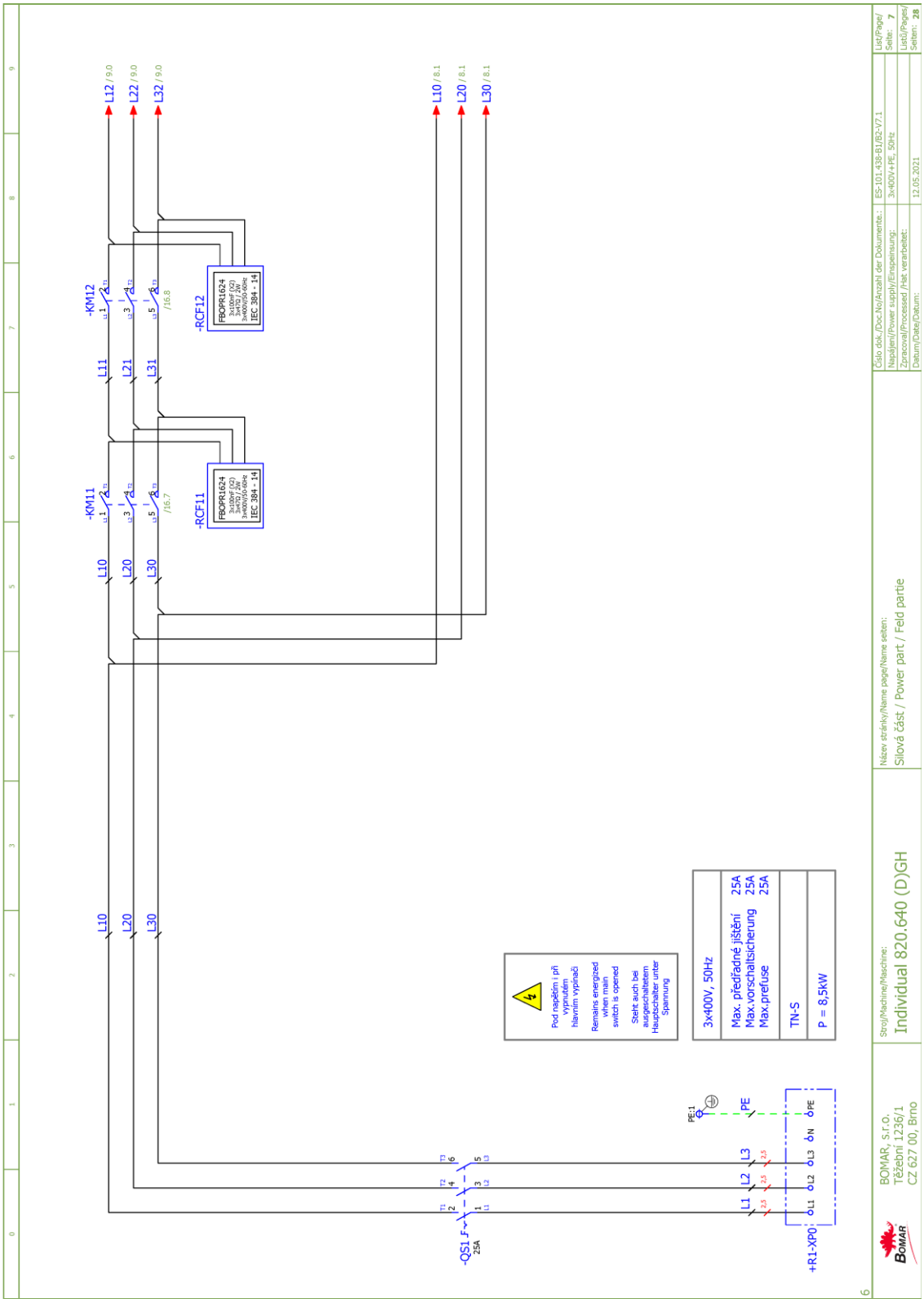
L12 / 9.0
L22 / 9.0
L32 / 9.0
L10 / 8.1
L20 / 8.1
L30 / 8.1
-KM12
-KM11
L11
L21
L31
L10
L20
L30
-RCF12
-RCF11
FBOPR1624
3x100nF (X2)
3x275V, 25A
3x400V/50-60Hz
IEC 384 - 14
/16.8
/16.7
Pod napětím i při vypnutém hlavním vypínači
Remains energized when main switch is opened
Steht auch bei ausgeschaltetem Hauptschalter unter Spannung
3x400V, 50Hz
Max. předřadné jištění 25A
Max.vorschaltsicherung 25A
Max.prefuse 25A
TN-S
P = 8,5kW
-QS1
25A
PE:1
PE
L1
L2
L3
+R1-XP0
BOMAR, s.r.o.
Těžební 1236/1
CZ 627 00, Brno
Stroj/Machine/Maschine:
Individual 820.640 (D)GH
Název stránky/Name page/Name seiten:
Silová část / Power part / Feld partie
Číslo dok./Doc.No/Anzahl der Dokumente:
ES-101.438-81/B2-V7.1
Napájení/Power supply/Einspeisung:
3x400V+PE, 50Hz
Zpracoval/Processed / Hat verarbeitet:
Datum/Date/Datum:
12.05.2021
List/Page/
Seite: 7
List(s)/Pages/
Seiten: 28

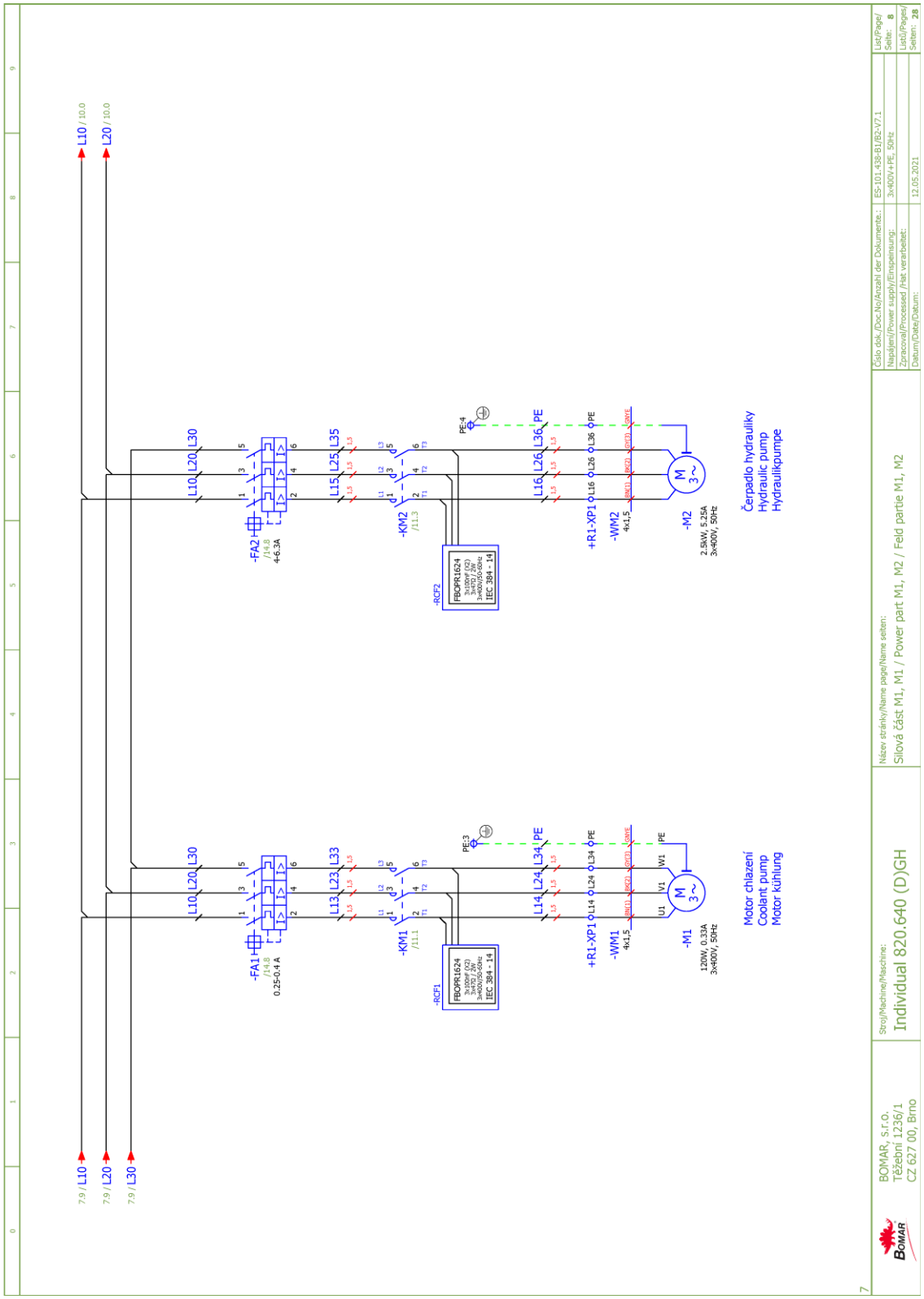
L10 / 10.0
L20 / 10.0
7.9 / L10
7.9 / L20
7.9 / L30
L10 L20 L30
-FA1
/14.8
0.25-0.4 A
L13 L23 L33
-KM1
/11.1
-RCF1
FBOPR1624
IEC 384 - 14
PE:3
L14 L24 L34 PE
+R1-XP1
-WM1
4x1,5
-M1
120W, 0.33A
3x400V, 50Hz
Motor chlazení
Coolant pump
Motor kühlung
-FA2
/14.8
4-6.3A
L15 L25 L35
-KM2
/11.5
-RCF2
PE:4
L16 L26 L36 PE
-M2
2.5kW, 5.25A
3x400V, 50Hz
Čerpadlo hydrauliky
Hydraulic pump
Hydraulikpumpe
Stroj/Machine/Maschine:
Individual 820.640 (D)GH
Název stránky/Name page/Name seiten:
Silová část M1, M1 / Power part M1, M2 / Feld partie M1, M2
BOMAR, s.r.o.
Těžební 1236/1
CZ 627 00, Brno
Číslo dok./Doc.No/Anzahl der Dokumente.:
ES-101.438-B1/B2-V7.1
Napájení/Power supply/Einspeisung:
3x400V+PE, 50Hz
Zpracoval/Processed /hat verarbeitet:
Datum/Date/Datum:
12.05.2021
List/Page/
Seite: 8
List/Pages/
Seiten: 28

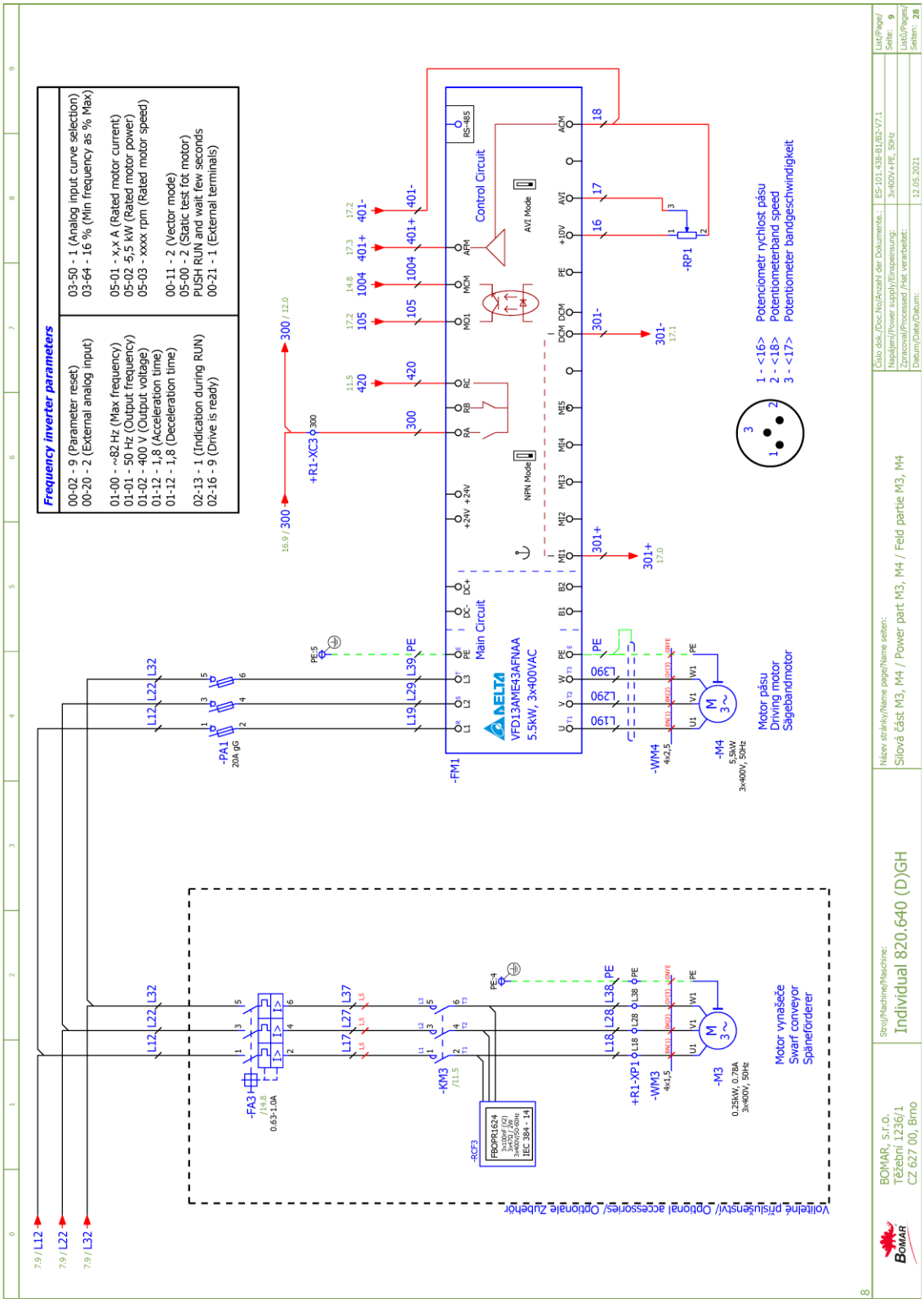
Frequency inverter parameters
00-02 - 9 (Parameter reset)
00-20 - 2 (External analog input)
03-50 - 1 (Analog input curve selection)
03-64 - 16 % (Min frequency as % Max)
01-00 - ~82 Hz (Max frequency)
01-01 - 50 Hz (Output frequency)
01-02 - 400 V (Output voltage)
01-12 - 1,8 (Acceleration time)
01-12 - 1,8 (Deceleration time)
05-01 - x,x A (Rated motor current)
05-02 5,5 kW (Rated motor power)
05-03 - xxxx rpm (Rated motor speed)
00-11 - 2 (Vector mode)
05-00 - 2 (Static test fór motor)
PUSH RUN and wait few seconds
02-13 - 1 (Indication during RUN)
02-16 - 9 (Drive is ready)
00-21 - 1 (External terminals)
-PA1
20A gG
-FA3
0,63-1,0A
-KM3
-RCF3
FBOPR1624
3x400V 50Hz
3x400V 50Hz
IEC 384 - 14
-FM1
DELTA
VFD13AME43AFNAA
5,5kW, 3x400VAC
Main Circuit
Control Circuit
NPN Mode
AVI Mode
RS-485
+R1-XC3
-WM4
4x2,5
-M4
5,5kW
3x400V, 50Hz
Motor pásu
Driving motor
Sägebandmotor
+R1-XP1
-WM3
4x1,5
-M3
0,25kW, 0,78A
3x400V, 50Hz
Motor vynašeče
Swarf conveyor
Späneförderer
-RP1
1 - <16> Potenciometr rychlost pásu
2 - <18> Potentiometerband speed
3 - <17> Potentiometer bandgeschwindigkeit
Volitelné příslušenství/ Optional accessories/ Optionale Zubehör
BOMAR, s.r.o.
Těžební 1236/1
CZ 627 00, Brno
Stroj/Machine/Maschine:
Individual 820.640 (D)GH
Název stránky/Name page/Name seiten:
Silová část M3, M4 / Power part M3, M4 / Feld partie M3, M4
ES-101.438-B1/B2-V7.1
3x400V+PE, 50Hz
12.05.2021
List/Page/Seite: 9
Listů/Pages/Seiten: 28

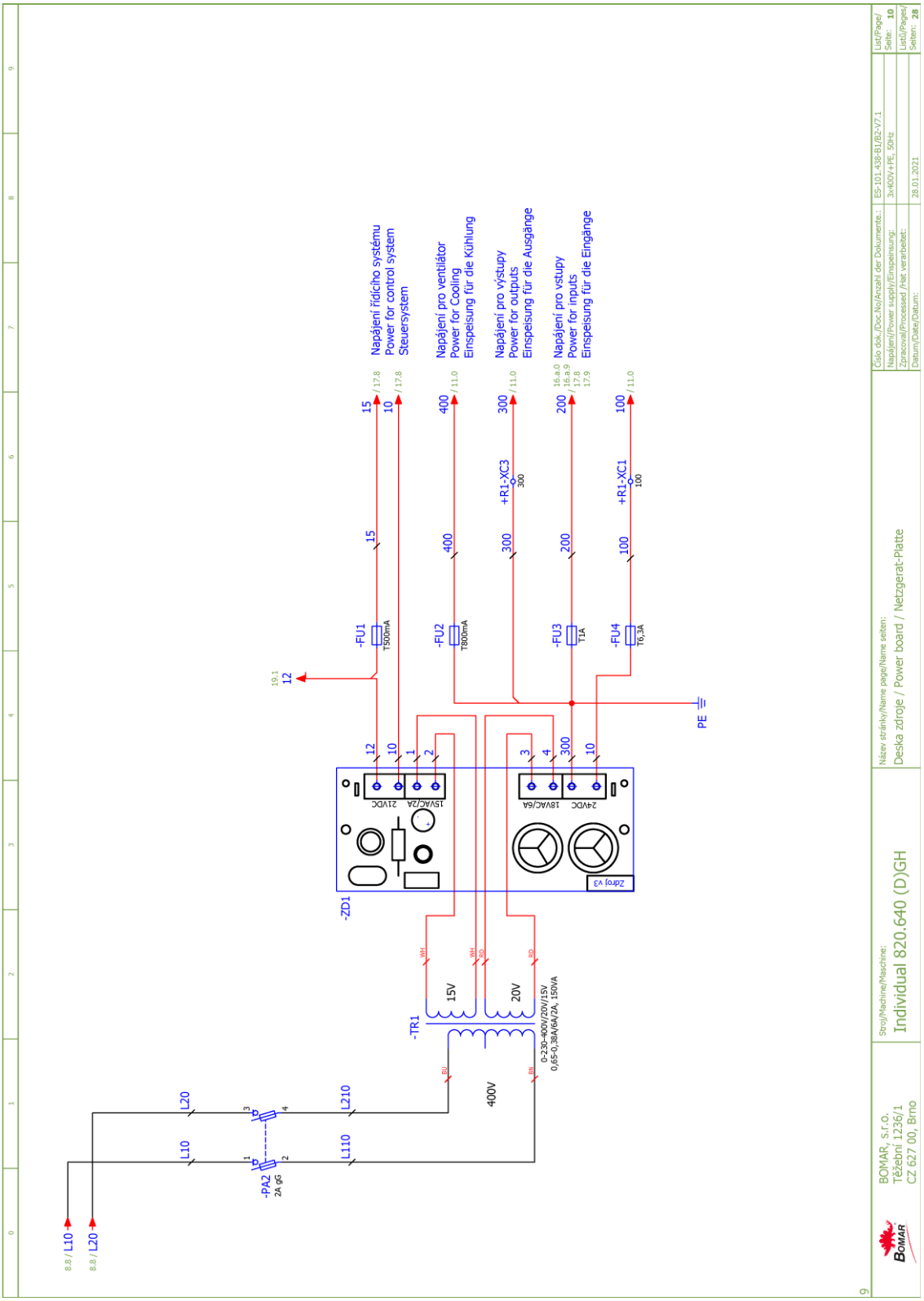
Napájení řídícího systému
Power for control system
Steuersystem
Napájení pro ventilátor
Power for Cooling
Einspeisung für die Kühlung
Napájení pro výstupy
Power for outputs
Einspeisung für die Ausgänge
Napájení pro vstupy
Power for inputs
Einspeisung für die Eingänge
-FU1 T500mA
-FU2 T800mA
-FU3 T1A
-FU4 T6,3A
+R1-XC3
+R1-XC1
-ZD1
15VAC/2A
21VDC
18VAC/6A
24VDC
Zdroj v3
-TR1
15V
20V
400V
0-230-400V/20V/15V
0,65-0,36A/6A/2A, 150VA
-PA2
2A gG
L10
L20
L110
L210
PE
Stroj/Machine/Maschine:
Individual 820.640 (D)GH
Název stránky/Name page/Name seiten:
Deska zdroje / Power board / Netzgerät-Platte
BOMAR, s.r.o.
Těžební 1236/1
CZ 627 00, Brno
Číslo dok./Doc.No/Anzahl der Dokumente.:
ES-101.438-B1/B2-V7.1
Napájení/Power supply/Einspeisung:
3x400V+PE, 50Hz
Zpracoval/Processed /hat verarbeitet:
Datum/Date/Datum:
28.01.2021
List/Page/Seite: 10
List/Pages/Seiten: 28

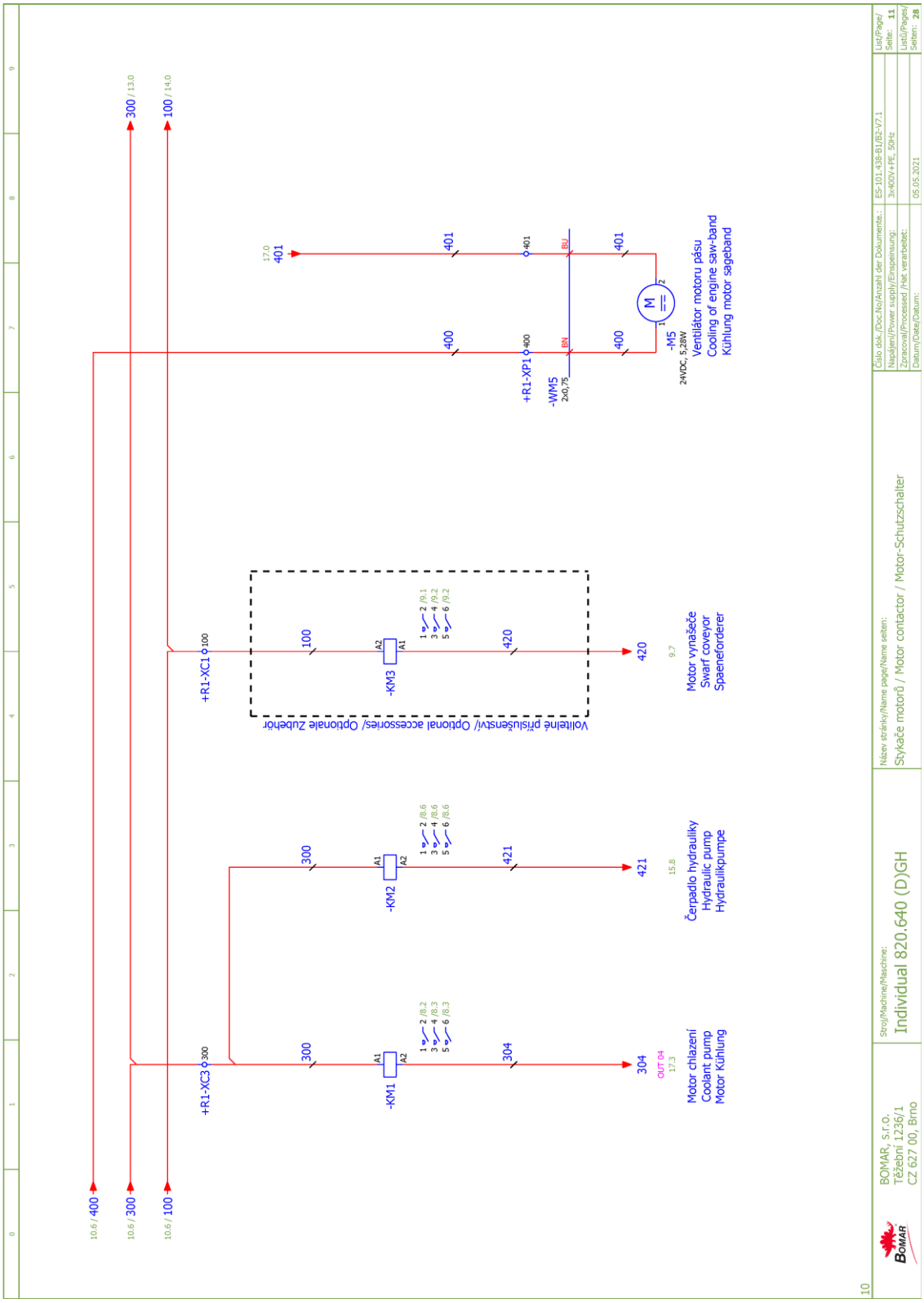
10.6 / 400
10.6 / 300
10.6 / 100
300 / 13.0
100 / 14.0
+R1-XC3
+R1-XC1
-KM1
-KM2
-KM3
Volitelné příslušenství/ Optional accessories/ Optionale Zubehör
Motor chlazení
Coolant pump
Motor Kühlung
Čerpadlo hydrauliky
Hydraulic pump
Hydraulikpumpe
Motor vynašeče
Swarf coveyor
Spaeneforderer
+R1-XP1
-WM5
2x0,75
-M5
24VDC, 5,28W
Ventilátor motoru pásu
Cooling of engine saw-band
Kühlung motor sageband
BOMAR, s.r.o.
Těžební 1236/1
CZ 627 00, Brno
Stroj/Machine/Maschine:
Individual 820.640 (D)GH
Název stránky/Name page/Name seiten:
Stykače motorů / Motor contactor / Motor-Schutzschalter
Číslo dok./Doc.No/Anzahl der Dokumente:
ES-101.438-81/B2-V7.1
Napájení/Power supply/Einspeisung:
3x400V+PE, 50Hz
Zpracoval/Processed /Hat verarbeitet:
Datum/Date/Datum:
05.05.2021
List/Page/
Seite: 11
Listů/Pages/
Seiten: 28

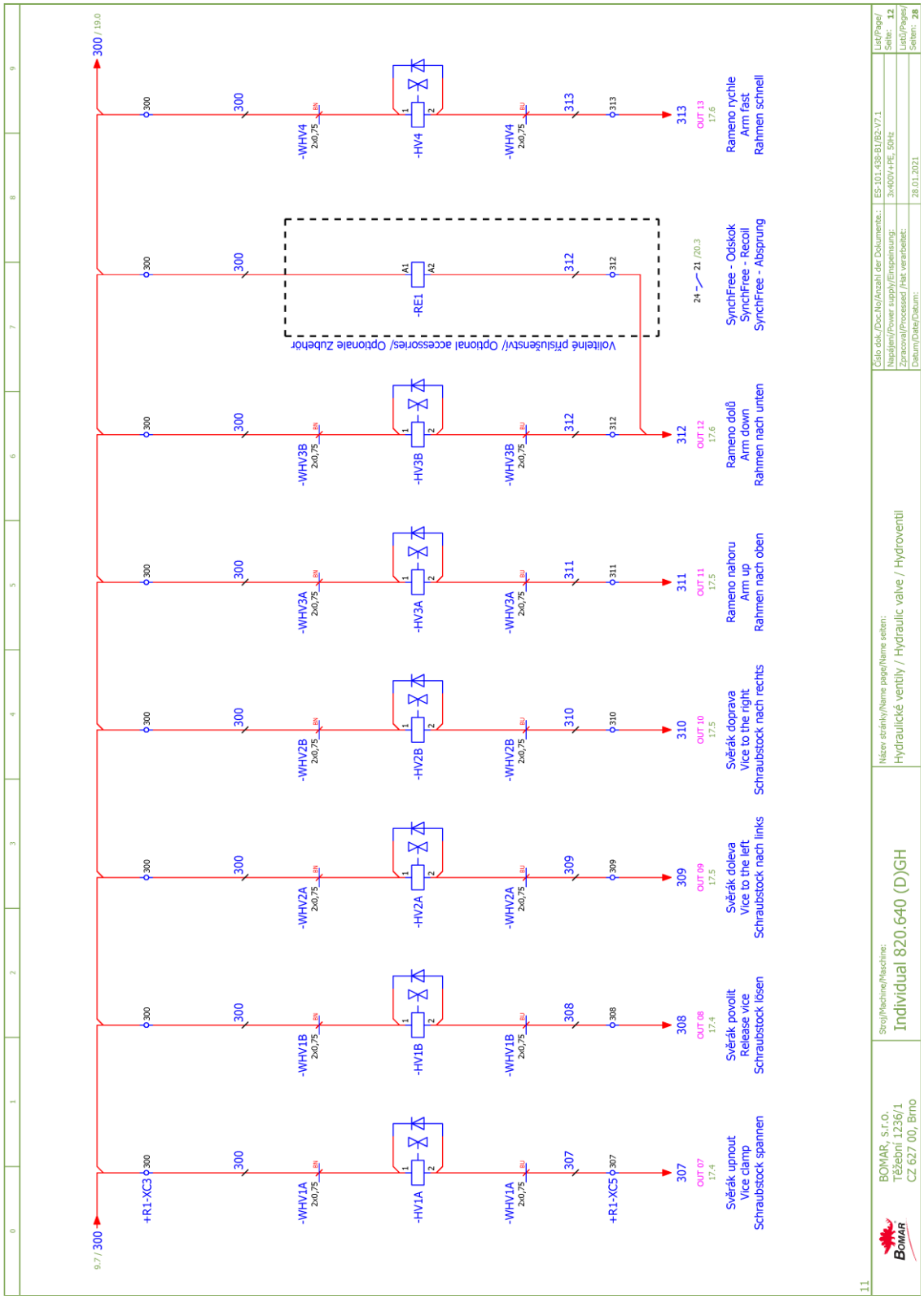
9.7 / 300
300 / 19.0
+R1-XC3
-WHV1A
-HV1A
-WHV1B
-HV1B
-WHV2A
-HV2A
-WHV2B
-HV2B
-WHV3A
-HV3A
-WHV3B
-HV3B
-RE1
-HV4
-WHV4
+R1-XC5
Volitelné příslušenství/ Optional accessories/ Optionale Zubehör
307
308
309
310
311
312
313
Svěrák upnout
Vice clamp
Schraubstock spannen
Svěrák povolit
Release vice
Schraubstock lösen
Svěrák doleva
Vice to the left
Schraubstock nach links
Svěrák doprava
Vice to the right
Schraubstock nach rechts
Rameno nahoru
Arm up
Rahmen nach oben
Rameno dolů
Arm down
Rahmen nach unten
SynchFree - Odskok
SynchFree - Recoil
SynchFree - Absprung
Rameno rychle
Arm fast
Rahmen schnell
BOMAR, s.r.o.
Těžební 1236/1
CZ 627 00, Brno
Stroj/Machine/Maschine:
Individual 820.640 (D)GH
Název stránky/Name page/Name seiten:
Hydraulické ventily / Hydraulic valve / Hydroventil
Číslo dok./Doc.No/Anzahl der Dokumente:
ES-101.438-B1/B2-V7.1
Napájení/Power supply/Einspeisung:
3x400V+PE, 50Hz
Zpracoval/Processed /hat verarbeitet:
Datum/Date/Datum:
28.01.2021
List/Page/Seite: 12
List/Pages/Seiten: 28

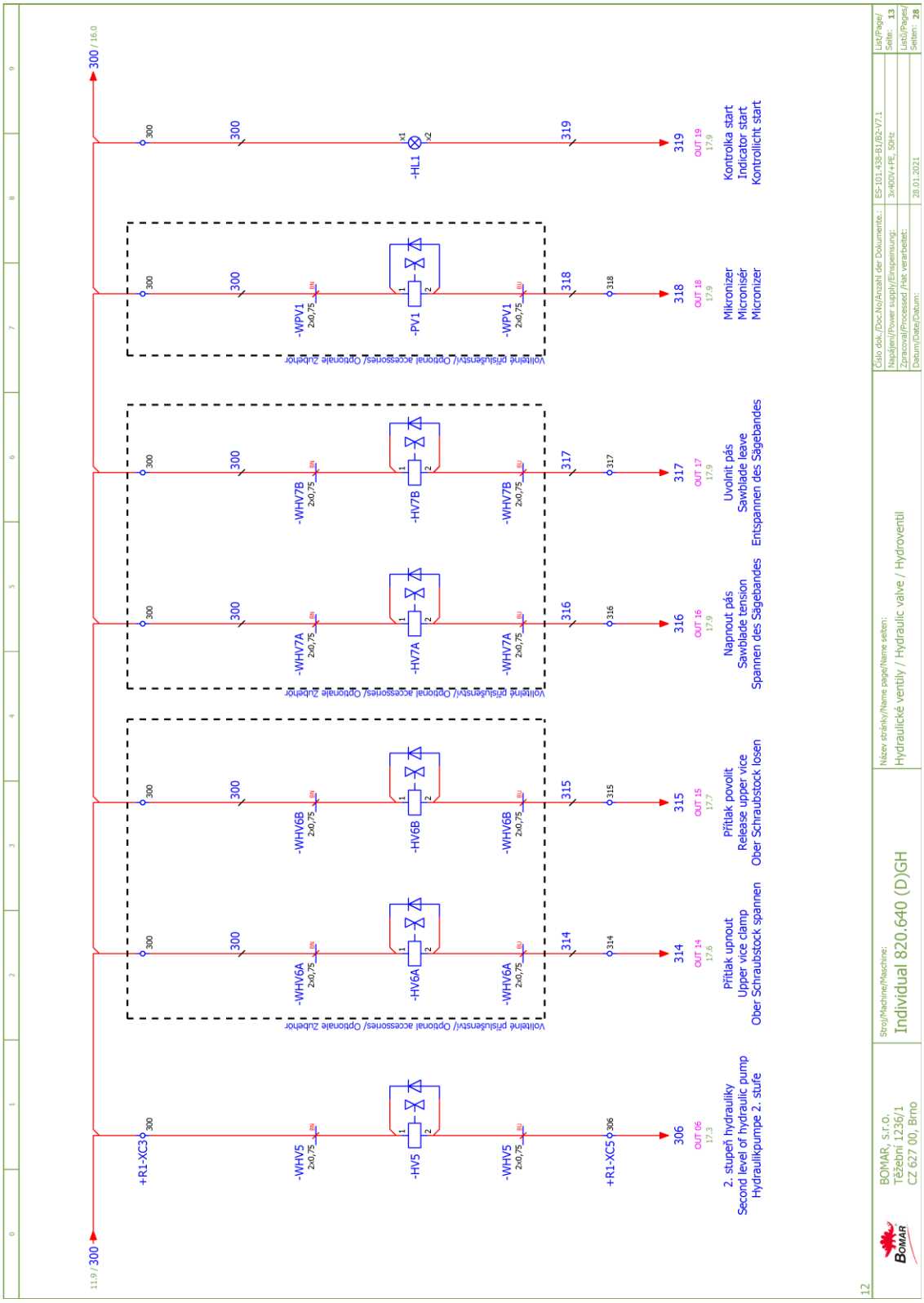
11.9 / 300
300 / 16.0
+R1-XC3
-WHV5
-HV5
-WHV5
+R1-XC5
306
OUT 06
17.3
2. stupeň hydrauliky
Second level of hydraulic pump
Hydraulikpumpe 2. stufe
Volitelné příslušenství/ Optional accessories/ Optionale Zubehör
-WHV6A
-HV6A
-WHV6A
314
OUT 14
17.6
Přítlak upnout
Upper vice clamp
Ober Schraubstock spannen
-WHV6B
-HV6B
-WHV6B
315
OUT 15
17.7
Přítlak povolit
Release upper vice
Ober Schraubstock losen
-WHV7A
-HV7A
-WHV7A
316
OUT 16
17.9
Napnout pás
Sawblade tension
Spannen des Sägebandes
-WHV7B
-HV7B
-WHV7B
317
OUT 17
17.9
Uvolnit pás
Sawblade leave
Entspannen des Sägebandes
-WPV1
-PV1
-WPV1
318
OUT 18
17.9
Mikronizer
Microniséř
Micronizer
-HL1
319
OUT 19
17.9
Kontrolka start
Indicator start
Kontrollicht start
BOMAR, s.r.o.
Těžební 1236/1
CZ 627 00, Brno
Stroj/Machine/Maschine:
Individual 820.640 (D)GH
Název stránky/Name page/Name seiten:
Hydraulické ventily / Hydraulic valve / Hydroventil
Číslo dok./Doc.No/Anzahl der Dokumente:
ES-101.438-81/B2-V7.1
Napájení/Power supply/Einspeisung:
3x400V+PE, 50Hz
Zpracoval/Processed /Hat verarbeitet:
Datum/Date/Datum:
28.01.2021
List/Page/
Seite: 13
Listů/Pages/
Seiten: 28
12

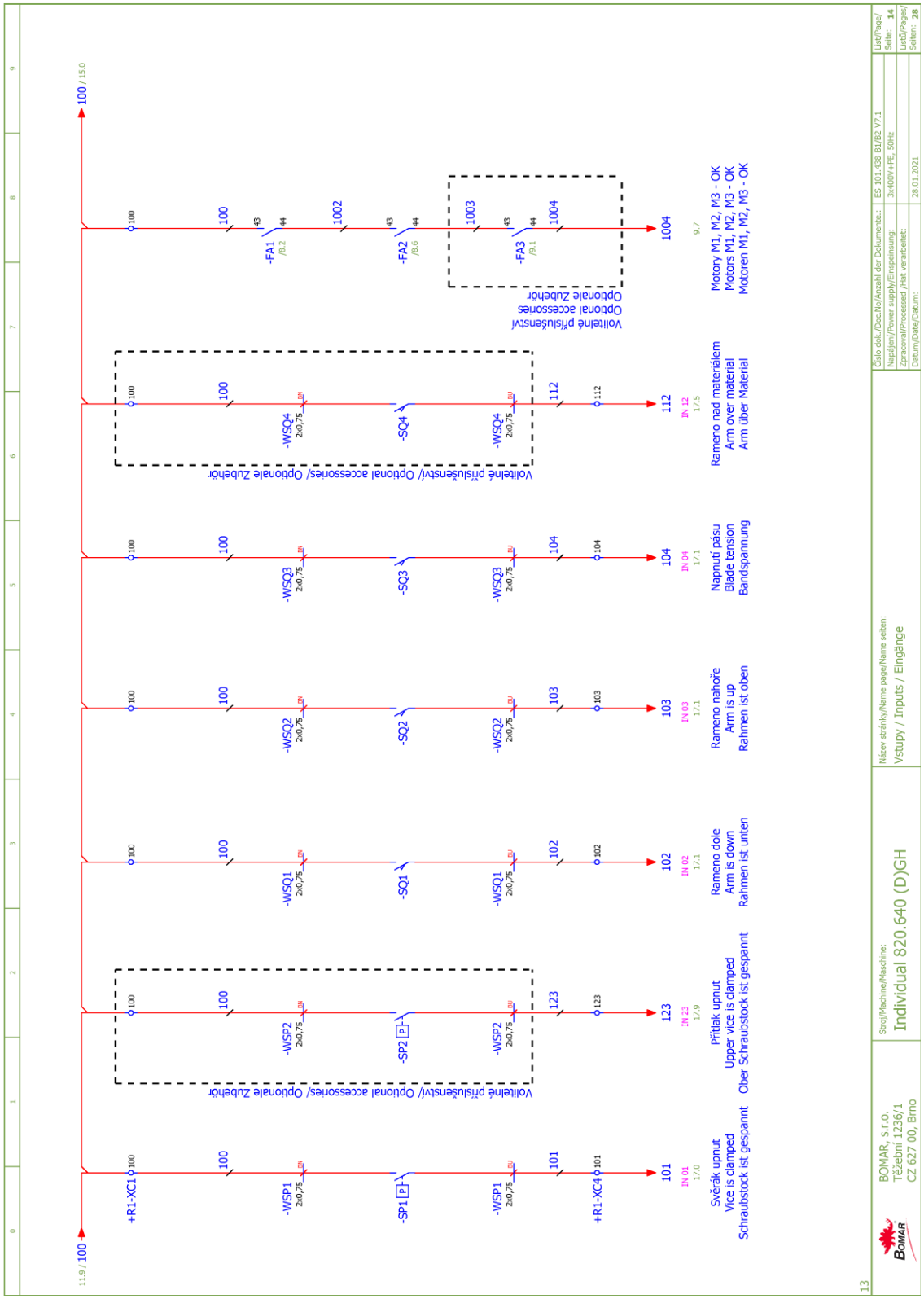
Svěrák upnut
Vice is clamped
Schraubstock ist gespannt
Přítlak upnut
Upper vice is clamped
Ober Schraubstock ist gespannt
Rameno dole
Arm is down
Rahmen ist unten
Rameno nahoře
Arm is up
Rahmen ist oben
Napnutí pásu
Blade tension
Bandspannung
Rameno nad materiálem
Arm over material
Arm über Material
Motory M1, M2, M3 - OK
Motors M1, M2, M3 - OK
Motoren M1, M2, M3 - OK
Volitelné příslušenství/ Optional accessories/ Optionale Zubehör
BOMAR, s.r.o.
Těžební 1236/1
CZ 627 00, Brno
Individual 820.640 (D)GH
Vstupy / Inputs / Eingänge

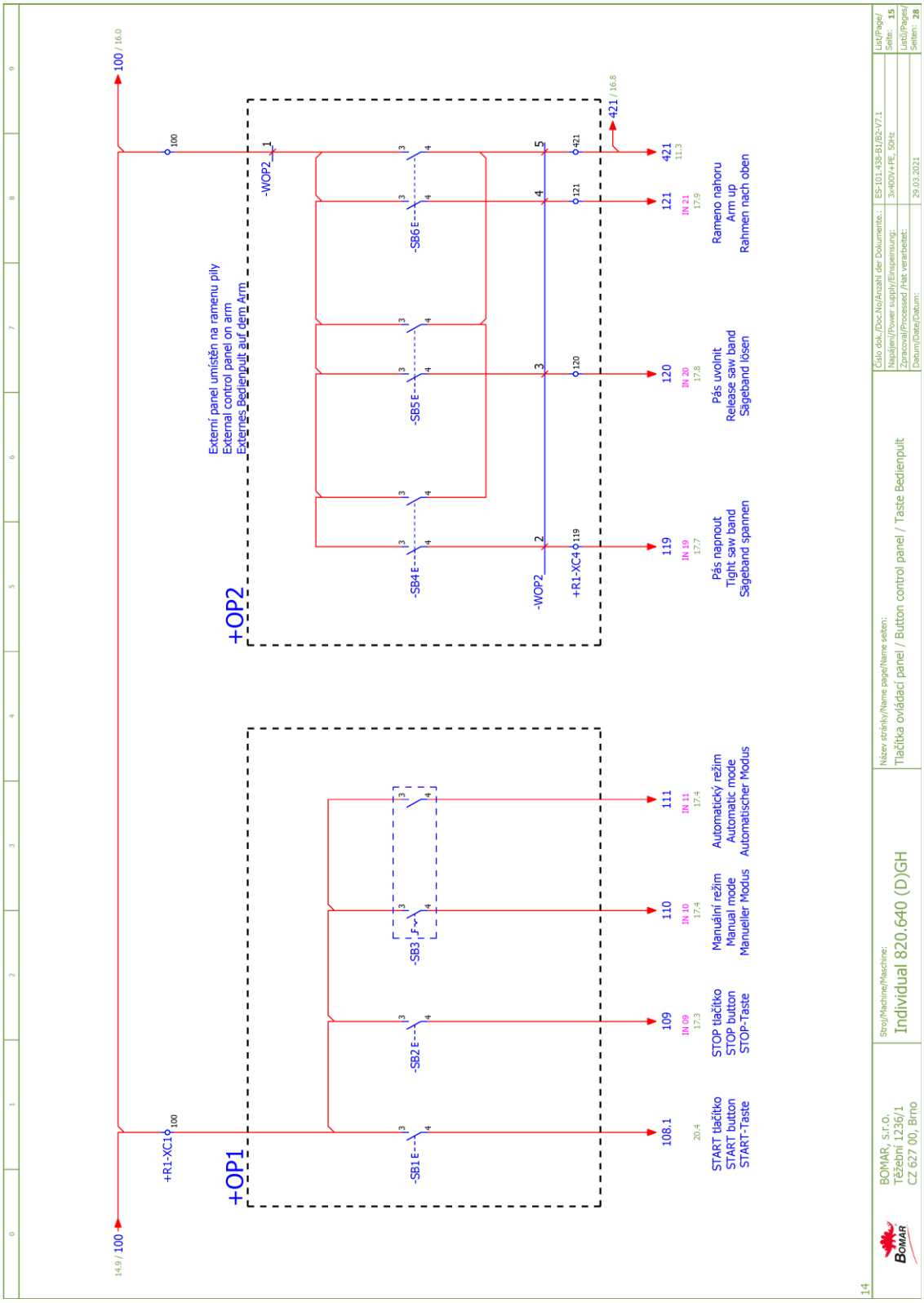
+OP1
+OP2
-SB1 E
-SB2 E
-SB3
-SB4 E
-SB5 E
-SB6 E
-WOP2
+R1-XC1
+R1-XC4
START tlačítko
START button
START-Taste
STOP tlačítko
STOP button
STOP-Taste
Manuální režim
Manual mode
Manueller Modus
Automatický režim
Automatic mode
Automatischer Modus
Pás napnout
Tight saw band
Sägeband spannen
Pás uvolnit
Release saw band
Sägeband lösen
Rameno nahoru
Arm up
Rahmen nach oben
Externí panel umístěn na ramenu pily
External control panel on arm
Externes Bedienpult auf dem Arm
BOMAR, s.r.o.
Těžební 1236/1
CZ 627 00, Brno
Individual 820.640 (D)GH
Tlačítka ovládací panel / Button control panel / Taste Bedienpult
ES-101.438-B1/B2-V7.1
3x400V+PE, 50Hz
29.03.2021

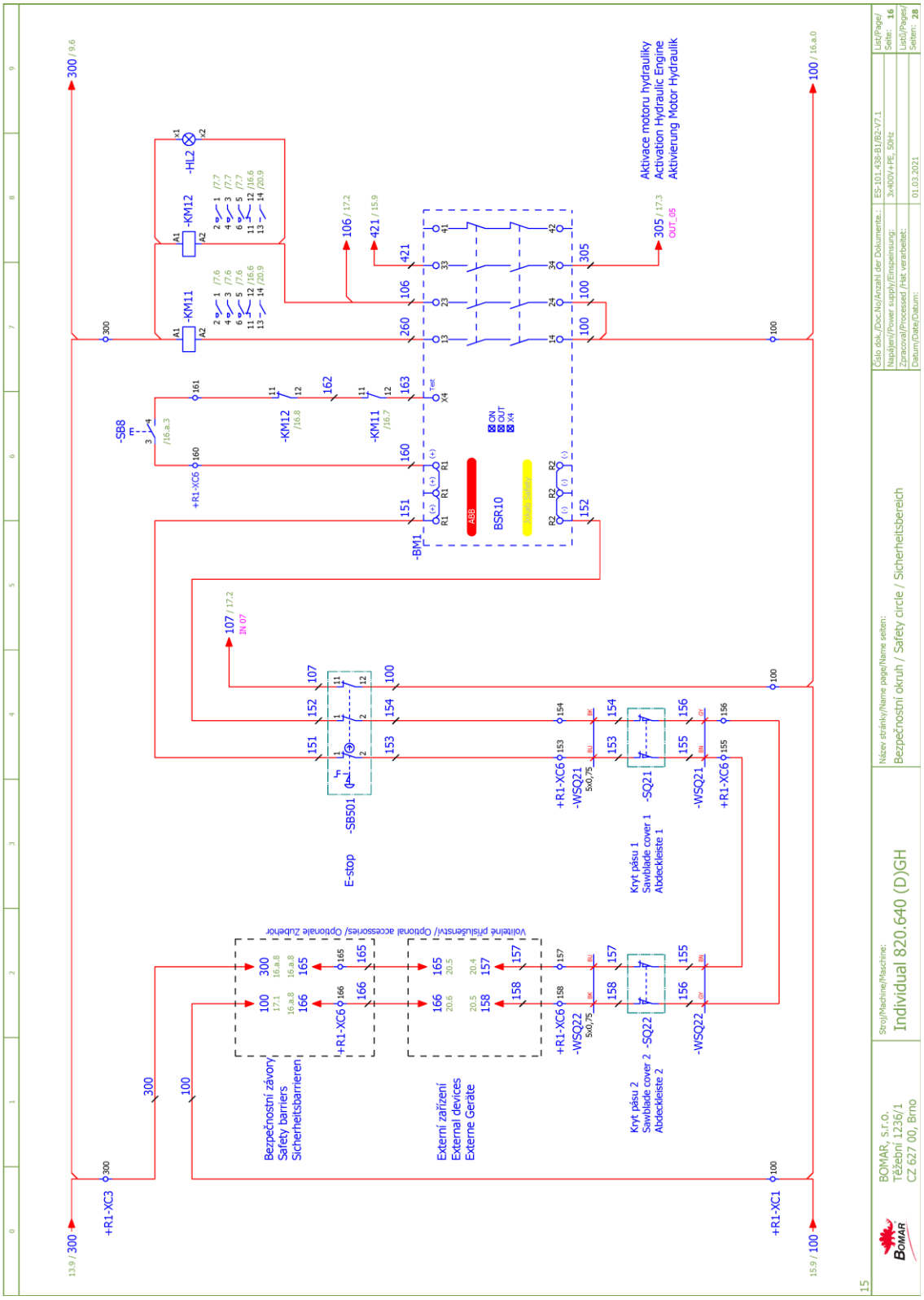
Aktivace motoru hydrauliky
Activation Hydraulic Engine
Aktivierung Motor Hydraulik
Bezpečnostní závory
Safety barriers
Sicherheitsbarrieren
Externí zařízení
External devices
Externe Geräte
Volitelné příslušenství/ Optional accessories/ Optionale Zubehör
E-stop
Kryt pásu 1
Sawblade cover 1
Abdeckleiste 1
Kryt pásu 2
Sawblade cover 2
Abdeckleiste 2
BSR10
Název stránky/Name page/Name seiten:
Bezpečnostní okruh / Safety circle / Sicherheitsbereich
Stroj/Machine/Maschine:
Individual 820.640 (D)GH
BOMAR, s.r.o.
Těžební 1236/1
CZ 627 00, Brno
List/Page/Seite: 16
Listů/Pages/Seiten: 28

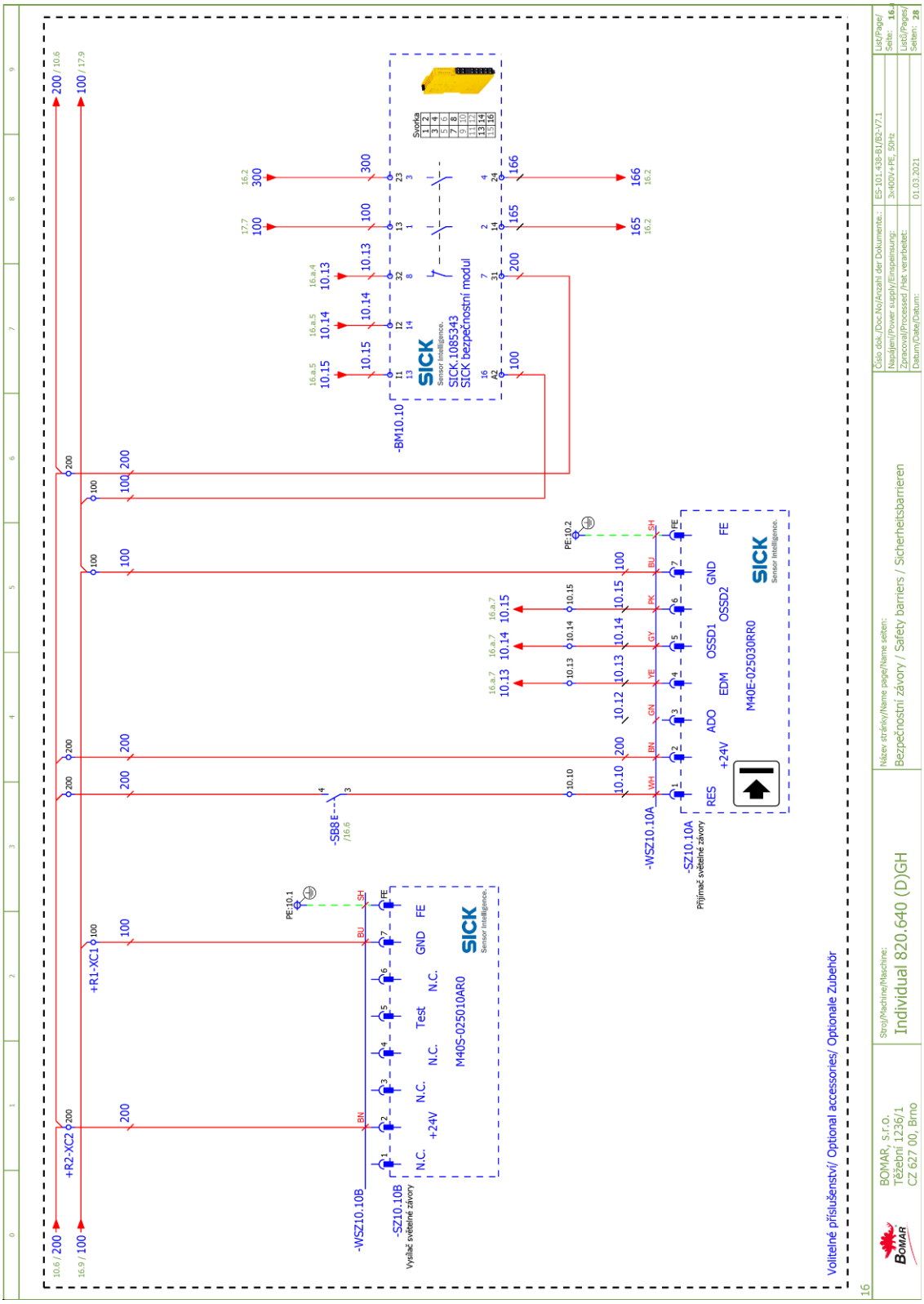
-BM10.10
SICK
Sensor Intelligence.
SICK.1085343
SICK bezpečnostní modul
Svorka
-SB8E
-WSZ10.10B
-SZ10.10B
Vysílač světelné závory
M40S-025010AR0
-WSZ10.10A
-SZ10.10A
Přijímač světelné závory
M40E-025030RR0
+R1-XC1
+R2-XC2
Volitelné příslušenství/ Optional accessories/ Optionale Zubehör
BOMAR, s.r.o.
Těžební 1236/1
CZ 627 00, Brno
Individual 820.640 (D)GH
Bezpečnostní závory / Safety barriers / Sicherheitsbarrieren
ES-101.438-B1/B2-V7.1
3x400V+PE, 50Hz
01.03.2021

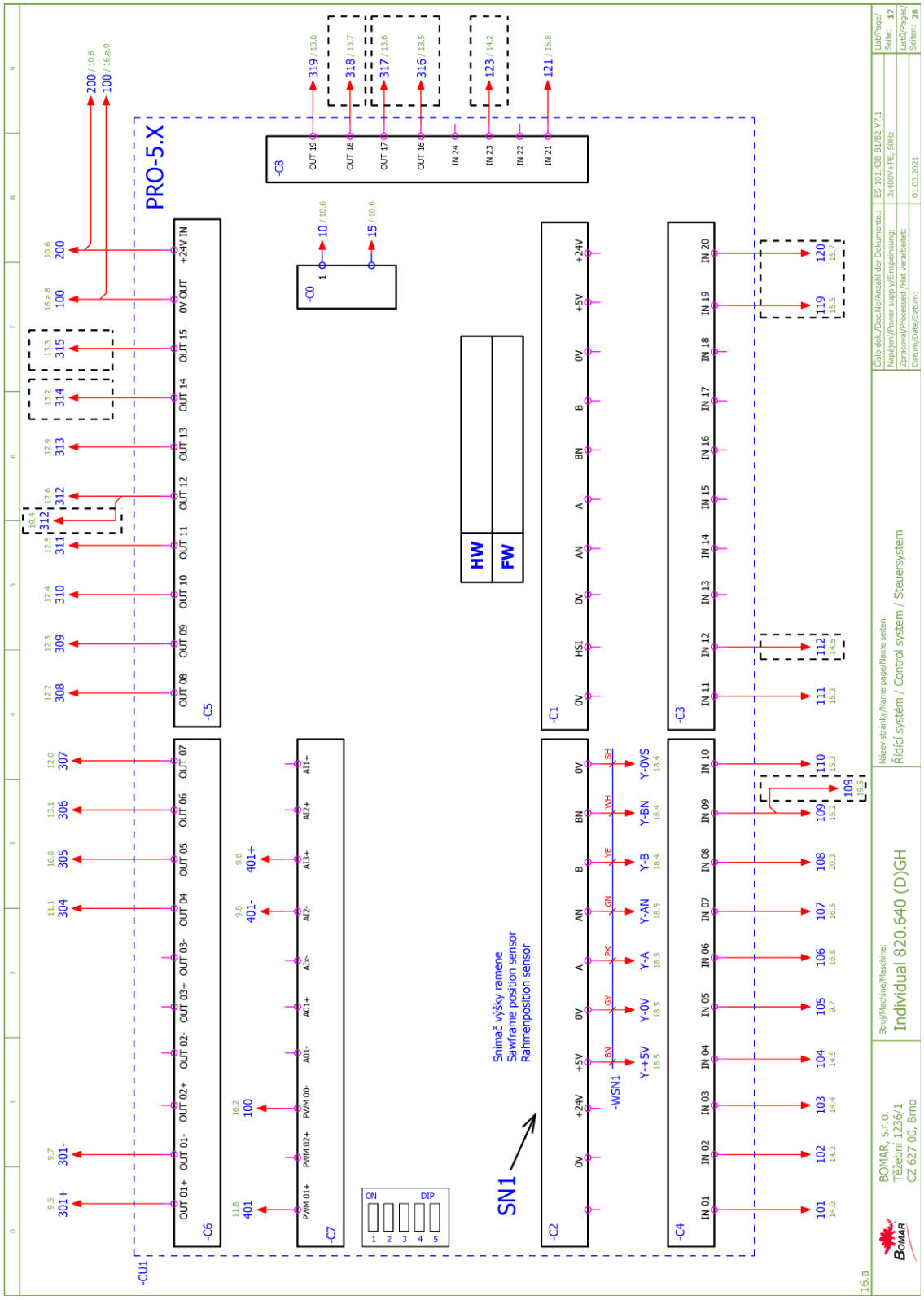
PRO-5.X
-CU1
-C5
-C6
-C7
-C8
-C0
-C1
-C2
-C3
-C4
HW
FW
SN1
Snímač výšky ramene
Sawframe position sensor
Rahmenposition sensor
-WSN1
Y-+5V
Y-0V
Y-A
Y-AN
Y-B
Y-BN
Y-0VS
ON
DIP
Číslo dok./Doc.No/Anzahl der Dokumente.:
ES-101.438-B1/B2-V7.1
Napájení/Power supply/Einspeisung:
3x400V+PE, 50Hz
Zpracoval/Processed /hat verarbeitet:
Datum/Date/Datum:
01.03.2021
List/Page/Seite: 17
Listů/Pages/Seiten: 28
Název stránky/Name page/Name seiten:
Řídící systém / Control system / Steuersystem
Stroj/Machine/Maschine:
Individual 820.640 (D)GH
BOMAR, s.r.o.
Těžební 1236/1
CZ 627 00, Brno
16.a

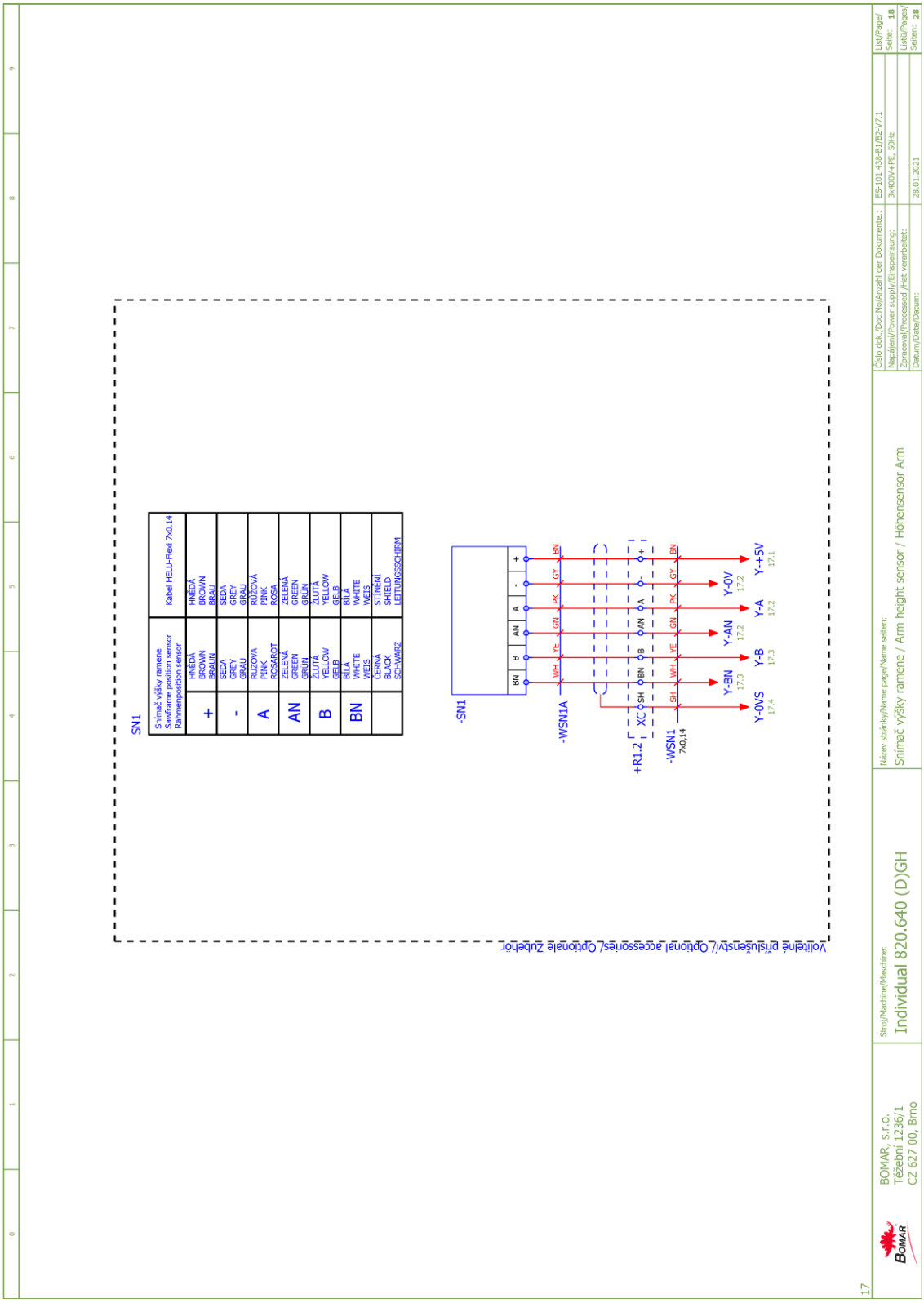
SN1
Snímač výšky ramene
Sawframe position sensor
Rahmenposition sensor
Kabel HELU-Flexi 7x0.14
+ HNĚDÁ BROWN BRAUN
- SEDÁ GREY GRAU
A RŮŽOVÁ PINK ROSA
AN ZELENÁ GREEN GRÜN
B ŽLUTÁ YELLOW GELB
BN BÍLÁ WHITE WEIS
STÍNĚNÍ SHIELD SCHIRM
-SN1
BN B AN A - +
-WSN1A
WH YE GN PK GY BN
+R1.2
XC SH BN B AN A - +
-WSN1
7x0,14
SH WH YE GN PK GY BN
Y-0VS 17.4
Y-BN 17.3
Y-B 17.3
Y-AN 17.2
Y-A 17.2
Y-0V 17.2
Y-+5V 17.1
Volitelné příslušenství/ Optional accessories/ Optionale Zubehör
17
BOMAR, s.r.o.
Těžební 1236/1
CZ 627 00, Brno
Stroj/Machine/Maschine:
Individual 820.640 (D)GH
Název stránky/Name page/Name seiten:
Snímač výšky ramene / Arm height sensor / Höhensensor Arm
Číslo dok./Doc.No/Anzahl der Dokumente:
ES-101.438-81/B2-V7.1
Napájení/Power supply/Einspeisung:
3x400V+PE, 50Hz
Zpracoval/Processed /Hat verarbeitet:
Datum/Date/Datum:
28.01.2021
List/Page/Seite: 18
Listů/Pages/Seiten: 28

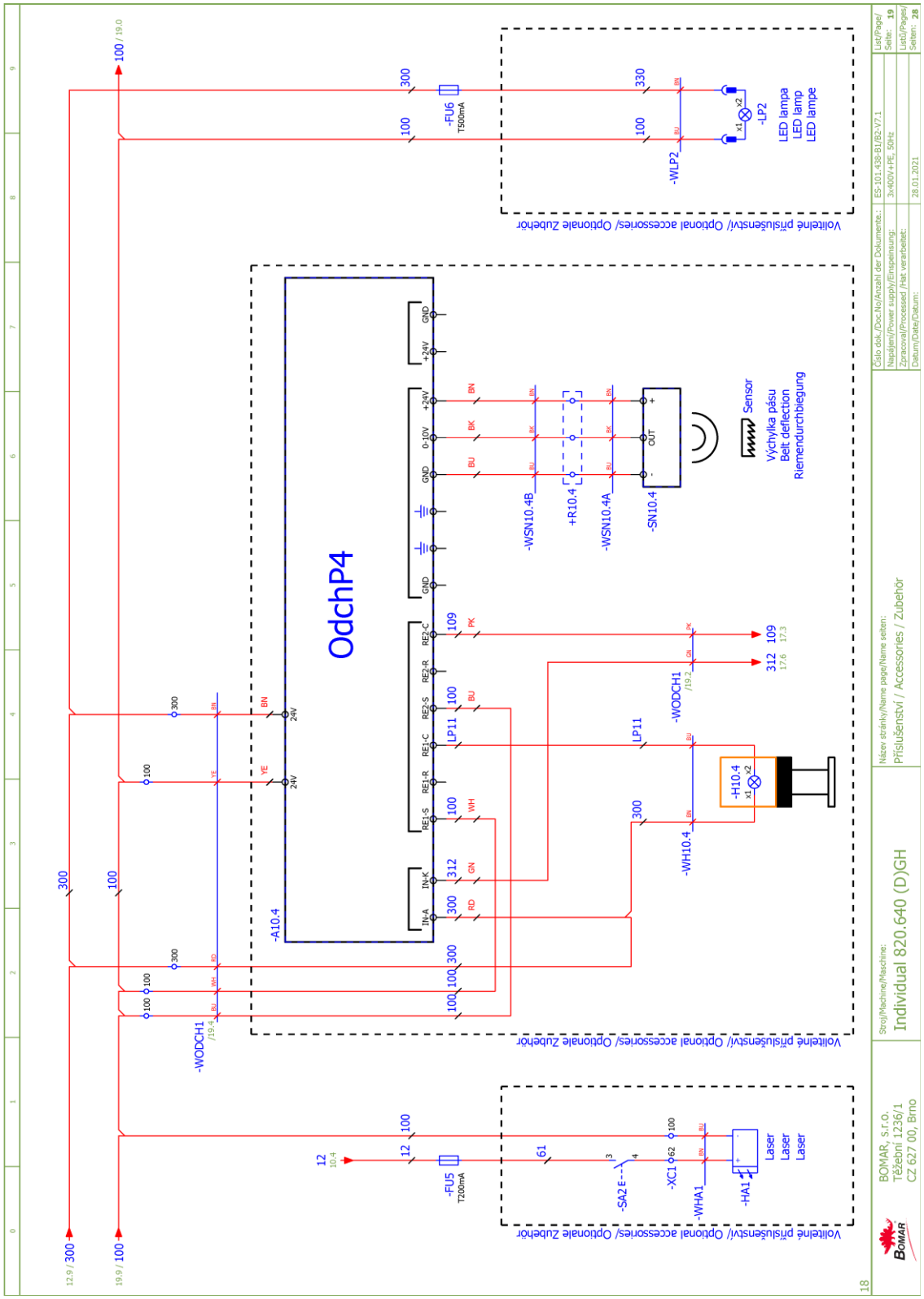
OdchP4
-A10.4
-FU6
T500mA
-LP2
LED lampa
LED lamp
LED lampe
-WLP2
-WSN10.4B
+R10.4
-WSN10.4A
-SN10.4
Sensor
Výchylka pásu
Belt deflection
Riemendurchbiegung
-WODCH1
-H10.4
-WH10.4
-FU5
T200mA
-SA2
-XC1
-WHA1
-HA1
Laser
Volitelné příslušenství/ Optional accessories/ Optionale Zubehör
Číslo dok./Doc.No/Anzahl der Dokumente: ES-101.438-B1/B2-V7.1
Napájení/Power supply/Einspeisung: 3x400V+PE, 50Hz
Zpracoval/Processed /hat verarbeitet:
Datum/Date/Datum: 28.01.2021
List/Page/Seite: 19
List/Pages/Seiten: 28
Název stránky/Name page/Name seiten: Příslušenství / Accessories / Zubehör
Stroj/Machine/Maschine: Individual 820.640 (D)GH
BOMAR, s.r.o.
Těžební 1236/1
CZ 627 00, Brno

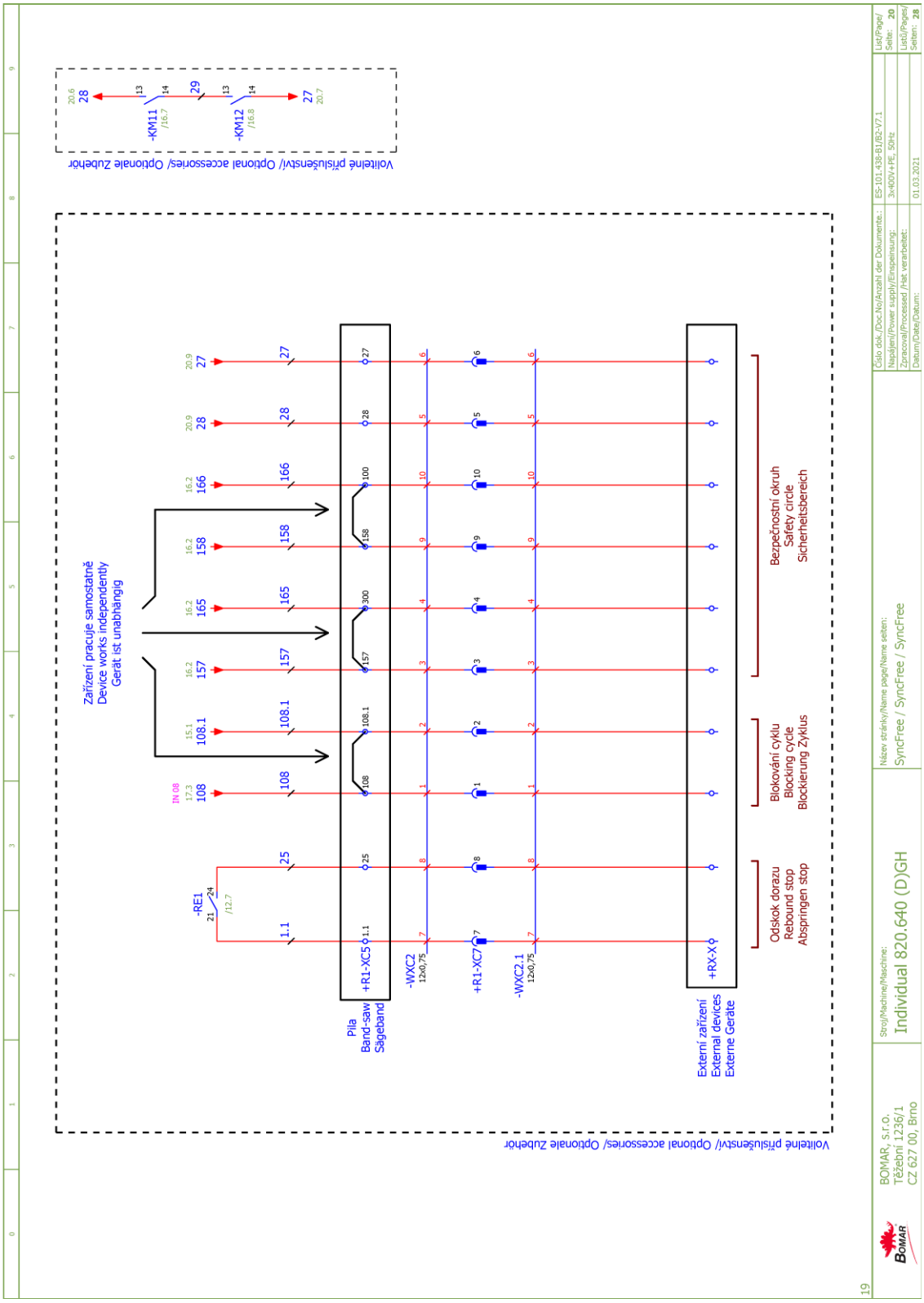
Volitelné příslušenství/ Optional accessories/ Optionale Zubehör
20.6
28
13
14
-KM11
/16.7
29
13
14
-KM12
/16.8
27
20.7
Zařízení pracuje samostatně
Device works independently
Gerät ist unabhängig
-RE1
21
24
/12.7
IN 08
17.3
108
15.1
108.1
16.2
157
16.2
165
16.2
158
16.2
166
20.9
28
20.9
27
1.1
25
108
108.1
157
165
158
166
28
27
Pila
Band-saw
Sägeband
+R1-XC5
-WXC2
12x0,75
+R1-XC7
-WXC2.1
12x0,75
+RX-X
Externí zařízení
External devices
Externe Geräte
Odskok dorazu
Rebound stop
Abspringen stop
Blokování cyklu
Blocking cycle
Blockierung Zyklus
Bezpečnostní okruh
Safety circle
Sicherheitsbereich
Volitelné příslušenství/ Optional accessories/ Optionale Zubehör
19
BOMAR, s.r.o.
Těžební 1236/1
CZ 627 00, Brno
Stroj/Machine/Maschine:
Individual 820.640 (D)GH
Název stránky/Name page/Name seiten:
SyncFree / SyncFree / SyncFree
Číslo dok./Doc.No/Anzahl der Dokumente:
ES-101.438-81/B2-V7.1
Napájení/Power supply/Einspeisung:
3x400V+PE, 50Hz
Zpracoval/Processed /Hat verarbeitet:
Datum/Date/Datum:
01.03.2021
List/Page/
Seite: 20
List(s)/Page(s)/
Seiten: 28

6.2. Elektrické schema – automatické natáčení úhlu (volitelné vybavení/ Elektroschema – Automatisches Winkelschießen der Arm (optionale Zubehör) / Wiring diagrams – automatic setting of the angle of the saw arm (optional accessory)

6.2.1. 3x400V+PE, 50 Hz

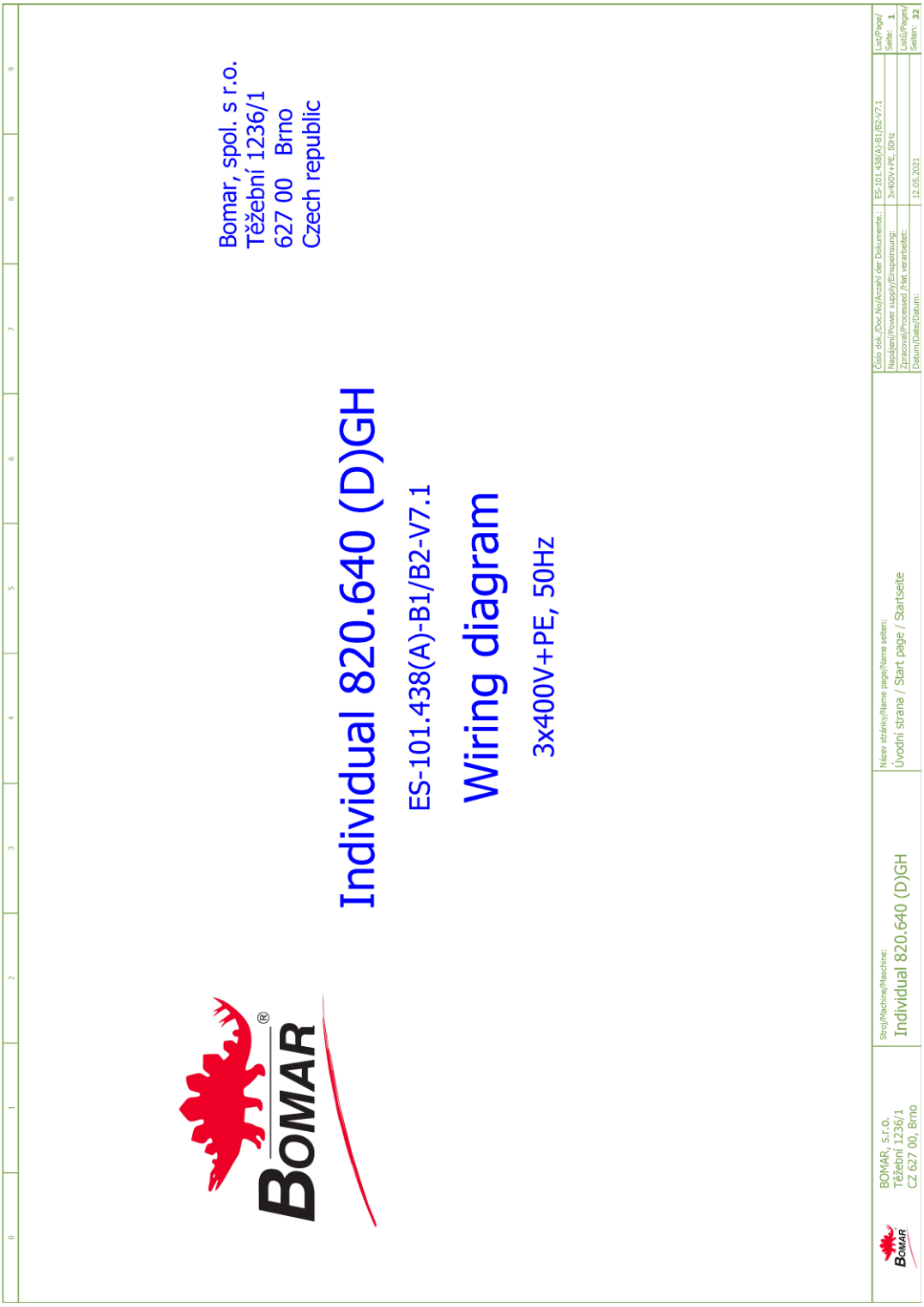

Obsah / Table of contents / Inhalt

Strana Page Seite	Název strany Page name Seitenname	Datum Date Datum
/1	Úvodní strana / Start page / Startseite	12.05.2021
/2	Obsah / Table of contents / Inhaltsverzeichnis	18.06.2021
/2.a	Obsah / Table of contents / Inhaltsverzeichnis	13.05.2021
/3	Kusovník artiklů / Parts list / Artikelstückliste	13.05.2021
/3.a	Kusovník artiklů / Parts list / Artikelstückliste	13.05.2021
/3.b	Kusovník artiklů / Parts list / Artikelstückliste	13.05.2021
/3.c	Kusovník artiklů / Parts list / Artikelstückliste	13.05.2021
/3.d	Kusovník artiklů / Parts list / Artikelstückliste	13.05.2021
/3.e	Kusovník artiklů / Parts list / Artikelstückliste	13.05.2021
/3.f	Kusovník artiklů / Parts list / Artikelstückliste	18.06.2021
/3.g	Kusovník artiklů / Parts list / Artikelstückliste	13.05.2021
/3.h	Kusovník artiklů / Parts list / Artikelstückliste	13.05.2021
/4	I/O řídící systém / I/O Control station / I/O Steuerung	12.05.2021
/5	Rozmístění prvků v rozvaděči R1 / Placement of elements in enclosure R1/ Platzierung der Elemente im Schaltschrank R1	18.06.2021
/6	Ovládací panely / Control panely / Bedienpulten	06.05.2021
/7	Silová část / Power part / Feld partie	18.06.2021
/8	Silová část M1, M2 / Power part M1, M2 / Feld partie M1, M2	17.06.2021
/9	Silová část M3, M4 / Power part M3, M4 / Feld partie M3, M4	18.06.2021
/10	Silová část M5 / Power part M5 / Feld partie M5	17.06.2021
/11	Deska zdroje / Power board / Netzgerat-Platte	13.05.2021
/12	Stykače motorů / Motor contactor / Motor-Schutzschalter	13.05.2021
/13	Hydraulické ventily / Hydraulic valve / Hydroventil	13.05.2021
/14	Hydraulické ventily / Hydraulic valve / Hydroventil	13.05.2021
/15	Vstupy / Inputs / Eingänge	13.05.2021
/16	Vstupy / Inputs / Eingänge	17.06.2021
/17	Tlačítka ovládací panel / Button control panel / Taste Bedienpult	13.05.2021
/18	Bezpečnostní okruh / Safety circle / Sicherheitsbereich	13.05.2021
/19	Bezpečnostní závory / Safety barriers / Sicherheitsbarrieren	13.05.2021

Obsah / Table of contents / Inhalt

Strana Page Seite	Název strany Page name Seitenname	Datum Date Datum
/20	Řídící systém / Control system / Steuersystem	13.05.2021
/21	Snímač výšky ramene / Arm height sensor / Höhensensor Arm	13.05.2021
/22	Příslušenství / Accessories / Zubehör	13.05.2021
/23	SyncFree / SyncFree / SyncFree	13.05.2021

Kusovník artiklů / Parts list / Stückliste

Označení přístroje Device identification Geräteidentifikation	Typ přístroje Device description Gerätebeschreibung	Objednací číslo Type number Typennummer	Výrobce Manufacturer Hersteller	Skladové číslo Part number Lagernummer	Množství Quantity Menge	Umístění Location Stelle
-SQ10	Koncový spínač - 1NO + 1NC Limit switch - 1NO + 1NC Endschalter - 1NO + 1NC	FK 3301-M1	PIZZATO	91.173.015	1	/16.7
-ZD1	Napájecí zdroj - 15VAC/24VDC; 20VAC/28VDC Power supply unit - 15VAC/24VDC; 20VAC/28VDC Netzteil - 15VAC/24VDC; 20VAC/28VDC	ZDR-03	Bomar	265.915	1	/11.3
-BM1	Bezpečnostní relé 24VDC, 3NO/1NC Safety relay 24VDC, 3NO/1NC Sicherheitsrelais 24VDC, 3NO/1NC	ABB.2TLA010040R0000	ABB	91.051.076	1	/18.5
-CU1	Klávesnice - fóliová Touch-sensitive keyboard Folientastatur	31.R230-207	AKI ELECTRONIC,spol.s.r.o.	31.R230-207	1	/20.0
-FA2	Motorový spouštěč - 6.3A Motor starter - 6.3A Motorstarter - 6.3A	MS116-6,3	ABB	91.045.023	1	/8.6
-SN10.4	Indukční snímač vzdálenosti Inductive proximity sensor Induktive Näherungssensor	BAW R06AC-UAF20B-EP03	BALLUFF	91.172.016	1	/22.6
-SQ4	Koncový spínač - 1NO Limit switch - 1NO Endschalter - 1NO	BNS 819-99-D-13-S80	BALLUFF	91.173.016	1	/16.0
-A10.4	Odchylka pásu Band deviation Bandabweichung	BDM2	BOMAR s.r.o.	266.254	1	/22.2
-TR1	Držák Holder Inhaber	30.6030-413	BOMAR s.r.o.	30.6030-413	1	/11.2
-SN2	Lineární inkrementální snímač - 10-30VDC/5V TTL line driver Linear Encoder - 10-30VDC / 5V TTL line driver Linear-Encoder - 10-30VDC / 5V TTL	LMIX2-026-08.0-1-01-L	ELGO	91.270.007	1	/21.5
-FU1	Pojistka trubičková - 500mA/250V, pomalá, 5x20 Tube fuse - 500mA/250V, slow, 5x20 Rohrsicherung - 500 mA / 250 V, langsam, 5x20	T500mA/250V	ESKA	91.230.011	1	/11.5
-FU4	Pojistka trubičková - 6,3A/250V, pomalá, 5x20 Tube fuse - 6,3A/250V, slow, 5x20 Rohrsicherung - T6,3A / 250V, langsam, 5x20	T6,3A/250V	ESKA	91.230.002	1	/11.5

The manufacturer reserves right to use an equivalent replacement device.

2.a

BOMAR, s.r.o. Těžební 1236/1 CZ 627 00, Brno	Stroj/Machine/Maschine: Individual 820.640 (D)GH	Název stránky/Name page/Name seiten: Kusovník artiklů / Parts list / Artikelstückliste	Číslo dok./Doc.No/Anzahl der Dokumente.: ES-101.438(A)-B1/B2-V7.1 Napájení/Power supply/Einspeinsung: 3x400V+PE, 50Hz Zpracoval/Processed /Hat verarbeitet: Datum/Date/Datum: 13.05.2021	List/Page/Seite: 3 Listů/Pages/Seiten: 32

Kusovník artiklů / Parts list / Stückliste

Označení přístroje Device identification Geräteidentifikation	Typ přístroje Device description Gerätebeschreibung	Objednací číslo Type number Typennummer	Výrobce Manufacturer Hersteller	Skladové číslo Part number Lagernummer	Množství Quantity Menge	Umístění Location Stelle
-RP1	Potenciometr 4k7 Potenciometer 4k7 Potentiometer 4k7	TP195 4k7/N20A	Elektronické součástky CZ, a.s	91.283.015	1	/9.8
-RP1	Hlavice potenciometru - 24mm Head of potentiometer 24mm Leiter Potentiometer 24mm	S8877 BLK	GES-ELECTRONICS, a.s.	91.060.063	1	/9.8
-HV1A	Dioda 800V 3A Diode 800V 3A Diode 800V 3A	BY399 DO201	GM-electronics	91.280.009	6	/13.0
-RCF1	Filtr RFC vývodový Efferent RFC filter Ableitenden RFC Filter	FBOPR1624	Ing. Miroslav Vlček	91.041.015	1	/8.1
-RCF2	Filtr RFC vývodový Efferent RFC filter Ableitenden RFC Filter	FBOPR1624	Ing. Miroslav Vlček	91.041.015	1	/8.5
-RCF3	Filtr RFC vývodový Efferent RFC filter Ableitenden RFC Filter	FBOPR1624	Ing. Miroslav Vlček	91.041.015	1	/9.1
-RCF11	Filtr RFC vývodový Efferent RFC filter Ableitenden RFC Filter	FBOPR1624	Ing. Miroslav Vlček	91.041.015	1	/7.6
-RCF12	Filtr RFC vývodový Efferent RFC filter Ableitenden RFC Filter	FBOPR1624	Ing. Miroslav Vlček	91.041.015	1	/7.7
-+R10.4	Kleštinová vývodka Cable gland Kabelverschraubung	AG-1545.12.06	Schmachtl CZ s.r.o.	91.070.010	2	/22.6
-+R10.4	Matice černá Nut black Nuss schwarz	AG8245.12	Schmachtl CZ s.r.o.	91.072.010	2	/22.6
-FA1	Motorový spouštěč - 0.4A Motor starter - 0.4A Motorstarter - 0.4A	MS116-0,4	ABB	91.045.017	1	/8.1
-FA1	Pomocné kontakty - 1xNO+1xNC Auxiliary contacts - 1xNO+1xNC Hilfskontakte - 1xNO+1xNC	HKF1-11	ABB	91.046.002	1	/8.1

The manufacturer reserves right to use an equivalent replacement device.

3

Kusovník artiklů / Parts list / Stückliste

Označení přístroje Device identification Geräteidentifikation	Typ přístroje Device description Gerätebeschreibung	Objednací číslo Type number Typennummer	Výrobce Manufacturer Hersteller	Skladové číslo Part number Lagernummer	Množství Quantity Menge	Umístění Location Stelle
-FA2	Pomocné kontakty - 1xNO+1xNC Auxiliary contacts - 1xNO+1xNC Hilfskontakte - 1xNO+1xNC	HKF1-11	ABB	91.046.002	1	/8.6
-FA3	Motorový spouštěč - 1A Motor starter - 1A Motorstarter - 1A	MS116-1,00	ABB	91.045.019	1	/9.1
-FA3	Pomocné kontakty - 1xNO+1xNC Auxiliary contacts - 1xNO+1xNC Hilfskontakte - 1xNO+1xNC	HKF1-11	ABB	91.046.002	1	/9.1
-FU1	Svorka pojistková Fuse terminal Sicherungsklemme	WK4/THSi5U	WIELAND	91.251.102	1	/11.5
-FU2	Pojistka trubičková - 800mA/250V, pomalá, 5x20 Tube fuse - 800A/250V, slow, 5x20 Rohrsicherung - 800A / 250V, langsam, 5x20	T800mA/250V	ESKA	91.230.010	1	/11.5
-FU2	Svorka pojistková Fuse terminal Sicherungsklemme	WK4/THSi5U	WIELAND	91.251.102	1	/11.5
-FU3	Pojistka trubičková - 1A/250V, pomalá, 5x20 Tube fuse - 1A/250V, slow, 5x20 Rohrsicherung - 1A / 250V, langsam, 5x20	T1A/250V	ESKA	91.230.031	1	/11.5
-FU3	Svorka pojistková Fuse terminal Sicherungsklemme	WK4/THSi5U	WIELAND	91.251.102	1	/11.5
-FU4	Svorka pojistková Fuse terminal Sicherungsklemme	WK4/THSi5U	WIELAND	91.251.102	1	/11.5
-H10.4	Maják - základna Lighthouse - Base Leuchtturm - Basis	SL7-CB-100	EATON	91.063.058	1	/22.3
-H10.4	Maják - žlutý Lighthouse - yellow Leuchtturm - gelb	SL7-L-Y	EATON	91.063.059	1	/22.3
-H10.4	Žárovka 24V Lamp 24V Lampe 24V	SL7-L24	EATON	91.063.061	1	/22.3

The manufacturer reserves right to use an equivalent replacement device.

3.a

Kusovník artiklů / Parts list / Stückliste

Označení přístroje Device identification Geräteidentifikation	Typ přístroje Device description Gerätebeschreibung	Objednací číslo Type number Typennummer	Výrobce Manufacturer Hersteller	Skladové číslo Part number Lagernummer	Množství Quantity Menge	Umístění Location Stelle
-HL1	Signálka zelená na adaptér Green light for Eaton adapter Grünes Licht für Eaton-Adapter	M22-LED-G	EATON	91.061.023	1	/14.9
-HL2	Signálka LED bílá na adaptér White LED light for adapter Weißes LED-Licht für Adapter	M22-LED-W	EATON	91.061.034	1	/18.9
-KM1	Ministýkač 4kW/400V Minicontactor 4kW/400V Minischutz 4kW/400V	B6S-30-01-1.7-71	ABB	91.040.049	1	/12.1
-KM2	Ministykač - 4kW/400V, 3P Mini contactor - 4kW/400V, 3P Mini-Schütz - 4kW/400V, 3P	B6S-30-10-1.7-71	ABB	91.040.048	1	/12.3
-KM3	Ministýkač 4kW/400V Minicontactor 4kW/400V Minischutz 4kW/400V	B6S-30-01-1.7-71	ABB	91.040.049	1	/12.6
-KM11	Stýkač 5,5kW/400V Contactor 5,5kW/400V Schütz 5,5kW/400V	AF12-30-01-11	ABB	91.040.051	1	/18.7
-KM11	Pomocný kontakt - 1xNO Auxiliary contact - 1xNO Hilfskontakt - 1xNO	CA4-10	ABB	91.041.044	3	/18.7
-KM12	Stýkač 5,5kW/400V Contactor 5,5kW/400V Schütz 5,5kW/400V	AF12-30-01-11	ABB	91.040.051	1	/18.8
-KM12	Pomocný kontakt - 1xNO Auxiliary contact - 1xNO Hilfskontakt - 1xNO	CA4-10	ABB	91.041.044	3	/18.8
-MV1	Ventilátor 24VDC, 5W Fan 24VDC, 5W Fan 24VDC, 5,W	EEC0252B1-A99	SUNON	91.015.139	1	/12.8
-PA1	Pojistkový odpínač pro válcové vložky - 3P Switch fuse for the cylinder inserts - 3P Schalter Sicherung für den Zylindereinsätze - 3P	E 93/32	ABB	91.241.014	1	/9.4
-PA2	Pojistkový odpínač pro válcové vložky - 3P Switch fuse for the cylinder inserts - 3P Schalter Sicherung für den Zylindereinsätze - 3P	E 93/32	ABB	91.241.014	1	/10.2

The manufacturer reserves right to use an equivalent replacement device.

3.b

Kusovník artiklů / Parts list / Stückliste

Označení přístroje Device identification Geräteidentifikation	Typ přístroje Device description Gerätebeschreibung	Objednací číslo Type number Typennummer	Výrobce Manufacturer Hersteller	Skladové číslo Part number Lagernummer	Množství Quantity Menge	Umístění Location Stelle
-PA3	Pojistkový odpojovač E-90 - 2P Fuse disconnector E-90 - 2P Sicherungstrenner E90 - 2P	E 92/32	ABB	91.241.013	1	/11.1
-QS1	3 pólový odpínač, 25A Disconnector - 3P, 25A Trennschalter - 3P, 25A	OT25FT3	ABB	91.170.016	1	/7.0
-QS1	Rukojeť odpínače - černá Handle switch - black Griffschalter - schwarz	OHBS2RJ	ABB	91.180.015	1	/7.0
-QS1	Kryt svorek Terminal shroud Klemmenabdeckung	OTS40T3	ABB	91.170.017	1	/7.0
-RE1	Patice pro relé Relay socket Relaissockel	CR-PSS	ABB	91.051.048	1	/13.7
-RE1	Paticové relé CR-P Plug-in relay CR-P Stecken Sie in Relais CR-P	CR-P024DC2	ABB	91.051.049	1	/13.7
-RP1	Svorka rychloupínací Fastconnect clamp Fast Connect Klemm	WAGO 224-112	WAGO	91.250.009	3	/9.8
-SA2	Hlavice tlačítka - černá Head button - black Kopftaste - schwarz	M22-D-S	EATON	91.060.035	1	/22.1
-SA2	Upevňovací adaptér + 1NO Attaching adapter + 1NO Montageadapter + 1NO	M22-AK10	EATON	91.061.021	1	/22.1
-SB1	Hlavice prosvětleného tlačítka zelená Green transparent switch Grün transparent Schalter	M22-DL-G	EATON	91.060.031	1	/17.1
-SB1	Upevňovací adaptér + 1NO Attaching adapter + 1NO Montageadapter + 1NO	M22-AK10	EATON	91.061.021	1	/17.1
-SB2	Hlavice tlačítka - černá Head button - black Kopftaste - schwarz	M22-D-S	EATON	91.060.035	1	/17.2

The manufacturer reserves right to use an equivalent replacement device.

3.c

BOMAR, s.r.o. Těžební 1236/1 CZ 627 00, Brno	Stroj/Machine/Maschine: Individual 820.640 (D)GH	Název stránky/Name page/Name seiten: Kusovník artiklů / Parts list / Artikelstückliste	Číslo dok./Doc.No/Anzahl der Dokumente.: ES-101.438(A)-B1/B2-V7.1 Napájení/Power supply/Einspeinsung: 3x400V+PE, 50Hz Zpracoval/Processed /Hat verarbeitet: Datum/Date/Datum: 13.05.2021	List/Page/Seite: 3.d Listů/Pages/Seiten: 32

Kusovník artiklů / Parts list / Stückliste

Označení přístroje Device identification Geräteidentifikation	Typ přístroje Device description Gerätebeschreibung	Objednací číslo Type number Typennummer	Výrobce Manufacturer Hersteller	Skladové číslo Part number Lagernummer	Množství Quantity Menge	Umístění Location Stelle
-SB2	Upevňovací adaptér + 1NO Attaching adapter + 1NO Montageadapter + 1NO	M22-AK10	EATON	91.061.021	1	/17.2
-SB3	Hlavice 3 polohového přepínače Head of 3 position switch Leiter der 3-Positionsschalter	M22-WRK3	EATON	91.060.051	1	/17.2
-SB3	Kontaktní blok - 1NO Contact block - 1NO Kontaktblock - 1NO	M22-K10	EATON	91.061.022	1	/17.2
-SB3	Upevňovací adaptér + 1NO Attaching adapter + 1NO Montageadapter + 1NO	M22-AK10	EATON	91.061.021	1	/17.2
-SB8	Hlavice prosvětleného tlačítka žlutá Yellow trasparent switch Leiter beleuchtet gelbe Taste	M22-DL-Y	EATON	91.060.053	1	/18.6
-SB8	Upevňovací adaptér + 1NO Attaching adapter + 1NO Montageadapter + 1NO	M22-AK10	EATON	91.061.021	1	/18.6
-SB8	Kontaktní blok - 1NO Contact block - 1NO Kontaktblock - 1NO	M22-K10	EATON	91.061.022	1	/19.3
-SB501	Total stop - hlavice + 3xNC Emergency-stop mushroom push - button + 3xNC Not-Aus-Pilz - Taster + 3 xNC	YW1B-V4E02R	IDEC	91.060.084	1	/18.4
-SB501	Kontakt - 1x NO Contact - 1x NO Kontakt - 1x NO	YW-E10	IDEC	91.061.044	1	/18.4
-TR1	Toroidal transformer - 0-230-400V/20V/15V, 150VA Toroidal transformer - 0-230-400V/20V/15V, 150VA Ringkerntransformator - 0-230V-400V/20V/15V, 150VA	400V/230V/20V/15V 6A/2A 150VA	KARBAN s.r.o.	91.080.026	1	/11.2
-SQ21	Bezpečnostní koncový spínač - 2xNC Safety Limit Switch - 2x NC Sicherheitsendschalter - 2x NC	QKS8	KEDU	91.173.012	1	/18.4
-SQ22	Bezpečnostní koncový spínač - 2xNC Safety Limit Switch - 2x NC Sicherheitsendschalter - 2x NC	QKS8	KEDU	91.173.012	1	/18.2

The manufacturer reserves right to use an equivalent replacement device.

3.d

Kusovník artiklů / Parts list / Stückliste

Označení přístroje Device identification Geräteidentifikation	Typ přístroje Device description Gerätebeschreibung	Objednací číslo Type number Typennummer	Výrobce Manufacturer Hersteller	Skladové číslo Part number Lagernummer	Množství Quantity Menge	Umístění Location Stelle
-PA1	Pojistka válcová - 20A, 10x38, rychlá Tube fuse - 20A, 10x38, fast Rohrsicherung - 20A, 10x38, schnell	PV10 20A gG	OEZ	91.230.038	3	/9.4
-PA2	Pojistka válcová - 6A, 10x38, rychlá Tube fuse - 6A, 10x38, fast Rohrsicherung - 6A, 10x38, schnell	PV10 6A gG	OEZ	91.231.002	3	/10.2
-PA3	Pojistka válcová - 2A, 10x38, pomalá Tube fuse - 2A, 10x38, slow Rohrsicherung - 2A, 10x38, langsam	PV10 2A gG	OEZ	91.230.034	2	/11.1
-SQ3	Koncový spínač - 1NC+1NO, M20, pomalý Limit switch - 1NC+1NO, M20, slow Endschalter -1NC+1NO, M20, langsam	D4N-4A32	OMRON	91.173.010	1	/15.5
-SQ1	Koncový spínač - 1NO + 1NC, kladka, pomalá akce Limit switch - 1NO + 1NC, pulley, slow action Endschalter - 1NO + 1NC, rolle, langsame Einwirkung	FR 605-M2	PIZZATO	91.173.009	1	/15.3
-SQ2	Koncový spínač - 1NO + 1NC, kladka, pomalá akce Limit switch - 1NO + 1NC, pulley, slow action Endschalter - 1NO + 1NC, rolle, langsame Einwirkung	FR 605-M2	PIZZATO	91.173.009	1	/15.4
-SQ5	Koncový spínač - 1NO + 1NC Limit switch - 1NO + 1NC Endschalter - 1NO + 1NC	FR 555-M2	PIZZATO	91.173.018	1	/16.2
-SQ6	Koncový spínač - 1NO + 1NC Limit switch - 1NO + 1NC Endschalter - 1NO + 1NC	FR 555-M2	PIZZATO	91.173.018	1	/16.3
-SQ9	Koncový spínač - 1NO + 1NC, kladka, pomalá akce Limit switch - 1NO + 1NC, pulley, slow action Endschalter - 1NO + 1NC, rolle, langsame Einwirkung	FR 605-M2	PIZZATO	91.173.009	1	/16.6
-FM1	Frekvenční měnič - 5.5kW, 3x400VAC Frequency converter - 5.5kW, 3x400VAC Frequenzumrichter - 5.5kW, 3x400VAC	VFD13AME43AFNAA	DELTA ELECTRONICS, INC.	91.012.192	1	/9.4
-FM2	Frekvenční měnič - 0.4kW, 3x400VAC Frequency converter - 0.4kWkW, 3x400VAC Frequenzumrichter - 0.4kWkW, 3x400VAC	VFD1A5ME43AFSAA	DELTA ELECTRONICS, INC.	91.012.217	1	/10.2
-BM10.10	Bezpečnostní spínací přístroj Safety switch Sicherheitsschalter	SICK.1085343	SICK	91.051.071	1	/19.6

The manufacturer reserves right to use an equivalent replacement device.

3.e

Kusovník artiklů / Parts list / Stückliste

Označení přístroje Device identification Geräteidentifikation	Typ přístroje Device description Gerätebeschreibung	Objednací číslo Type number Typennummer	Výrobce Manufacturer Hersteller	Skladové číslo Part number Lagernummer	Množství Quantity Menge	Umístění Location Stelle
-SQ7	Induktivní senzor - 2mm, NO, 24V DC, 200mA, M8 Inductive sensor - 2mm NO, 24VDC, 200 mA, M8 Induktive Sensor - 2mm NO, 24VDC, 200 mA, M8	IME08-02BPSZT0S	SICK	91.172.033	1	/16.4
-SQ8	Induktivní senzor - 2mm, NO, 24V DC, 200mA, M8 Inductive sensor - 2mm NO, 24VDC, 200 mA, M8 Induktive Sensor - 2mm NO, 24VDC, 200 mA, M8	IME08-02BPSZT0S	SICK	91.172.033	1	/16.5
-SZ10.10A	Vícepaprsková bezpečnostní světelná závora - přijímač Safety multi-beam light curtain - receiver Sicherheits-Mehrstrahl -Lichtvorhang - Empfänger	M40E-025030RR0	SICK	91.401.009	1	/19.3
-SZ10.10A	Kabel s přímým konektorem M12, 8pin Cable with straight connector M12, 8pin Kabel mit geradem Stecker M12, 8pin	DOL-127SG15ME25KM0	SICK	91.142.015	1	/19.3
-SZ10.10B	Vícepaprsková bezpečnostní světelná závora - vysílač Safety multi-beam light curtain - transmitter Sicherheits-Mehrstrahl -Lichtvorhang- Sender	M40S-025010AR0	SICK	91.401.008	1	/19.0
-SZ10.10B	Kabel s přímým konektorem M12, 8pin Cable with straight connector M12, 8pin Kabel mit geradem Stecker M12, 8pin	DOL-127SG15ME25KM0	SICK	91.142.015	1	/19.0
-FU1	Svorka pojistková - koncové čelo Fuse terminal - termination Sicherungsklemme - Abschluss	SKJ - 2.5 RDG	SMS Technology	91.252.123	1	/11.5
-+R1.2	PS 41x89x74mm - šedá PS 41x89x74mm - grey PS 41x89x74mm - grau	Z54	SOS Electronic, spol. s r.o.	91.190.036	1	/21.2
-+R1.3	PS 41x89x74mm - šedá PS 41x89x74mm - grey PS 41x89x74mm - grau	Z54	SOS Electronic, spol. s r.o.	91.190.036	1	/21.5
-+R10.4	PS 41x89x74mm - šedá PS 41x89x74mm - grey PS 41x89x74mm - grau	Z54	SOS Electronic, spol. s r.o.	91.190.036	1	/22.6
-CU1	Konektor Connector Stecker	SH02-5,08	EUROCLAMP	91.144.003	4	/20.0
-CU1	Konektor Connector Stecker	SHM10-5,08	EUROCLAMP	91.144.030	5	/20.0

The manufacturer reserves right to use an equivalent replacement device.

3.f

Kusovník artiklů / Parts list / Stückliste

Označení přístroje Device identification Geräteidentifikation	Typ přístroje Device description Gerätebeschreibung	Objednací číslo Type number Typennummer	Výrobce Manufacturer Hersteller	Skladové číslo Part number Lagernummer	Množství Quantity Menge	Umístění Location Stelle
-CU1	Konektor Connector Stecker	SHM08-5,08	EUROCLAMP	91.144.031	1	/20.0
-CU1	Konektor Connector Stecker	SHM02-5,08	EUROCLAMP	91.144.032	1	/20.0
-ZD1	Konektor Connector Stecker	SHM02-5,08	EUROCLAMP	91.144.032	4	/11.3
-CU1	Řídící obvod Control circuit Die Steuerschaltung	PRO-5.X	Bomar	91.995.221	1	/20.0
-+R1.2	Svorka Clamp Klemmen	WAGO.260-301	WAGO	91.250.008	7	/21.2
-+R1.2	Koncová bočnice End side Endseite	WAGO.260-361	WAGO	91.252.003	1	/21.2
-+R1.3	Svorka Clamp Klemmen	WAGO.260-301	WAGO	91.250.008	7	/21.5
-+R1.3	Koncová bočnice End side Endseite	WAGO.260-361	WAGO	91.252.003	1	/21.5
-+R10.4	Svorka Clamp Klemmen	WAGO.260-301	WAGO	91.250.008	1	/22.6
-+R10.4	Koncová bočnice End side Endseite	WAGO.260-361	WAGO	91.252.003	1	/22.6

The manufacturer reserves right to use an equivalent replacement device.

3.g

BOMAR, s.r.o.
Těžební 1236/1
CZ 627 00, Brno

Stroj/Machine/Maschine: Individual 820.640 (D)GH

Název stránky/Name page/Name seiten: Kusovník artiklů / Parts list / Artikelstückliste

Číslo dok./Doc.No/Anzahl der Dokumente.:	ES-101.438(A)-B1/B2-V7.1	List/Page/Seite: 3.h
Napájení/Power supply/Einspeinsung:	3x400V+PE, 50Hz	
Zpracoval/Processed /Hat verarbeitet:		Listů/Pages/Seiten: 32
Datum/Date/Datum:	13.05.2021	

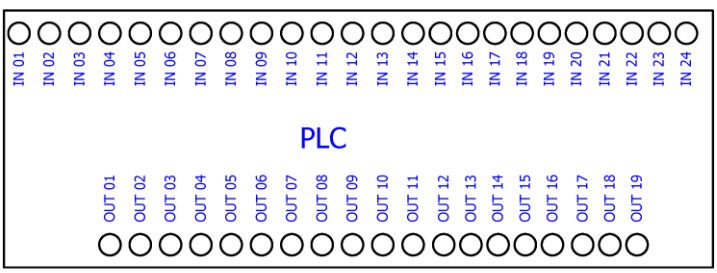

HW	
FW	

Pohled ze spodu/From under view/Blick nach

I/O	CZE	ENG	DE
IN 01	Svěrák upnut	Vice is clamped	Schraubstock ist gespannt
IN 02	Rameno dole	Arm is down	Rahmen ist unten
IN 03	Rameno nahoře	Arm is up	Rahmen ist oben
IN 04	Napnutí pásu	Blade tension	Bandspannung
IN 05	Motory OK	Motors OK	Motoren OK
IN 06	Bezpečnostní okruh uzavřen	Safety circle shut down	Sicherheitsschaltung gesperrt
IN 07	Tlačítko TOTAL STOP	Button TOTAL STOP	Taste TOTAL STOP
IN 08	Tlačítko START	Button START	Taste START
IN 09	Tlačítko STOP	Button STOP	Taste STOP
IN 10	MANUAL	MANUAL	MANUAL
IN 11	CYKLUS	CYCLE	ZYKLUS
IN 12	NC	NC	NC
IN 13	Rameno vlevo	Arm is left	Rahmen ist links
IN 14	Rameno vpravo	Arm is right	Rahmen ist rechts
IN 15	Svěrák vlevo	Vice is left	Vice ist links
IN 16	Svěrák vpravo	Vice is right	Vice ist rechts
IN 17	Rameno horní doraz	Arm upstop	Oberarm Anschlag
IN 18	Svěrák otevřen	Vice is open	Vice ist öffnen
IN 19	Tlačítko napnout pás	Button band tension	Taste band spannen
IN 20	Tlačítko povolit pás	Button band release	Taste band lösen
IN 21	Tlačítko rameno nahoru	Button arm up	Taste Rahmen nach oben
IN 22	Přítlak otevřen	Upper vice is open	Ober Schraubstock ist öffnen
IN 23	Přítlak upnut	Upper vice is clamped	Ober Schraubstock ist gespannt
IN 24	NC	NC	NC
OUT 01+ OUT 01-	Start FM1	Start FM1	Start FM1
OUT 02+ OUT 02-	Natočení - vlevo	Rotate - left	Nach links drehen
OUT 03+ OUT 03-	Natočení - vpravo	Rotate - right	Nach recht drehen
OUT 04	Motor chlazení	Coolant pump	Motor Kühlung
OUT 05	Čerpadlo hydrauliky 1.rychlost	Hydraulic pump 1.speed	Hydraulikpumpe 1.Geschwindigkeit
OUT 06	Čerpadlo hydrauliky 2.rychlost	Hydraulic pump 2.speed	Hydraulikpumpe 2.Geschwindigkeit
OUT 07	Svěrák upnout	Vice clamp	Schraubstock spannen
OUT 08	Svěrák povolit	Release vice	Schraubstock lösen
OUT 09	Svěrák doleva	Vice to the left	Schraubstock nach links
OUT 10	Svěrák doprava	Vice to the right	Schraubstock nach rechts
OUT 11	Rameno nahoru	Arm up	Rahmen nach oben
OUT 12	Rameno dolů	Arm down	Rahmen nach unten
OUT 13	Rameno rychle	Arm fast	Rahmen schnell
OUT 14	Přítlak upnout	Upper vice clamp	Ober Schraubstock spannen
OUT 15	Přítlak povolit	Release upper vice	Ober Schraubstock lösen
OUT 16	Napnout pás	Sawblade tension	Spannen des Sägebandes
OUT 17	Uvolnit pás	Sawblade leave	Entspannen des Sägebandes
OUT 18	Mikronizer	Microniser	Mikronizer
OUT 19	Kontrolka start	Indicator start	Kontrollicht start

BOMAR, s.r.o.
Těžební 1236/1
CZ 627 00, Brno

Stroj/Machine/Maschine:
Individual 820.640 (D)GH

Název stránky/Name page/Name seiten:
I/O řídící systém / I/O Control station / I/O Steuerung

Číslo dok./Doc.No/Anzahl der Dokumente: ES-101.438(A)-B1/B2-V7.1
Napájení/Power supply/Einspeisung: 3x400V+PE, 50Hz
Zpracoval/Processed /hat verarbeitet:
Datum/Date/Datum: 12.05.2021

List/Page/Seite: 4
List(Page/Seiten: 32

Schémata
Schemas
Schematics

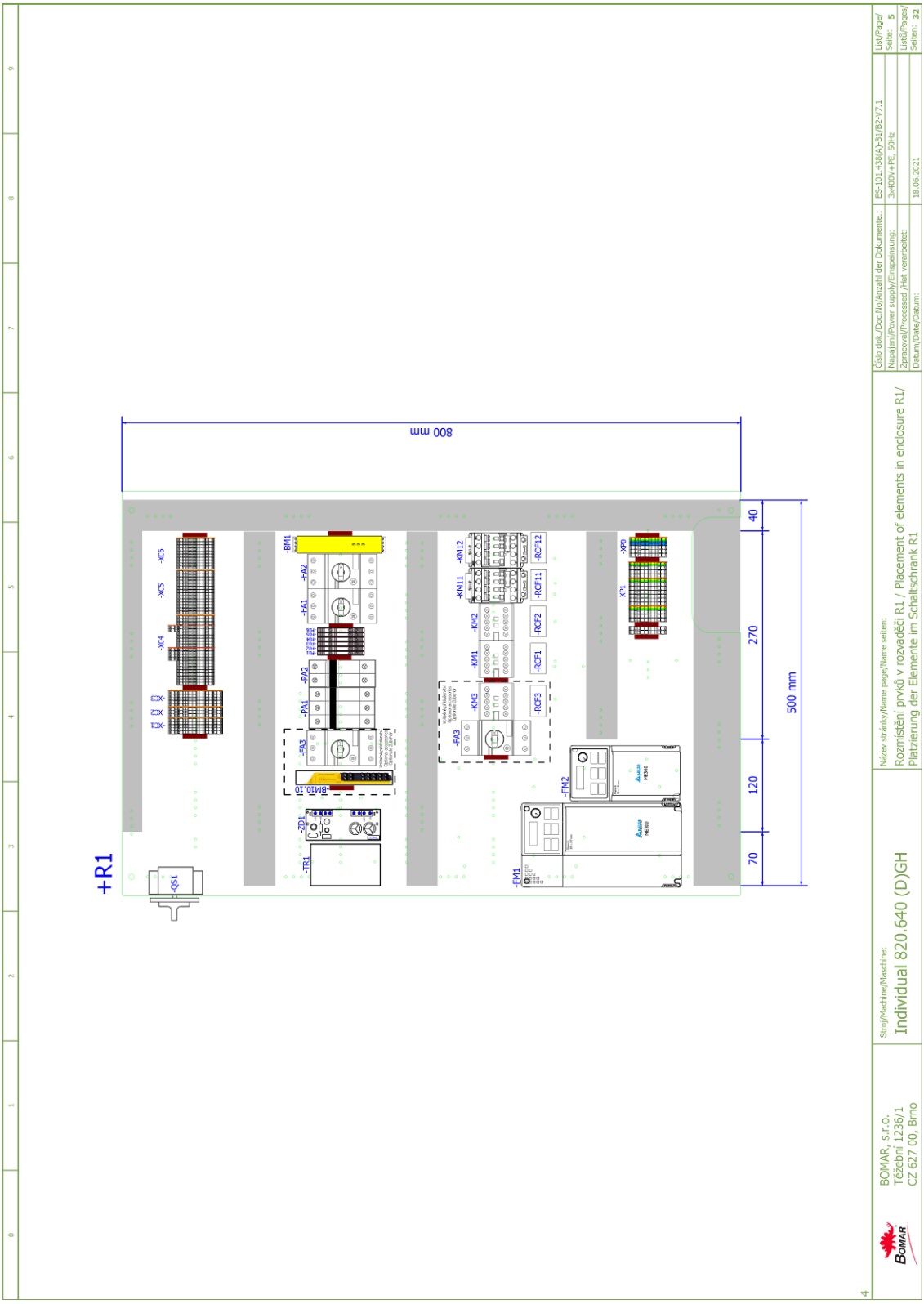
+R1
800 mm
500 mm
70
120
270
40
-QS1
-XC1
-XC2
-XC3
-XC4
-XC5
-XC6
-TR1
-ZD1
-BM10.10
-FA3
-FA2
-FA1
-BM1
-KM3
-KM1
-KM2
-KM11
-KM12
-RCF1
-RCF2
-RCF3
-RCF11
-RCF12
-FM1
-FM2
-XP0
-XP1
Číslo dok./Doc.No/Anzahl der Dokumente:
ES-101.438(A)-B1/B2-V7.1
Napájení/Power supply/Einspeisung:
3x400V+PE, 50Hz
Zpracoval/Processed / Hat verarbeitet:
Datum/Date/Datum:
18.06.2021
List/Page/Seite: 5
Listů/Pages/Seiten: 32
Název stránky/Name page/Name seiten:
Rozmístění prvků v rozváděči R1 / Placement of elements in enclosure R1/
Platzierung der Elemente im Schaltschrank R1
Stroj/Machine/Maschine:
Individual 820.640 (D)GH
BOMAR, s.r.o.
Těžební 1236/1
CZ 627 00, Brno
BOMAR

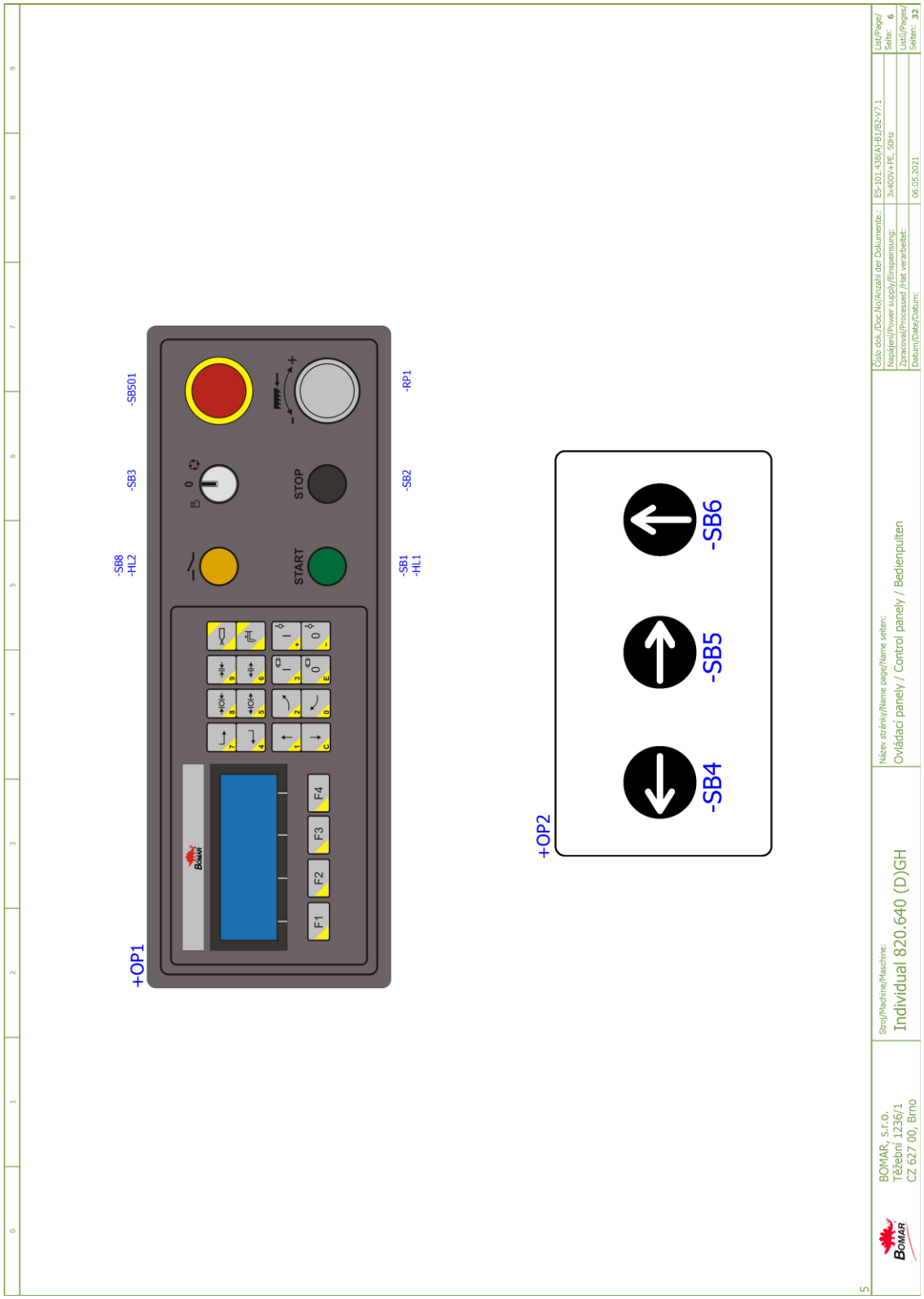
+OP1
-SB8
-HL2
-SB3
-SB501
-SB1
-HL1
-SB2
-RP1
START
STOP
F1
F2
F3
F4
+OP2
-SB4
-SB5
-SB6
BOMAR, s.r.o.
Těžební 1236/1
CZ 627 00, Brno
Stroj/Machine/Maschine:
Individual 820.640 (D)GH
Název stránky/Name page/Name seiten:
Ovládací panely / Control panely / Bedienpulten
Číslo dok./Doc.No/Anzahl der Dokumente.:
ES-101.438(A)-B1/B2-V7.1
Napájení/Power supply/Einspeisung:
3x400V+PE, 50Hz
Zpracoval/Processed /Hat verarbeitet:
Datum/Date/Datum:
06.05.2021
List/Page/
Seite: 6
List/Pages/
Seiten: 32
5

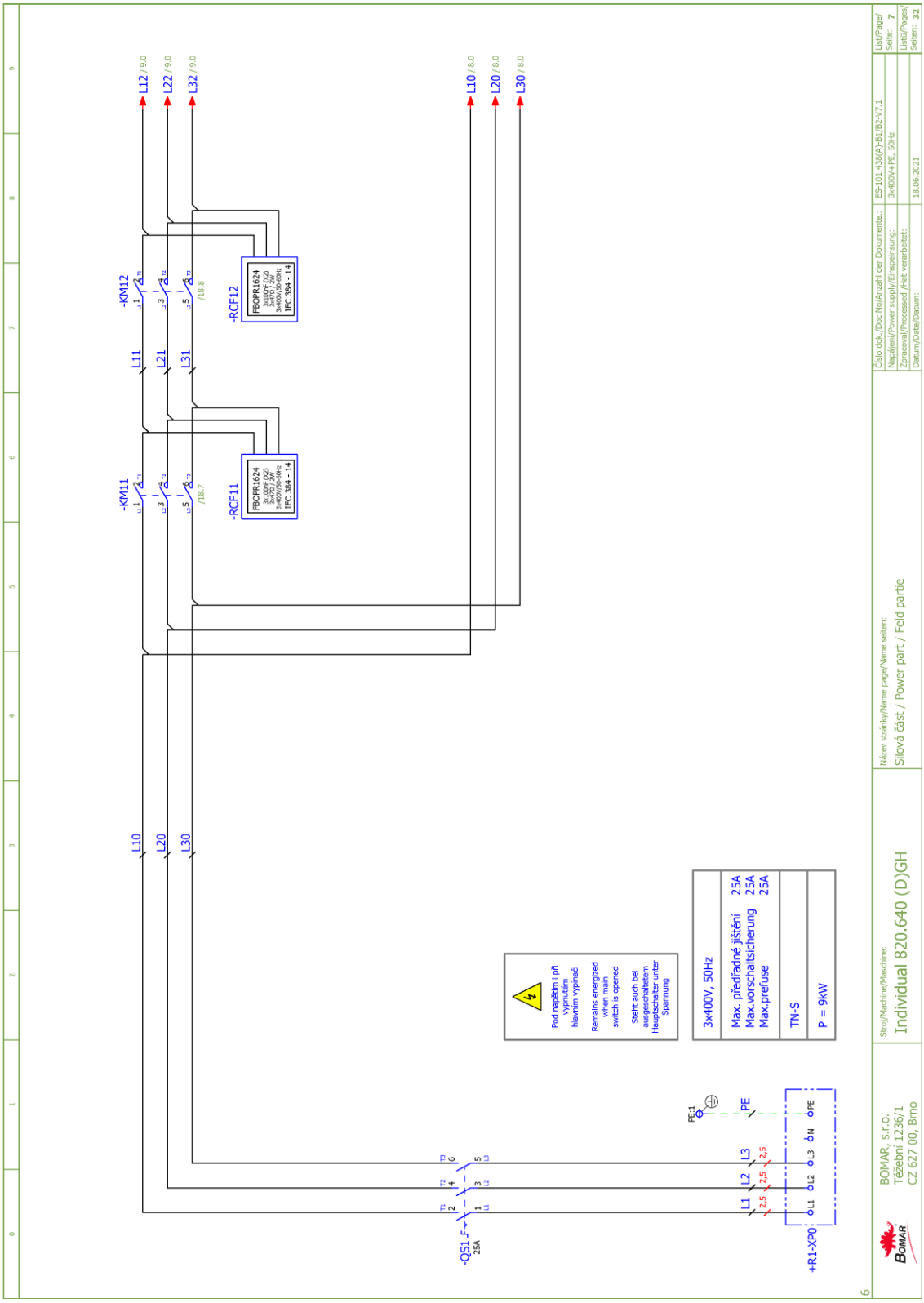
L12 / 9.0
L22 / 9.0
L32 / 9.0
L10 / 8.0
L20 / 8.0
L30 / 8.0
-KM12
-KM11
L11
L21
L31
/18.8
/18.7
-RCF12
-RCF11
FBOPR1624
3x100mA (X2)
3x400V/50-60Hz
IEC 384 - 14
L10
L20
L30
Pod napětím i při vypnutém hlavním vypínači
Remains energized when main switch is opened
Steht auch bei ausgeschaltetem Hauptschalter unter Spannung
3x400V, 50Hz
Max. předřadné jištění 25A
Max.vorschaltsicherung 25A
Max.prefuse 25A
TN-S
P = 9kW
PE:1
PE
L3
L2
L1
2,5
-QS1
25A
+R1-XP0
Číslo dok./Doc.No/Anzahl der Dokumente: ES-101.438(A)-B1/B2-V7.1
Napájení/Power supply/Einspeisung: 3x400V+PE, 50Hz
Zpracoval/Processed /Hat verarbeitet:
Datum/Date/Datum: 18.06.2021
List/Page/ Seite: 7
List(i)/Page(s)/ Seiten: 32
Název stránky/Name page/Name seiten:
Silová část / Power part / Feld partie
Stroj/Machine/Maschine:
Individual 820.640 (D)GH
BOMAR, s.r.o.
Těžební 1236/1
CZ 627 00, Brno
6

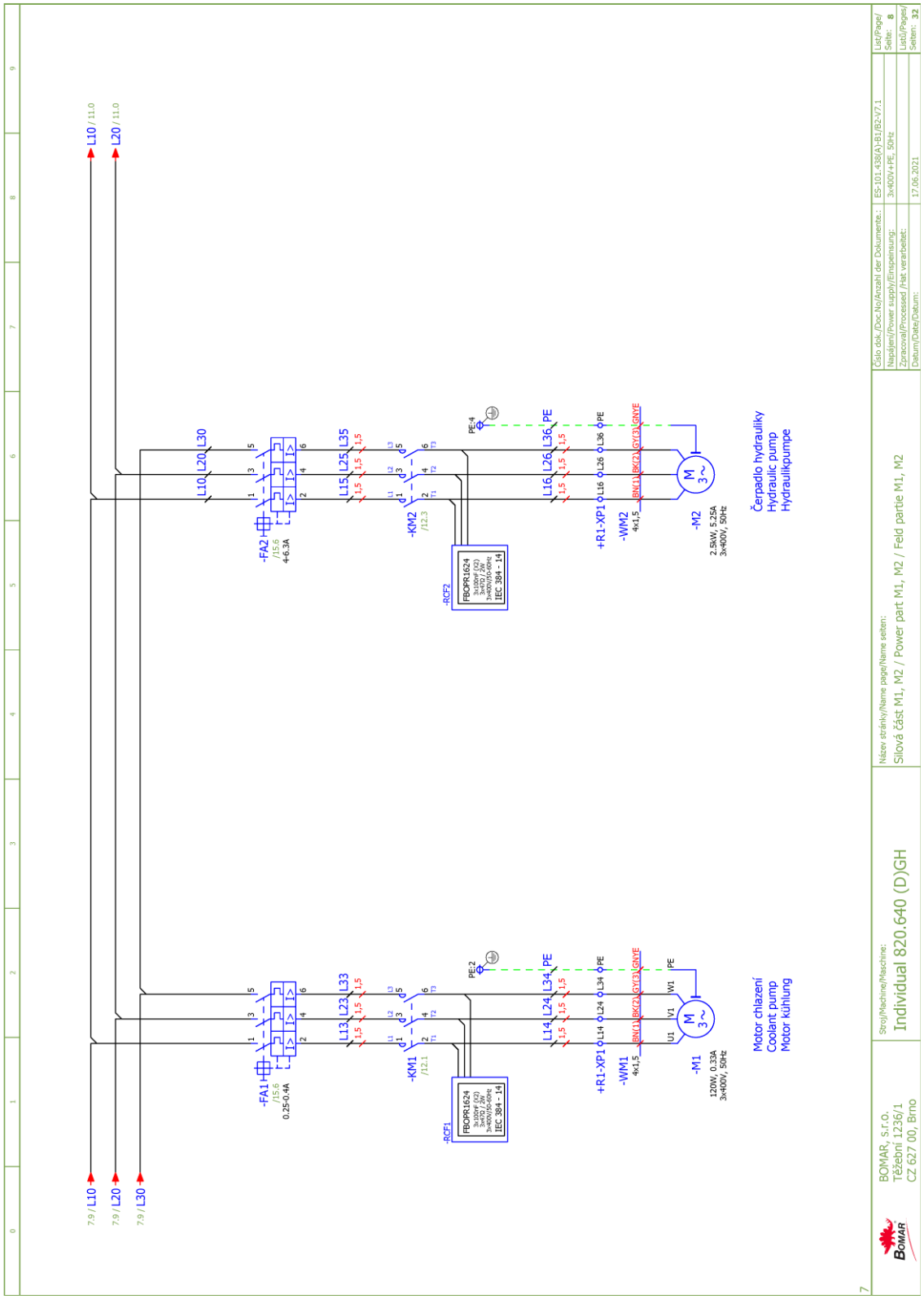
L10 / 11.0
L20 / 11.0
7.9 / L10
7.9 / L20
7.9 / L30
-FA1
/15.6
0.25-0.4A
-FA2
/15.6
4-6.3A
L13 L23 L33
L15 L25 L35
-KM1
/12.1
-KM2
/12.3
-RCF1
-RCF2
FBOPR1624
3x300mA (Q)
3x400V/50-60Hz
IEC 384 - 14
PE:2
PE:4
L14 L24 L34 PE
L16 L26 L36 PE
+R1-XP1
-WM1
-WM2
4x1,5
BN(1) BK(2) GY(3) GN/YE
-M1
120W, 0.33A
3x400V, 50Hz
-M2
2.5kW, 5.25A
3x400V, 50Hz
Motor chlazení
Coolant pump
Motor kühlung
Čerpadlo hydrauliky
Hydraulic pump
Hydraulikpumpe
BOMAR, s.r.o.
Těžební 1236/1
CZ 627 00, Brno
Stroj/Machine/Maschine:
Individual 820.640 (D)GH
Název stránky/Name page/Name seiten:
Silová část M1, M2 / Power part M1, M2 / Feld partie M1, M2
Číslo dok./Doc.No/Anzahl der Dokumente.:
ES-101.438(A)-B1/B2-V7.1
Napájení/Power supply/Einspeisung:
3x400V+PE, 50Hz
Zpracoval/Processed /hat verarbeitet:
Datum/Date/Datum:
17.06.2021
List/Page/
Seite: 8
List/Pages/
Seiten: 32

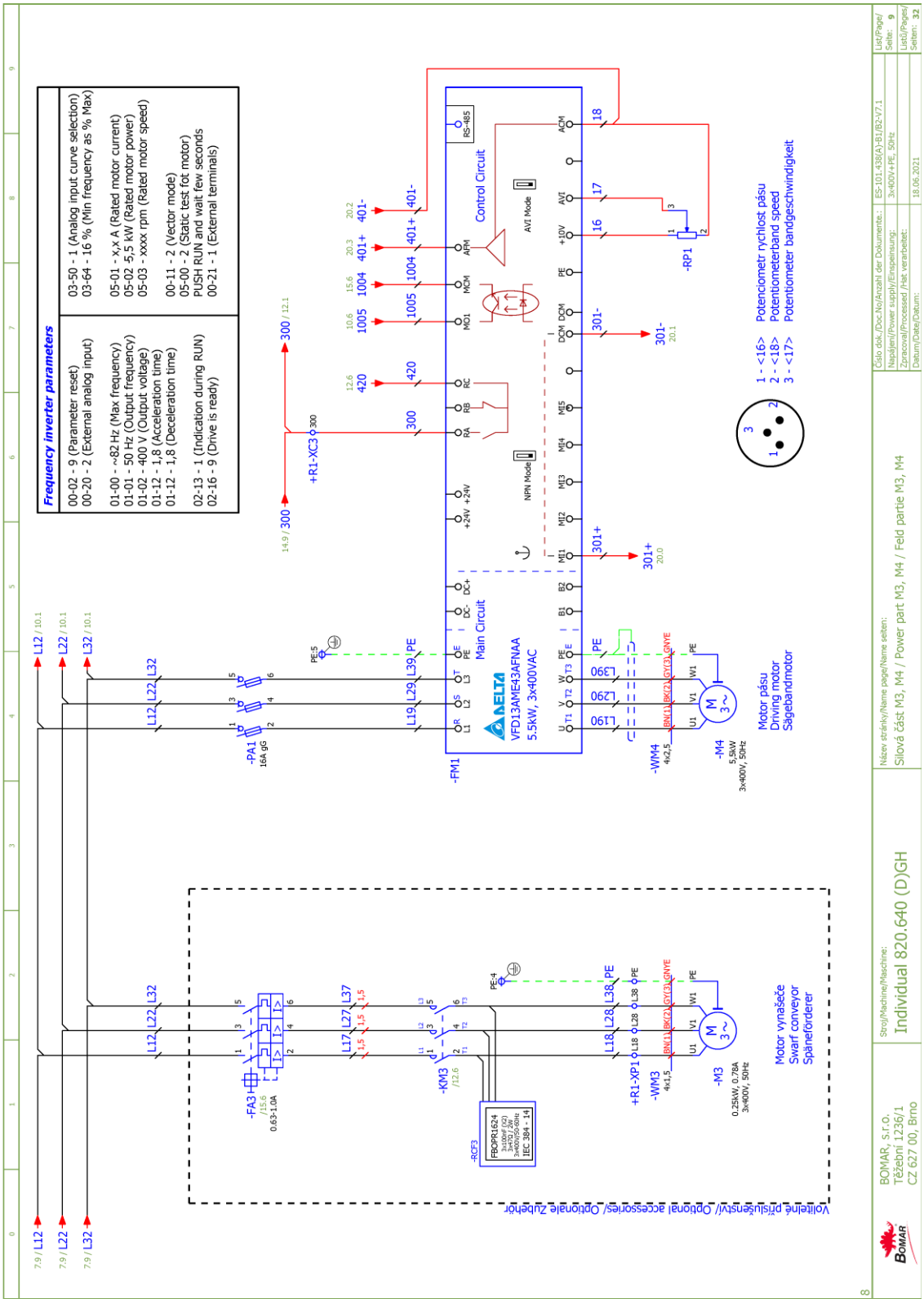
Frequency inverter parameters
00-02 - 9 (Parameter reset)
00-20 - 2 (External analog input)
01-00 - ~82 Hz (Max frequency)
01-01 - 50 Hz (Output frequency)
01-02 - 400 V (Output voltage)
01-12 - 1,8 (Acceleration time)
01-12 - 1,8 (Deceleration time)
02-13 - 1 (Indication during RUN)
02-16 - 9 (Drive is ready)
03-50 - 1 (Analog input curve selection)
03-64 - 16 % (Min frequency as % Max)
05-01 - x,x A (Rated motor current)
05-02 5,5 kW (Rated motor power)
05-03 - xxxx rpm (Rated motor speed)
00-11 - 2 (Vector mode)
05-00 - 2 (Static test fór motor)
PUSH RUN and wait few seconds
00-21 - 1 (External terminals)
-FM1
DELTA
VFD13AME43AFNAA
5,5kW, 3x400VAC
Main Circuit
Control Circuit
RS-485
AVI Mode
NPN Mode
-PA1
16A gG
-FA3
0,63-1,0A
-KM3
-RCF3
FBOPR1624
-WM4
4x2,5
-M4
5,5kW
3x400V, 50Hz
Motor pásu
Driving motor
Sägebandmotor
-WM3
4x1,5
-M3
0,25kW, 0,78A
3x400V, 50Hz
Motor vynašeče
Swarf conveyor
Späneförderer
+R1-XC3
+R1-XP1
-RP1
1 - <16> Potenciometr rychlost pásu
2 - <18> Potentiometerband speed
3 - <17> Potentiometer bandgeschwindigkeit
Volitelné příslušenství/ Optional accessories/ Optionale Zubehör
BOMAR, s.r.o.
Těžební 1236/1
CZ 627 00, Brno
Stroj/Machine/Maschine:
Individual 820.640 (D)GH
Název stránky/Name page/Name seiten:
Silová část M3, M4 / Power part M3, M4 / Feld partie M3, M4
Číslo dok./Doc.No/Anzahl der Dokumente:
ES-101.438(A)-B1/B2-V7.1
Napájení/Power supply/Einspeisung:
3x400V+PE, 50Hz
Zpracoval/Processed /Hat verarbeitet:
Datum/Date/Datum:
18.06.2021
List/Page/Seite: 9
List(s)/Pages/Seiten: 32

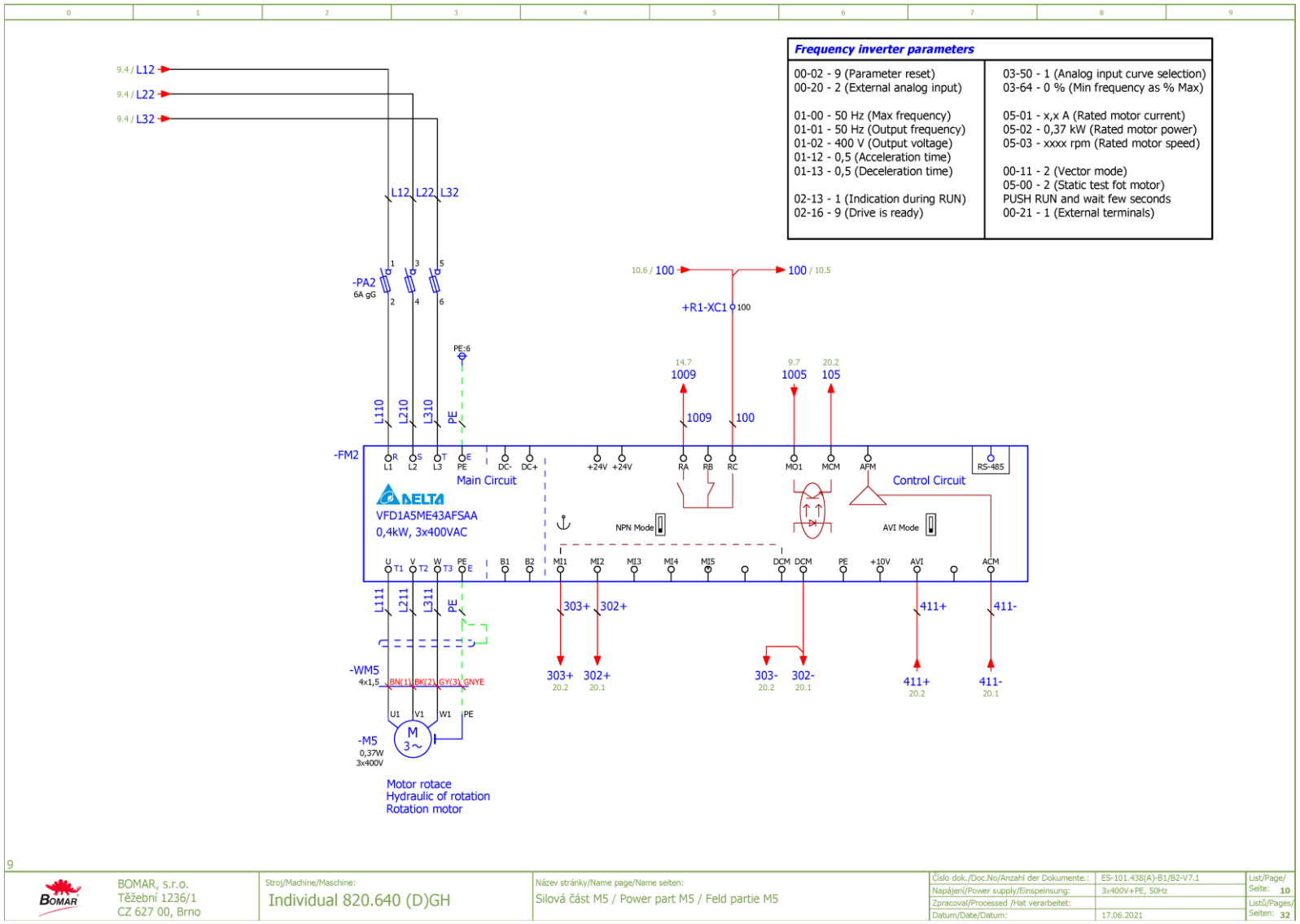

BOMAR, s.r.o. Těžební 1236/1 CZ 627 00, Brno	Stroj/Machine/Maschine: Individual 820.640 (D)GH	Název stránky/Name page/Name seiten: Silová část M5 / Power part M5 / Feld partie M5	Číslo dok./Doc.No/Anzahl der Dokumente.: ES-101.438(A)-B1/B2-V7.1	List/Page/Seite: 10
			Napájení/Power supply/Einspeinsung: 3x400V+PE, 50Hz	Listů/Pages/Seiten: 32
			Zpracoval/Processed /Hat verarbeitet:	
			Datum/Date/Datum: 17.06.2021	

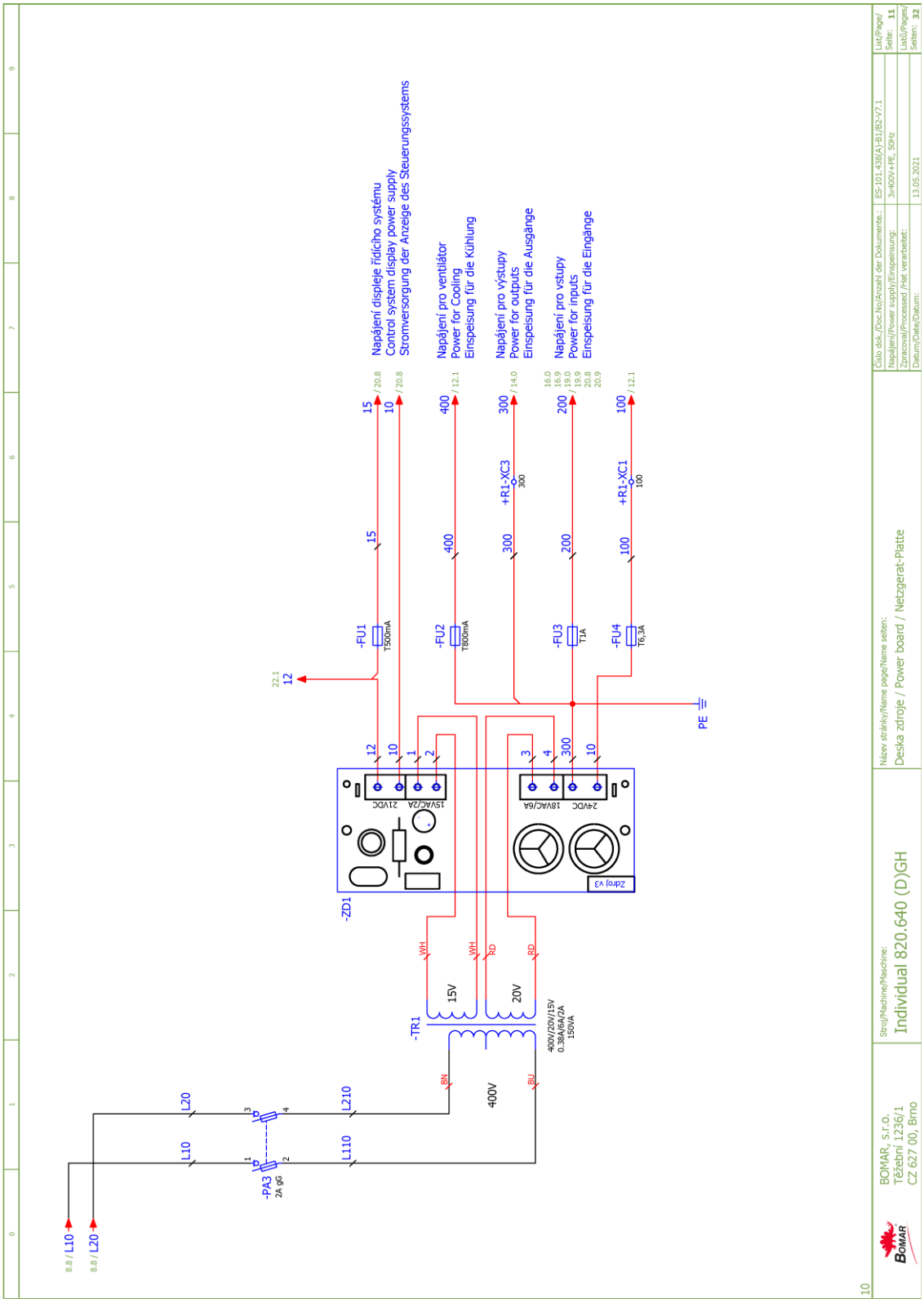
Napájení displeje řídicího systému
Control system display power supply
Stromversorgung der Anzeige des Steuerungssystems
Napájení pro ventilátor
Power for Cooling
Einspeisung für die Kühlung
Napájení pro výstupy
Power for outputs
Einspeisung für die Ausgänge
Napájení pro vstupy
Power for inputs
Einspeisung für die Eingänge
-FU1 T500mA
-FU2 T800mA
-FU3 T1A
-FU4 T6,3A
+R1-XC3
+R1-XC1
-ZD1
Zdroj v3
21VDC
15VAC/2A
18VAC/6A
24VDC
-TR1
400V/20V/15V
0.36A/6A/2A
1500VA
-PA3
2A gG
L10
L20
L110
L210
PE
Číslo dok./Doc.No/Anzahl der Dokumente:
ES-101.438(A)-B1/B2-V7.1
Napájení/Power supply/Einspeisung:
3x400V+PE, 50Hz
Zpracoval/Processed /Hat verarbeitet:
Datum/Date/Datum:
13.05.2021
List/Page/Seite: 11
Listů/Pages/Seiten: 32
Název stránky/Name page/Name seiten:
Deska zdroje / Power board / Netzgerät-Platte
Stroj/Machine/Maschine:
Individual 820.640 (D)GH
BOMAR, s.r.o.
Těžební 1236/1
CZ 627 00, Brno

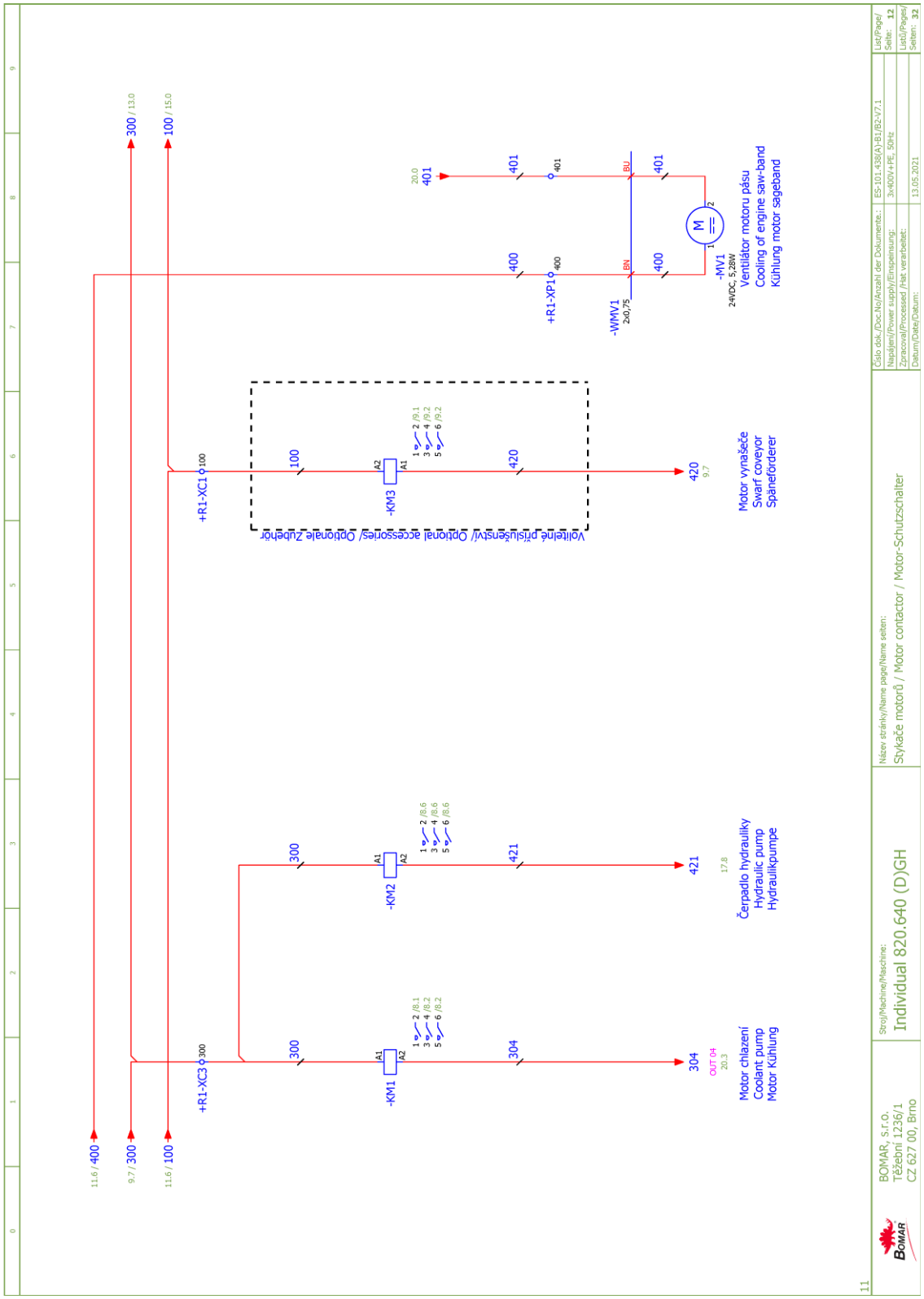
116.6 / 400
9.7 / 300
116.6 / 100
300 / 13.0
100 / 15.0
+R1-XC3 300
+R1-XC1 100
300
300
-KM1
-KM2
304
421
Motor chlazení
Coolant pump
Motor Kühlung
Čerpadlo hydrauliky
Hydraulic pump
Hydraulikpumpe
100
420
-KM3
Volitelné příslušenství/ Optional accessories/ Optionale Zubehör
Motor vynašeče
Swarf coveyor
Späneförderer
400
401
+R1-XP1
-WMV1
2x0,75
-MV1
24VDC, 5,28W
Ventilátor motoru pásu
Cooling of engine saw-band
Kühlung motor sageband
BOMAR, s.r.o.
Těžební 1236/1
CZ 627 00, Brno
Stroj/Machine/Maschine:
Individual 820.640 (D)GH
Název stránky/Name page/Name seiten:
Stykače motorů / Motor contactor / Motor-Schutzschalter
Číslo dok./Doc.No/Anzahl der Dokumente:
ES-101.438(A)-B1/B2-V7.1
Napájení/Power supply/Einspeisung:
3x400V+PE, 50Hz
Zpracoval/Processed /hat verarbeitet:
Datum/Date/Datum:
13.05.2021
List/Page/
Seite: 12
List/Pages/
Seiten: 32

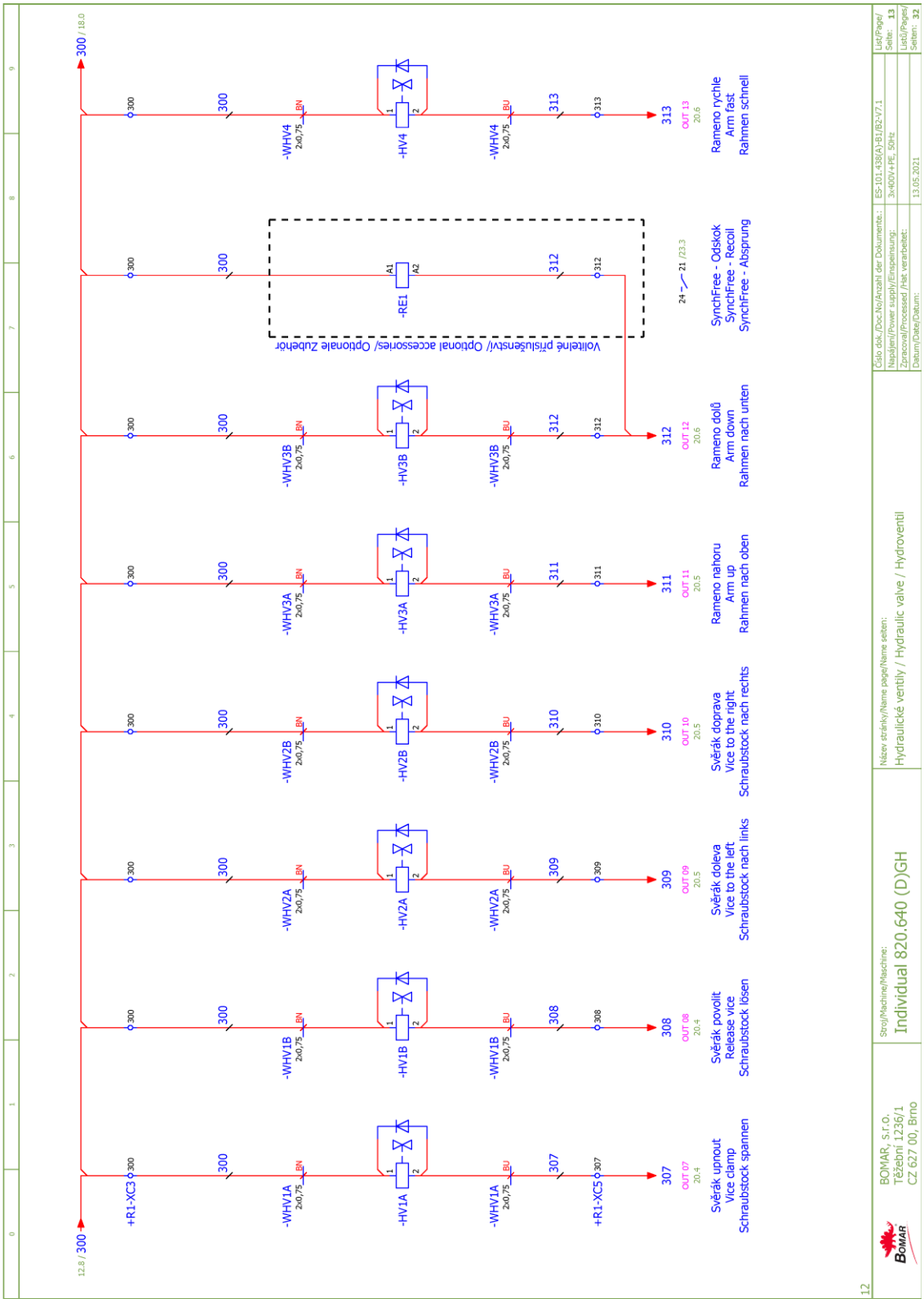
12.8 / 300
300 / 18.0
+R1-XC3
-WHV1A
-HV1A
Svěrák upnout
Vice clamp
Schraubstock spannen
307
OUT 07
20.4
+R1-XC5
-WHV1B
-HV1B
Svěrák povolit
Release vice
Schraubstock lösen
308
OUT 08
20.4
-WHV2A
-HV2A
Svěrák doleva
Vice to the left
Schraubstock nach links
309
OUT 09
20.5
-WHV2B
-HV2B
Svěrák doprava
Vice to the right
Schraubstock nach rechts
310
OUT 10
20.5
-WHV3A
-HV3A
Rameno nahoru
Arm up
Rahmen nach oben
311
OUT 11
20.5
-WHV3B
-HV3B
Rameno dolů
Arm down
Rahmen nach unten
312
OUT 12
20.6
Volitelné příslušenství/ Optional accessories/ Optionale Zubehör
-RE1
A1
A2
24 21 /23.3
SynchFree - Odskok
SynchFree - Recoil
SynchFree - Absprung
-WHV4
-HV4
313
OUT 13
20.6
Rameno rychle
Arm fast
Rahmen schnell
BOMAR, s.r.o.
Těžební 1236/1
CZ 627 00, Brno
Stroj/Machine/Maschine:
Individual 820.640 (D)GH
Název stránky/Name page/Name seiten:
Hydraulické ventily / Hydraulic valve / Hydroventil
Číslo dok./Doc.No/Anzahl der Dokumente:
ES-101.438(A)-B1/B2-V7.1
List/Page/Seite: 13
Napájení/Power supply/Einspeisung:
3x400V+PE, 50Hz
Listů/Pages/Seiten: 32
Zpracoval/Processed /Hat verarbeitet:
Datum/Date/Datum:
13.05.2021
12

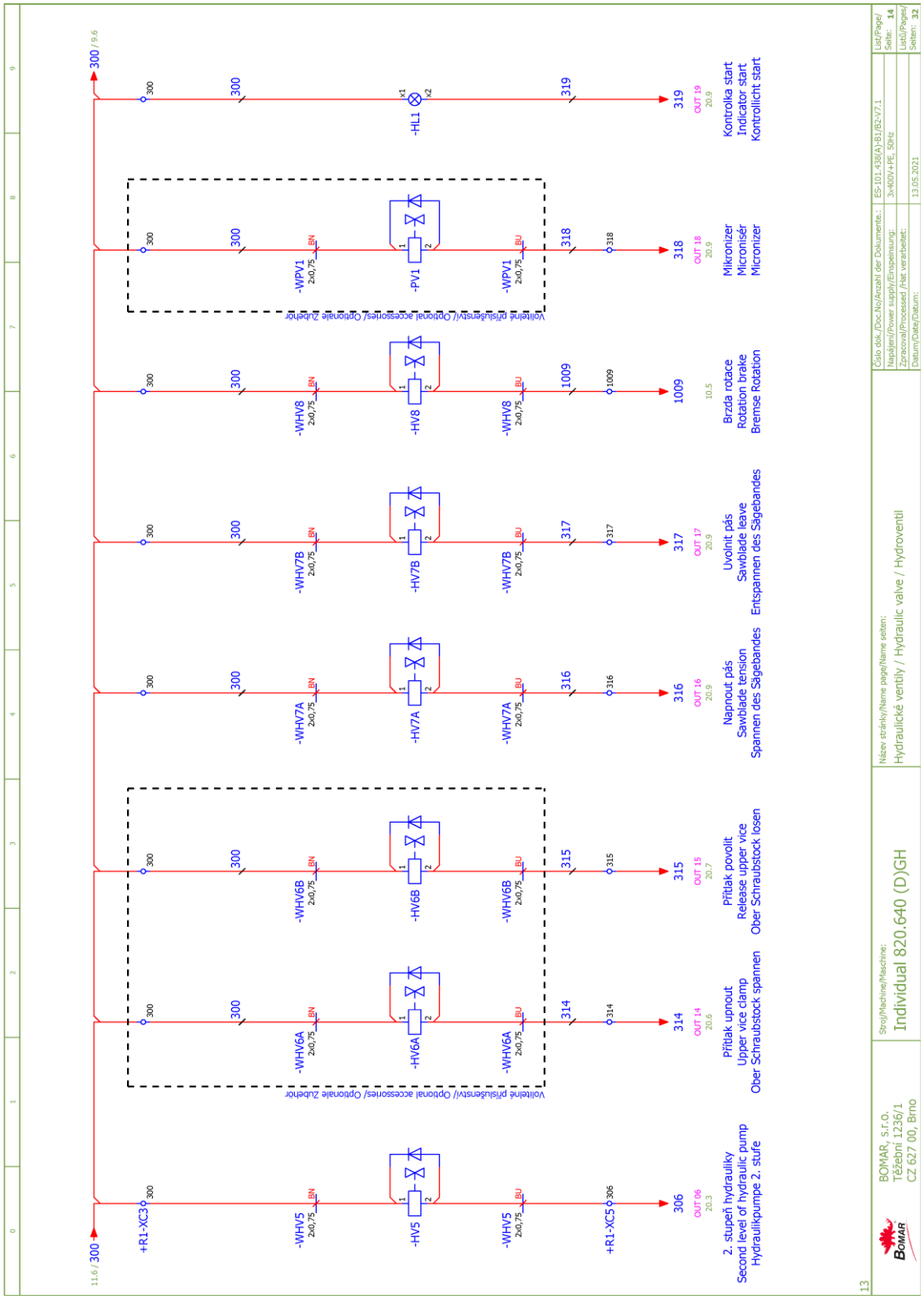
Volitelné příslušenství/ Optional accessories/ Optionale Zubehör
2. stupeň hydrauliky
Second level of hydraulic pump
Hydraulikpumpe 2. stufe
Přítlak upnout
Upper vice clamp
Ober Schraubstock spannen
Přítlak povolit
Release upper vice
Ober Schraubstock losen
Napnout pás
Sawblade tension
Spannen des Sägebandes
Uvolnit pás
Sawblade leave
Entspannen des Sägebandes
Brzda rotace
Rotation brake
Bremse Rotation
Mikronizer
Micronisér
Micronizer
Kontrolka start
Indicator start
Kontrollicht start
BOMAR, s.r.o.
Těžební 1236/1
CZ 627 00, Brno
Individual 820.640 (D)GH
Hydraulické ventily / Hydraulic valve / Hydroventil

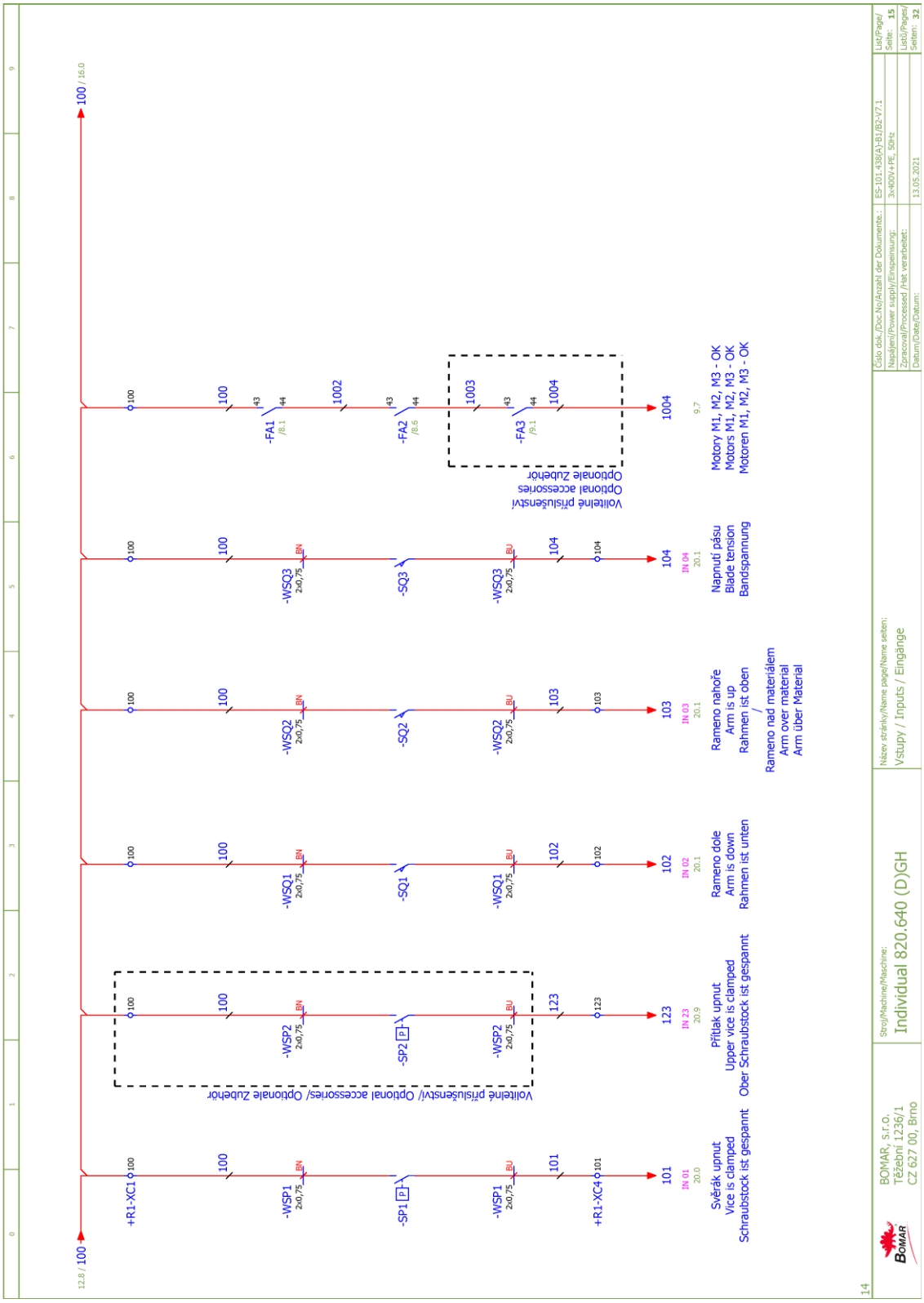
Volitelné příslušenství/ Optional accessories/ Optionale Zubehör
Volitelné příslušenství
Optional accessories
Optionale Zubehör
Svěrák upnut
Vice is clamped
Schraubstock ist gespannt
Přítlak upnut
Upper vice is clamped
Ober Schraubstock ist gespannt
Rameno dole
Arm is down
Rahmen ist unten
Rameno nahoře
Arm is up
Rahmen ist oben
/
Rameno nad materiálem
Arm over material
Arm über Material
Napnutí pásu
Blade tension
Bandspannung
Motory M1, M2, M3 - OK
Motors M1, M2, M3 - OK
Motoren M1, M2, M3 - OK
BOMAR, s.r.o.
Těžební 1236/1
CZ 627 00, Brno
Stroj/Machine/Maschine:
Individual 820.640 (D)GH
Název stránky/Name page/Name seiten:
Vstupy / Inputs / Eingänge
Číslo dok./Doc.No/Anzahl der Dokumente:
ES-101.438(A)-B1/B2-V7.1
Napájení/Power supply/Einspeisung:
3x400V+PE, 50Hz
Zpracoval/Processed /Hat verarbeitet:
Datum/Date/Datum:
13.05.2021
List/Page/
Seite: 15
Listů/Pages/
Seiten: 32
14

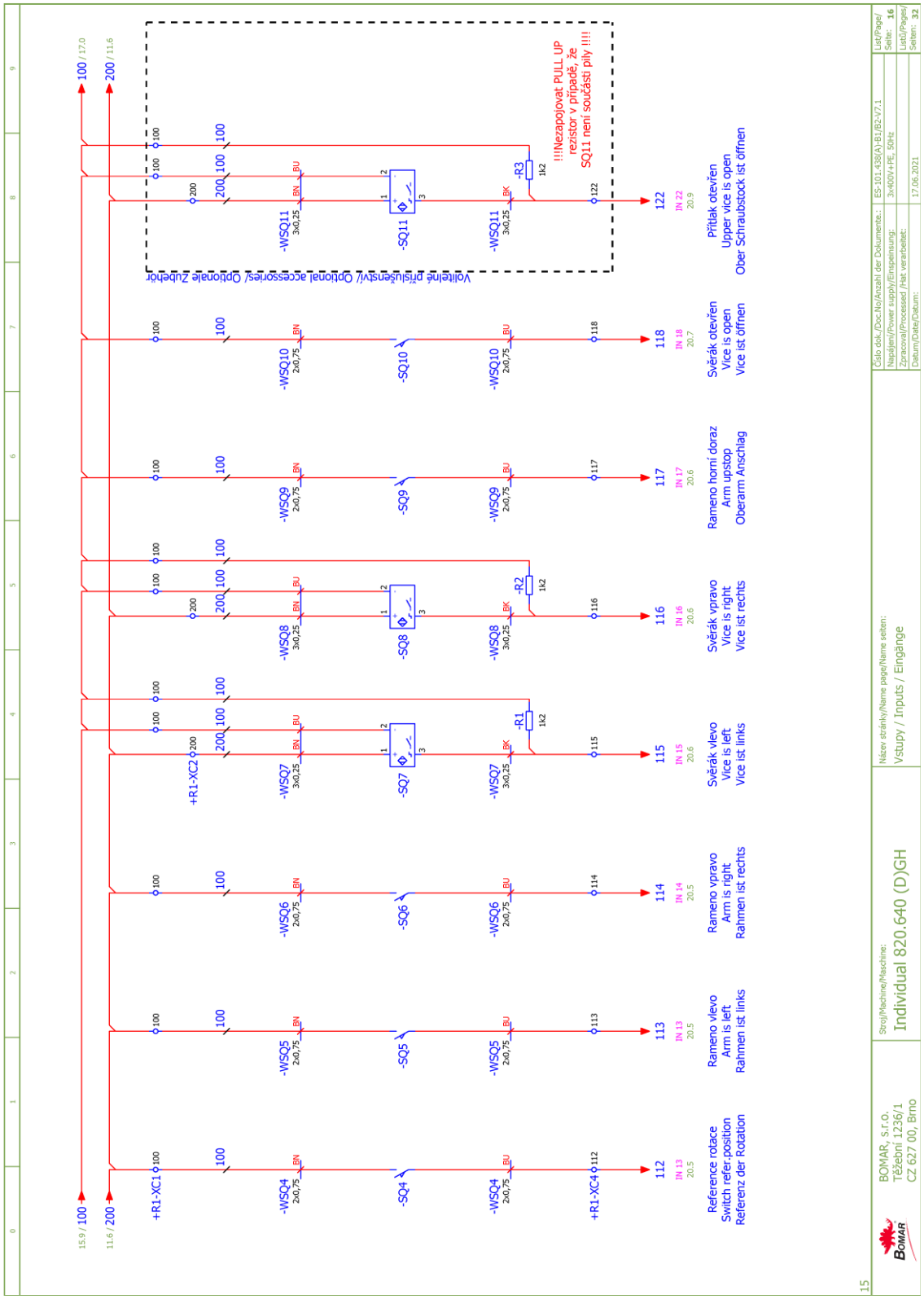
Volitelné příslušenství/ Optional accessories/ Optionale Zubehör
!!!Nezapojovat PULL UP rezistor v případě, že SQ11 není součástí pily !!!!
Reference rotace
Switch refer.position
Referenz der Rotation
Rameno vlevo
Arm is left
Rahmen ist links
Rameno vpravo
Arm is right
Rahmen ist rechts
Svěrák vlevo
Vice is left
Vice ist links
Svěrák vpravo
Vice is right
Vice ist rechts
Rameno horní doraz
Arm upstop
Oberarm Anschlag
Svěrák otevřen
Vice is open
Vice ist öffnen
Přítlak otevřen
Upper vice is open
Ober Schraubstock ist öffnen
BOMAR, s.r.o.
Těžební 1236/1
CZ 627 00, Brno
Individual 820.640 (D)GH
Vstupy / Inputs / Eingänge

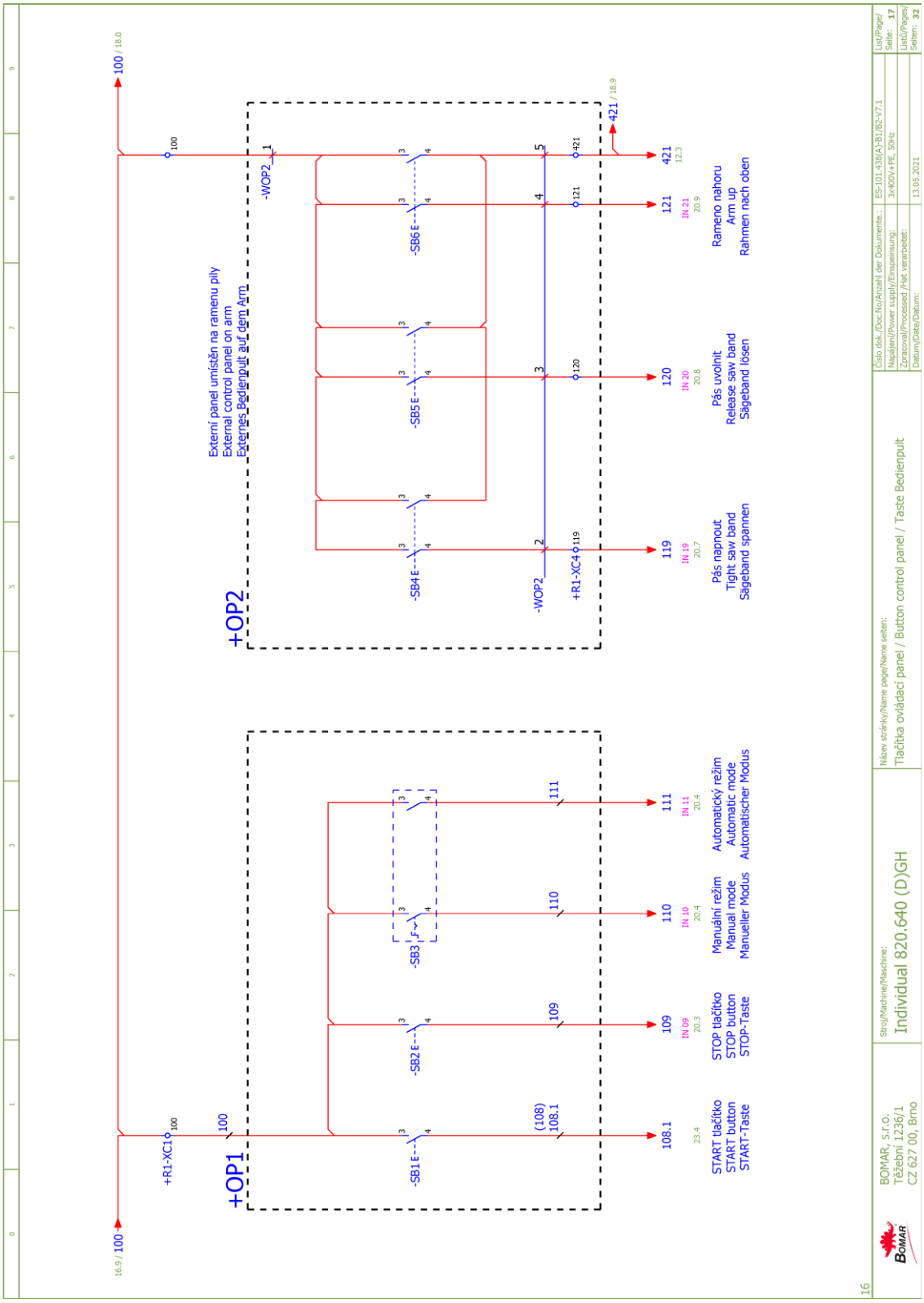
+OP1
+OP2
Externí panel umístěn na ramenu pily
External control panel on arm
Externes Bedienpult auf dem Arm
START tlačítko
START button
START-Taste
STOP tlačítko
STOP button
STOP-Taste
Manuální režim
Manual mode
Manueller Modus
Automatický režim
Automatic mode
Automatischer Modus
Pás napnout
Tight saw band
Sägeband spannen
Pás uvolnit
Release saw band
Sägeband lösen
Rameno nahoru
Arm up
Rahmen nach oben
BOMAR, s.r.o.
Těžební 1236/1
CZ 627 00, Brno
Individual 820.640 (D)GH
Tlačítka ovládací panel / Button control panel / Taste Bedienpult

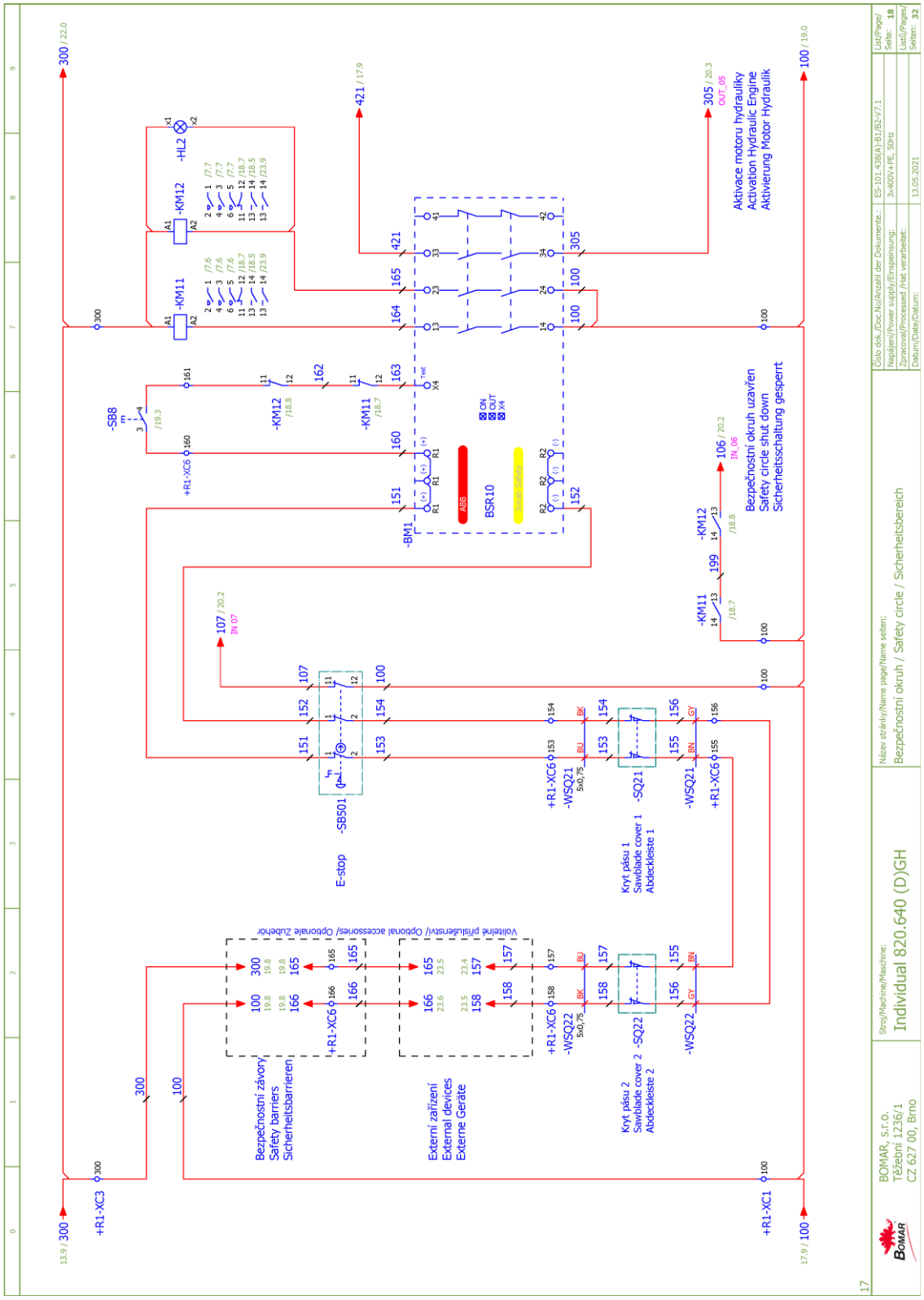
Bezpečnostní okruh uzavřen
Safety circle shut down
Sicherheitsschaltung gesperrt
Aktivace motoru hydrauliky
Activation Hydraulic Engine
Aktivierung Motor Hydraulik
Bezpečnostní závory
Safety barriers
Sicherheitsbarrieren
Externí zařízení
External devices
Externe Geräte
Volitelné příslušenství/ Optional accessories/ Optionale Zubehör
E-stop
Kryt pásu 1
Sawblade cover 1
Abdeckleiste 1
Kryt pásu 2
Sawblade cover 2
Abdeckleiste 2
BOMAR, s.r.o.
Těžební 1236/1
CZ 627 00, Brno
Individual 820.640 (D)GH
Název stránky/Name page/Name seiten:
Bezpečnostní okruh / Safety circle / Sicherheitsbereich

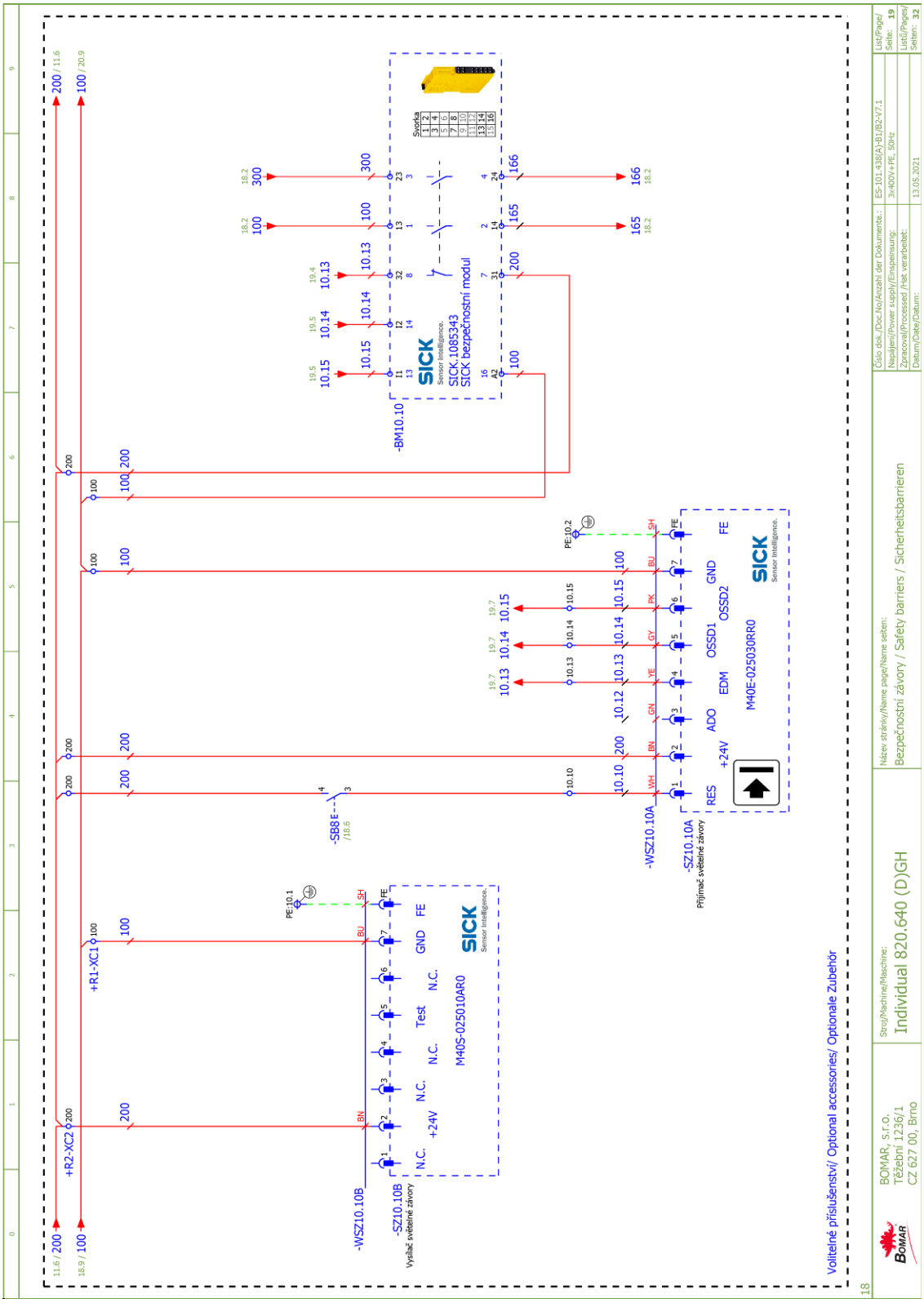
+R2-XC2
+R1-XC1
-WSZ10.10B
-SZ10.10B
Vysílač světelné závory
M40S-025010AR0
SICK
Sensor Intelligence.
-SB8E
-WSZ10.10A
-SZ10.10A
Přijímač světelné závory
M40E-025030RR0
-BM10.10
SICK.1085343
SICK bezpečnostní modul
Svorka
Volitelné příslušenství/ Optional accessories/ Optionale Zubehör
BOMAR, s.r.o.
Těžební 1236/1
CZ 627 00, Brno
Stroj/Machine/Maschine:
Individual 820.640 (D)GH
Název stránky/Name page/Name seiten:
Bezpečnostní závory / Safety barriers / Sicherheitsbarrieren
Číslo dok./Doc.No/Anzahl der Dokumente:
ES-101.438(A)-B1/B2-V7.1
Napájení/Power supply/Einspeisung:
3x400V+PE, 50Hz
Zpracoval/Processed /Hat verarbeitet:
Datum/Date/Datum:
13.05.2021
List/Page/Seite: 19
List(l)/Pages/Seiten: 32

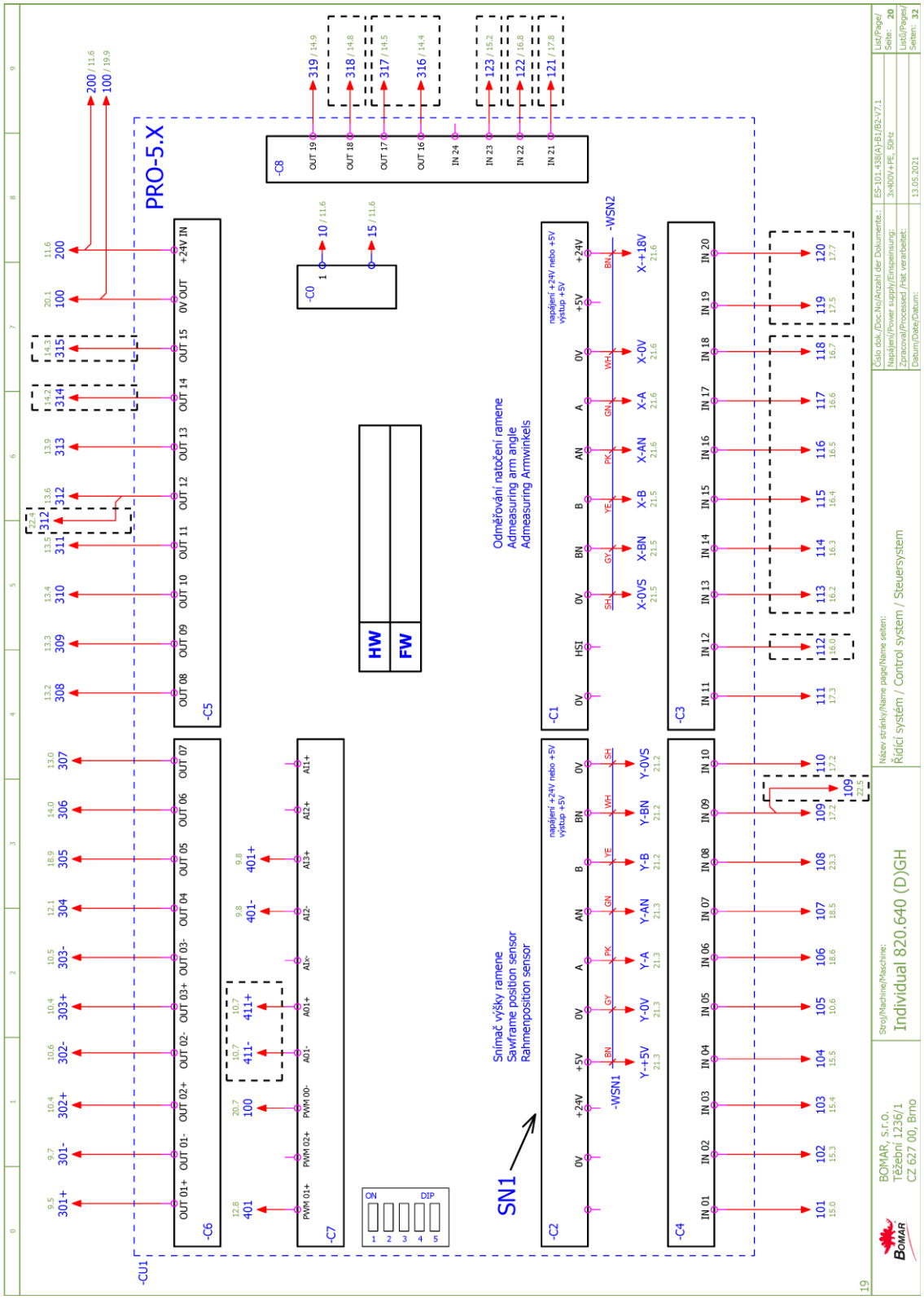
PRO-5.X
-CU1
-C5
-C6
-C7
-C8
-C0
-C1
-C2
-C3
-C4
HW
FW
DIP
ON
SN1
Odměřování natočení ramene
Admeasuring arm angle
Admeasuring Armwinkels
Snímač výšky ramene
Sawframe position sensor
Rahmenposition sensor
napájení +24V nebo +5V
výstup +5V
-WSN1
-WSN2
BOMAR, s.r.o.
Těžební 1236/1
CZ 627 00, Brno
Stroj/Machine/Maschine:
Individual 820.640 (D)GH
Název stránky/Name page/Name seiten:
Řídící systém / Control system / Steuersystem
Číslo dok./Doc.No/Anzahl der Dokumente:
ES-101.438(A)-B1/B2-V7.1
Napájení/Power supply/Einspeisung:
3x400V+PE, 50Hz
Zpracoval/Processed /Hat verarbeitet:
Datum/Date/Datum:
13.05.2021
List/Page/
Seite: 20
List/Pages/
Seiten: 32
19

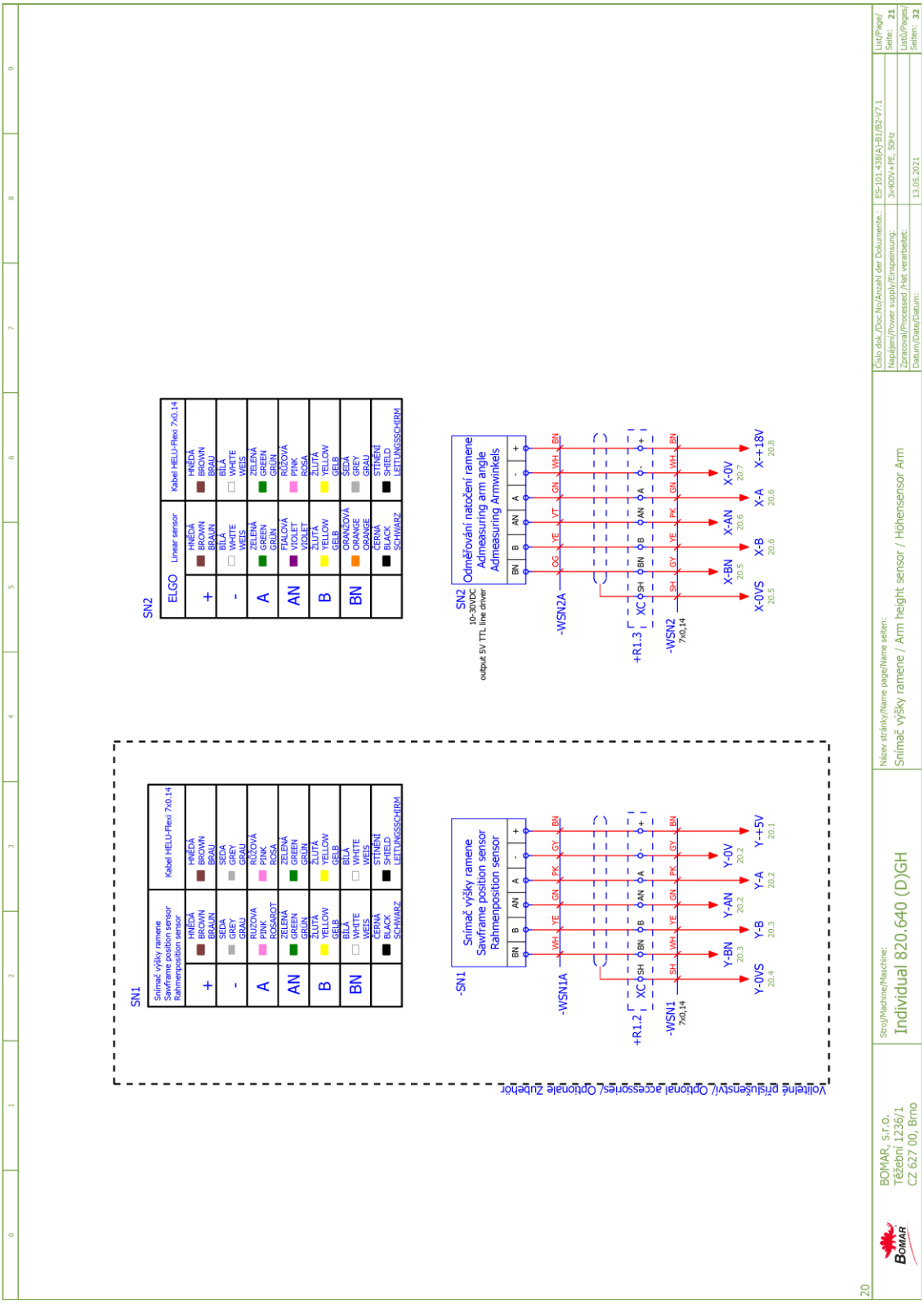
SN1
Snímač výšky ramene
Sawframe position sensor
Rahmenposition sensor
Kabel HELU-Flexi 7x0.14
+ HNĚDÁ BROWN BRAUN
- SEDÁ GREY GRAU
A RŮŽOVÁ PINK ROSSROT
AN ZELENÁ GREEN GRÜN
B ŽLUTÁ YELLOW GELB
BN BÍLÁ WHITE WEIS
STÍNĚNÍ SHIELD LEITUNGSSCHIRM
-SN1
Snímač výšky ramene
Sawframe position sensor
Rahmenposition sensor
BN B AN A - +
-WSN1A
WH YE GN PK GY BN
+R1.2
XC SH BN B AN A - +
-WSN1
7x0,14
SH WH YE GN PK GY BN
Y-0VS 20.4
Y-BN 20.3
Y-B 20.3
Y-AN 20.2
Y-A 20.2
Y-0V 20.2
Y-+5V 20.1
SN2
ELGO
Linear sensor
Kabel HELU-Flexi 7x0.14
+ HNĚDÁ BROWN BRAUN
- BÍLÁ WHITE WEIS
A ZELENÁ GREEN GRÜN
AN FIALOVÁ VIOLET VIOLET
B ŽLUTÁ YELLOW GELB
BN ORANŽOVÁ ORANGE ORANGE
SEDÁ GREY GRAU
STÍNĚNÍ SHIELD LEITUNGSSCHIRM
SN2
10-30VDC
output 5V TTL line driver
Odměřování natočení ramene
Admeasuring arm angle
Admeasuring Armwinkels
BN B AN A - +
-WSN2A
OG YE VT GN WH BN
+R1.3
XC SH BN B AN A - +
-WSN2
7x0,14
SH GY YE PK GN WH BN
X-0VS 20.5
X-BN 20.5
X-B 20.6
X-AN 20.6
X-A 20.6
X-0V 20.7
X-+18V 20.8
Volitelné příslušenství/ Optional accessories/ Optionale Zubehöre
20
BOMAR, s.r.o.
Těžební 1236/1
CZ 627 00, Brno
Stroj/Machine/Maschine:
Individual 820.640 (D)GH
Název stránky/Name page/Name seiten:
Snímač výšky ramene / Arm height sensor / Höhensensor Arm
Číslo dok./Doc.No/Anzahl der Dokumente:
ES-101.438(A)-B1/B2-V7.1
List/Page/Seite: 21
Napájení/Power supply/Einspeisung:
3x400V+PE, 50Hz
Listů/Pages/Seiten: 32
Zpracoval/Processed /Hat verarbeitet:
Datum/Date/Datum:
13.05.2021

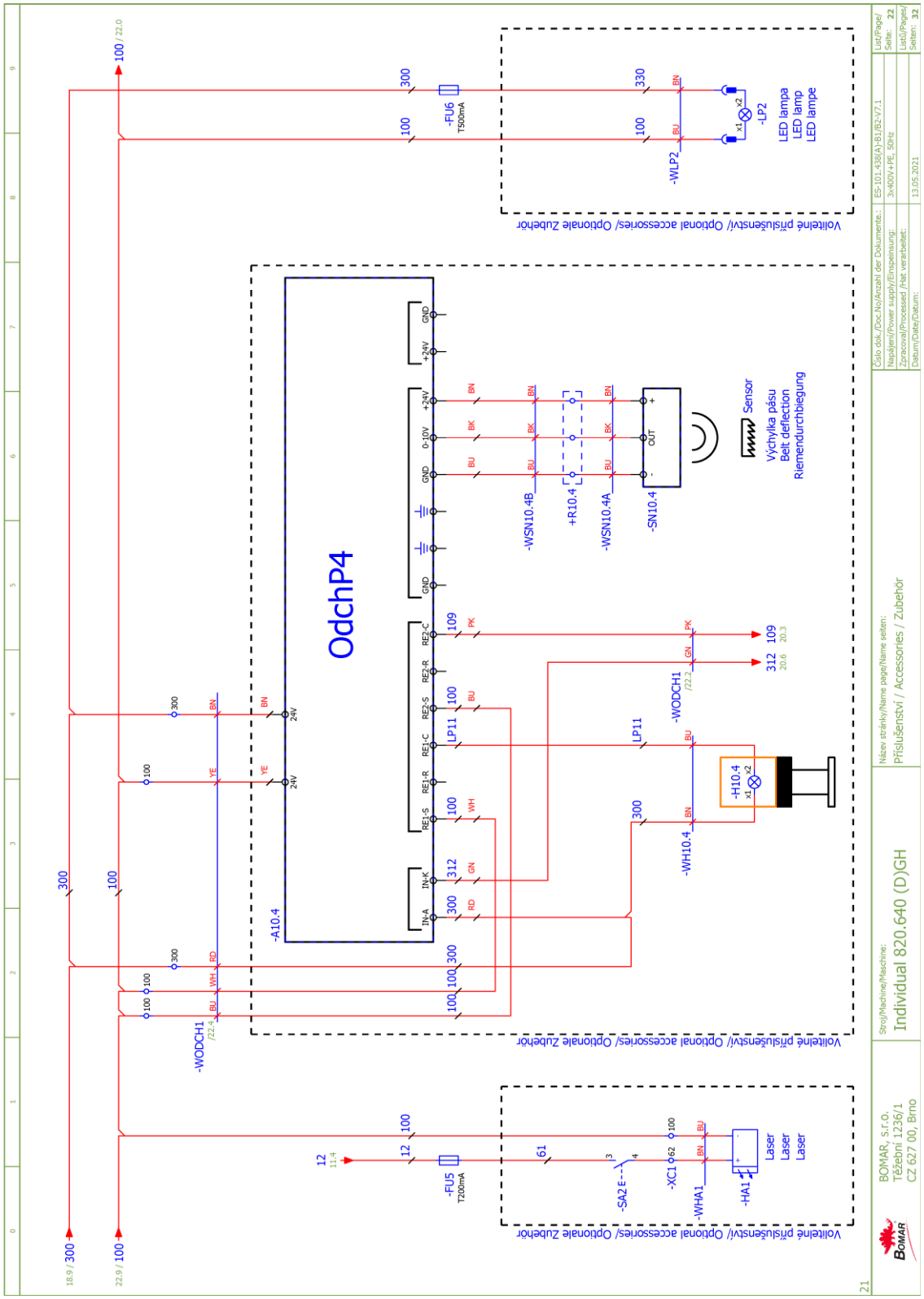
OdchP4
-A10.4
-FU6
T500mA
-LP2
LED lampa
LED lamp
LED lampe
-WLP2
-WSN10.4B
+R10.4
-WSN10.4A
-SN10.4
Sensor
Výchylka pásu
Belt deflection
Riemendurchbiegung
-WODCH1
-WH10.4
-H10.4
-FU5
T200mA
-SA2
-XC1
-WHA1
-HA1
Laser
Volitelné příslušenství/ Optional accessories/ Optionale Zubehör
Číslo dok./Doc.No/Anzahl der Dokumente:
ES-101.438(A)-B1/B2-V7.1
Napájení/Power supply/Einspeisung:
3x400V+PE, 50Hz
Zpracoval/Processed /hat verarbeitet:
Datum/Date/Datum:
13.05.2021
List/Page/Seite: 22
List/Pages/Seiten: 32
Název stránky/Name page/Name seiten:
Příslušenství / Accessories / Zubehör
Stroj/Machine/Maschine:
Individual 820.640 (D)GH
BOMAR, s.r.o.
Těžební 1236/1
CZ 627 00, Brno
21

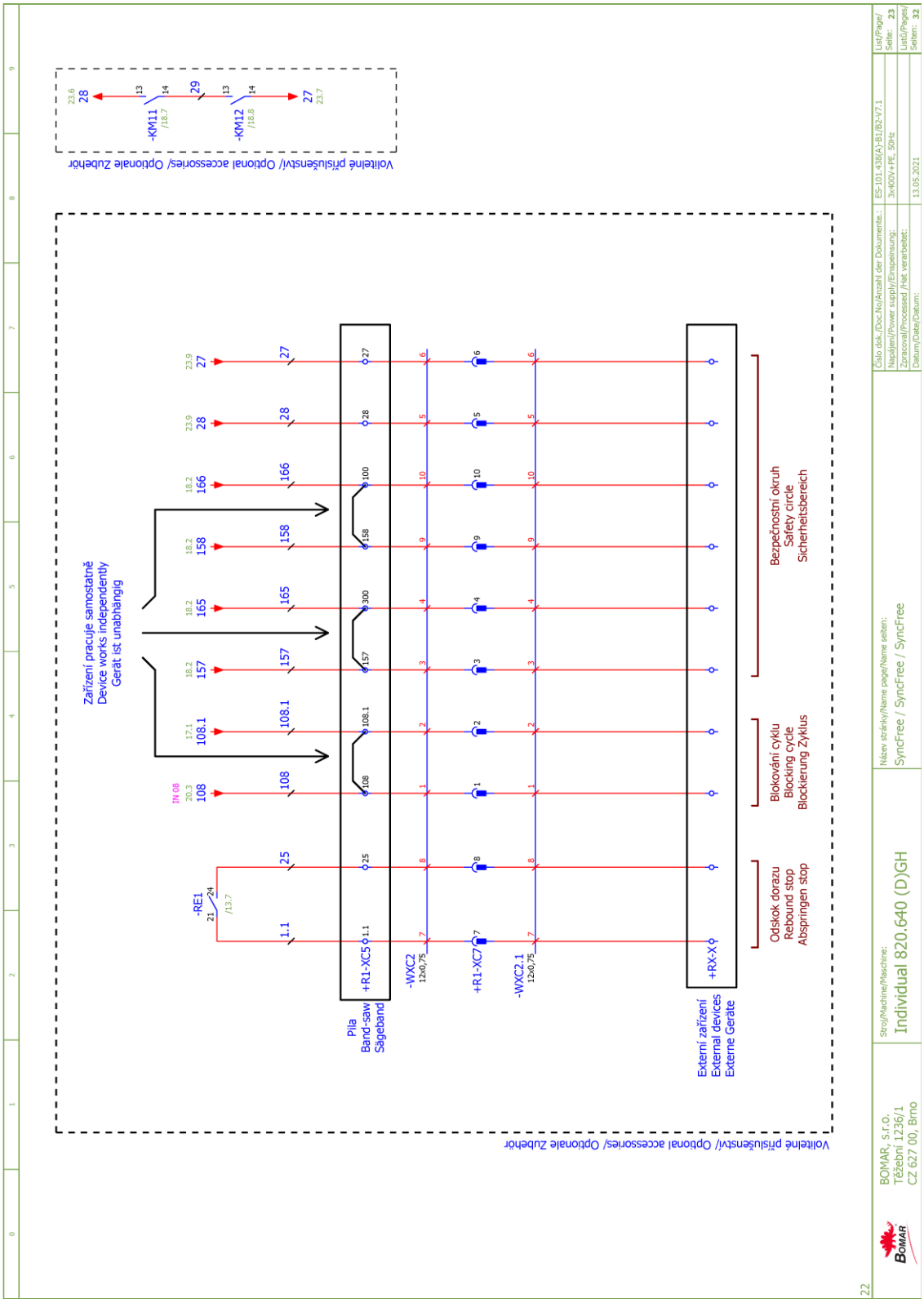
Volitelné příslušenství/ Optional accessories/ Optionale Zubehör
-KM11
-KM12
Zařízení pracuje samostatně
Device works independently
Gerät ist unabhängig
-RE1
+R1-XC5
-WXC2
+R1-XC7
-WXC2.1
+RX-X
Pila
Band-saw
Sägeband
Externí zařízení
External devices
Externe Geräte
Odskok dorazu
Rebound stop
Abspringen stop
Blokování cyklu
Blocking cycle
Blockierung Zyklus
Bezpečnostní okruh
Safety circle
Sicherheitsbereich
Volitelné příslušenství/ Optional accessories/ Optionale Zubehör
BOMAR, s.r.o.
Těžební 1236/1
CZ 627 00, Brno
Stroj/Machine/Maschine:
Individual 820.640 (D)GH
Název stránky/Name page/Name seiten:
SyncFree / SyncFree / SyncFree
Číslo dok./Doc.No/Anzahl der Dokumente:
ES-101.438(A)-B1/B2-V7.1
List/Page/Seite: 23
Listů/Pages/Seiten: 32
Napájení/Power supply/Einspeisung:
3x400V+PE, 50Hz
Zpracoval/Processed /Hat verarbeitet:
Datum/Date/Datum:
13.05.2021
22

6.3. Hydraulické schéma / Hydraulikschema / Hydraulic diagram

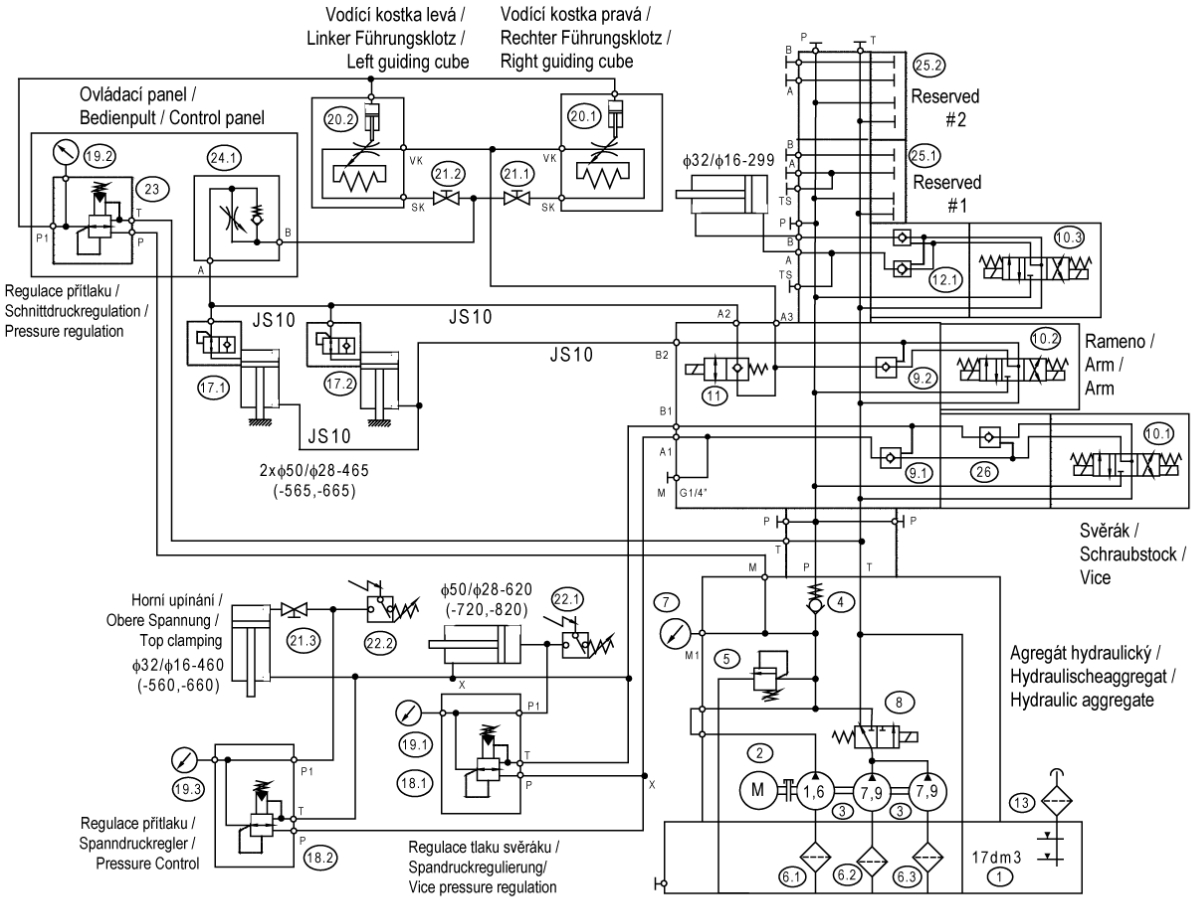

Nestandardní výbava
Nicht-standard-Ausrüstung
Non-standard equipment

Napínání pásu/ Sägebandspannung / Saw band tensing

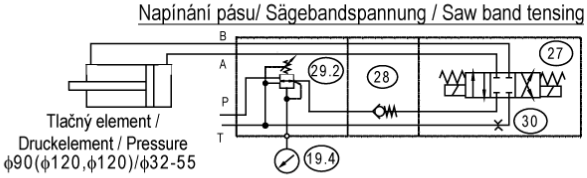

Zdvih stroje / Reise-Tools / Hydraulical saw lift

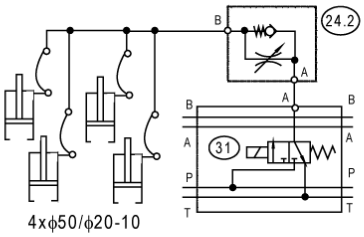

Horní upínání /Obere Spannung / Top clamping

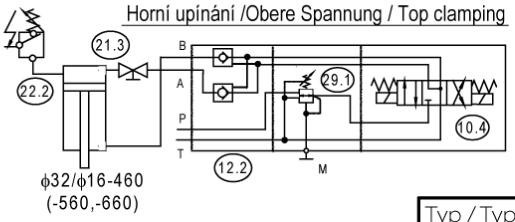

Základní technické parametry
Technische Spezifikation
Technical specification

Typ / Type / Type	Individual 460, 540, 640 (D)GH (TIN7)
Hydraulický agregát / Hydroaggregat Hydro aggregat	SSM-3/79+79+16-1/3-17/02400 92.001.062 (19753500)
Neuvedené světlosti / Unerwähnt Lichtbreite Unlisted inside diameters	JS6
Výstupní šroubení / Ausgangschraubung Output screewing	G1/4"
p_{max}	8 Mpa
Q	21,2+2,2 dm^3/min
n	1425 ot./min
P	3 kW

205.Y416-000
TIN7
INDIV. 620.460 GH,DGH
INDIV. 720.540 GH,DGH
INDIV. 820.640 GH,DGH
15.11.2010

Poz.	Název položky		ks
Pos.	Bezeichnung		Menge
Pos.	Item		Pcs.
1	Nádrž / Behälter / Tank	Ø220-610 mm, 17 l	1
2	Elektromotor / Elektromotor / Electromotor	MA-AL100L 400/230V 50 Hz, 3 kW, 6,68 A	1
3	Hydrogenerátor / Hydraulikgenerator / Hydrogenerator	P23-7,9/7,9/1,6 L62334	1
4	Jednosměrný ventil / Einwegventil / One-way valve	VJ01-06/SG-1	1
5	Přepouštěcí ventil / Bypaßventil / By pass valve	VPN1-06/S-10S/M 27999700	1
6	Sací filtr / Filter / Suction filter	2SF56/48-0,063 63 um	3
7	Manometr / Manometer / Manometer	Ø68 0-10 MPa	1
8	Rozváděč / Schaltschrank / Switchboard	SD2E-A3/C2D21 408-0328.003	1
9	Hydraulický zámek / Hydraulisches Schloß / Hydraulic lock	RJV1-05-0	2
10	Rozváděč / Schaltschrank / Switchboard	RPE3-04Y11/02400E1K1 92.101.005	4(3/2)
11	Rozváděč / Schaltschrank / Switchboard	ROE3-042S2/02400E1K1	1
12	Hydraulický zámek / Hydraulisches Schloß / Hydraulic lock	VJR1-04/MC 92.103.003	2(1/0)
13	Nalévací zátka / Stopfen / Fill stopper	L1.0406	1
14	---	---	-
15	---	---	-
16	---	---	-
17	Pojistný ventil / Sicherungventil / Safety valve	VPNH ¼ 92.151.001	2
18	Redukční ventil / Reduktionventil /	VRN2-06/S-6R 92.154.001	2(1)
19	Manometr / Manometer / Manometer	Ø68, 0–6 MPa	3(2)
20	Kostka regulace / Regulationklotz / Regulation cube		1
21	Kulový ventil /Kugelventil / Globe valve	99.260.004	1(0)
22	Tlakový spínač / Druckschalter / Pressure switch	0166415031059 20–50 bar	2(1)
23	Redukční ventil / Reduktionventil /	VRN2-06/S-6R	1
24	Škrtící ventil / Drosselventil / Throttle-valve	VS01-04/R2,5 92.152.001	2(1)
25	Krycí deska / Schutzplatte / Cover platte	DK 1-04/32-2	2/3(2/3)
26	Hydraulický zámek / Hydraulisches Schloß / Hydraulic lock	VJR1-04/MB 92.103.003	1(0)
27	Rozváděč / Schaltschrank / Switchboard	RPE3-043Z11/02400E1K1 92.101.010	1(0)
28	Jednosměrný ventil / Einwegventil / One-way valve	VJ01-04/MP-30 92.104.001	1(0)
29	Redukční ventil / Reduktionventil /	VRP2-04-PS/6,3 92.154.003	2(0)
30	Clona / Schürze / Shield	0,8 92.153.022	1(0)
31	Rozváděč / Schaltschrank / Switchboard	SD2E-A3/S2D26 408-0328.003	1(0)

7. Výkresy sestav pro objednání náhradních dílů / Zeichnungen für Bestellung der Ersatzteile / Drawing assemblies for spare parts orders - INDIVIDUAL 820.640 DGH – standard

- Při objednávání náhradních dílů vždy uvádějte: typ stroje (např. Individual 820.640 DGH) , výrobní číslo (např. 125) a rok výroby (např. 1999).

- In die Bestellung der Ersatzteile führen Sie immer an: Maschinentyp (z. B. Individual 820.640 DGH), Serien Nr. (z. B. 125) und Baujahr (z. B. 1999).

- For spare parts order, you must always to allege: type of machine (for example Individual 820.640 DGH), serial number (for example 125, see cover page) and year of construction (for example 1999).

7.1. Individual 820.640 DGH

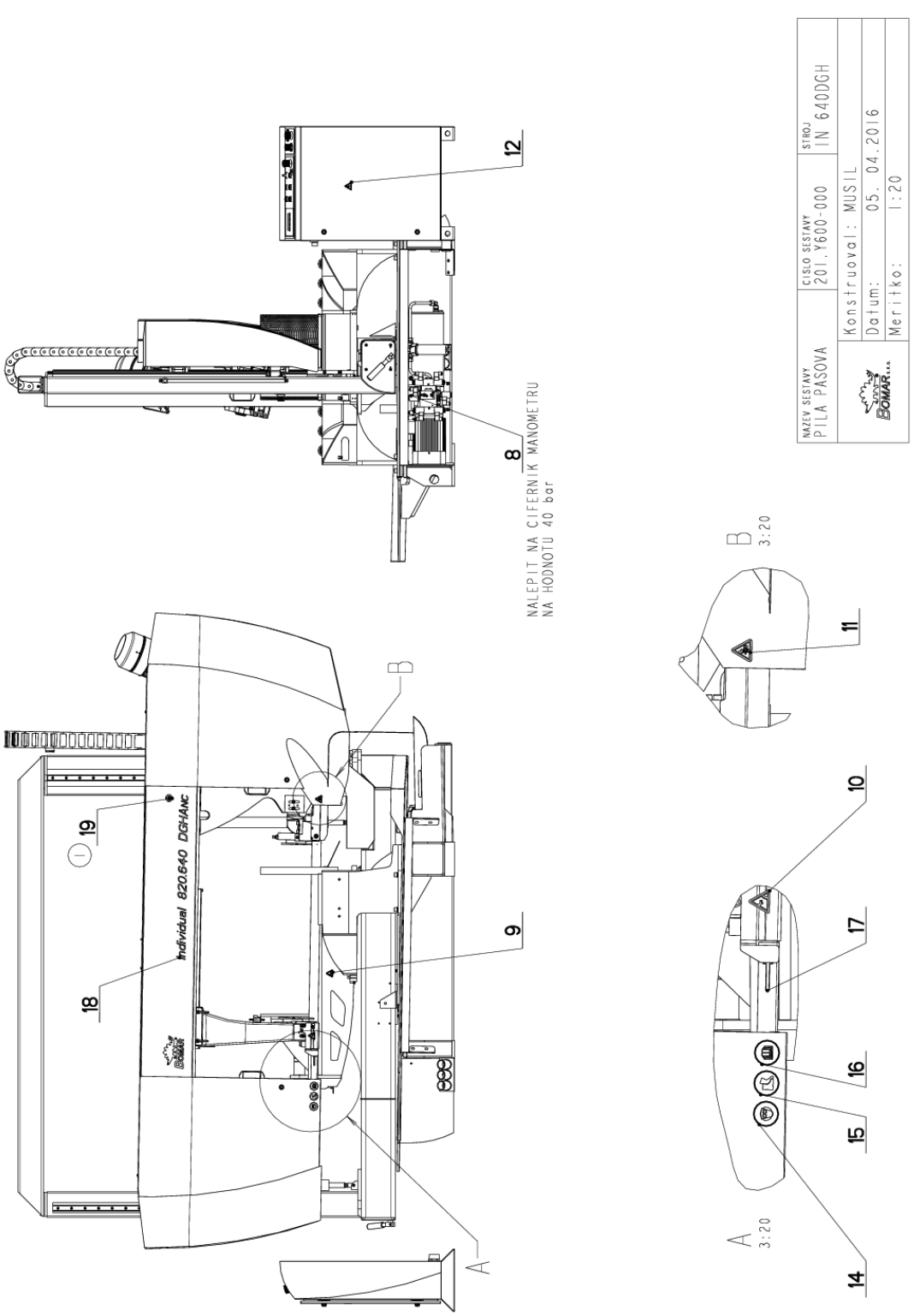

Cislo Sestavy	Ver.	Nazev sestavy
201.Y600-000	3	PILA PASOVA/BAND SAW/BANDSÄGE

Poz.	Objednaci cislo	Ver.	Nazev polozky	Rozmer	Ks
1	201.Y430-000 (2)	2	OVLADACI PANEL / CONTROL PANEL / BEDIENPULT		1
2	201.Y601-100	5	PODSTAVEC / BASE / UNTERSATZ		1
3	201.Y602-100	3	KONZOLA / CONSOLE / KONSOLE		1
4	201.Y604-200 (2)	2	RAMENO / SHOULDER / SÄGERAHMEN		1
5	201.Y607-010	4	VALEC ZVEDACI / LIFTING CYLINDER / HEBEZYLINDER		2
6	201.Y609-000	5	SVERAK / VICE / SCHRAUBSTOCK		1
7	30.Y699-001 (3)	5	STITEK TYPOVY / /	P 0.5x65	1
8	31.0899-004	0	SAMOLEPKA / STICKER / AUFKLEBER		1
9	99.900.039	0	SAMOLEPKA / STICKER / AUFKLEBER	NEBEZP.STLACENI	1
10	99.900.040	0	SAMOLEPKA / STICKER / AUFKLEBER		1
11	99.900.043	0	SAMOLEPKA / STICKER / AUFKLEBER		1
12	99.900.045	0	SAMOLEPKA / STICKER / AUFKLEBER		1
13	99.900.046	0	SAMOLEPKA / STICKER / AUFKLEBER		1
14	99.900.047	0	SAMOLEPKA / STICKER / AUFKLEBER		1
15	99.900.048	0	SAMOLEPKA / STICKER / AUFKLEBER		1
16	99.900.049	0	SAMOLEPKA / STICKER / AUFKLEBER		1
17	99.900.053	0	SAMOLEPKA / STICKER / AUFKLEBER		1
18	99.901.031	0	SAMOLEPKA / STICKER / AUFKLEBER	IN820.640 DGH	1
19	99.901.032 (1)	0	SAMOLEPKA / STICKER / AUFKLEBER	CETIFIKACNI SAMOLEPKA	1

1.PRIDANA CERTIFIKACNI SAMOLEPKA 99.901.032. 40/ZM227 2.8.2010 SLEZACKOVA
2.ZRUS. RAMENO 201.Y604-100 A NAHR. 201.Y604-200,ZRUS.ROZVADEC 201.6030-400 A NAHR.201.Y430-000. 219/ZM281 8.11.2011 SLEZACKOVA
3.PRECISLOVAN TYPOVY STITEK 31.Y699-001 NA 30.Y699-001. 001/ZM084 5.4.2016 SLEZACKOVA

Cislo Sestavy/Number of assembly/Nummer der Baugruppe; Verze (Ver.)/Version/Version; Nazev sestavy/Assembly title/Name der Baugruppe; Pozice (Poz.)/Position/Position; Objednaci cislo/Purchase order number/Bestellnummer; Nazev polozky/Volume title/Name der Position; Rozmer/Stock size/Abmessung

7.3. Individual 820.640 DGH

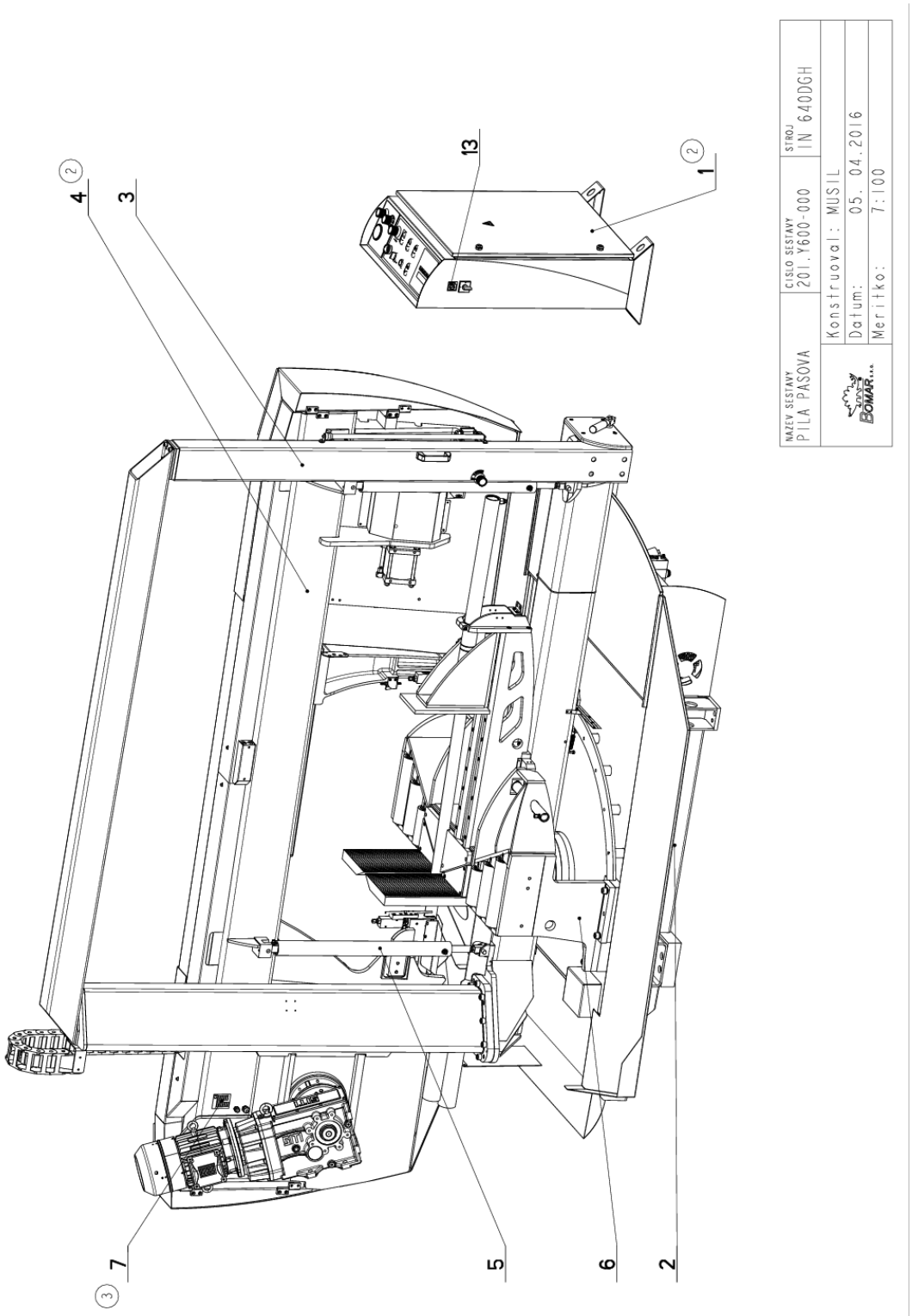

Cislo Sestavy	Ver.	Nazev sestavy
201.Y600-000	3	PILA PASOVA/BAND SAW/BANDSÄGE

Poz.	Objednaci cislo	Ver.	Nazev polozky	Rozmer	Ks
1	201.Y430-000 (2)	2	OVLADACI PANEL / CONTROL PANEL / BEDIENPULT		1
2	201.Y601-100	5	PODSTAVEC / BASE / UNTERSATZ		1
3	201.Y602-100	3	KONZOLA / CONSOLE / KONSOLE		1
4	201.Y604-200 (2)	2	RAMENO / SHOULDER / SÄGERAHMEN		1
5	201.Y607-010	4	VALEC ZVEDACI / LIFTING CYLINDER / HEBEZYLINDER		2
6	201.Y609-000	5	SVERAK / VICE / SCHRAUBSTOCK		1
7	30.Y699-001 (3)	5	STITEK TYPOVY / /	P 0.5x65	1
8	31.0899-004	0	SAMOLEPKA / STICKER / AUFKLEBER		1
9	99.900.039	0	SAMOLEPKA / STICKER / AUFKLEBER	NEBEZP.STLACENI	1
10	99.900.040	0	SAMOLEPKA / STICKER / AUFKLEBER		1
11	99.900.043	0	SAMOLEPKA / STICKER / AUFKLEBER		1
12	99.900.045	0	SAMOLEPKA / STICKER / AUFKLEBER		1
13	99.900.046	0	SAMOLEPKA / STICKER / AUFKLEBER		1
14	99.900.047	0	SAMOLEPKA / STICKER / AUFKLEBER		1
15	99.900.048	0	SAMOLEPKA / STICKER / AUFKLEBER		1
16	99.900.049	0	SAMOLEPKA / STICKER / AUFKLEBER		1
17	99.900.053	0	SAMOLEPKA / STICKER / AUFKLEBER		1
18	99.901.031	0	SAMOLEPKA / STICKER / AUFKLEBER	IN820.640 DGH	1
19	99.901.032 (1)	0	SAMOLEPKA / STICKER / AUFKLEBER	CETIFIKACNI SAMOLEPKA	1

1.PRIDANA CERTIFIKACNI SAMOLEPKA 99.901.032. 40/ZM227 2.8.2010 SLEZACKOVA
2.ZRUS. RAMENO 201.Y604-100 A NAHR. 201.Y604-200,ZRUS.ROZVADEC 201.6030-400 A NAHR.201.Y430-000. 219/ZM281 8.11.2011 SLEZACKOVA
3.PRECISLOVAN TYPOVY STITEK 31.Y699-001 NA 30.Y699-001. 001/ZM084 5.4.2016 SLEZACKOVA

Cislo Sestavy/Number of assembly/Nummer der Baugruppe; Verze (Ver.)/Version/Version; Nazev sestavy/Assembly title/Name der Baugruppe; Pozice (Poz.)/Position/Position; Objednaci cislo/Purchase order number/Bestellnummer; Nazev polozky/Volume title/Name der Position; Rozmer/Stock size/Abmessung

7.5. Ovladací panel / Control panel / Bedienpult

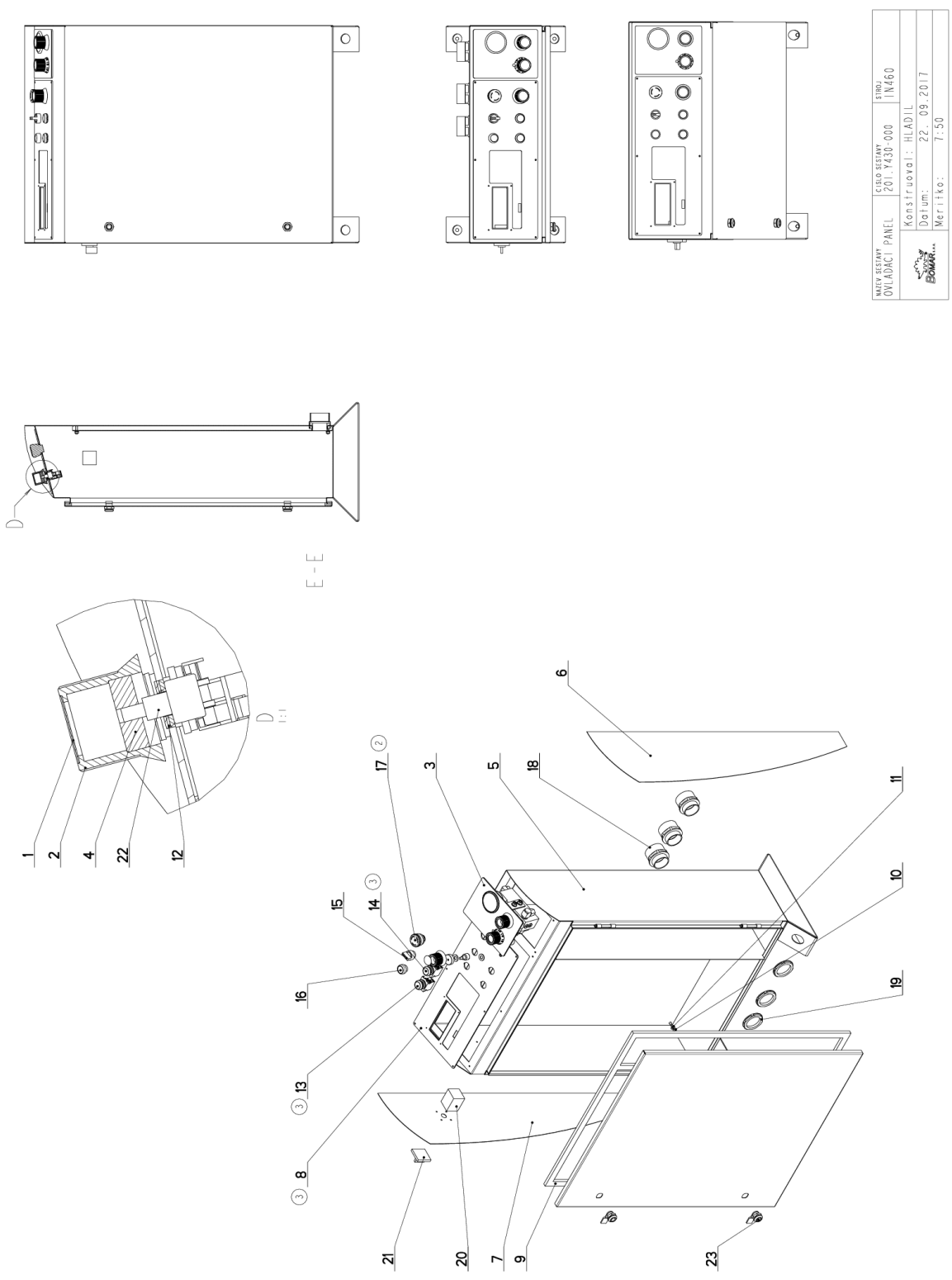

7.6. Kusovník / Piece list / Stückliste - Ovladací panel / Control panel / Bedienpult

Cislo Sestavy	Ver.	Nazev sestavy
201.Y430-000	3	OVLADACI PANEL/CONTROL PANEL/BEDIENPULT

Poz.	Objednaci cislo	Ver.	Nazev polozky	Rozmer	Ks
1	30.6130-012	0	VIKO / COVER / DECKEL	P 0,5x30	3
2	31.6130-008	0	HLAVICE / HEAD / KOPF		1
3	201.R230-220	1	OVLADACI PANEL / CONTROL PANEL / BEDIENPULT		1
4	30.R230-010	0	MEZIKUS / INTERMEDIATE PIECE / PASSSTÜCK	d 32	1
5	30.R230-201	4	SKRIN / BOX / KASTEN		1
6	30.R230-204	0	PLECH / PLATE / BLECH	P 1x220	1
7	30.R230-206	1	PLECH / PLATE / BLECH	P 1x220	1
8	31.R230-207 (3)	0	PANEL ELEKTRO / ELECTRO PANEL / PANEL	P 3x205	1
9	61.352.001	0	TESNENI / SEALING / DICHTUNG	TESNENI 19x10	1
10	90.100.55.004	0	MATICE / NUT / MUTTER	MATICE _ M6	4
11	90.150.50.004	0	PODLOZKA / WASHER / UNTERLEGSCHEIBE	PODLOZKA 6,4	4
12	90.150.50.006	0	PODLOZKA / WASHER / UNTERLEGSCHEIBE	PODLOZKA 10,5	2
13	91.060.031 (3)	0	SPINAC / SWITCH / SCHALTER	zelene - prosveltlene	1
14	91.060.035 (3)	0	SPINAC / SWITCH / SCHALTER	cerne	1
15	91.060.051	0	PREPINAC / SWITCH / UMSCHALTER		1
16	91.060.053	0	HLAVICE / HEAD / KOPF		1
17	91.060.084 (2)	0	HLAVICE TOTAL STOP / TOTAL STOP HEAD / TASTE TOTAL STOP		1
18	91.071.022	0	VYVODKA / BUSHING / TÜLLE		3
19	91.072.016	0	MATICE / NUT / MUTTER		3
20	91.170.003	0	SPINAC VACKOVY / CAM SWITCH / SCHALTER	LE2-12-1763	1
21	91.180.001	0	DESKA SPINACE / ELECTRIC BOARD / PLATINE		1
22	91.283.015	0	POTENCIOMETR / POTENTIOMETER / POTENTIOMETER	TP 195 4K7/N 20A	1
23	99.104.002	0	ZAMEK / LOCK / SCHLOSS	ZAMEK CINSKY	2

1.ZRUS.VIKO 30.R230-203,PANEL 30.R230-202,2xCEP 30.7217-028,2XPOJ.KROUZEK 95.802.003 (PRIDANO DO SKRINE 30.R230-201). 061/ZM110 29.3.2012 SLEZACKOVA

2.ZRUS.HLAVICE TOTAL STOP 91.060.030 A NAHR.91.060.084 147/ZM184 2.7.2013 SLEZACKOVA

3.ZRUS PANEL ELEKTRO 251.654 A NAHR. 31.R230-207,ZRUS TLACITKA 91.060.034 A 91.060.055 A 91.060.054 A 91.060.033, PRID. TLACITKA 91.060.031 A 91.060.035 201/ZM304 22.9.2017 CERNY

Cislo Sestavy/Number of assembly/Nummer der Baugruppe; Verze (Ver.)/Version/Version; Nazev sestavy/Assembly title/Name der Baugruppe; Pozice (Poz.)/Position/Position; Objednaci cislo/Purchase order number/Bestellnummer; Nazev polozky/Volume title/Name der Position; Rozmer/Stock size/Abmessung

7.7. Ovladací panel / Control panel / Bedienpult

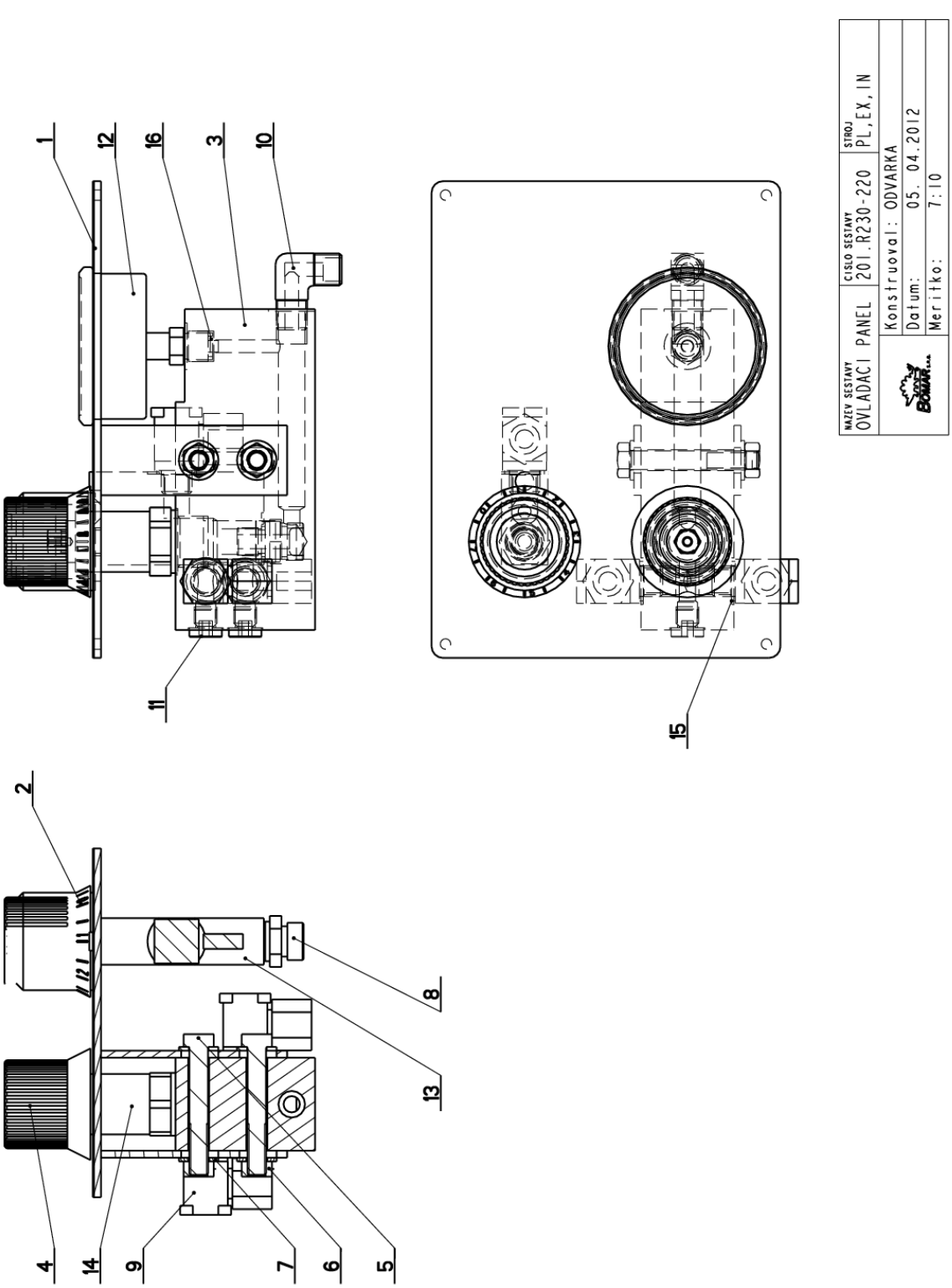

7.8. Kusovník / Piece list / Stückliste - Ovladací panel / Control panel / Bedienpult

Cislo Sestavy	Ver.	Nazev sestavy
201.R230-220	1	OVLADACI PANEL/CONTROL PANEL/BEDIENPULT

Poz.	Objednaci cislo	Ver.	Nazev polozky	Rozmer	Ks
1	251.652	0	PANEL / PANEL / PANEL		1
2	30.6130-018	0	HLAVICE / HEAD / KOPF	VYLISEK	1
3	30.6130-103	2	KOSTKA REGULACE / REGULATION CUBE / REGELUNGSWÜRFEL	TYC 60x40	1
4	31.6130-008	0	HLAVICE / HEAD / KOPF		1
5	90.005.55.064	0	SROUB 6HRANNY / 6 SIDED BOLT / SECHSKANTSCHRAUBE	SROUB M8X55	2
6	90.100.55.005	0	MATICE / NUT / MUTTER	MATICE _ M8	2
7	90.150.50.005	0	PODLOZKA / WASHER / UNTERLEGSCHEIBE	PODLOZKA 8,4	4
8	92.002.103	0	SROUBENI PRIME / DIRECT BOLTING / GERADE VERSCHRAUBUNG	G 1/4" tr12	1
9	92.003.001	0	SROUBENI UHLOVE / ANGLE BOLTING / WINKELVERSCHRAUBUNG	P-RSWS-08LR	3
10	92.004.001	0	SROUBENI UHLOVE / ANGLE BOLTING / WINKELVERSCHRAUBUNG	37701	1
11	92.019.003	0	ZATKA / PLUG / STOPFEN	G1/4" VNITRNI IMBUS	2
12	92.080.002	0	MANOMETR / MANOMETER / MANOMETER	d 63 - 60bar	1
13	92.152.001	0	VENTIL SKRTICI / CHOKE VALVE / DROSSELVENTIL	VS01-04/R 2.5-0	1
14	92.154.001	0	VENTIL REDUKCNI / REDUCTION VALVE / DRUCKMINDERUNGSVENTIL		1
15	96.082.002	0	TESNENI / SEALING / DICHTUNG	KROUZEK CU 13/17	4
16	96.082.005	0	KROUZEK TESNICI / SEAL RING / DICHTUNGSRING	5x8.8x1	2

Cislo Sestavy/Number of assembly/Nummer der Baugruppe; Verze (Ver.)/Version/Version; Nazev sestavy/Assembly title/Name der Baugruppe; Pozice (Poz.)/Position/Position; Objednaci cislo/Purchase order number/Bestellnummer; Nazev polozky/Volume title/Name der Position; Rozmer/Stock size/Abmessung

7.9. Panel / Panel / Panel

Cislo Sestavy	Ver.	Nazev sestavy
251.652	0	PANEL/PANEL /PANEL

Poz.	Objednací cislo	Ver.	Nazev polozky	Rozmer	Ks
1	30.R230-221	0	PANEL / PANEL / PANEL		1
2	31.R230-211	0	SAMOLEPKA / STICKER / AUFKLEBER		1

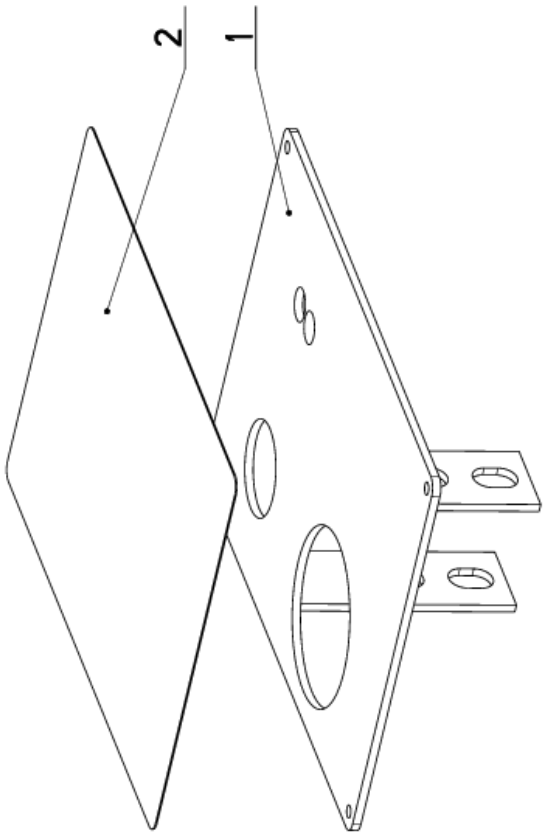

Cislo Sestavy/Number of assembly/Nummer der Baugruppe; Verze (Ver.)/Version/Version; Nazev sestavy/Assembly title/Name der Baugruppe; Pozice (Poz.)/Position/Position;
Objednací cislo/Purchase order number/Bestellnummer; Nazev polozky/Volume title/Name der Position; Rozmer/Stock size/Abmessung

7.10. Podstavec / Base / Untersatz

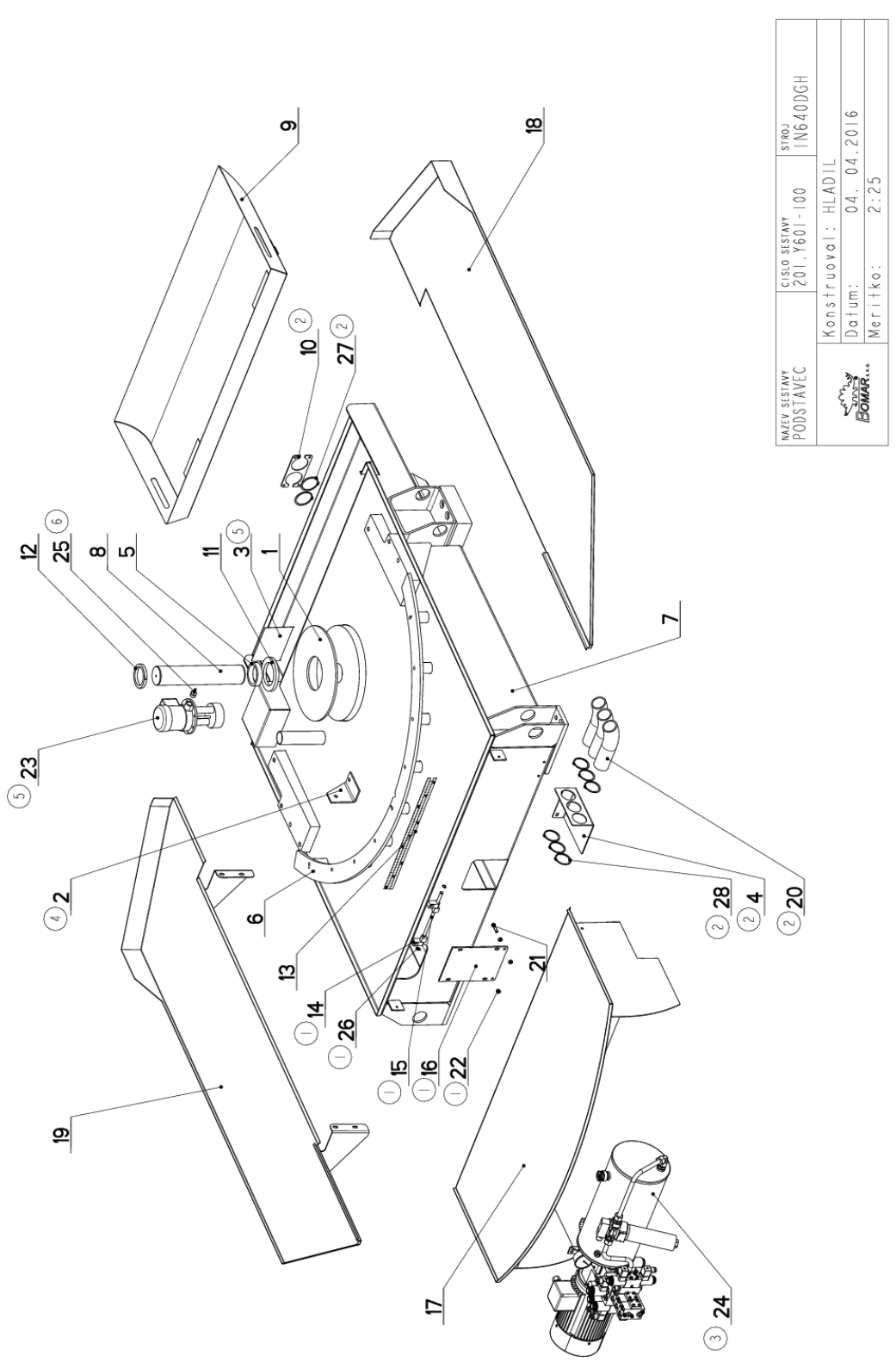

7.11. Kusovník / Piece list / Stückliste - Podstavec / Base / Untersatz

Cislo Sestavy	Ver.	Nazev sestavy
201.Y601-100	6	PODSTAVEC/BASE/UNTERSATZ

Poz.	Objednaci cislo	Ver.	Nazev polozky	Rozmer	Ks
1	30.7202-008	0	PRIRUBA / FLANGE / FLANSCHE	P 8x350	1
2	30.7202-199 (4)	2	KONZOLA / CONSOLE / KONSOLE	HR 100x5	1
3	30.M201-015 (5)	0	PLECH / PLATE / BLECH	P 1,5x119	1
4	30.V301-205 (2)	0	DRZAK / HOLDER / HALTER	P 3x234	1
5	30.Y501-004	0	KROUZEK / RING / RING	TR 89x12,5	1
6	30.Y501-009	4	SEGMENT / SEGMENT / SEGMENT	P 12x527	1
7	30.Y501-101	8	PODSTAVEC / BASE / UNTERSATZ		1
8	30.Y501-103	0	CEP / LUG / BOLZEN	d 70	1
9	30.Y501-110	2	VANA / /		1
10	30.Y502-163 (2)	1	UCHYTKA / CLIP / HALTER	P 3x80	1
11	30.Y511-005	0	KROUZEK / RING / RING	Tr 133x25	1
12	30.Y601-005	0	KROUZEK / RING / RING	TR 89x12,5	1
13	30.Y601-041	0	STUPNICE / SCALE / SKALA	P0,5-36	1
14	30.Y601-111 (1)	0	DRZAK / HOLDER / HALTER	HR 20x20	2
15	30.Y601-112 (1)	0	OSA / AXLE / ACHSE	d 10	1
16	30.Y601-113 (1)	0	DRZAK / HOLDER / HALTER		1
17	30.Y601-202	1	KRYT HYDRAULIKY / HYDRAULIC COVER / HYDRAULIKABDECKUNG		1
18	30.Y614-017	1	OKAP / GUTTER CHANNEL / BLECH		1
19	30.Y614-018	1	OKAP / GUTTER CHANNEL / BLECH		1
20	41.001.006 (2)	0	HADICE / HOSE / SCHLAUCH	55/46	3
21	90.005.55.018 (1)	0	SROUB 6HRANNY / 6 SIDED BOLT / SECHSKANTSCHRAUBE	SROUB M8X35	2
22	90.100.55.005 (1)	0	MATICE / NUT / MUTTER	MATICE _ M8	4
23	91.020.032 (5)	0	CERPADLO CHLAZENI / COOLING PUMP / KÜHLMITTELPUMPE	230/400V	1
24	92.001.075 (3)	0	AGREGAT HYDRAULICKY / /	2.2kW	1
25	94.202.020 (6)	0	REDUKCE / REDUCTION / ADAPTOR / REDUKTION	1/2"-6	1
26	95.800.003 (1)	0	SEGR HRIDEL. / OUTSIDE SAFETY RING / SICHERUNGSRING AUSSEN	POJISTNY KROUZEK 10	2
27	95.800.021 (2)	0	SEGR HRIDEL. / OUTSIDE SAFETY RING / SICHERUNGSRING AUSSEN	POJISTNY KROUZEK 62	2
28	95.800.034 (2)	0	SEGR HRIDEL. / OUTSIDE SAFETY RING / SICHERUNGSRING AUSSEN	POJISTNY KROUZEK 55	6

1. DOPLNENY POLOZKY 30.Y601-111, 30.Y601-112, 30.Y601-113, 95.800.003,90.100.55.005,90.005.55.018. 158/zm.117 HLADIL 29.04.2010
2.ZRUS.UCHYTKA 30.Y501-162 A NAHR.30.Y502-163,ZRUS.POJ.KROUZEK 95.800.016 A NAHR.95.800.021,ZRUS.DRZAK 30.N301-010 A NAHR.30.V301-205, PRIDANY SOUC.1x95.800.034.1x41.001.006. 326/ZM016 13.4.2011 SLEZACKOVA
3.ZRUS.AGREGAT 92.001.062 A NAHR. 92.001.075. 117/ZM132 31.5.2011 SLEZACKOVA
4.PRIDANA KONZOLA 30.7202-199. 223/ZM297 10.10.2012 SLEZACKOVA
5.ZRUS.CERPADLO 91.020.015 A NAHR.91.020.032,PRID.REDUKCE 94.202.021,PLECH 30.M201-015. 024/ZM084 4.4.2016 SLEZACKOVA
6.ZRUS.REDUKCE 94.202.021 A NAHR.94.202.020. 024/ZM200 12.7.2016 SLEZACKOVA

Cislo Sestavy/Number of assembly/Nummer der Baugruppe; Verze (Ver.)/Version/Version; Nazev sestavy/Assembly title/Name der Baugruppe; Pozice (Poz.)/Position/Position; Objednaci cislo/Purchase order number/Bestellnummer; Nazev polozky/Volume title/Name der Position; Rozmer/Stock size/Abmessung

7.12. Konzola / Console / Konsole

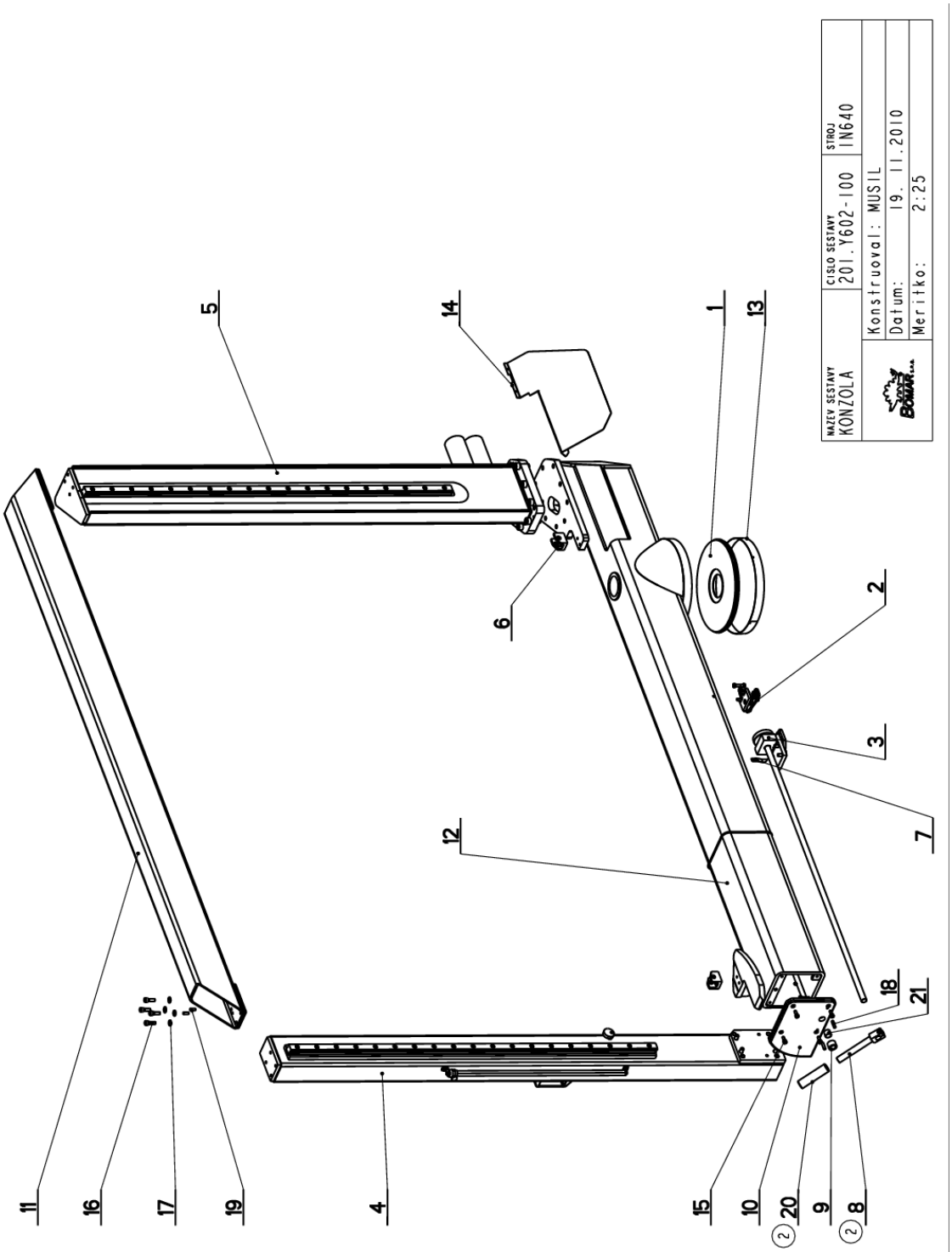

Cislo Sestavy	Ver.	Nazev sestavy
201.Y602-100	3	KONZOLA/CONSOLE/KONSOLE

Poz.	Objednaci cislo	Ver.	Nazev polozky	Rozmer	Ks
1	201.7102-100	0	LOZISKO / BEARING / LAGER		1
2	201.Y302-030	0	CENTROVANI / CENTERING / ZENTRIEREN		1
3	201.Y602-020	0	BRZDA / BRAKE / BREMSE		1
4	201.Y602-050	3	SLOUP / POLE / SÄULE		1
5	201.Y602-160	3	SLOUP / POLE / SÄULE		1
6	30.0807-008	2	DRZAK / HOLDER / HALTER	HR 40x40	2
7	30.4604-004	0	UKAZATEL / INDICATOR / ZEIGER	P 1,5x15	1
8	30.8602-505 (2)	0	PAKA / LEVER / HEBEL		1
9	30.Y302-204	0	KROUZEK DISTANCNI / DISTANCE RING / DISTANZRING	TR 30x5	1
10	30.Y502-203	1	DESKA / BOARD / PLATTE	P15-200	1
11	30.Y602-002	0	PRICKA / BRACE / QUERLATTE		1
12	30.Y602-101	0	KONZOLA / CONSOLE / KONSOLE	SVARENO	1
13	30.Y602-105 (1)	0	PLECH / PLATE / BLECH	P 0,8 - 33	1
14	30.Y614-301	0	SKLUZ / SLIDE / RUTSCH	P1-334	1
15	90.001.25.032	0	SROUB IMBUS CERNENY / ALLEN HEAD BOLT / IMBUSSCHRAUBE	8x20	4
16	90.001.25.048	0	SROUB IMBUS / ALLEN HEAD BOLT / IMBUSSCHRAUBE	M10X30	8
17	90.150.50.006	0	PODLOZKA / WASHER / UNTERLEGSCHEIBE	PODLOZKA 10,5	8
18	90.300.0Z.010	0	KOLIK VALC. KAL. / CYLINDRICAL PIN TEMPERED / ZYLINDERSTIFT GEHARTET	KOLIK 8X32	2
19	90.301.0Z.021	0	KOLIK VALCOVY / CYLINDRICAL PIN SOFT / ZYLINDERSTIFT WEICH	KOLIK 8X22	4
20	94.004.502 (2)	0	RUKOJET / HANDLE / GRIFF	D22	1
21	95.700.004	0	POUZDRO / SLEEVE / BÜCHSE	20X20	1

1. KU POUZDRO 95.700.039 NAHRAZENO KX POUZDREM 95.720.003, SOUC. 30.7202-123 NAHRAZENA 30.Y602-105 120/zm.093 HLADIL 9.4.2010
2. ZRUSENA ZASLEPKA 30.Y302-205,ZRUS.SOUC.30.8602-514 A NAHR.30.8602-505,ZRUS.SOUC.94.002.001 A NAHR.94.004.502. 279,167/ZM289 19.11.2010 SLEZACKOVA
3. ZRUS.2xPOUZDRO 95.720.003. 290/ZM325 15.12.2011 SLEZACKOVA

Cislo Sestavy/Number of assembly/Nummer der Baugruppe; Verze (Ver.)/Version/Version; Nazev sestavy/Assembly title/Name der Baugruppe; Pozice (Poz.)/Position/Position; Objednaci cislo/Purchase order number/Bestellnummer; Nazev polozky/Volume title/Name der Position; Rozmer/Stock size/Abmessung

7.14. Brzda / Brake / Bremse

Cislo Sestavy 201.Y602-020 | Ver. 0 | Nazev sestavy BRZDA/BRAKE/BREMSE

Poz.	Objednaci cislo	Ver.	Nazev polozky	Rozmer	Ks
1	30.Y402-022	0	DESKA / BOARD / PLATTE	P2-30	1
2	30.Y402-023	0	SROUB STAVECI / ADJUSTMENT BOLT / STELLSCHRAUBE	6HR 19	2
3	30.Y402-024	0	DESKA / BOARD / PLATTE	HR 80x10	1
4	30.Y402-027	0	KROUZEK / RING / RING	TR 25x5	1
5	30.Y402-028	0	TELESO / BODY / KÖRPER		1
6	30.Y402-029	0	DESKA / BOARD / PLATTE	P 3-15	1
7	30.Y602-025	0	EXCENTR / CAM / EXZENTER		1
8	90.001.25.015	0	SROUB IMBUS / ALLEN HEAD BOLT / IMBUSSCHRAUBE	M6X10	2
9	90.001.25.039	0	SROUB IMBUS / ALLEN HEAD BOLT / IMBUSSCHRAUBE	M8X55	2
10	90.001.25.046	0	SROUB IMBUS / ALLEN HEAD BOLT / IMBUSSCHRAUBE	M10X20	4
11	90.005.55.015	0	SROUB 6HRANNY / 6 SIDED BOLT / SECHSKANTSCHRAUBE	SROUB M8X20	1
12	90.011.27.003	0	SROUB ZAPUSTNY / COUNTERSINK BOLT / SENKSCHRAUBE	SROUB M5X10	2
13	90.101.55.001	0	MATICE / NUT / MUTTER	MATICE M8	1
14	95.700.004	0	POUZDRO / SLEEVE / BÜCHSE	20X20	1

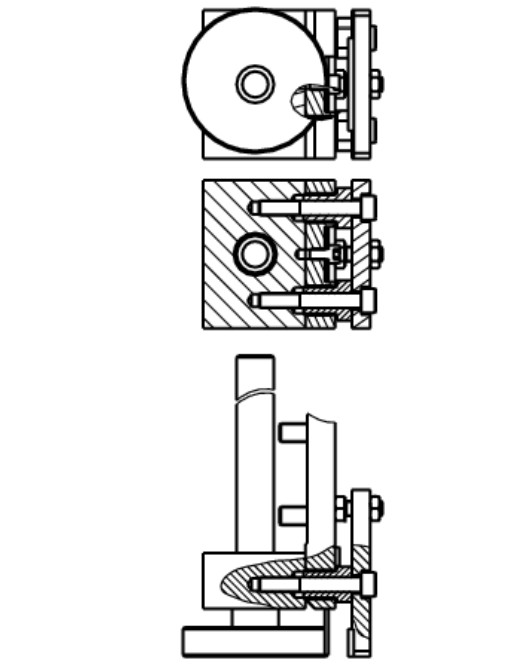

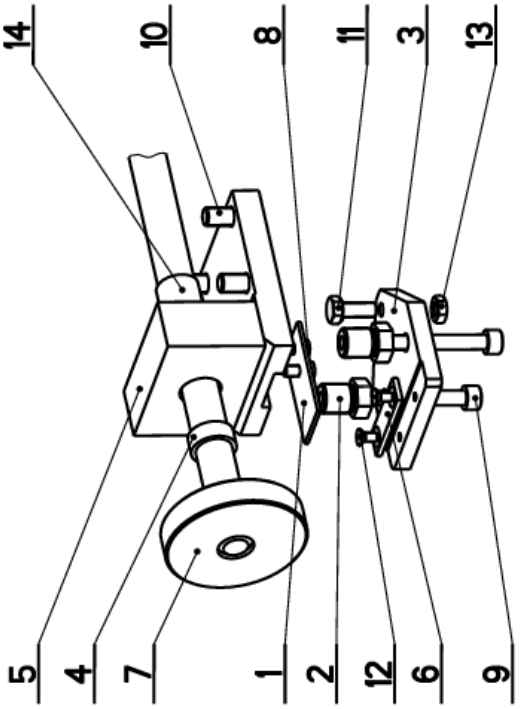

Cislo Sestavy/Number of assembly/Nummer der Baugruppe; Verze (Ver.)/Version/Version; Nazev sestavy/Assembly title/Name der Baugruppe; Pozice (Poz.)/Position/Position; Objednaci cislo/Purchase order number/Bestellnummer; Nazev polozky/Volume title/Name der Position; Rozmer/Stock size/Abmessung

7.15. Ložisko / Bearing / Lage

Cislo Sestavy	Ver.	Nazev sestavy
201.7102-100	0	LOZISKO/BEARING/LAGER

Poz.	Objednaci cislo	Ver.	Nazev polozky	Rozmer	Ks
1	30.7102-103	0	CEP / LUG / BOLZEN	d 16	8
2	31.7102-101	0	KOTOUC / DISC / SCHEIBE	340x125x2.2	2
3	81.7102-102	0	KOTOUC / DISC / SCHEIBE	P 2 -348	1
4	95.692.001	0	VALECEK / CYLINDER / ROLLE	12x12	36

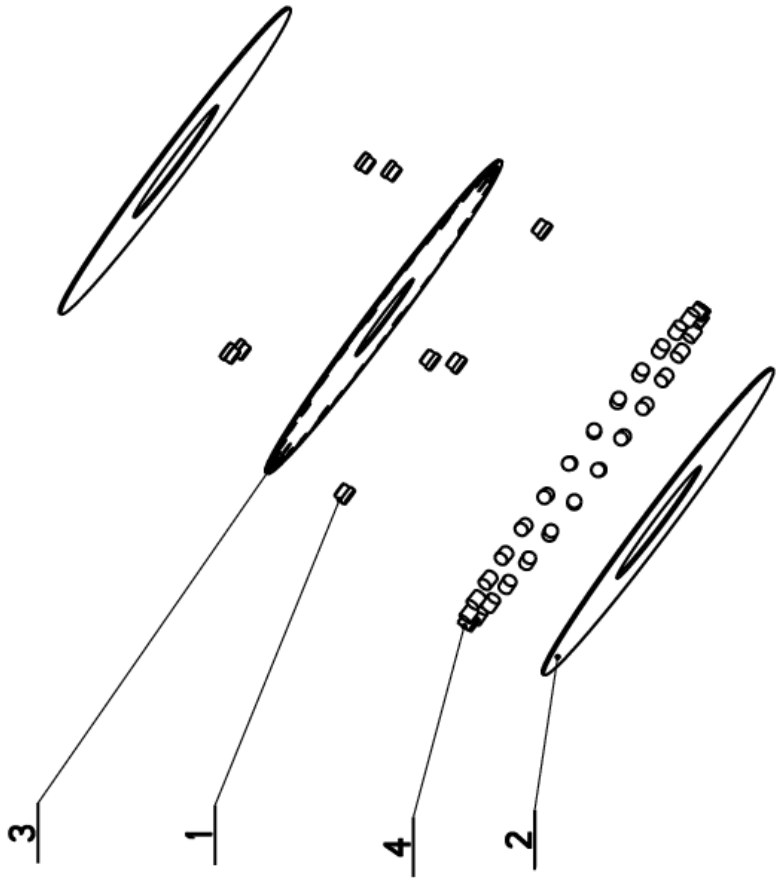

7.16. Centrování / Centering / Zentrieren

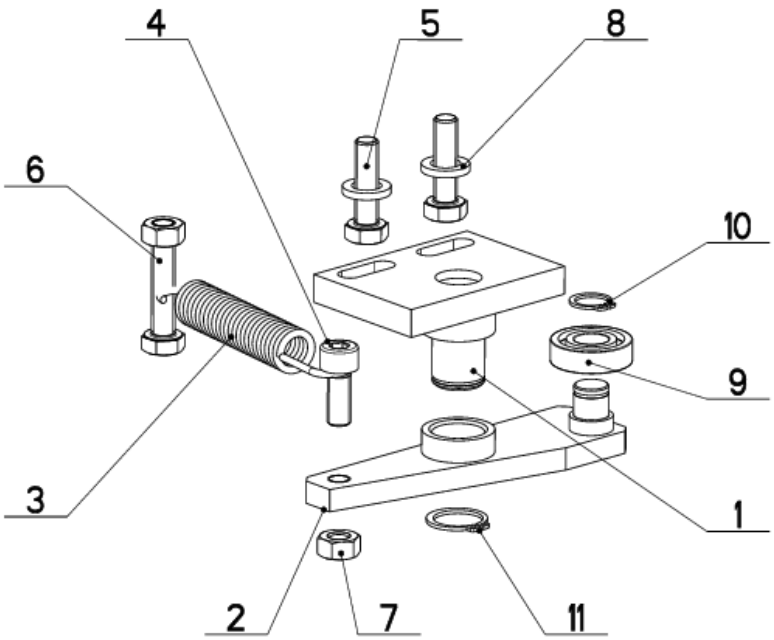

NAZEV SESTAVY	CISLO SESTAVY	STROJ
CENTROVANI	201.Y302-030	IN360DGH

BOMAR	Konstruoval: HLADIL
	Datum: 06. 04.2018
	Meritko: 1:2

7.17. Kusovník / Piece list / Stückliste - Centrování / Centering / Zentrieren

Cislo Sestavy	Ver.	Nazev sestavy
201.Y302-030	0	CENTROVANI/CENTERING/ZENTRIEREN

Poz.	Objednaci cislo	Ver.	Nazev polozky	Rozmer	Ks
1	30.Y302-031	2	CEP / LUG / BOLZEN		1
2	30.Y302-032	1	PAKA / LEVER / HEBEL		1
3	31.0206-005	0	PRUZINA / SPRING / FEDER	2.50x16x90x27	1
4	90.001.25.032	0	SROUB IMBUS / ALLEN HEAD BOLT / IMBUSSCHRAUBE	8x20	1
5	90.005.55.017	0	SROUB 6HRANNY / 6 SIDED BOLT / SECHSKANTSCHRAUBE	SROUB M8X30	2
6	90.005.55.019	0	SROUB 6HRANNY / 6 SIDED BOLT / SECHSKANTSCHRAUBE	SROUB M8X40	1
7	90.100.55.005	0	MATICE / NUT / MUTTER	MATICE _ M8	2
8	90.163.00.004	0	PODLOZKA / WASHER / UNTERLEGSCHEIBE	NORD-LOCK	2
9	95.001.005	0	LOZISKO / BEARING / LAGER	6001 2RS	1
10	95.800.004	0	SEGR HRIDEL. / OUTSIDE SAFETY RING / SICHERUNGSRING AUSSEN	POJISTNY KROUZEK 12	1
11	95.800.008	0	SEGR HRIDEL. / OUTSIDE SAFETY RING / SICHERUNGSRING AUSSEN	POJISTNY KROUZEK 18	1

Cislo Sestavy/Number of assembly/Nummer der Baugruppe; Verze (Ver.)/Version/Version; Nazev sestavy/Assembly title/Name der Baugruppe; Pozice (Poz.)/Position/Position; Objednaci cislo/Purchase order number/Bestellnummer; Nazev polozky/Volume title/Name der Position; Rozmer/Stock size/Abmessung

7.18. Sloup / Pole / Säule

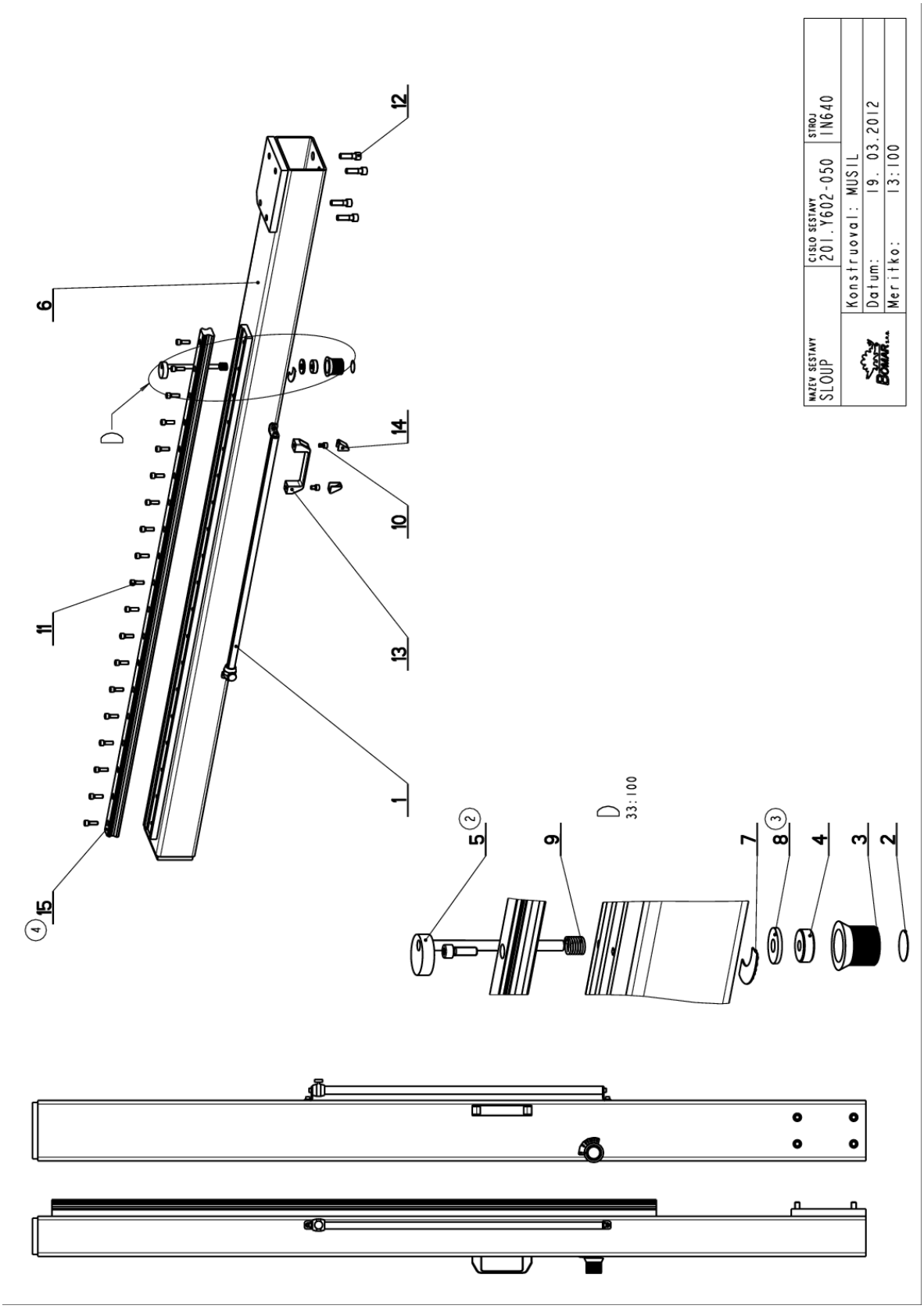

Cislo Sestavy	Ver.	Nazev sestavy
201.Y602-050	4	SLOUP/POLE/SÄULE

Poz.	Objednaci cislo	Ver.	Nazev polozky	Rozmer	Ks
1	201.Y602-070	1	ODMEROVANI / MEASURING / GEHRUNGSMESSUNG	SESTAVA	1
2	30.6130-012	0	VIKO / COVER / DECKEL	P 0.5x 30x30	1
3	30.6130-020	0	OVLADANI / CONTROLS / STEUERUNG	VYLISEK	1
4	30.Y302-058	1	VLOZKA / INSERT / EINLAGE	d 32	1
5	30.Y402-055 (2)	1	OSA / AXLE / ACHSE	SVARENO	1
6	30.Y602-051	2	SLOUP / POLE / SÄULE		1
7	30.Y602-054	0	STUPNICE / SCALE / SKALA	P 0,5-43	1
8	31.K107-006 (3)	1	GUMA / RUBBER / GUMMI	d35	1
9	31.T302-054	0	PRUZINA / SPRING / FEDER	d 2.24	1
10	90.001.25.029	0	SROUB IMBUS / ALLEN HEAD BOLT / IMBUSSCHRAUBE	M8X12	2
11	90.001.25.033	0	SROUB IMBUS / ALLEN HEAD BOLT / IMBUSSCHRAUBE	8x25	19
12	90.001.25.060	0	SROUB IMBUS / ALLEN HEAD BOLT / IMBUSSCHRAUBE	M12X40	4
13	94.012.001	0	RUKOJET / HANDLE / GRIFF		1
14	94.012.002	0	ZATKA / PLUG / STOPFEN		2
15	99.200.263 (4)	0	VEDENI LINEARNI / LINEAR GUIDE / LINEARE FUHRUNG	MSA 35R 1500 30/30N	1

1.ZRUS.LIN.VEDENI HSR35 L=1500 (99.200.134) A NAHR.LIN.VEDENIM HGR35R L=1500 (99.200.076). 290/ZM303 5.11.2010 SLEZACKOVA
2.ZRUS.SOUCAST 30.Y502-055 A NAHR. 30.Y402-055. 319/ZM336 9.12.2010 SLEZACKOVA
3.ZRUS.GUMA 30.Y302-157 A NAHR.31.K107-006. 125/ZM141 10.6.2011 SLEZACKOVA
4.ZRUS.LIN.VEDENI 99.200.076 A NAHR.99.200.263 . 056/ZM099 19.3.2012 SLEZACKOVA

Cislo Sestavy/Number of assembly/Nummer der Baugruppe; Verze (Ver.)/Version/Version; Nazev sestavy/Assembly title/Name der Baugruppe; Pozice (Poz.)/Position/Position;
Objednaci cislo/Purchase order number/Bestellnummer; Nazev polozky/Volume title/Name der Position; Rozmer/Stock size/Abmessung

7.20. Odměřování / Measuring / Gehrungsmessung

Cislo Sestavy 201.Y602-070

Ver. 1

Nazev sestavy ODMEROVANI/MEASURING/GEHRUNGSMESSUNG

Poz.	Objednaci cislo	Ver.	Nazev polozky	Rozmer	Ks
1	30.6114-023	0	DRZAK / HOLDER / HALTER	P 3x20	2
2	30.Y602-071	1	TYC / POLE / STANGE	d 20	1
3	30.2014-001	0	OBJIMKA / CLAMP / KLAMMERSTÜCK	Ø30-32	1
4	90.001.25.092	0	SROUB IMBUS / ALLEN HEAD BOLT / IMBUSSCHRAUBE	M6X14	4
5	94.007.001	0	SROUB / BOLT / SCHRAUBE	M5x10	1
6	99.120.002 (1)	0	PRAVITKO / RULER / SKALENBANDMAß		1

1.PRIDANO PRAVITKO 99.120.002. 138/ZM144 19.5.2010 SLEZACKOVA

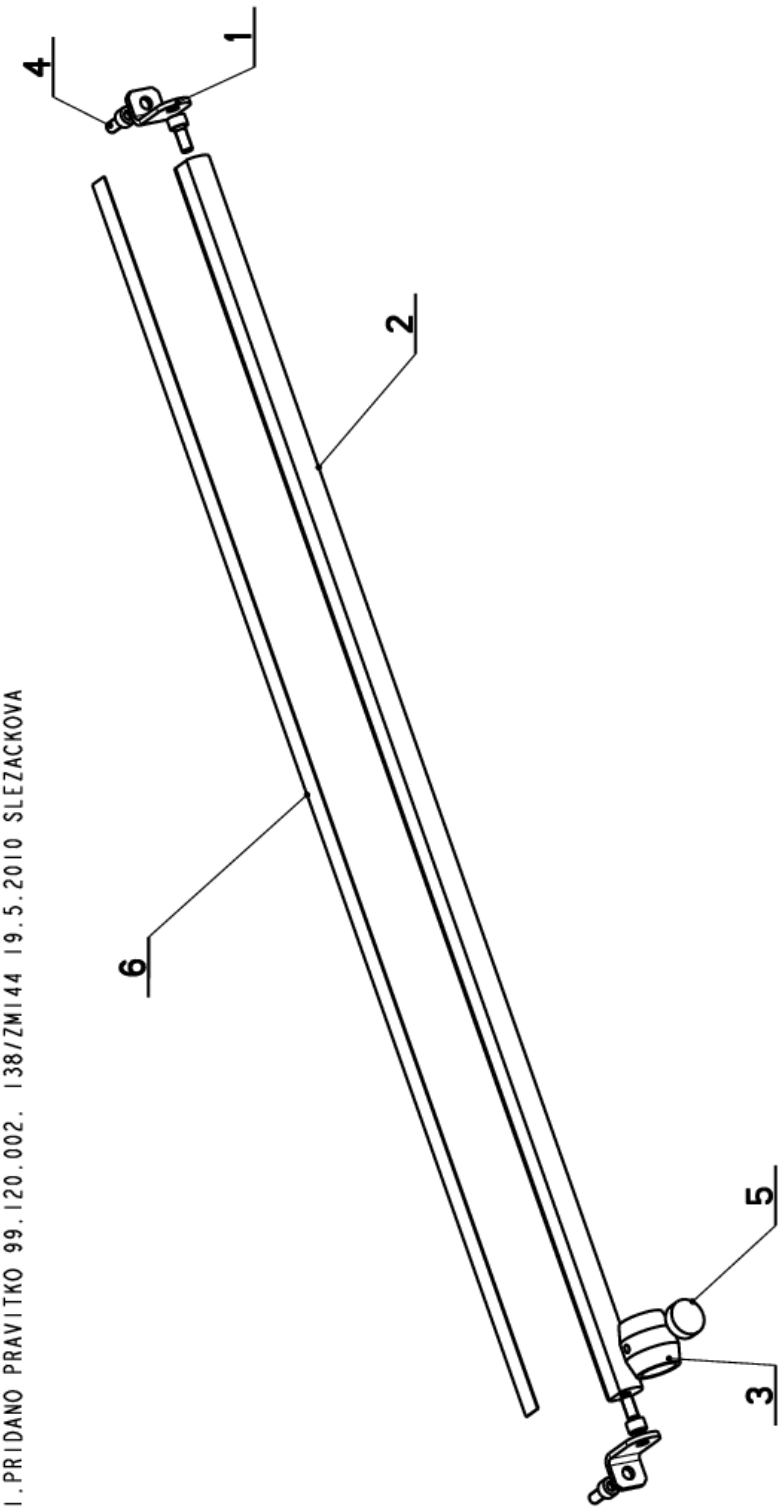

7.21. Sloup / Pole / Säule

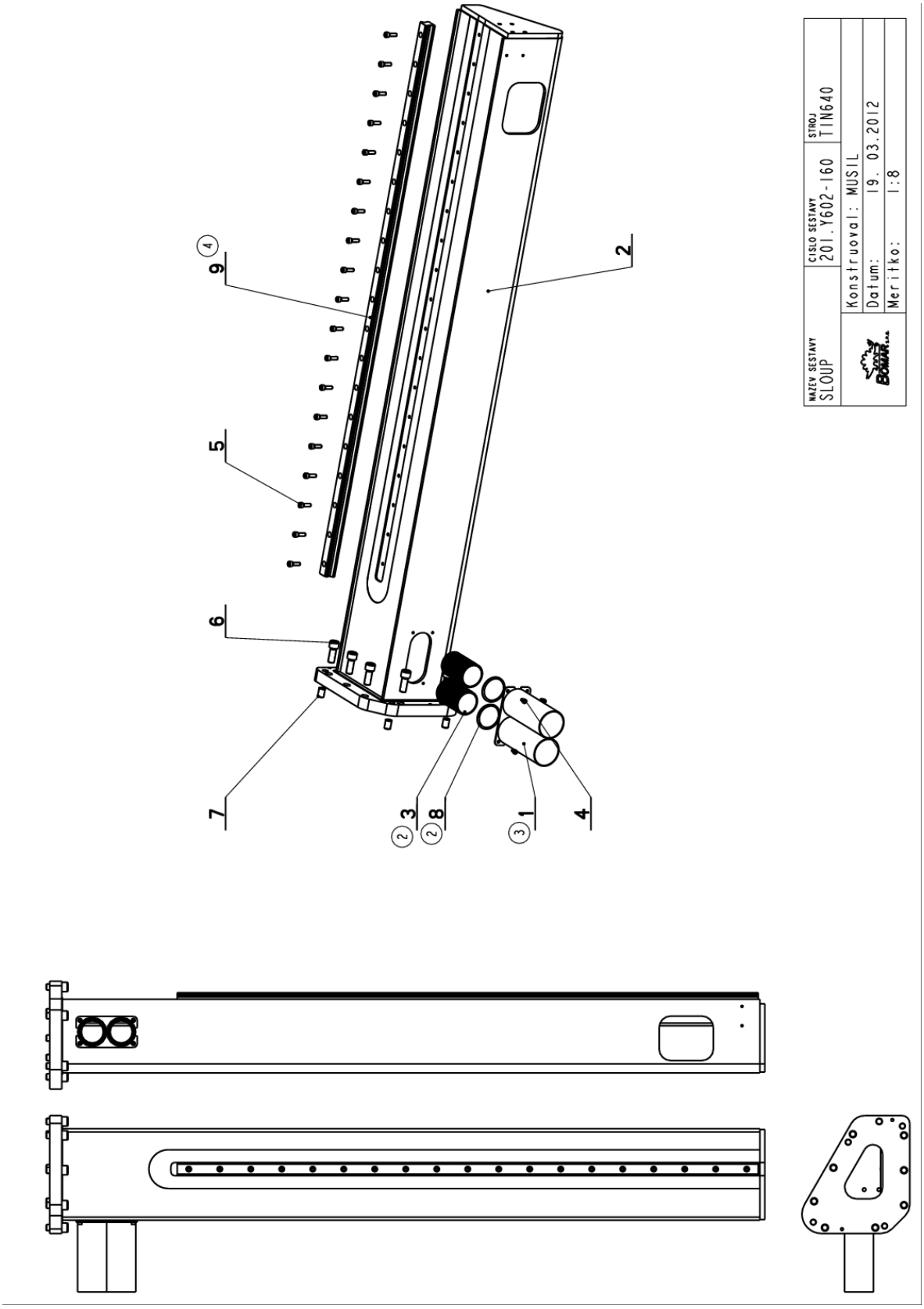

Cislo Sestavy	Ver.	Nazev sestavy
201.Y602-160	4	SLOUP/POLE/SÄULE

Poz.	Objednaci cislo	Ver.	Nazev polozky	Rozmer	Ks
1	30.V302-125 (3)	0	DRZAK / HOLDER / HALTER		1
2	30.Y602-161	2	SLOUP / POLE / SÄULE		1
3	41.001.006 (2)	0	HADICE / HOSE / SCHLAUCH	PG48	2
4	90.001.25.015	0	SROUB IMBUS / ALLEN HEAD BOLT / IMBUSSCHRAUBE	M6X10	4
5	90.001.25.033	0	SROUB IMBUS / ALLEN HEAD BOLT / IMBUSSCHRAUBE	8x25	19
6	90.001.25.086	0	SROUB IMBUS / ALLEN HEAD BOLT / IMBUSSCHRAUBE	M16X40	9
7	90.002.2D.028	0	SROUB STAVECI / ADJUSTMENT BOLT / STELLSCHRAUBE	SROUB M16x1,5x25	4
8	95.800.021 (2)	0	SEGR HRIDEL. / OUTSIDE SAFETY RING / SICHERUNGSRING AUßEN	POJISTNY KROUZEK 62	2
9	99.200.263 (4)	0	VEDENI LINEARNI / LINEAR GUIDE / LINEARE FUHRUNG	MSA 35R 1500 30/30N	1

1.ZRUS.LIN.VEDENI HSR35 L=1500 (99.200.134) A NAHR.LIN.VEDENIM HGR35R L=1500 (99.200.076). 290/ZM303 5.11.2010 SLEZACKOVA

2.ZRUS.UCHYTKA 30.Y502-162 A NAHR.30.Y502-163,ZRUS.POJ.KROUZEK 95.800.016 A NAHR.95.800.021,
ZRUS.HADICE PG36 (41.001.005) A NAHR.41.001.06) . 326/ZM017 28.1.2011 SLEZACKOVA

3.ZRUSEN DRZAK 30.Y502-163 A NAHR.30.V302-125. 290/ZM325 15.12.2011 SLEZACKOVA

4.ZRUS.LIN.VEDENI 99.200.076 A NAHR.99.200.263 . 056/ZM099 19.3.2012 SLEZACKOVA

Cislo Sestavy/Number of assembly/Nummer der Baugruppe; Verze (Ver.)/Version/Version; Nazev sestavy/Assembly title/Name der Baugruppe; Pozice (Poz.)/Position/Position;
Objednaci cislo/Purchase order number/Bestellnummer; Nazev polozky/Volume title/Name der Position; Rozmer/Stock size/Abmessung

7.23. Rameno / Shoulder / Sägerahmen

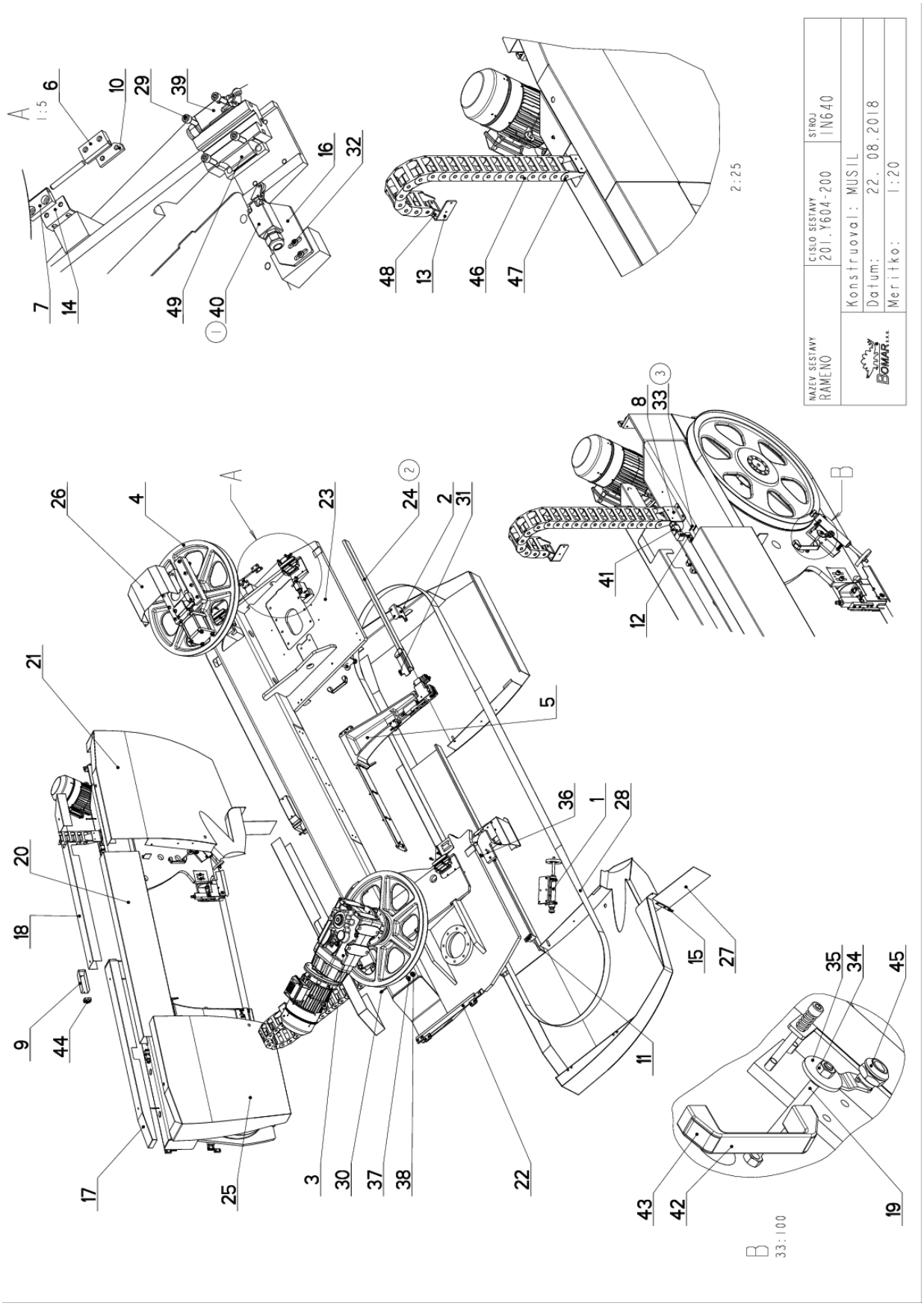

7.24. Kusovník / Piece list / Stückliste - Rameno / Shoulder / Sägerahmen

Cislo Sestavy	Ver.	Nazev sestavy
201.Y604-200	3	RAMENO/SHOULDER/SÄGERAHMEN

Poz.	Objednaci cislo	Ver.	Nazev polozky	Rozmer	Ks
1	201.6114-100	1	KARTAC / BRUSH / BÜRSTE		1
2	201.Y604-070	0	VEDENI / GUIDE / BACKENFÜHRUNG		1
3	201.Y605-100	1	POHON / DRIVE / ANTRIEB		1
4	201.Y608-100	4	NAPINANI / TENSIONING / SPANNUNG		1
5	201.Y610-000	5	VEDENI PASU / BELT GUIDE / SÄGEBANDFÜHRUNG		1
6	30.6014-109	1	PANT / HINGE / TÜRBAND		4
7	30.6014-110	1	PANT / HINGE / TÜRBAND	HR 30x12	4
8	30.7114-142	2	DRZAK / HOLDER / HALTER	P 4x100	1
9	30.8914-220	1	KRYT / COVER / ABDECKUNG	P 1.5x153	1
10	30.Y304-035	0	DESKA / BOARD / PLATTE	HR 20x5	4
11	30.Y304-038	0	ZAMEK / LOCK / SCHLOSS	P4 - 67	2
12	30.Y304-039	0	DRZAK / HOLDER / HALTER	P 3x34	2
13	30.Y404-005	0	DRZAK / HOLDER / HALTER	P 5x50	1
14	30.Y404-034	1	DRZAK / HOLDER / HALTER	L 30x20x3	1
15	30.Y504-030	0	PLECH / PLATE / BLECH	P 1x15	1
16	30.Y604-003	0	DRZAK / HOLDER / HALTER	P 5x60	1
17	30.Y604-018	0	KRYT / COVER / ABDECKUNG		1
18	30.Y604-019	0	KRYT / COVER / ABDECKUNG	P2 - 275	1
19	30.Y604-020	0	TYC ZAVITOVA / THREADED POLE / GEWINDESTANGE	M10	2
20	30.Y604-022	0	KRYT / COVER / ABDECKUNG		1
21	30.Y604-031	1	KRYT RAMENE / SHOULDER COVER / RAHMENABDECKUNG		1
22	30.Y604-035	0	DRZAK / HOLDER / HALTER	L 30x20x3	1
23	30.Y604-101	8	RAMENO / SHOULDER / SÄGERAHMEN	SVARENO	1
24	30.Y604-109 (2)	1	KRYT PASU / BELT COVER / BANDABDECKUNG		1
25	30.Y604-132	0	KRYT RAMENE / SHOULDER COVER / RAHMENABDECKUNG		1
26	30.Y604-202	0	KRYT / COVER / ABDECKUNG	P 1,5x225	1
27	31.PK02-054	0	GUMA / RUBBER / GUMMI	G2 - 206	1
28	44.103.012	0	PAS PILOVY / SAW BELT / SÄGEBAND	54x1,6M42 z=2/3	1
29	90.001.25.033	0	SROUB IMBUS / ALLEN HEAD BOLT / IMBUSSCHRAUBE	8x25	16
30	90.001.25.070	0	SROUB IMBUS / ALLEN HEAD BOLT / IMBUSSCHRAUBE	M6x90	4
31	90.001.25.092	0	SROUB IMBUS / ALLEN HEAD BOLT / IMBUSSCHRAUBE	M6X14	1
32	90.013.27.007	0	SROUB PULKULATY / HALF ROUND BOLT / HALBRUNDSCHRAUBE	M6X10	2
33	90.013.9Z.104 (3)	0	SROUB PULKULATY / HALF ROUND BOLT / HALBRUNDSCHRAUBE	M4x30	4
34	90.100.55.006	0	MATICE / NUT / MUTTER	MATICE _ M10	6

Cislo Sestavy/Number of assembly/Nummer der Baugruppe; Verze (Ver.)/Version/Version; Nazev sestavy/Assembly title/Name der Baugruppe; Pozice (Poz.)/Position/Position; Objednaci cislo/Purchase order number/Bestellnummer; Nazev polozky/Volume title/Name der Position; Rozmer/Stock size/Abmessung

7.25. Rameno / Shoulder / Sägerahmen

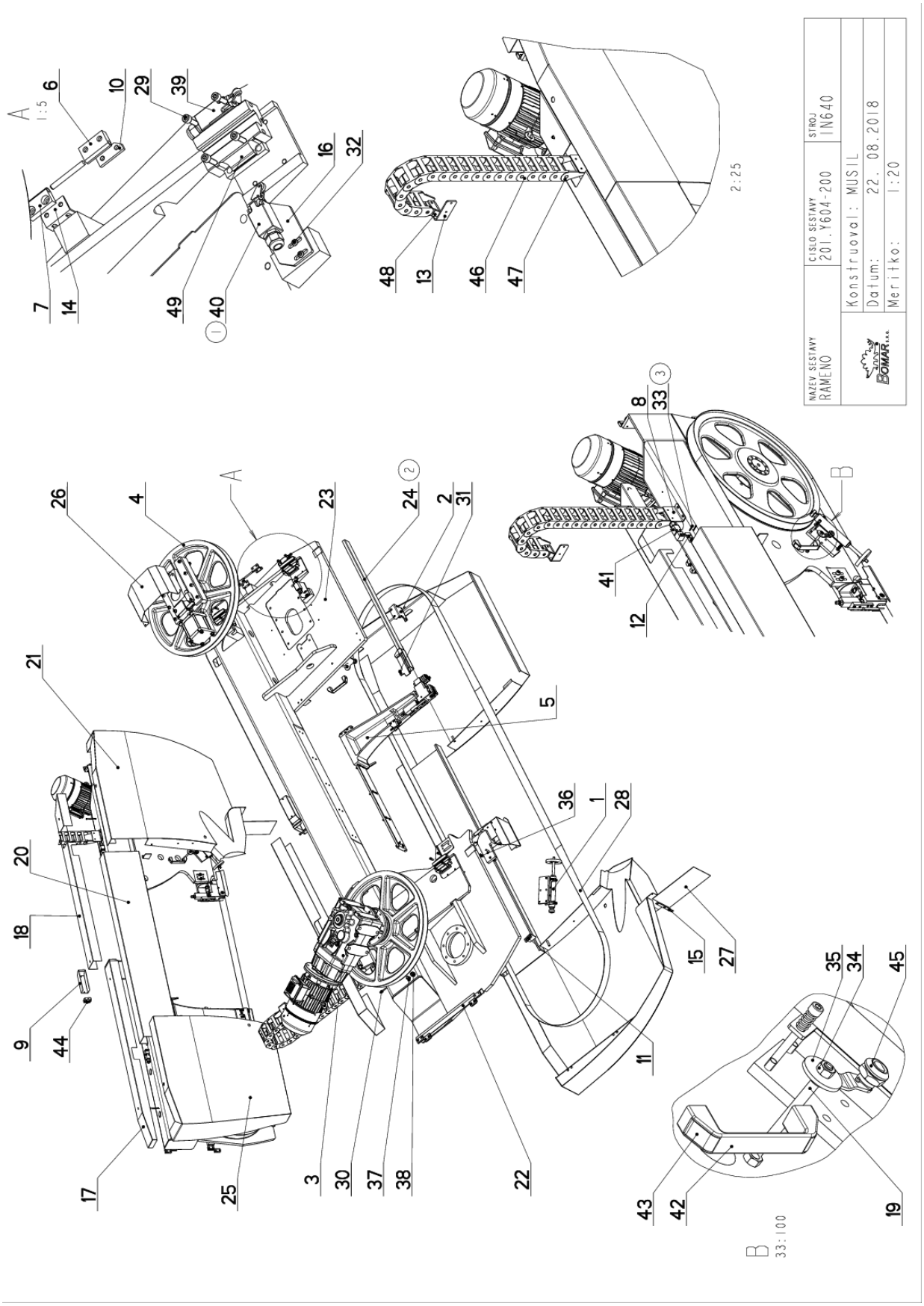

35	90.151.50.002	0	PODLOZKA / WASHER / UNTERLEGSCHEIBE	PODLOZKA 12	2
36	90.300.0Z.011	0	KOLIK VALC. KAL. / CYLINDRICAL PIN TEMPERED / ZYLINDERSTIFT GEHARTET	KOLIK 8X40	2
37	91.070.011	0	VYVODKA / BUSHING / TŮLLE	M16x1.5	1
38	91.070.012	0	VYVODKA / BUSHING / TŮLLE	M20x1.5	1
39	91.173.009	0	SPINAC KONC.S KLADK. / END SWITCH WITH PULLEY / ENDSCHALTER MIT ROLLE		1
40	91.173.009	0	SPINAC KONCOVY / END SWITCH / ENDSCHALTER	FR 605-M2	1
41	91.173.012	0	SPINAC KONCOVY / END SWITCH / ENDSCHALTER	QKS8-2xNC	2
42	94.012.001	0	RUKOJET / HANDLE / GRIFF		2
43	94.012.002	0	ZATKA / PLUG / STOPFEN		4
44	94.204.005	0	DRZAK / HOLDER / HALTER	LBG 14/14-PP	2
45	99.104.002	0	ZAMEK / LOCK / SCHLOSS	ZAMEK CINSKY	2
46	99.170.001	0	RETEZ ENERGII / ENERGY BELT / ENERGIEKETTE	0555.030.075.100	19
47	99.173.001	0	RETEZ ENERGII / ENERGY BELT / ENERGIEKETTE	KONCOVKA VNEJ	1
48	99.173.002	0	RETEZ ENERGII / ENERGY BELT / ENERGIEKETTE	KONCOVKA VNIT	1
49	99.201.056 (1)	0	VOZIK LINEARNIHO VEDENI / LINEAR GUIDE CART / LINEARFUHRUNGSWAGEN	MSA35ESSFON	4

1.ZRUS.VOZIK LIN.VEDENI 99.201.011 A NAHR 99.201.056 . 056/ZM099 19.3.2012 SLEZACKOVA

2.ZRUSEN KRYT PASU 30.Y604-009 A NAHR.30.Y604-109. 074/ZM130 3.6.2014 SLEZACKOVA

3.PRID. 4xSROUB M4x30 90.013.9Z.104. 171/ZM290 22.8.2018 SZABARI

Cisla Sestavy/Number of assembly/Nummer der Baugruppe; Verze (Ver.)/Version/Version; Nazev sestavy/Assembly title/Name der Baugruppe; Pozice (Poz.)/Position/Position; Objednaci cislo/Purchase order number/Bestellnummer; Nazev polozky/Volume title/Name der Position; Rozmer/Stock size/Abmessung

7.27. Kartáč / Brush / Bürste

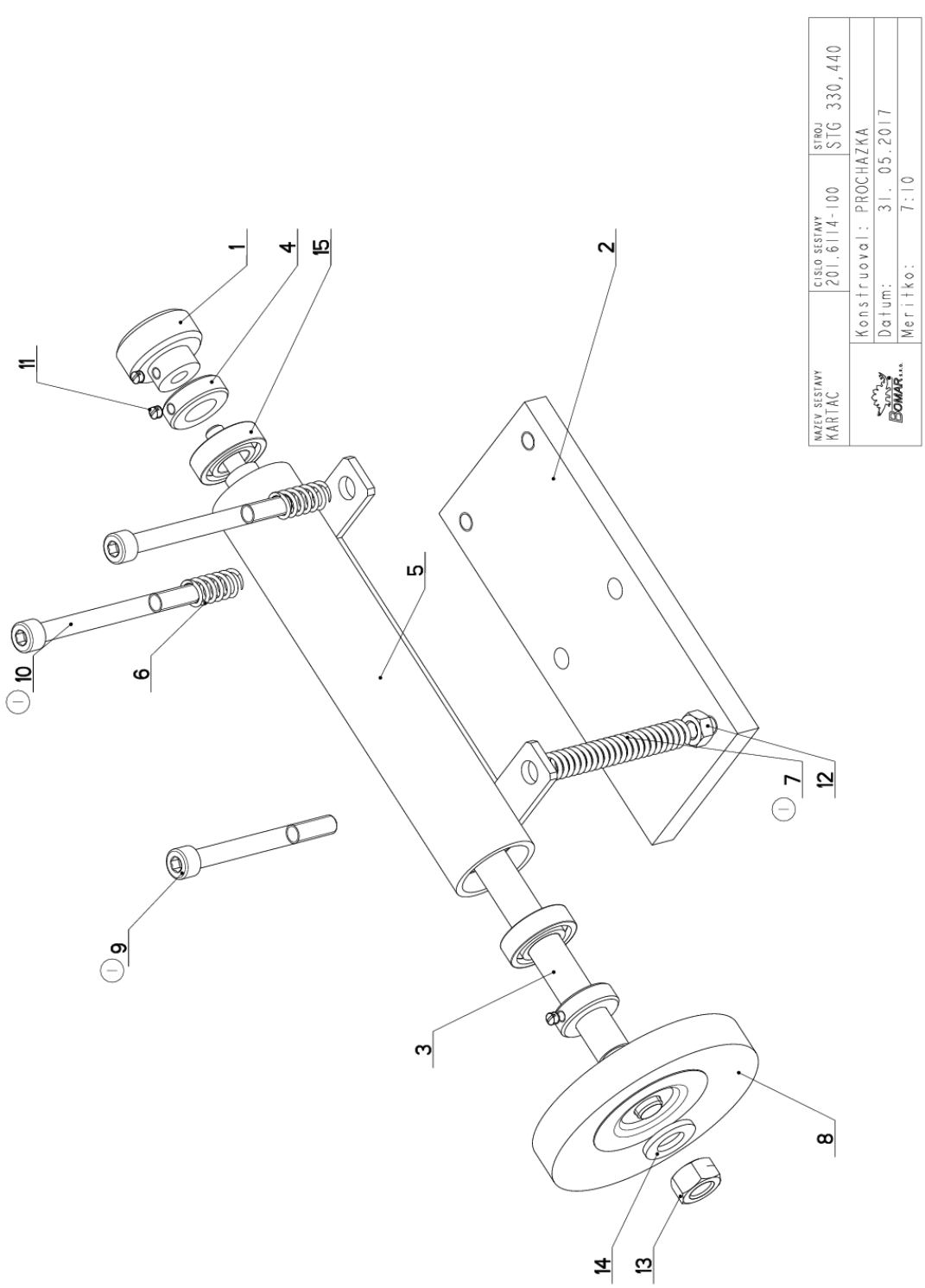

7.28. Kusovník / Piece list / Stückliste - Kartáč / Brush / Bürste

Cislo Sestavy	Ver.	Nazev sestavy
201.6114-100	1	KARTAC/BRUSH/BÜRSTE

Poz.	Objednaci cislo	Ver.	Nazev polozky	Rozmer	Ks
1	201.0814-204	0	KOLECKO / WHEEL / ROLLE	SESTAVA	1
2	30.6114-105	1	DESKA / BOARD / PLATTE	HR 80x12	1
3	30.6114-116	0	HRIDEL / SHAFT / WELLE	D 15	1
4	30.6114-119	0	KROUZEK / RING / RING	d 28	2
5	30.6114-128	2	DRZAK / HOLDER / HALTER		1
6	31.1506-115	0	PRUZINA / SPRING / FEDER	1.6x12x25x7.5	2
7	31.2107-207 (1)	0	PRUZINA / SPRING / FEDER	2x12x74x22,5	1
8	49.250.017	0	KARTAC / BRUSH / BÜRSTE	SPB 100x12	1
9	90.001.25.067 (1)	0	SROUB IMBUS / ALLEN HEAD BOLT / IMBUSSCHRAUBE	M8X80	1
10	90.001.25.078 (1)	0	SROUB IMBUS / ALLEN HEAD BOLT / IMBUSSCHRAUBE	M8X90	2
11	90.003.20.001	0	SROUB STAVECI / ADJUSTMENT BOLT / STELLSCHRAUBE	SROUB M5X6	3
12	90.100.55.005	0	MATICE / NUT / MUTTER	MATICE _ M8	1
13	90.100.55.007	0	MATICE / NUT / MUTTER	MATICE _ M12	1
14	90.150.50.007	0	PODLOZKA / WASHER / UNTERLEGSCHEIBE	PODLOZKA 13	1
15	95.001.006	0	LOZISKO / BEARING / LAGER	6002 2RS	2

1.ZRUS.SROUB M8x70(90.001.25.095) NAHR.M8x80(90.001.25.067), ZRUS.SROUB M8x80(90.001.25.067) NAHR. M8x90(90.001.25.078), ZRUS.PRUZINA 31.2107-206 NAHR. PRUZINOU 31.2107-207. 134/ZM192 SLEZACKOVA

Cislo Sestavy/Number of assembly/Nummer der Baugruppe; Verze (Ver.)/Version/Version; Nazev sestavy/Assembly title/Name der Baugruppe; Pozice (Poz.)/Position/Position; Objednaci cislo/Purchase order number/Bestellnummer; Nazev polozky/Volume title/Name der Position; Rozmer/Stock size/Abmessung

7.29. Kolečko / Wheel / Rolle

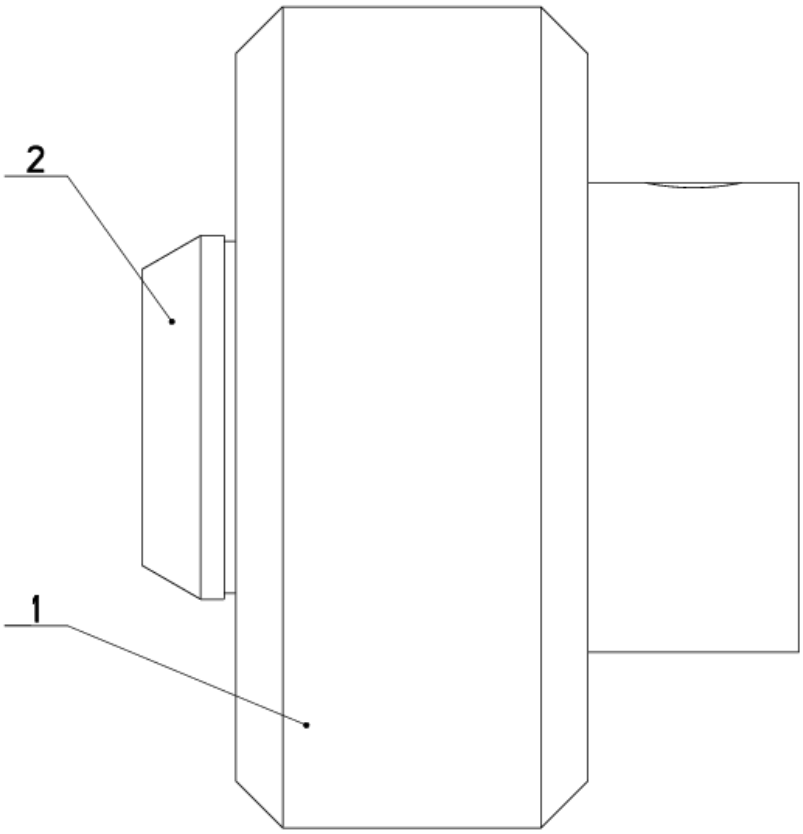

NAZEV SESTAVY	CISLO SESTAVY	STROJ
KOLECKO	201.0814-204	STG440

BOMAR	Konstruoval:
	Datum: 20. 04.2018
	Meritko: 4:1

7.30. Kusovník / Piece list / Stückliste - Kolečko / Wheel / Rolle

Cislo Sestavy	Ver.	Nazev sestavy
201.0814-204	0	KOLECKO/WHEEL/ROLLE

Poz.	Objednaci cislo	Ver.	Nazev polozky	Rozmer	Ks
1	30.0814-204.1	0	KOLECKO / /	d 35	1
2	30.0814-204.2	1	NABOJ / /	D 20	1

Cislo Sestavy/Number of assembly/Nummer der Baugruppe; Verze (Ver.)/Version/Version; Nazev sestavy/Assembly title/Name der Baugruppe; Pozice (Poz.)/Position/Position; Objednaci cislo/Purchase order number/Bestellnummer; Nazev polozky/Volume title/Name der Position; Rozmer/Stock size/Abmessung

7.31. Vedení / Guide / Backenführung

Cislo Sestavy	Ver.	Nazev sestavy
201.Y604-070	0	VEDENI/GUIDE/BACKENFÜHRUNG

Poz.	Objednaci cislo	Ver.	Nazev polozky	Rozmer	Ks
1	30.Y604-071	0	DRZAK / HOLDER / HALTER	P3 - 100	1
2	90.001.25.016	0	SROUB IMBUS / ALLEN HEAD BOLT / IMBUSSCHRAUBE	M6X12	2
3	90.011.27.024	0	SROUB ZAPUSTNY / COUNTERSINK BOLT / SENKSCHRAUBE	SROUB M5X20	2
4	90.100.55.003	0	MATICE / NUT / MUTTER	MATICE - M5	2
5	90.163.00.006	0	DISTANC / DISTANCE / DISTANZ	TR 10/5.3	2
6	94.101.029	0	ZATKA / PLUG / STOPFEN	PRO IMBUS M8	6

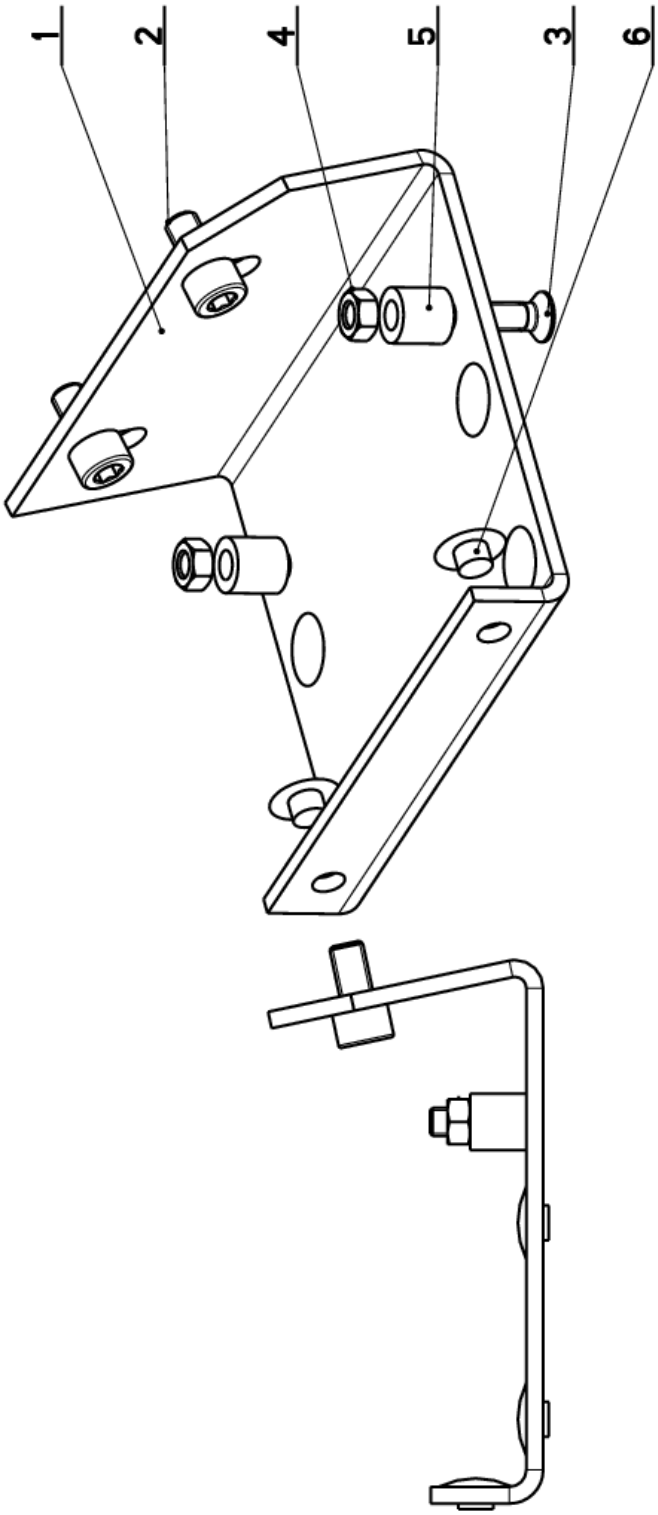

7.32. Pohon / Drive / Antrieb

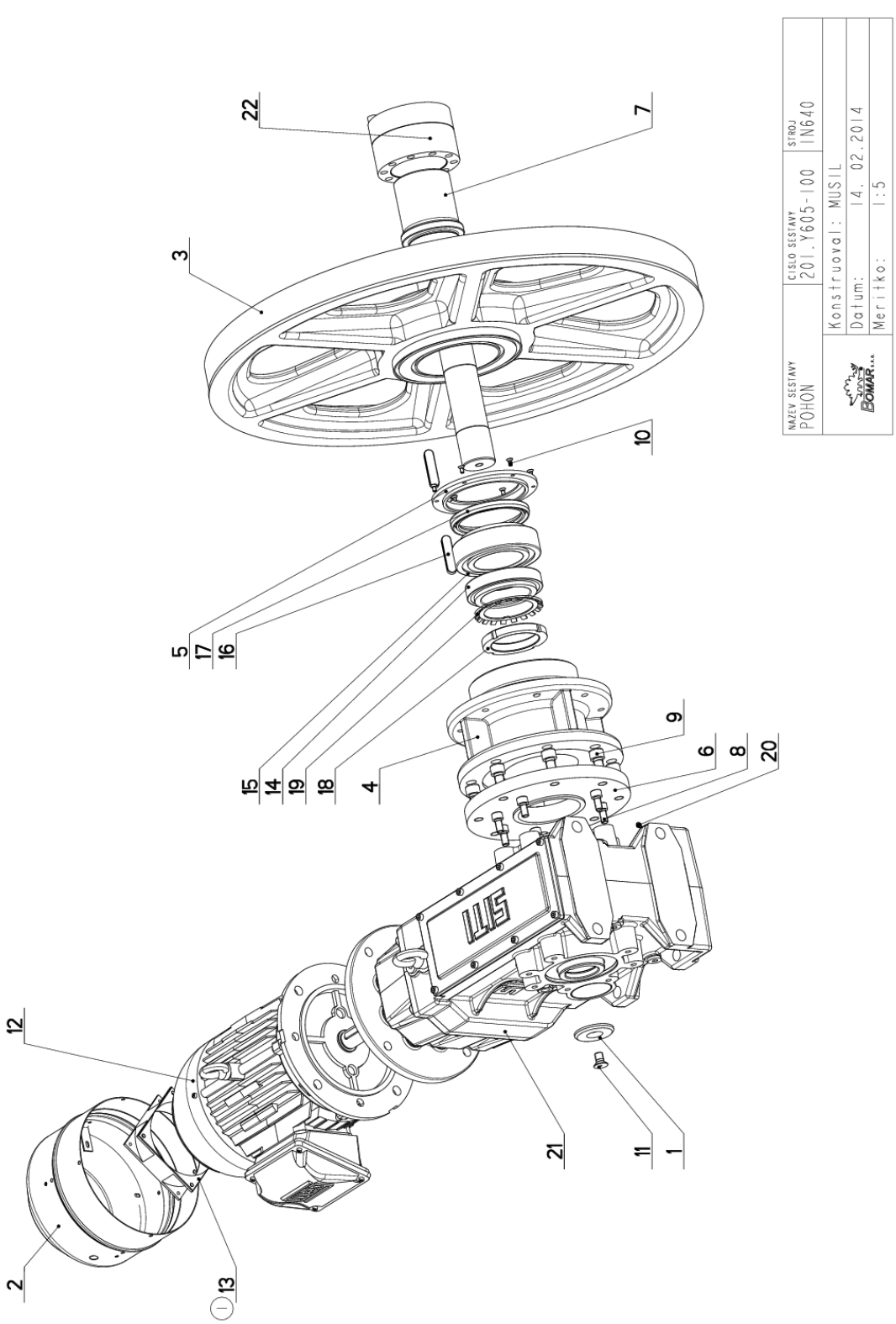

7.33. Kusovník / Piece list / Stückliste - Pohon / Drive / Antrieb

Cislo Sestavy	Ver.	Nazev sestavy
201.Y605-100	1	POHON/DRIVE /ANTRIEB

Poz.	Objednaci cislo	Ver.	Nazev polozky	Rozmer	Ks
1	30.0804-009	2	PODLOZKA / WASHER / UNTERLEGSCHEIBE	d 60	1
2	30.4304-018	4	VENTILATOR / VENTILATOR / VENTILATOR		1
3	30.7504-007	2	KOLO HNACI / DRIVE WHEEL / ANTRIEBSRAD	KOLO	1
4	30.Y605-001	1	PRIRUBA / FLANGE / FLANSCHE		1
5	30.Y605-006	0	VIKO / COVER / DECKEL	P 15 -160	1
6	30.Y605-103	0	KROUZEK DISTANCNI / DISTANCE RING / DISTANZRING	P 25x250	1
7	30.Y605-104	0	HRIDEL / SHAFT / WELLE	d 100	1
8	90.001.25.046	0	SROUB IMBUS / ALLEN HEAD BOLT / IMBUSSCHRAUBE	M10X20	7
9	90.001.25.107	0	SROUB IMBUS / ALLEN HEAD BOLT / IMBUSSCHRAUBE	M14X35	8
10	90.011.27.003	0	SROUB ZAPUSTNY / COUNTERSINK BOLT / SENKSCHRAUBE	SROUB M5X10	6
11	90.011.27.009	0	ZAPUSTNY IMBUS / COUNTERSINK BOLT / SENKSCHRAUBE	SROUB M12X20	1
12	91.001.145	0	ELEKTROMOTOR / ELECTRIC MOTOR / ELEKTROMOTOR	WEGMHERAXX112MD4	1
13	91.015.126 (1)	0	VENTILATOR / VENTILATOR / VENTILATOR	VENTILATOR RDH1238,B2	1
14	95.300.028	0	LOZISKO KUZELIK / BEARING / LAGER	32015AX	1
15	95.300.029	0	LOZISKO KUZELIK / BEARING / LAGER	33215A	1
16	95.810.032	0	PERO TESNE / SPRING / FEDER	PERO 14X9X60	2
17	95.830.047	0	GUFERO / GIT SEAL / DICHTUNG	GUFERO 95X120X12	1
18	95.850.015	0	MATICE KM / KM NUT / KM-MUTTER	MATICE KM15	1
19	95.855.016	0	PODLOZKA / WASHER / UNTERLEGSCHEIBE	POJISTNA PODLOZKA MB15	1
20	95.860.001	0	HLAVICE MAZACI / HEAD / KOPF	KM5	1
21	99.003.021	0	PREVODOVKA KUZELOCEL / CONICAL TRANSMISSION / KEGELRADGETRIEBE	MBH100C PAM112	1
22	99.710.013	0	SPOJKA / JOINT / KUPPLUNG	85x125	1

1.ZRUS.VENTILATOR 91.015.100 A NAHR.91.015.126. 074/ZM025 14.2.2014 SLEZACKOVA

Cislo Sestavy/Number of assembly/Nummer der Baugruppe; Verze (Ver.)/Version/Version; Nazev sestavy/Assembly title/Name der Baugruppe; Pozice (Poz.)/Position/Position; Objednaci cislo/Purchase order number/Bestellnummer; Nazev polozky/Volume title/Name der Position; Rozmer/Stock size/Abmessung

7.34. Napínání / Tensioning / Spannung

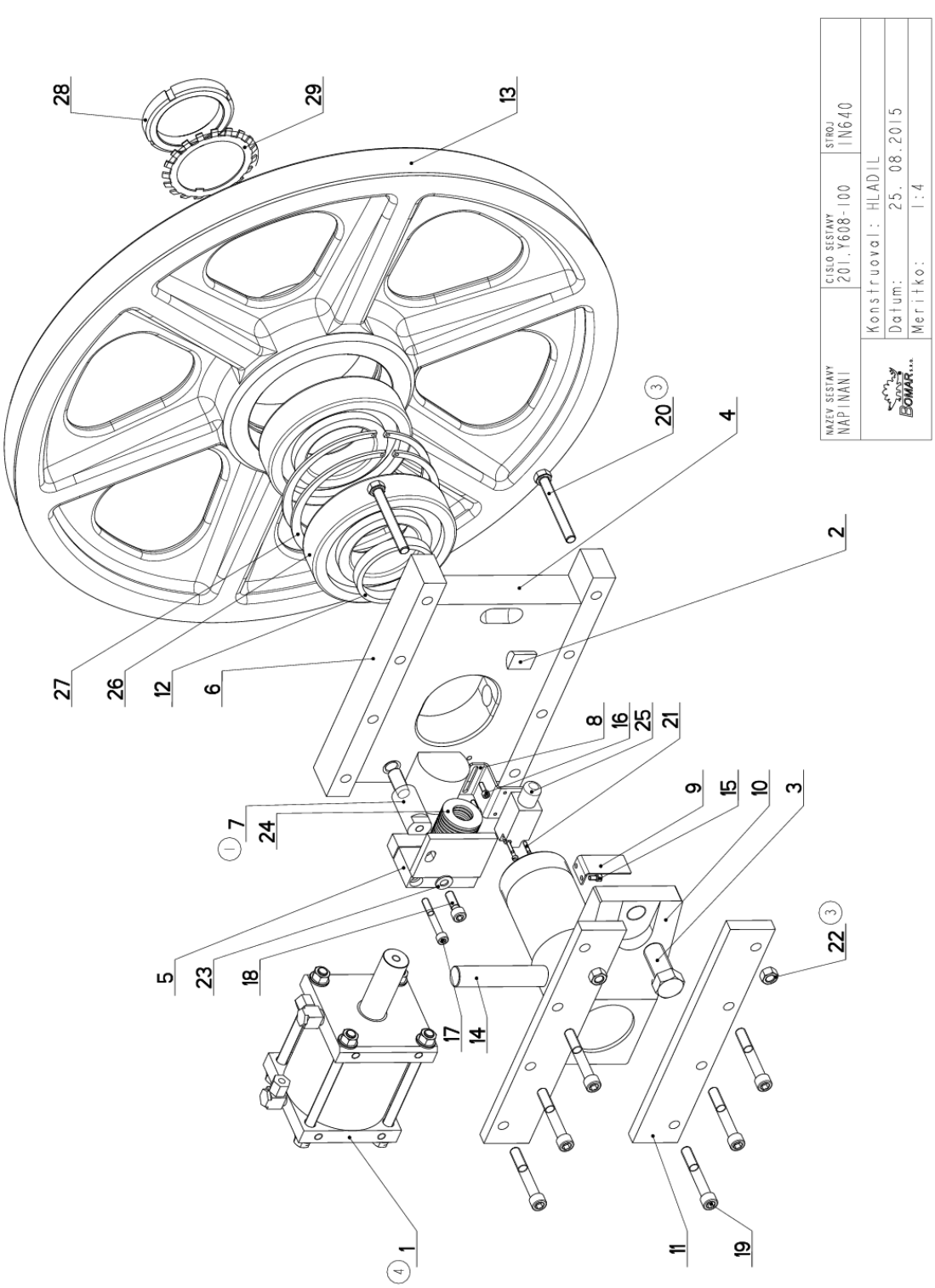

7.35. Kusovník / Piece list / Stückliste - Napínání / Tensioning / Spannung

Cislo Sestavy	Ver.	Nazev sestavy
201.Y608-100	4	NAPINANI/TENSIONING/SPANNUNG

Poz.	Objednaci cislo	Ver.	Nazev polozky	Rozmer	Ks
1	201.6707-400 (4)	3	VALEC NAPINACI / TENSIONING CYLINDER / SPANNZYLINDER		1
2	30.6208-003	0	CEP / LUG / BOLZEN	d 25	1
3	30.6208-004	0	SROUB / BOLT / SCHRAUBE	TYC 32	1
4	30.6208-102	0	KOSTKA NAPINANI / TENSIONING CUBE / BANDSPANNUNGSWÜRFEL		1
5	30.6208-104	1	TRMEN / BINDER / BÜGEL		1
6	30.6208-105	2	LISTA / TRIM / LEISTE	TYC 50x30	2
7	30.6208-109 (1)	0	DORAZ / STOP PIECE / ANSCHLAG	D 30	1
8	30.6708-303	1	DRZAK / HOLDER / HALTER	P 3x50	1
9	30.6708-304	0	DORAZ / STOP PIECE / ANSCHLAG	P 2x20	1
10	30.7508-001	3	CEP NAPINANI / TENSIONING LUG / SPANNUNGSBOLZEN		1
11	30.7508-004	2	LISTA / TRIM / LEISTE	TYC 60x15	2
12	30.7508-005	3	KROUZEK / RING / RING	TR 102x10	2
13	30.7508-006	3	KOLO NAPINACI / TENSIONING WHEEL / UMLENKRAD	ODLITEK	1
14	30.7508-007	0	CEP / LUG / BOLZEN	TYC 25j6	1
15	90.001.25.007	0	SROUB IMBUS / ALLEN HEAD BOLT / IMBUSSCHRAUBE	M5X10	2
16	90.001.25.009	0	SROUB IMBUS / ALLEN HEAD BOLT / IMBUSSCHRAUBE	M5X16	2
17	90.001.25.040	0	SROUB IMBUS / ALLEN HEAD BOLT / IMBUSSCHRAUBE	M8X60	1
18	90.001.25.048	0	SROUB IMBUS / ALLEN HEAD BOLT / IMBUSSCHRAUBE	M10X30	1
19	90.001.25.065	0	SROUB IMBUS / ALLEN HEAD BOLT / IMBUSSCHRAUBE	M12X80	6
20	90.005.55.056 (3)	0	SROUB 6HRANNY / 6 SIDED BOLT / SECHSKANTSCHRAUBE	SROUB M12X100	2
21	90.012.50.006	0	SR. S VALC. HLAV. / ROLLER BOLT / ZYLINDERSCHRAUBE	SROUB M4X25	2
22	90.100.55.007 (3)	0	MATICE / NUT / MUTTER	MATICE _ M12	2
23	90.150.50.006	0	PODLOZKA / WASHER / UNTERLEGSCHEIBE	PODLOZKA 10,5	1
24	90.350.02.004	0	TAL.PRUZINA DIN 2093 A / DISC SPRING / TELLERFEDER	50X25.4X3	12
25	91.173.007	0	SPINAC KONCOVY / END SWITCH / ENDSCHALTER	-RIWK	1
26	95.001.053	0	LOZISKO / BEARING / LAGER	6317A	2
27	95.801.033	0	KROUZEK POJIST.VNITR / INSIDE SAFETY RING / SICHERUNGSRING INNEN	POJISTNY KROUZEK 180	2
28	95.850.012	0	MATICE KM / KM NUT / KM-MUTTER	MATICE KM17	1
29	95.855.011	0	PODLOZKA / WASHER / UNTERLEGSCHEIBE	POJISTNA PODLOZKA MB17	1

1.ZRUS.DORAZOVY SROUB 30.6208-103 A NAHR.30.6208-109. 284/ZM321 8.12.2011 SLEZACKOVA
2.ZRUS.VALEC 201.6707-400 A NAHR.221.Y607-100. 216/ZM210 25.7.2013 SLEZACKOVA
3.ZRUS.2xSROUB IMBUS M12x80(90.001.25.065) A NAHR.2xSROUB 6HR M12x100(90.005.55.056) A MATICE M12(90.100.55.007). 164/ZM187 30.7.2015 SLEZACKOVA
4.ZRUS.VALEC 221.Y607-100 A NAHR.201.6707-400. 185/ZM274 4.10.2017 SLEZACKOVA

Cislo Sestavy/Number of assembly/Nummer der Baugruppe; Verze (Ver.)/Version/Version; Nazev sestavy/Assembly title/Name der Baugruppe; Pozice (Poz.)/Position/Position; Objednaci cislo/Purchase order number/Bestellnummer; Nazev polozky/Volume title/Name der Position; Rozmer/Stock size/Abmessung

7.36. Válec napínací / Tensioning cylinder / Spannzylinder

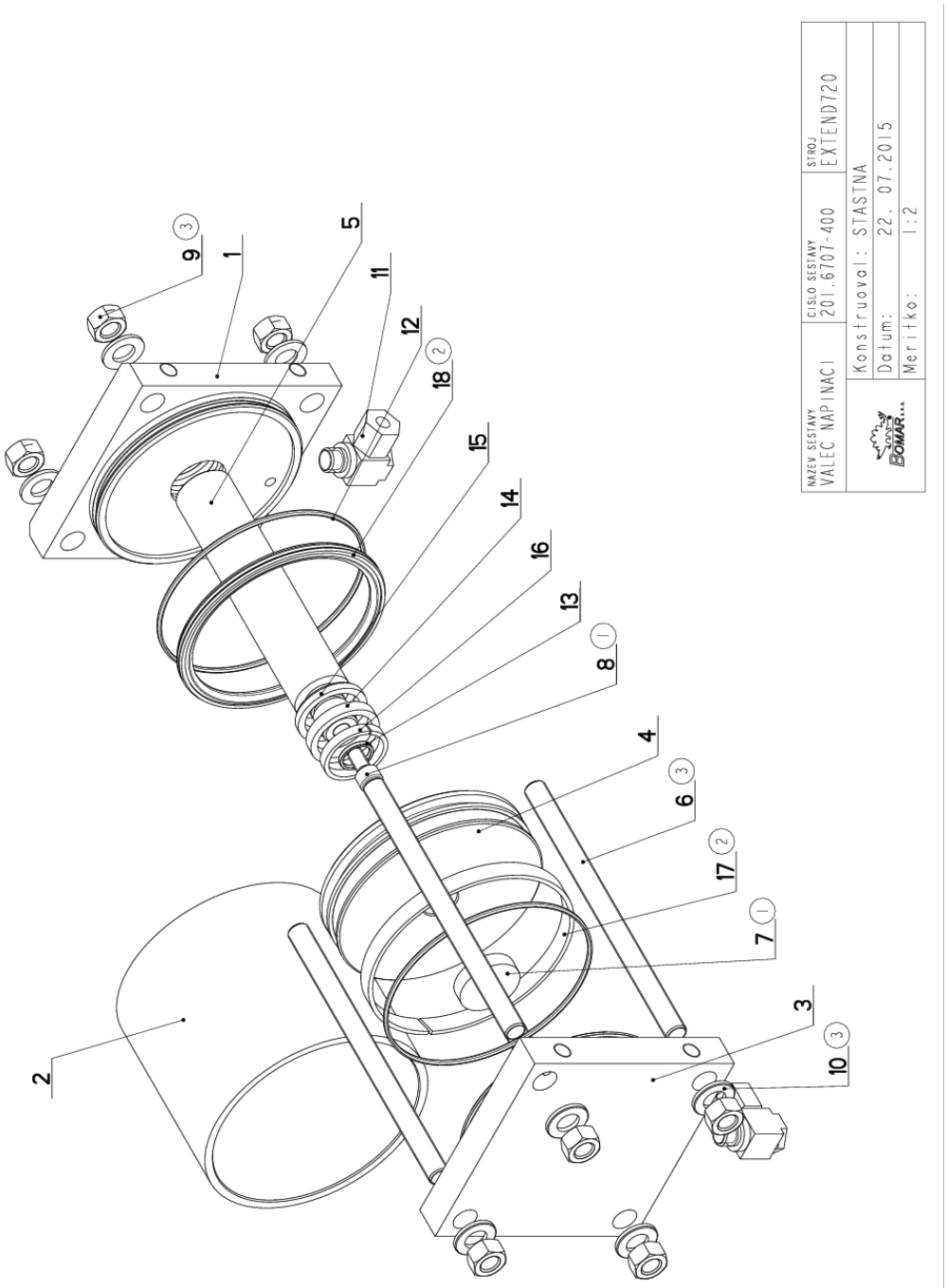

Cislo Sestavy	Ver.	Nazev sestavy
201.6707-400	3	VALEC NAPINACI/TENSIONING CYLINDER/SPANNZYLINDER

Poz.	Objednaci cislo	Ver.	Nazev polozky	Rozmer	Ks
1	30.6707-401	2	VIKO / COVER / DECKEL	HR 130x40	1
2	30.6707-402	0	VALEC / ROLLER / ZYLINDER	TRUBKA 130/120	1
3	30.6707-403	2	VIKO / COVER / DECKEL	HR 130x30	1
4	30.6707-404	1	PIST / PISTON / KOLBEN	d 125	1
5	30.6707-405	1	PISTNICE / PISTON ROD / KOLBENSTANGE	TYC 32	1
6	30.6707-407 (3)	1	TYC ZAVITOVA / THREADED POLE / GEWINDESTANGE	TYC M12	4
7	30.K407-005 (1)	1	PODLOZKA / WASHER / UNTERLEGSCHEIBE	P 8x35	1
8	90.001.25.031 (1)	0	SROUB IMBUS / ALLEN HEAD BOLT / IMBUSSCHRAUBE	8x16	1
9	90.100.25.006 (3)	0	MATICE / NUT / MUTTER	MATICE _ M12 _PEVNOSTNI	8
10	90.150.50.013 (3)	0	PODLOZKA / WASHER / UNTERLEGSCHEIBE	PODLOZKA B13	8
11	92.003.001	0	SROUBENI UHLOVE / ANGLE BOLTING / WINKELVERSCHRAUBUNG	P-RSWS-08LR	2
12	96.001.031	0	KROUZEK O STATICKY / STATIC O RING / O-RING STATISCH	114X3	2
13	96.002.007	0	KROUZEK O DYNAMICKY / DYNAMIC O RING / O-RING DYNAMISCH	16x2 NBR 70SH	1
14	96.042.007	0	TESNENI / SEALING / DICHTUNG	32x40x6.3	1
15	96.060.009	0	KROUZEK STIRACI / SCRAPER RING / ABSTREIFRING	32x40x5x6	1
16	96.084.003	0	KROUZEK VODICI / LEAD RING / FÜHRUNGSRING	GR 6500320	1
17	96.084.014 (2)	0	KROUZEK VODICI / LEAD RING / FÜHRUNGSRING	Páska	1
18	96.900.028 (2)	0	TESNENI KOMBINOVANE / COMBINATION SEALING / KOMBIDICHTUNG		1

1.ZRUS.PODLOZKA 8 90.151.50.005 A NAHR. PODLOZKOU 30.K407-005, ZRUS.SROUB M8x10A NAHR. SROUBEM M8x16 90.001.25.031. 191/ZM224 4.6.2007 SLEZACKOVA

2.ZRUS."O" KROUZEK 96.002.044 A NAHRAZENO TESNENI KOMBINOVANE 96.900.028. ZRUS.PASKA 95.780.001 A NAHR. 96.084.014.
316/ZM337 27.8.2007 SLEZACKOVA

3.ZRUS.TYC 30.6707-406 A NAHR.30.6707-407, ZRUS.PODLOZKA 90.150.50.006 A NAHR.90.150.50.007, ZRUS.MATICE 90.100.55.006 A NAHR.90.100.25.006. 37/ZM098 4.5.2011 SLEZACKOVA

Cislo Sestavy/Number of assembly/Nummer der Baugruppe; Verze (Ver.)/Version/Version; Nazev sestavy/Assembly title/Name der Baugruppe; Pozice (Poz.)/Position/Position; Objednaci cislo/Purchase order number/Bestellnummer; Nazev polozky/Volume title/Name der Position; Rozmer/Stock size/Abmessung

7.38. Vedení pásu / Belt guide / Sägebandführung

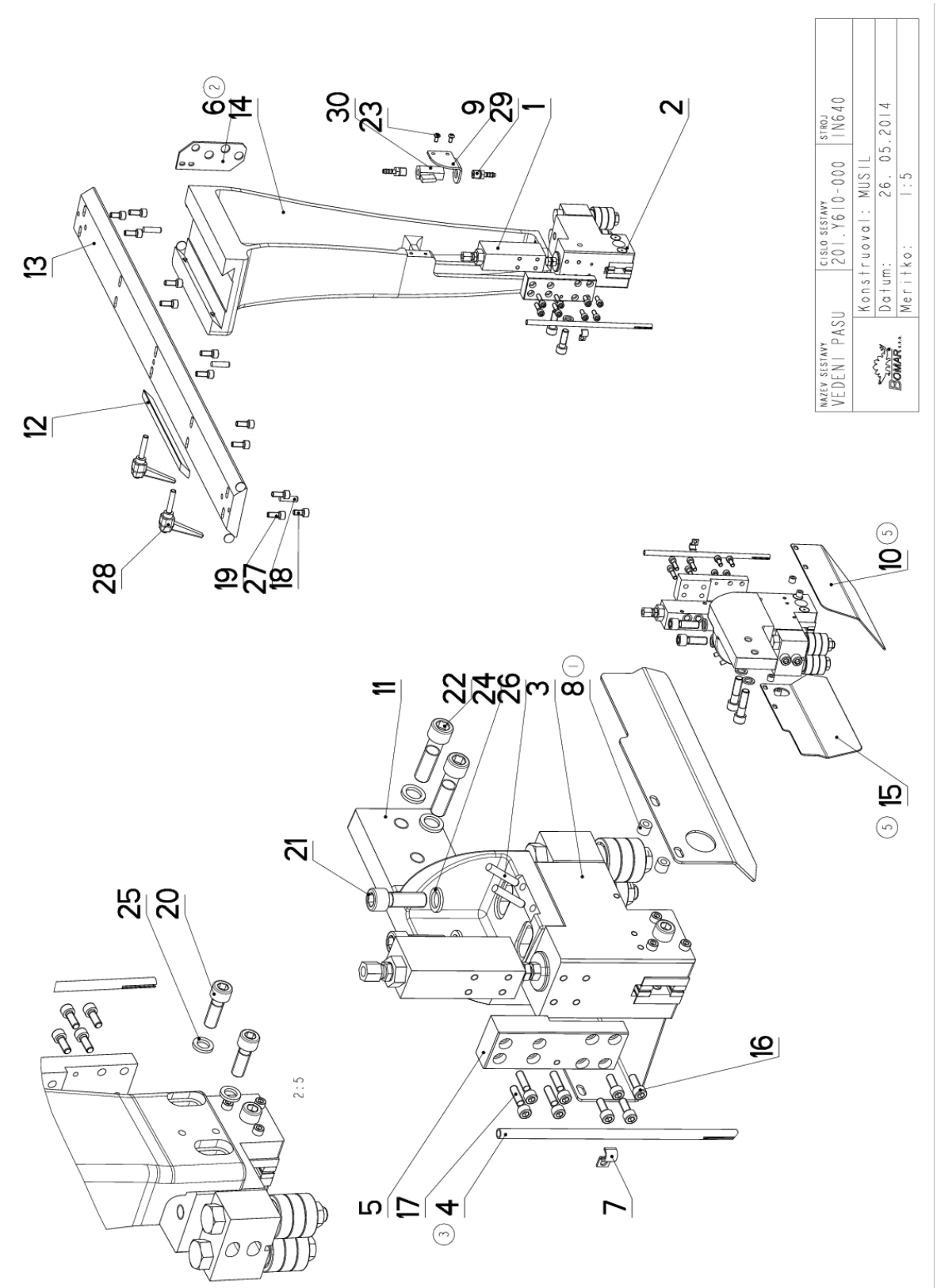

7.39. Kusovník / Piece list / Stückliste - Vedení pásu / Belt guide / Sägebandführung

Cislo Sestavy	Ver.	Nazev sestavy
201.Y610-000	5	VEDENI PASU/BELT GUIDE/SÄGEBANDFÜHRUNG

Poz.	Objednaci cislo	Ver.	Nazev polozky	Rozmer	Ks
1	201.6816-100	0	KOSTKA REGULACE / REGULATION CUBE / REGELUNGSWÜRFEL		2
2	201.Y610-100	0	KOSTKA VODICI / LEAD CUBE / FÜHRUNGSKLOTZ		1
3	201.Y610-200	0	KOSTKA VODICI / LEAD CUBE / FÜHRUNGSKLOTZ		1
4	30.6010-315 (3)	0	TRUBKA / TUBE / ROHR	TR 8x 1	2
5	30.6016-002	0	DESKA / BOARD / PLATTE	HR 40x20	2
6	30.8910-004 (2)	1	DRZAK / HOLDER / HALTER	P 3x50	1
7	30.9010-003	0	DRZAK / HOLDER / HALTER	P1.5x10	2
8	30.Y310-007 (1)	0	KROUZEK / RING / RING	TR 10x2,5	4
9	30.Y310-008	0	DRZAK / HOLDER / HALTER	P3-50	1
10	30.Y410-108 (5)	0	KRYT PASU / BELT COVER / BANDABDECKUNG	P 2x108	1
11	30.Y510-005	1	DRZAK / HOLDER / HALTER	-	1
12	30.Y510-011	0	LISTA / TRIM / LEISTE	HR 30x10	1
13	30.Y610-003	0	LISTA / TRIM / LEISTE	HR 90x20	1
14	30.Y610-104	2	KONZOLA / CONSOLE / KONSOLE		1
15	30.Y610-107 (5)	0	KRYT PASU / BELT COVER / BANDABDECKUNG	P 2x108	1
16	90.001.25.017	0	SROUB IMBUS / ALLEN HEAD BOLT / IMBUSSCHRAUBE	M6X16	8
17	90.001.25.019	0	SROUB IMBUS / ALLEN HEAD BOLT / IMBUSSCHRAUBE	M6X25	8
18	90.001.25.031	0	SROUB IMBUS / ALLEN HEAD BOLT / IMBUSSCHRAUBE	8x16	2
19	90.001.25.032	0	SROUB IMBUS / ALLEN HEAD BOLT / IMBUSSCHRAUBE	8x20	10
20	90.001.25.048	0	SROUB IMBUS / ALLEN HEAD BOLT / IMBUSSCHRAUBE	M10X30	2
21	90.001.25.059	0	SROUB IMBUS / ALLEN HEAD BOLT / IMBUSSCHRAUBE	M12X35	2
22	90.001.25.061	0	SROUB IMBUS / ALLEN HEAD BOLT / IMBUSSCHRAUBE	M12X45	2
23	90.013.27.003	0	SROUB / BOLT / SCHRAUBE	M5X10	2
24	90.163.00.003	0	PODLOZKA / WASHER / UNTERLEGSCHEIBE	NORD-LOCK	4
25	90.163.00.004	0	PODLOZKA / WASHER / UNTERLEGSCHEIBE	NORD-LOCK	2
26	90.300.0Z.007	0	KOLIK VALC. KAL. / CYLINDRICAL PIN TEMPERED / ZYLINDERSTIFT GEHARTET	KOLIK 6X36	2
27	90.302.0Z.002	0	KUZEL. KOLIK S ZAV. / TAPER PIN + THREAD / KEGELBOLZEN + GEWINDE	KOLIK 8X30	3
28	94.008.003	0	PAKA UPINACI / ATTACHMENT LEVER / SPANNHEBEL	M8x40	2
29	94.202.002	0	REDUKCE / REDUCTION / ADAPTOR / REDUKTION	REDUKCE 6/R1/4"	2
30	99.260.003	0	VENTIL / VALVE / VENTIL	1/4"	1

1. PRID.KRYTY 30.Y510-006,30.Y510-008,KROUZEK 30.Y310-007. 155/ZM186 17.9.2009 SLEZACKOVA
2. PRIDAN DRZAK 30.8910-004. 092/ZM093 3.5.2011 SLEZACKOVA
3. ZRUS.TRUBICKA 30.3510-004 A NAHR.30.6010-315,ZRUS.KOLIK 8x40(90.300.0Z.011). 231/ZM264 29.10.2013 SLEZACKOVA
4. ZRUS.KRYT 30.Y510-006 A NAHR.30.Y510-009,ZRUS.KRYT 30.Y510-008 A NAHR.30.Y510-010. 322/ZM305 18.12.2013 SLEZACKOVA
5. ZRUS.KRYT PASU 30.Y510-009 A NAHR.30.Y610-107,ZRUS.KRYT PASU 30.Y510-010 A NAHR.30.Y410-108. 074/ZM116 26.5.2014 SLEZACKOVA

Cislo Sestavy/Number of assembly/Nummer der Baugruppe; Verze (Ver.)/Version/Version; Nazev sestavy/Assembly title/Name der Baugruppe; Pozice (Poz.)/Position/Position; Objednaci cislo/Purchase order number/Bestellnummer; Nazev polozky/Volume title/Name der Position; Rozmer/Stock size/Abmessung

7.40. Kostka regulace / Regulation cube / Regulungswürfel

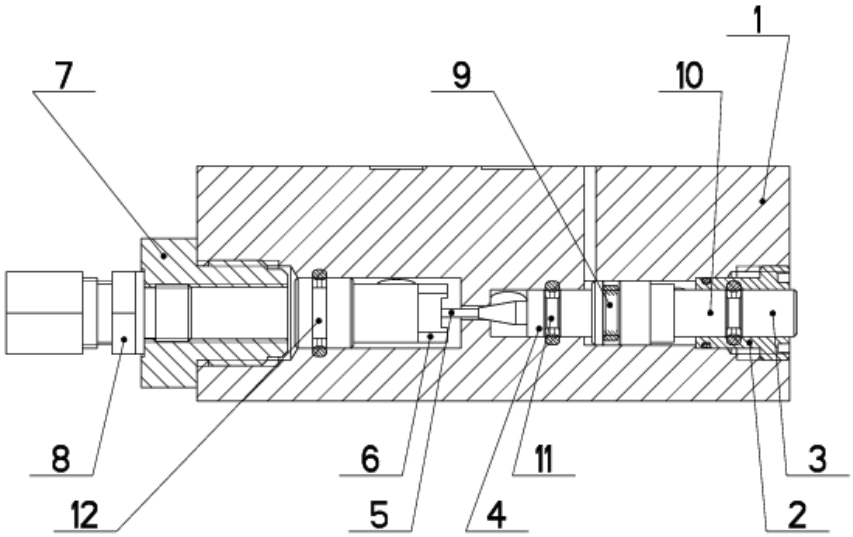

NAZEV SESTAVY	CISLO SESTAVY	STROJ
KOSTKA REGULACE	201.6816-100	SL-520

Konstruoval:	MARAK
Datum:	10. 04.2018
Meritko:	1:1

7.41. Kusovník / Piece list / Stückliste - Kostka regulace / Regulation cube / Regulungswürfel

Cislo Sestavy	Ver.	Nazev sestavy
201.6816-100	0	KOSTKA REGULACE/REGULATION CUBE/REGELUNGSWÜRFEL

Poz.	Objednaci cislo	Ver.	Nazev polozky	Rozmer	Ks
1	30.6816-101	3	KOSTKA REGULACE / REGULATION CUBE / REGELUNGSWÜRFEL	TYC 40x40	1
2	30.6816-104	3	VIKO / COVER / DECKEL	D 16	1
3	30.6816-103	1	PIST / PISTON / KOLBEN	D 12	1
4	30.6816-108	2	JEHLA / NEEDLE / NADEL	TYC 8	1
5	95.690.001	0	JEHLA / NEEDLE / NADEL	1.5x11.8	1
6	30.6816-106	3	PIST / PISTON / KOLBEN	TYC 12	1
7	30.6816-107	0	VIKO / COVER / DECKEL	TYC 22	1
8	92.002.102	0	SROUBENI / BOLTING / VERSCHRAUBUNG	S-GEV-8LLR	1
9	96.001.019	0	KROUZEK O DYNAMICKY / DYNAMIC O RING / O-RING DYNAMISCH	6X2	1
10	96.002.041	0	KROUZEK O DYNAMICKY / DYNAMIC O RING / O-RING DYNAMISCH	10x1	1
11	96.001.001	0	O-KROUZEK STATIC / STATIC O RING / O-RING STATISCH	4X1,8	2
12	96.001.003	0	O-KROUZEK STATIC / STATIC O RING / O-RING STATISCH	8X2	1

Cislo Sestavy/Number of assembly/Nummer der Baugruppe; Verze (Ver.)/Version/Version; Nazev sestavy/Assembly title/Name der Baugruppe; Pozice (Poz.)/Position/Position; Objednaci cislo/Purchase order number/Bestellnummer; Nazev polozky/Volume title/Name der Position; Rozmer/Stock size/Abmessung

7.42. Kostka vodící / Lead cube / Führungsklotz

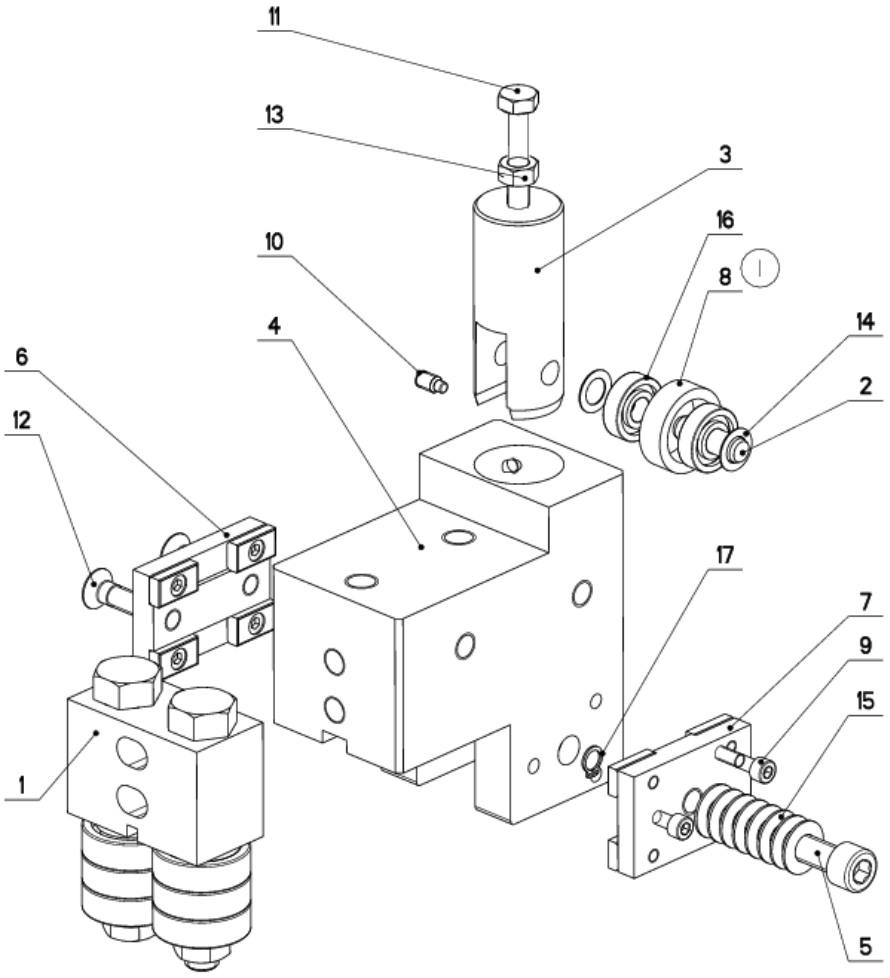

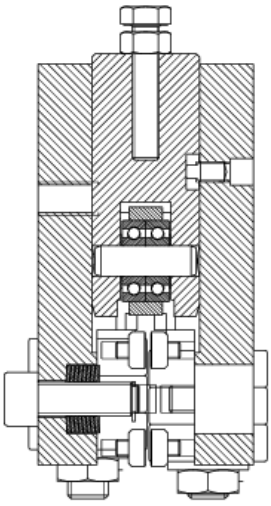

C - C
3:5

NAZEV SESTAVY	CISLO SESTAVY	STROJ
KOSTKA VODICI	201.Y610-100	IND.540,640
BOMAR	Konstruoval: MUSIL	
	Datum: 23. 06.2015	
	Meritko: 1:2	

7.43. Kusovník / Piece list / Stückliste - Kostka vodící / Lead cube / Führungsklotz

Cislo Sestavy	Ver.	Nazev sestavy
201.Y610-100	1	KOSTKA VODICI/LEAD CUBE/FÜHRUNGSKLOTZ

Poz.	Objednaci cislo	Ver.	Nazev polozky	Rozmer	Ks
1	201.C410-510	0	VEDENI / GUIDE / BACKENFÜHRUNG		1
2	30.6710-108	1	KOLIK / PIN / BOLZEN	TYC 10	1
3	30.6710-109	0	PIST / PISTON / KOLBEN	d 32	1
4	30.Y610-101	2	KOSTKA VODICI / LEAD CUBE / FÜHRUNGSKLOTZ	HR 120x80	1
5	30.Y610-106	0	SROUB IMBUS / ALLEN HEAD BOLT / IMBUSSCHRAUBE	M10x30	1
6	30.Y610-110	0	DRZAK TVRDOKOVU / POA HOLDER / HM-HALTER		1
7	30.Y610-120	0	DRZAK TVRDOKOVU / POA HOLDER / HM-HALTER		1
8	31.6710-110 (1)	1	KROUZEK / RING / RING	LH 2403210	1
9	90.001.25.011	0	SROUB IMBUS / ALLEN HEAD BOLT / IMBUSSCHRAUBE	M5X25	3
10	90.004.20.002	0	SROUB STAVECI / ADJUSTMENT BOLT / STELLSCHRAUBE	SROUB M6X12	1
11	90.005.55.019	0	SROUB 6HRANNY / 6 SIDED BOLT / SECHSKANTSCHRAUBE	SROUB M8X40	1
12	90.011.27.016	0	ZAPUSTNY IMBUS / COUNTERSINK BOLT / SENKSCHRAUBE	SROUB M8X25	2
13	90.100.55.005	0	MATICE / NUT / MUTTER	MATICE _ M8	1
14	90.154.50.003	0	PODLOZKA / WASHER / UNTERLEGSCHEIBE	10x16x0.50	2
15	90.350.02.005	0	PRUZINA TALIROVA / DISC SPRING / TELLERFEDER	20X10.2X1	8
16	95.001.044	0	LOZISKO / BEARING / LAGER	609 2RS	2
17	95.800.002	0	SEGR HRIDEL. / OUTSIDE SAFETY RING / SICHERUNGSRING AUSSEN	POJISTNY KROUZEK 8	1

1.ZRUS.SOUC.30.6710-110 A NAHR.31.6710-110. 175/ZM178 28.7.2015 SLEZACKOVA

Cislo Sestavy/Number of assembly/Nummer der Baugruppe; Verze (Ver.)/Version/Version; Nazev sestavy/Assembly title/Name der Baugruppe; Pozice (Poz.)/Position/Position; Objednaci cislo/Purchase order number/Bestellnummer; Nazev polozky/Volume title/Name der Position; Rozmer/Stock size/Abmessung

7.44. Vedení / Guide / Backenführung

Cislo Sestavy	Ver.	Nazev sestavy
201.C410-510	0	VEDENI/GUIDE/BACKENFÜHRUNG

Poz.	Objednaci cislo	Ver.	Nazev polozky	Rozmer	Ks
1	30.6010-108	0	KROUZEK DISTANCNI / DISTANCE RING / DISTANZRING	Tr 25x5	1
2	30.6110-502	0	KOSTKA VODICI / LEAD CUBE / FÜHRUNGSKLOTZ	HR 80x50	1
3	30.C410-104	0	EXCENTR / CAM / EXZENTER	6HR 22	2
4	90.101.55.006	0	MATICE / NUT / MUTTER	MATICE M12	2
5	90.150.50.007	0	PODLOZKA / WASHER / UNTERLEGSCHEIBE	PODLOZKA 13	2
6	90.150.50.008	0	PODLOZKA / WASHER / UNTERLEGSCHEIBE	PODLOZKA 15	1
7	95.001.015	0	LOZISKO / BEARING / LAGER	6202 2RS	6

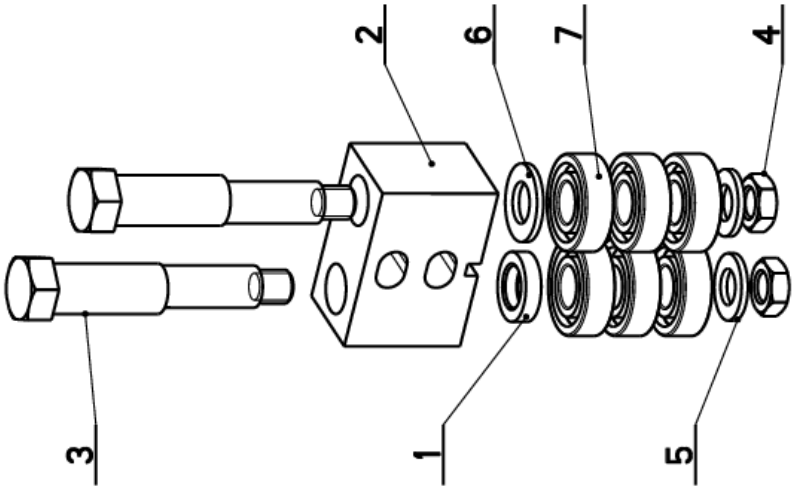

7.45. Kostka vodící / Lead cube / Führungsklotz

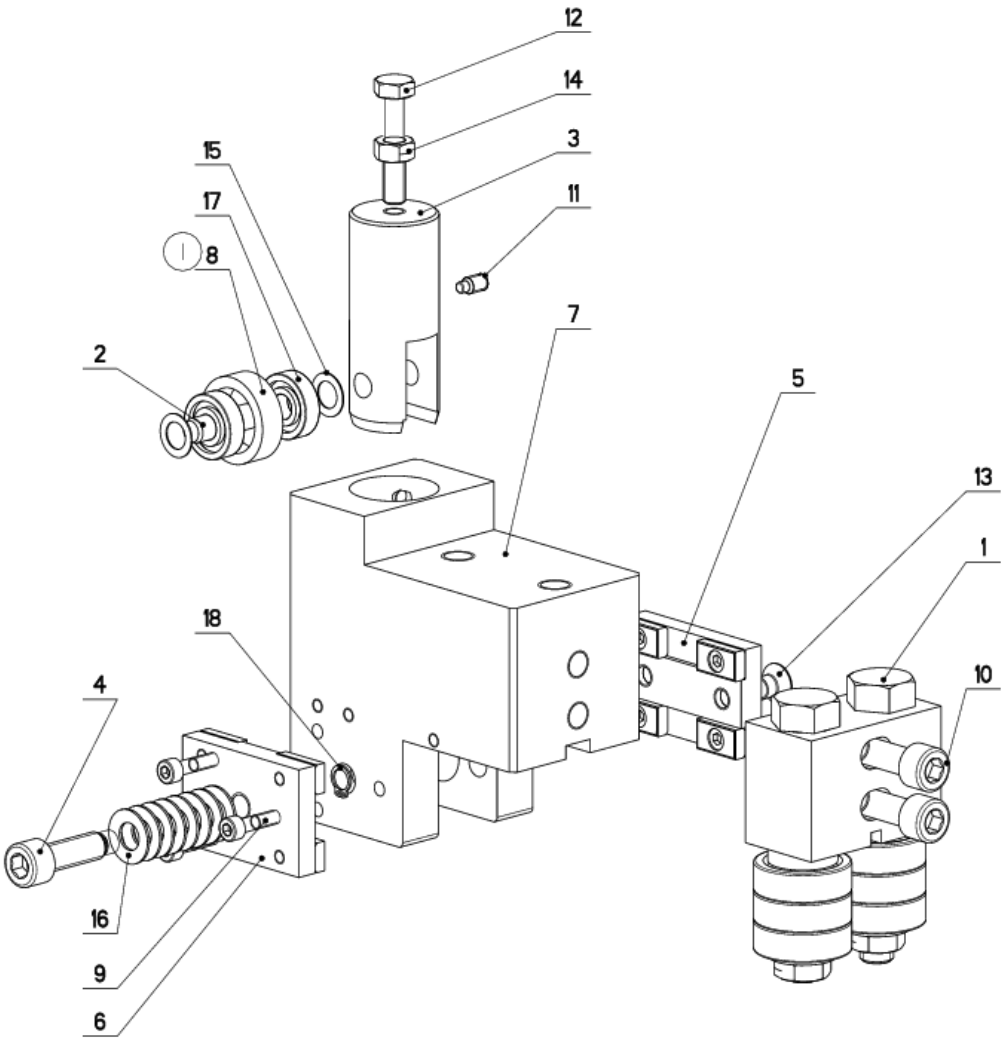

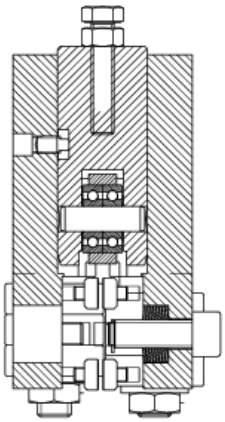

NAZEV SESTAVY	CISLO SESTAVY	STROJ
KOSTKA VODICI	201.Y610-200	IN5/6
BOMAR	Konstruoval: MUSIL	
	Datum: 23. 06.2015	
	Meritko: 1:2	

7.46. Kusovník / Piece list / Stückliste -Kostka vodící / Lead cube / Führungsklotz

Cislo Sestavy	Ver.	Nazev sestavy
201.Y610-200	1	KOSTKA VODICI/LEAD CUBE/FÜHRUNGSKLOTZ

Poz.	Objednaci cislo	Ver.	Nazev polozky	Rozmer	Ks
1	201.C410-510	0	VEDENI / GUIDE / BACKENFÜHRUNG		1
2	30.6710-108	1	KOLIK / PIN / BOLZEN	TYC 10	1
3	30.6710-109	0	PIST / PISTON / KOLBEN	d 32	1
4	30.Y610-106	0	SROUB IMBUS / ALLEN HEAD BOLT / IMBUSSCHRAUBE	M10x30	1
5	30.Y610-110	0	DRZAK TVRDOKOVU / POA HOLDER / HM-HALTER		1
6	30.Y610-120	0	DRZAK TVRDOKOVU / POA HOLDER / HM-HALTER		1
7	30.Y610-201	3	KOSTKA VODICI / LEAD CUBE / FÜHRUNGSKLOTZ	HR 120x80	1
8	31.6710-110 (1)	1	KROUZEK / RING / RING	LH 2403210	1
9	90.001.25.011	0	SROUB IMBUS / ALLEN HEAD BOLT / IMBUSSCHRAUBE	M5X25	3
10	90.001.25.053	0	SROUB IMBUS / ALLEN HEAD BOLT / IMBUSSCHRAUBE	M10X55	2
11	90.004.20.002	0	SROUB STAVECI / ADJUSTMENT BOLT / STELLSCHRAUBE	SROUB M6X12	1
12	90.005.55.019	0	SROUB 6HRANNY / 6 SIDED BOLT / SECHSKANTSCHRAUBE	SROUB M8X40	1
13	90.011.27.016	0	ZAPUSTNY IMBUS / COUNTERSINK BOLT / SENKSCHRAUBE	SROUB M8X25	2
14	90.100.55.005	0	MATICE / NUT / MUTTER	MATICE _ M8	1
15	90.154.50.003	0	PODLOZKA / WASHER / UNTERLEGSCHEIBE	10x16x0.50	2
16	90.350.02.005	0	PRUZINA TALIROVA / DISC SPRING / TELLERFEDER	20X10.2X1	8
17	95.001.044	0	LOZISKO / BEARING / LAGER	609 2RS	2
18	95.800.002	0	SEGR HRIDEL. / OUTSIDE SAFETY RING / SICHERUNGSRING AUSSEN	POJISTNY KROUZEK 8	1

1.ZRUS.SOUC.30.6710-110 A NAHR.31.6710-110. 175/ZM178 28.7.2015 SLEZACKOVA

Cislo Sestavy/Number of assembly/Nummer der Baugruppe; Verze (Ver.)/Version/Version; Nazev sestavy/Assembly title/Name der Baugruppe; Pozice (Poz.)/Position/Position; Objednaci cislo/Purchase order number/Bestellnummer; Nazev polozky/Volume title/Name der Position; Rozmer/Stock size/Abmessung

7.47. Vedení / Guide / Backenführung

Cislo Sestavy	Ver.	Nazev sestavy
201.C410-510	0	VEDENI/GUIDE/BACKENFÜHRUNG

Poz.	Objednaci cislo	Ver.	Nazev polozky	Rozmer	Ks
1	30.6010-108	0	KROUZEK DISTANCNI / DISTANCE RING / DISTANZRING	Tr 25x5	1
2	30.6110-502	0	KOSTKA VODICI / LEAD CUBE / FÜHRUNGSKLOTZ	HR 80x50	1
3	30.C410-104	0	EXCENTR / CAM / EXZENTER	6HR 22	2
4	90.101.55.006	0	MATICE / NUT / MUTTER	MATICE M12	2
5	90.150.50.007	0	PODLOZKA / WASHER / UNTERLEGSCHEIBE	PODLOZKA 13	2
6	90.150.50.008	0	PODLOZKA / WASHER / UNTERLEGSCHEIBE	PODLOZKA 15	1
7	95.001.015	0	LOZISKO / BEARING / LAGER	6202 2RS	6

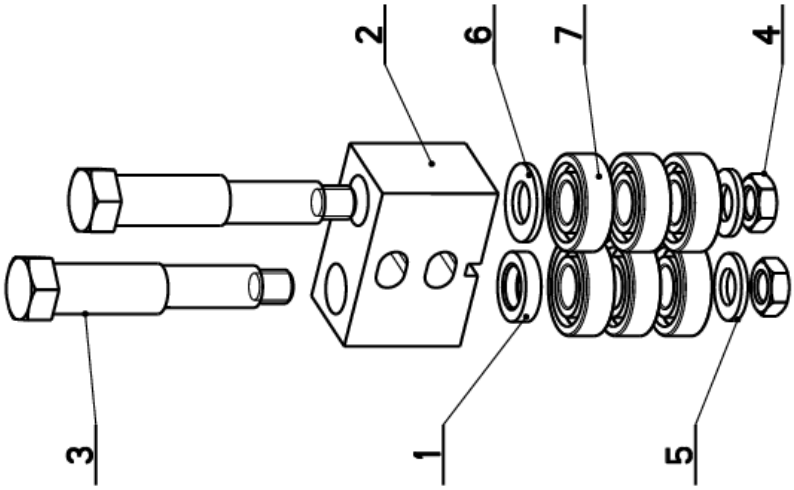

7.48. Válec zvedací /Lifting cylinder / Hebezylinder

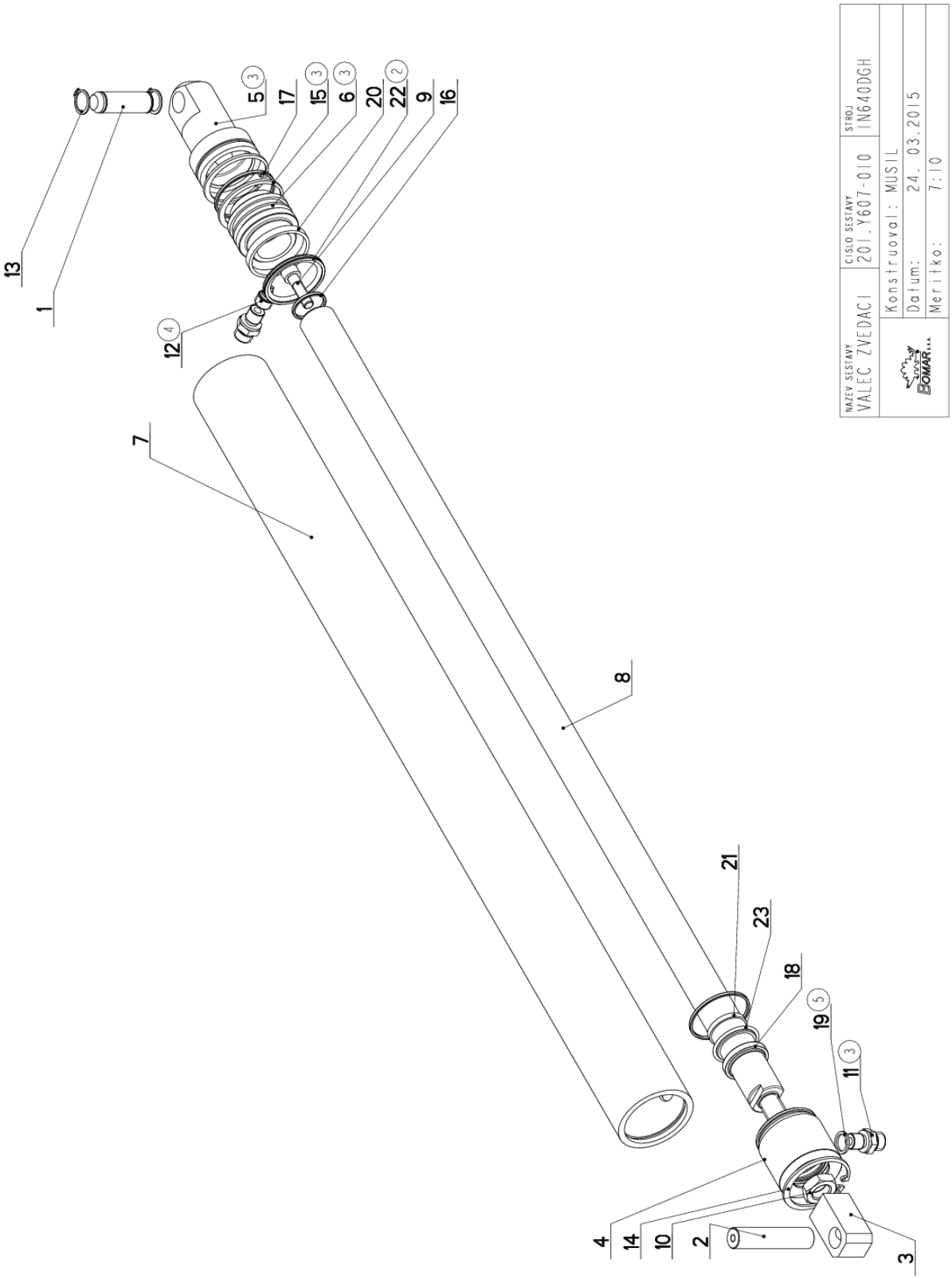

7.49. Kusovník / Piece list / Stückliste -Válec zvedací /Lifting cylinder / Hebezylinder

Cislo Sestavy	Ver.	Nazev sestavy
201.Y607-010	5	VALEC ZVEDACI/LIFTING CYLINDER/HEBEZYLINDER

Poz.	Objednaci cislo	Ver.	Nazev polozky	Rozmer	Ks
1	30.0807-009	2	CEP / LUG / BOLZEN	d 16h9	1
2	30.8307-205	0	CEP / LUG / BOLZEN	d 16h9	1
3	30.8607-001	1	DRZAK / HOLDER / HALTER	HR 25x25	1
4	30.C407-012	2	VIKO / COVER / DECKEL	d 55	1
5	30.Y307-003 (3)	3	VIKO / COVER / DECKEL	d 55	1
6	30.Y307-012 (3)	1	PIST / PISTON / KOLBEN	d 55	1
7	30.Y607-011	4	VALEC / ROLLER / ZYLINDER	TR 62/50H8	1
8	30.Y607-012	0	PISTNICE / PISTON ROD / KOLBENSTANGE	d 28 f8	1
9	90.001.55.083	0	SROUB IMBUS / ALLEN HEAD BOLT / IMBUSSCHRAUBE	M8X30	1
10	90.101.55.003	0	MATICE / NUT / MUTTER	MATICE M16	1
11	92.002.001 (3)	0	SROUBENI PRIME / DIRECT BOLTING / GERADE VERSCHRAUBUNG	G 1/4"	2
12	92.151.008 (4)	0	VENTIL POJISTNY / SAFETY VALVE / SICHERUNGSVENTIL	VPN-H 1/4"	1
13	95.800.007	0	SEGR HRIDEL. / OUTSIDE SAFETY RING / SICHERUNGSRING AUSSEN	POJISTNY KROUZEK 16	2
14	95.801.009	0	SEGR DIRA / INSIDE SAFETY RING / SICHERUNGSRING INNEN	POJISTNY KROUZEK 52	1
15	95.801.018 (3)	0	KROUZEK POJIST.VNITR / INSIDE SAFETY RING / SICHERUNGSRING INNEN	POJISTNY KROUZEK 50	2
16	96.002.011	0	KROUZEK O DYNAMICKY / DYNAMIC O RING / O-RING DYNAMISCH	24X2	1
17	96.002.019	0	KROUZEK O DYNAMICKY / DYNAMIC O RING / O-RING DYNAMISCH	46x2 NBR 70SH	2
18	96.061.009	0	KROUZEK STIRACI / SCRAPER RING / ABSTREIFRING	WD2200280 Z201	1
19	96.082.002 (5)	0	TESNENI / SEAL RING / DICHTUNGSRING	13/17x1.5 CU	1
20	96.084.001	0	KROUZEK VODICI / LEAD RING / FÜHRUNGSRING	GP6500500-T47	1
21	96.084.006	0	KROUZEK VODICI / LEAD RING / FÜHRUNGSRING	GR4300280-T47	1
22	96.900.013 (2)	0	TESNENI KOMBINOVANE / COMBINATION SEALING / KOMBIDICHTUNG	PT0200500	1
23	96.900.021	0	TESNENI KOMBINOVANE / COMBINATION SEALING / KOMBIDICHTUNG	RSK200280-46N	1

1.ZRUS.SROUBENI 92.002.005 A NAHR.92.003.001,ZRUS.SROUBENI 30.6107-510 A NAHR.30.9107-509,ZRUS.2xTESNENI 96.082.002 (ZUSTAVAJI 2 ks). 071/ZM067 15.4.2010 SLEZACKOVA

2.ZRUSENO SROUBENI 96.900.001 A NAHRAZENO 96.900.013. 336/ZM006 11.1.2011 SLEZACKOVA

3.ZRUS.REDUKCE 30.9107-509,ZRUS.SROUBENI 30.1807-005,ZRUS.VIKO 30.Y307-005 A NAHR.30.Y307-003,ZRUS.SROUBENI 92.003.001 A NAHR.92.002.001,ZRUS.1XKROUZEK VODICI 96.084.001,ZRUS.1xPOJ.KROUZEK 95.801.009 A NAHR.95.801.018,ZRUS.PIST 30.LM07-504 A NAHR.30.Y307-012. 026/ZM033 21.2.2011 SLEZACKOVA

4.VENTIL 92.151.001 PRECISLOVAN NA 92.151.008. 222/ZM212 30.7.2013 SLEZACKOVA

5.ZRUS. 2xTESNENI 96.082.002. 290/ZM003 10.1.2019 SZABARI

Cislo Sestavy/Number of assembly/Nummer der Baugruppe; Verze (Ver.)/Version/Version; Nazev sestavy/Assembly title/Name der Baugruppe; Pozice (Poz.)/Position/Position; Objednaci cislo/Purchase order number/Bestellnummer; Nazev polozky/Volume title/Name der Position; Rozmer/Stock size/Abmessung

7.50. Svěrák / Vice / Schraubstock

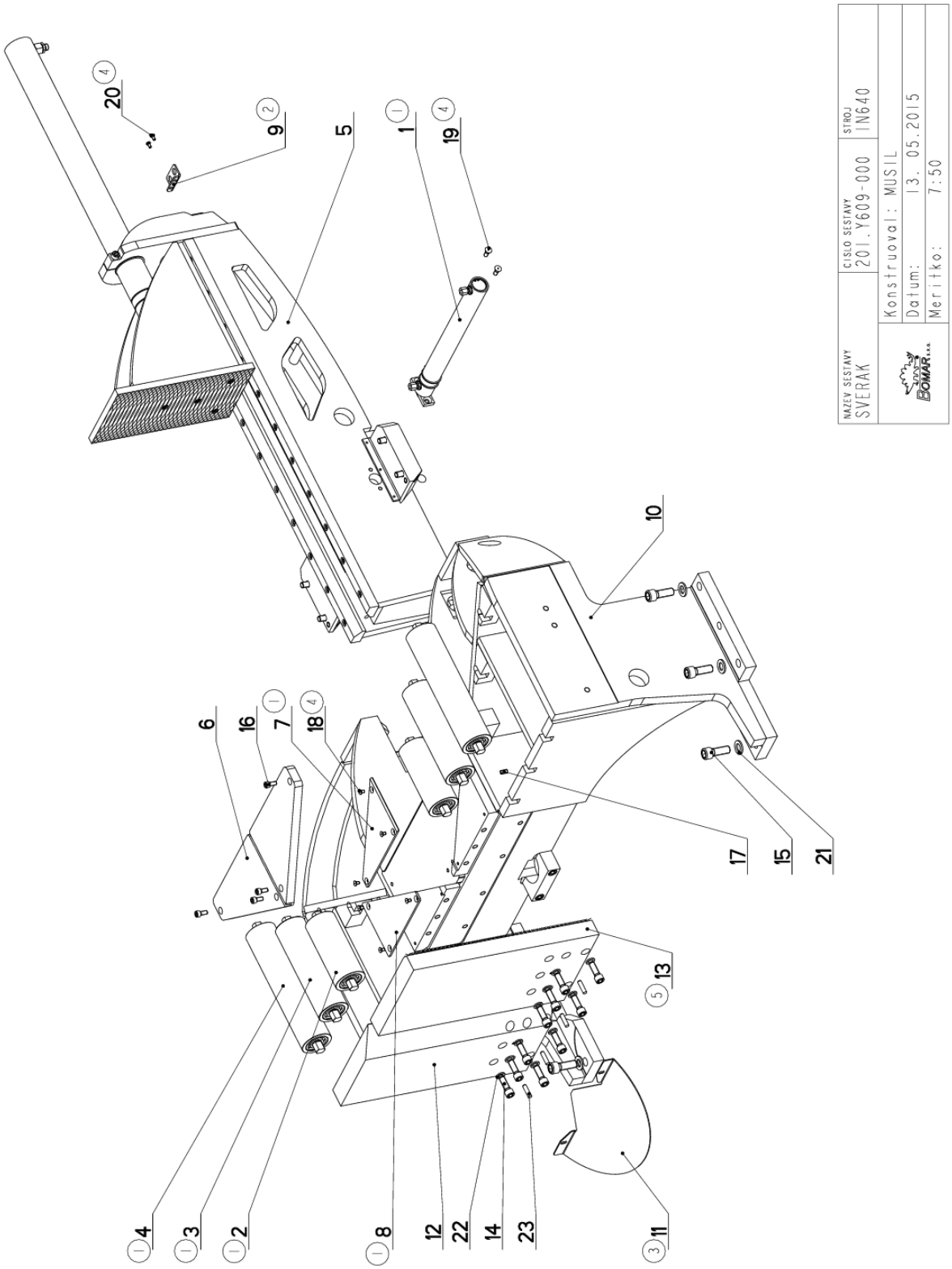

Cislo Sestavy	Ver.	Nazev sestavy
201.Y609-000	5	SVERAK/VICE/SCHRAUBSTOCK

Poz.	Objednaci cislo	Ver.	Nazev polozky	Rozmer	Ks
1	201.V307-150 (1)	0	VALEC POMOCNY / AUXILIARY CYLINDER / HILFSZYLINDER		1
2	201.Y317-050 (1)	0	VALECEK / CYLINDER / ROLLE		2
3	201.Y317-060 (1)	0	VALECEK / CYLINDER / ROLLE		2
4	201.Y317-070 (1)	0	VALECEK / CYLINDER / ROLLE		2
5	201.Y603-000	3	SVERAK / VICE / SCHRAUBSTOCK		1
6	30.Y309-004	0	DESKA / BOARD / PLATTE	ODLITEK	1
7	30.Y309-104 (1)	0	DESKA / BOARD / PLATTE	P4x142	1
8	30.Y309-105 (1)	0	DESKA / BOARD / PLATTE	P4x142	1
9	30.Y309-204 (2)	0	DRZAK / HOLDER / HALTER	P 3x45	1
10	30.Y509-101	8	PODSTAVEC SVERAKU / VICE BASE / SCHRAUBSTOCKUNTERSATZ		1
11	30.Y514-102 (3)	0	SKLUZ / SLIDE / RUTSCH	P 2x214	1
12	30.Y609-002	3	CELIST PEVNA / SOLID JAW / FESTE BACKE	P45x242	1
13	30.Y609-003 (5)	0	CELIST PEVNA / SOLID JAW / FESTE BACKE	P 45x242	1
14	90.001.25.059	0	SROUB IMBUS / ALLEN HEAD BOLT / IMBUSSCHRAUBE	M12X35	10
15	90.001.25.074	0	SROUB IMBUS / ALLEN HEAD BOLT / IMBUSSCHRAUBE	M16X45	6
16	90.001.25.105	0	SROUB IMBUS / ALLEN HEAD BOLT / IMBUSSCHRAUBE	M8X18	4
17	90.002.2D.012	0	SROUB STAVECI / ADJUSTMENT BOLT / STELLSCHRAUBE	SROUB M8X16	12
18	90.011.27.004 (4)	0	ZAPUSTNY IMBUS / COUNTERSINK BOLT / SENKSCHRAUBE	SROUB M6X10	6
19	90.011.27.027 (4)	0	SROUB ZAPUSTNY / COUNTERSINK BOLT / SENKSCHRAUBE	SROUB M8X20	2
20	90.013.27.003 (4)	0	SROUB / BOLT / SCHRAUBE	M5X10	2
21	90.150.50.009	0	PODLOZKA / WASHER / UNTERLEGSCHEIBE	PODLOZKA 17	6
22	90.163.00.003	0	PODLOZKA / WASHER / UNTERLEGSCHEIBE	NORD-LOCK	10
23	90.300.0Z.010	0	KOLIK VALC. KAL. / CYLINDRICAL PIN TEMPERED / ZYLINDERSTIFT GEHARTET	KOLIK 8X32	4

1. ZRUSENA POLOZKA 30.Y509-008;ZRUS.2xSROUB M12x60 90.001.25.063, PRIDAN SKLUZ 30.Y514-002 A PRESUVNY VALEC 201.V307-150; 250/zm.261 HLADIL 29.9.2010
   VALECKY 201.Y317-010 NAHRAZENY 201.Y317-050; 201.Y317-020 NAHRAZENY 201.Y317-060; 201.Y517-030 NAHRAZENY 201.Y317-070
   PRIDANY DILY 30.Y309-104 A 30.Y309-105 331/zm.339 HLADIL 13.12.2010
2. PRIDAN DRZAK 30.Y309-204. 025/ZM065 8.3.2013 SLEZACKOVA
3. ZRUS.SKLUZ 30.Y514-002 A NAHR.30.Y514-102. 074/ZM116 26.5.2014 SLEZACKOVA
4. PRIDAN:2xSROUB 90.013.27.003,2xSROUB 90.011.27.027,6xSROUB 90.011.27.004. 093/ZM150 23.7.2014 MRKOS
5. ZRUSENA 1xCELIST 30.Y609-002 A NAHR.1xCELIST 30.Y609-003. 021/ZM094 13.5.2015 SLEZACKOVA

Cislo Sestavy/Number of assembly/Nummer der Baugruppe; Verze (Ver.)/Version/Version; Nazev sestavy/Assembly title/Name der Baugruppe; Pozice (Poz.)/Position/Position; Objednaci cislo/Purchase order number/Bestellnummer; Nazev polozky/Volume title/Name der Position; Rozmer/Stock size/Abmessung

7.52. Válec pomocný / Auxiliary cylinder / Hilfszylinder

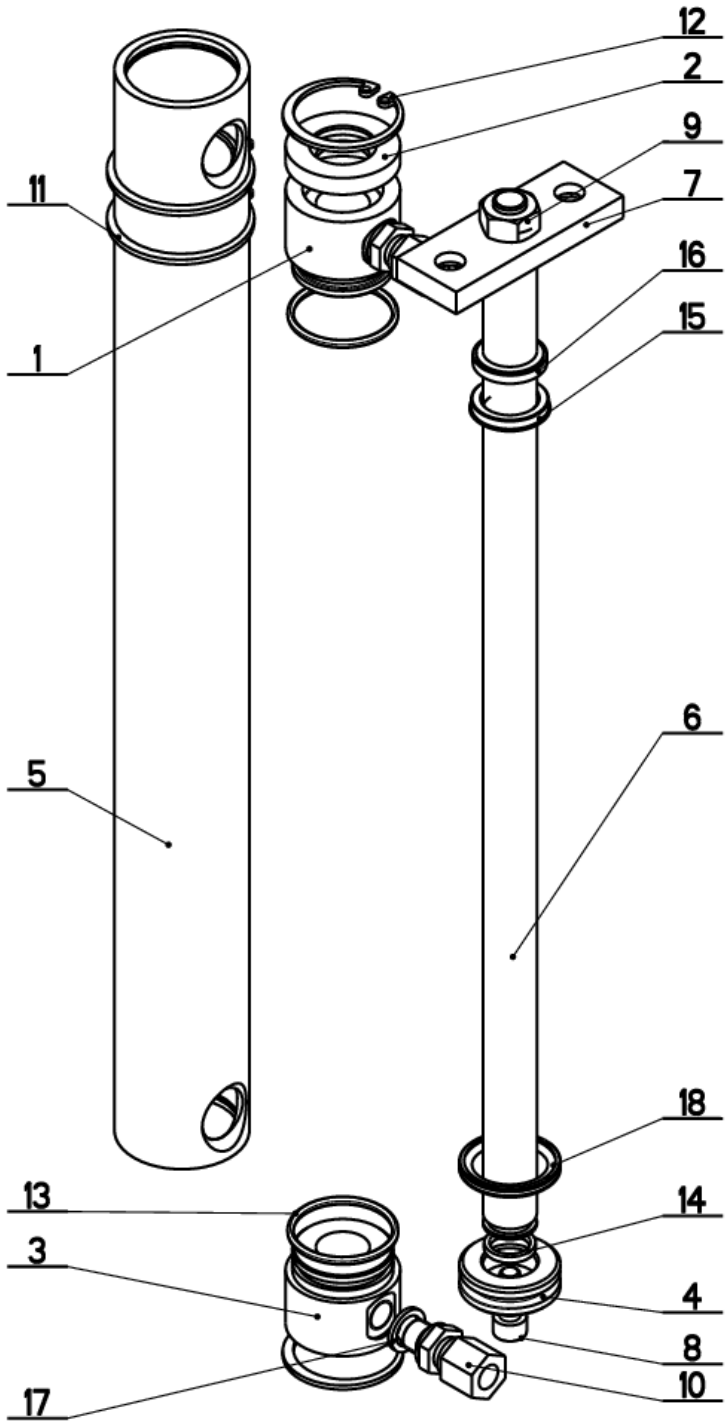

NAZEV SESTAVY	CISLO SESTAVY	STROJ
VALEC POMOCNY	201.V307-150	IN360DGA

Konstruoval:	HLADIL
Datum:	25. 05.2010
Meritko:	3:5

7.53. Kusovník / Piece list / Stückliste -Válec pomocný / Auxiliary cylinder / Hilfszylinder

Cislo Sestavy	Ver.	Nazev sestavy
201.V307-150	0	VALEC POMOCNY/AUXILIARY CYLINDER/HILFSZYLINDER

Poz.	Objednaci cislo	Ver.	Nazev polozky	Rozmer	Ks
1	30.6807-103	0	VIKO / COVER / DECKEL	TYC 35	1
2	30.6807-104	1	VIKO / COVER / DECKEL	TYC 35	1
3	30.6807-105	0	VIKO / COVER / DECKEL	TYC 35	1
4	30.6807-203	0	PIST / PISTON / KOLBEN	TYC 35	1
5	30.V307-151	0	VALEC POMOCNY / AUXILIARY CYLINDER / HILFSZYLINDER	TR 40/30	1
6	30.V307-152	0	PISTNICE / PISTON ROD / KOLBENSTANGE	d 16	1
7	30.V307-157	0	DRZAK / HOLDER / HALTER	HR 25x8	1
8	90.001.25.017	0	SROUB IMBUS CERNENY / ALLEN HEAD BOLT / IMBUSSCHRAUBE	M6X16	1
9	90.100.55.006	0	MATICE / NUT / MUTTER	MATICE _ M10	1
10	92.002.102	0	SROUBENI PRIME / DIRECT BOLTING / GERADE VERSCHRAUBUNG	S-GEV-8LLR	2
11	95.800.015	0	KROUZEK POJIST.VNEJS / OUTSIDE SAFETY RING / SICHERUNGSRING AUßEN	POJISTNY KROUZEK 40	2
12	95.801.026	0	KROUZEK POJIST.VNITR / INSIDE SAFETY RING / SICHERUNGSRING INNEN	POJISTNY KROUZEK 34	2
13	96.001.008	0	KROUZEK O STATICKY / STATIC O RING / O-RING STATISCH	26X2	2
14	96.002.006	0	KROUZEK O DYNAMICKY / DYNAMIC O RING / O-RING DYNAMISCH	12X2	1
15	96.041.001	0	TESNENI / SEALING / DICHTUNG	16x24x4	1
16	96.060.001	0	KROUZEK STIRACI / SCRAPER RING / ABSTREIFRING	16x22	1
17	96.082.001	0	KROUZEK TESNICI / SEAL RING / DICHTUNGSRING	10/14	2
18	96.900.007	0	TESNENI KOMBINOVANE / COMBINATION SEALING / KOMBIDICHTUNG		1

Cislo Sestavy/Number of assembly/Nummer der Baugruppe; Verze (Ver.)/Version/Version; Nazev sestavy/Assembly title/Name der Baugruppe; Pozice (Poz.)/Position/Position; Objednaci cislo/Purchase order number/Bestellnummer; Nazev polozky/Volume title/Name der Position; Rozmer/Stock size/Abmessung

7.54. Váleček / Cylinder / Rolle

Cislo Sestavy	Ver.	Nazev sestavy
201.Y317-050	0	VALECEK/CYLINDER/ROLLE

Poz.	Objednaci cislo	Ver.	Nazev polozky	Rozmer	Ks
1	30.Y317-051	0	VALEC / ROLLER / ZYLINDER	TR 70x12.5	1
2	30.Y317-052	0	OSA / AXLE / ACHSE	d 20	1
3	95.001.024	0	LOZISKO / BEARING / LAGER	6304 2RSA	2

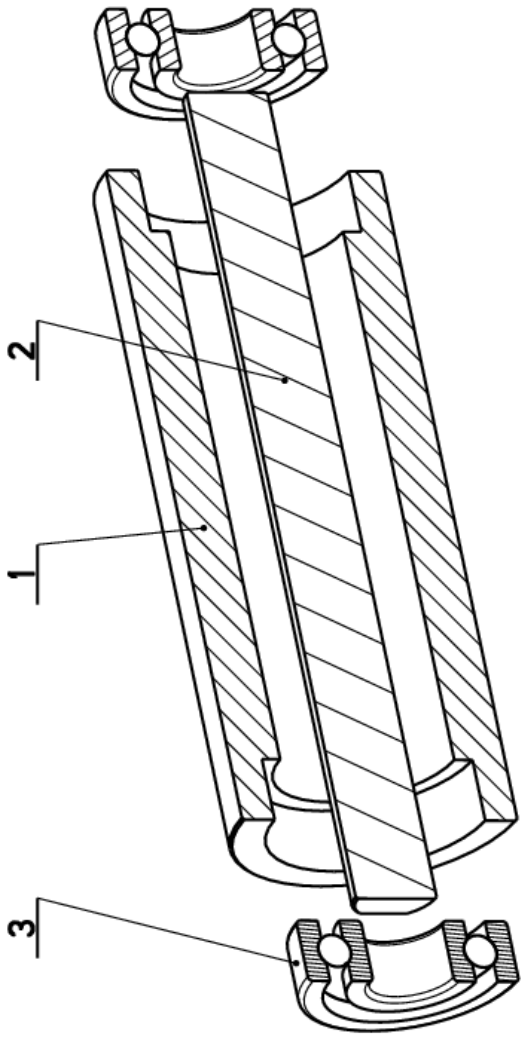

Cislo Sestavy/Number of assembly/Nummer der Baugruppe; Verze (Ver.)/Version/Version; Nazev sestavy/Assembly title/Name der Baugruppe; Pozice (Poz.)/Position/Position;
Objednaci cislo/Purchase order number/Bestellnummer; Nazev polozky/Volume title/Name der Position; Rozmer/Stock size/Abmessung

7.55. Váleček / Cylinder / Rolle – 201.Y317-060

Cislo Sestavy
201.Y317-060

Ver.
0

Nazev sestavy
VALECEK/CYLINDER/ROLLE

Poz.	Objednaci cislo	Ver.	Nazev polozky	Rozmer	Ks
1	30.Y317-061	0	VALEC / ROLLER / ZYLINDER	TR 70x12.5	1
2	30.Y317-062	0	OSA / AXLE / ACHSE	d 20	1
3	95.001.024	0	LOZISKO / BEARING / LAGER	6304 2RSA	2

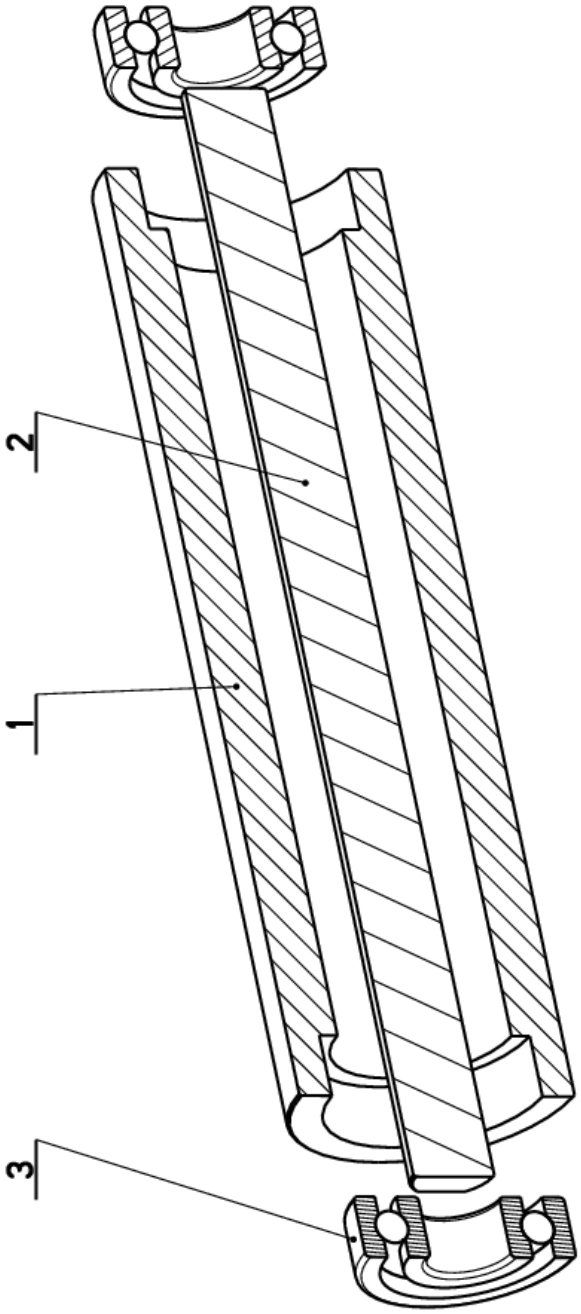

Cislo Sestavy/Number of assembly/Nummer der Baugruppe; Verze (Ver.)/Version/Version; Nazev sestavy/Assembly title/Name der Baugruppe; Pozice (Poz.)/Position/Position;
Objednaci cislo/Purchase order number/Bestellnummer; Nazev polozky/Volume title/Name der Position; Rozmer/Stock size/Abmessung

7.56. Váleček / Cylinder / Rolle – 201.Y317-070

Cislo Sestavy
201.Y317-070

Ver.
0

Nazev sestavy
VALECEK/CYLINDER/ROLLE

Poz.	Objednaci cislo	Ver.	Nazev polozky	Rozmer	Ks
1	30.Y317-071	0	VALEC / ROLLER / ZYLINDER	TR 70x12.5	1
2	30.Y317-072	0	OSA / AXLE / ACHSE	d 20	1
3	95.001.024	0	LOZISKO / BEARING / LAGER	6304 2RSA	2

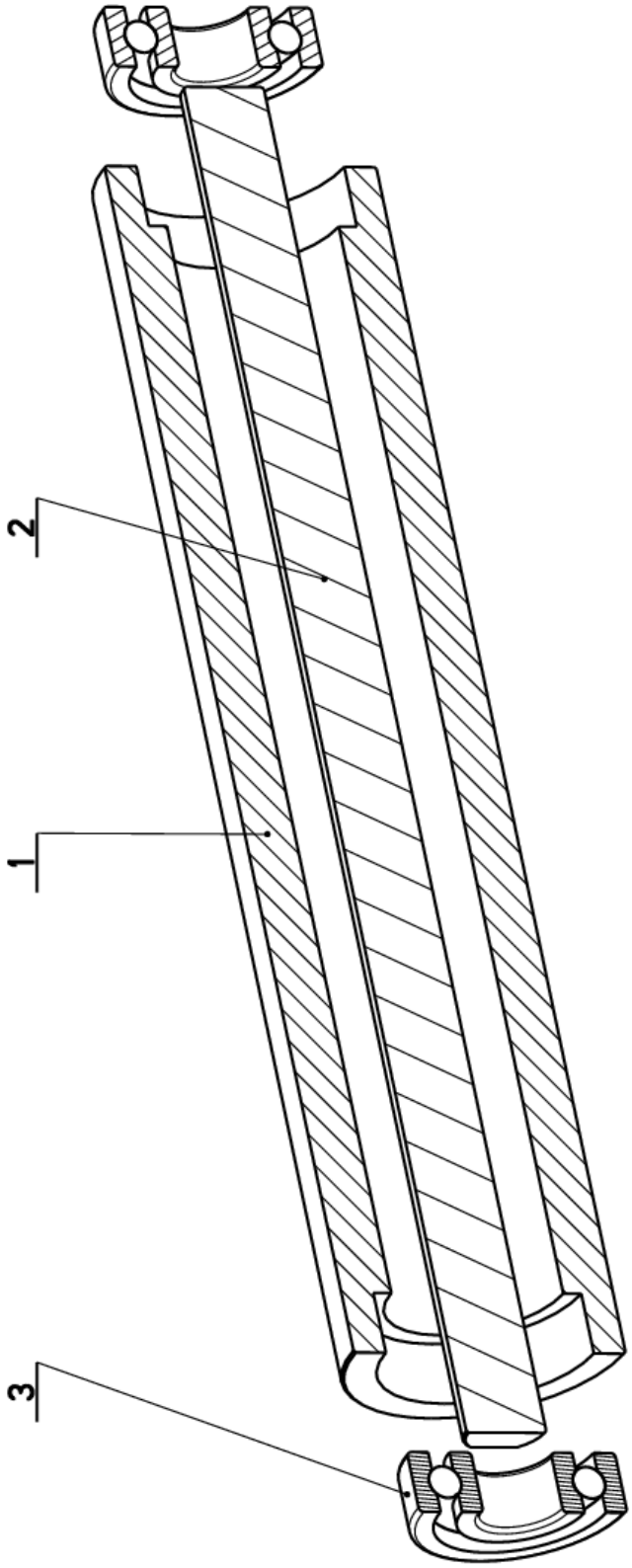

Cislo Sestavy/Number of assembly/Nummer der Baugruppe; Verze (Ver.)/Version/Version; Nazev sestavy/Assembly title/Name der Baugruppe; Pozice (Poz.)/Position/Position;
Objednaci cislo/Purchase order number/Bestellnummer; Nazev polozky/Volume title/Name der Position; Rozmer/Stock size/Abmessung

7.57. Svěrák / Vice / Schraubstock

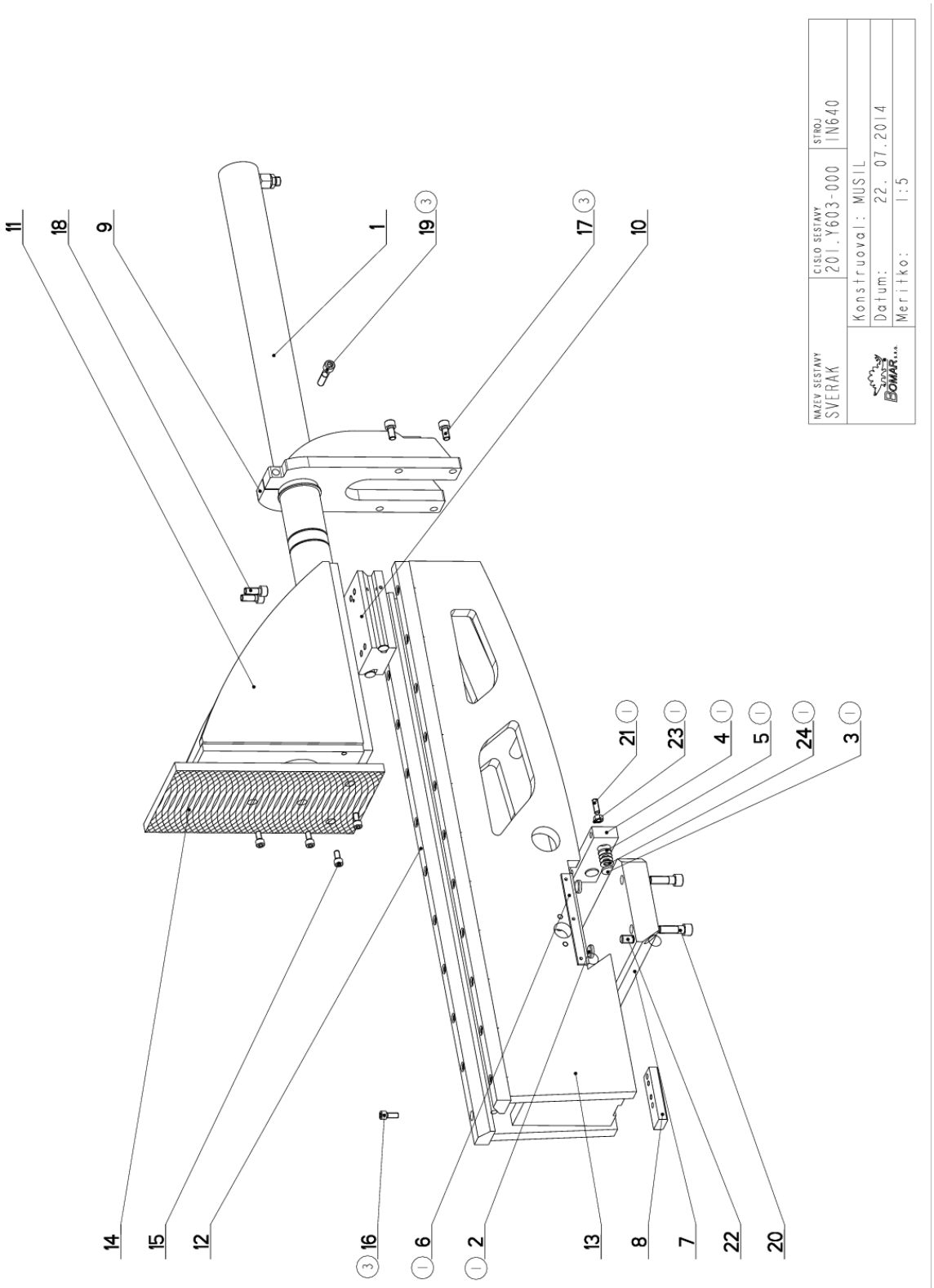

Cislo Sestavy	Ver.	Nazev sestavy
201.Y603-000	3	SVERAK/VICE/SCHRAUBSTOCK

Poz.	Objednaci cislo		Ver.	Nazev polozky	Rozmer	Ks
1	201.Y607-030		1	VALEC SVERAKU / VICE CYLINDER / SCHRAUBSTOCKZYLINDER		1
2	30.0509-608	1	0	LISTA TRECI / FRICTION TRIM / FRIKTIONSLEISTE	d20	4
3	30.0803-005	1	0	DESKA / BOARD / PLATTE		2
4	30.V303-006	1	0	LISTA SVERAKU / VICE TRIM / SCHRAUBSTOCKLEISTE	HR 40x20	1
5	30.V303-010	1	0	PODLOZKA / WASHER / UNTERLEGSCHEIBE	P 2.5x20	2
6	30.V309-011	1	0	STERAC / WIPER / ABSTREIFER	BA18	2
7	30.Y303-001		0	VEDENI / GUIDE / BACKENFÜHRUNG	HR 160x40	1
8	30.Y303-010		0	PRILOZKA / STRAP / LASCHE	HR 30x15	1
9	30.Y303-104		4	DRZAK / HOLDER / HALTER		1
10	30.Y303-206		0	KLUZAK / GLIDER / GLEITER	HR 80x50	1
11	30.Y503-105		2	CELIST / JAW / BACKE		1
12	30.Y603-002		0	LISTA SVERAKU / VICE TRIM / SCHRAUBSTOCKLEISTE	HR 40x25	2
13	30.Y603-003		3	SVERAK / VICE / SCHRAUBSTOCK		1
14	30.Y603-007		0	CELIST / JAW / BACKE	HR 180x15	1
15	90.001.25.031		0	SROUB IMBUS / ALLEN HEAD BOLT / IMBUSSCHRAUBE	8x16	4
16	90.001.25.032	3	0	SROUB IMBUS / ALLEN HEAD BOLT / IMBUSSCHRAUBE	8x20	22
17	90.001.25.046	3	0	SROUB IMBUS / ALLEN HEAD BOLT / IMBUSSCHRAUBE	M10X20	4
18	90.001.25.047		0	SROUB IMBUS / ALLEN HEAD BOLT / IMBUSSCHRAUBE	M10X25	4
19	90.001.25.051	3	0	SROUB IMBUS / ALLEN HEAD BOLT / IMBUSSCHRAUBE	M10X45	1
20	90.001.25.060	1	0	SROUB IMBUS / ALLEN HEAD BOLT / IMBUSSCHRAUBE	M12X40	4
21	90.002.2D.013		0	SROUB STAVECI / ADJUSTMENT BOLT / STELLSCHRAUBE	SROUB M8X25	2
22	90.002.2D.018	1	0	SROUB STAVECI / ADJUSTMENT BOLT / STELLSCHRAUBE	SROUB M12X20	2
23	90.100.55.005	1	0	MATICE / NUT / MUTTER	MATICE _ M8	2
24	90.350.0Z.005		0	PRUZINA TALIROVA / DISC SPRING / TELLERFEDER	20X10.2X1	6

1. PRID. LISTA 30.V303-006;STERAC 30.V309-011;PODLOZKA 30.V303-010;DESKA 30.0803-005; PRUZINA TALOROVA 90.350.0Z.005; SROUB STAVEC M8x25 90.002.2D.013, MATICE M8 90.100.55.005. 250/zm.261 HLADIL 21.9.2010

2. ZRUS.REGULACE TLAKU SVERAKU 201.2115-200. 025/ZM065 8.32013 SLEZACKOVA

3. PRIDAN SROUB 90.001.25.051,20xSROUB 90.001.25.033 NAHRAZEN 90.001.25.032,4xSROUB 90.001.25.049 NAHRAZEN 90.001.25.046. 093/ZM150 22.7.2014 MRKOS

Cislo Sestavy/Number of assembly/Nummer der Baugruppe; Verze (Ver.)/Version/Version; Nazev sestavy/Assembly title/Name der Baugruppe; Pozice (Poz.)/Position/Position; Objednaci cislo/Purchase order number/Bestellnummer; Nazev polozky/Volume title/Name der Position; Rozmer/Stock size/Abmessung

7.59. Válec svěráku / Vice cylinder / Schraubstockzylinder

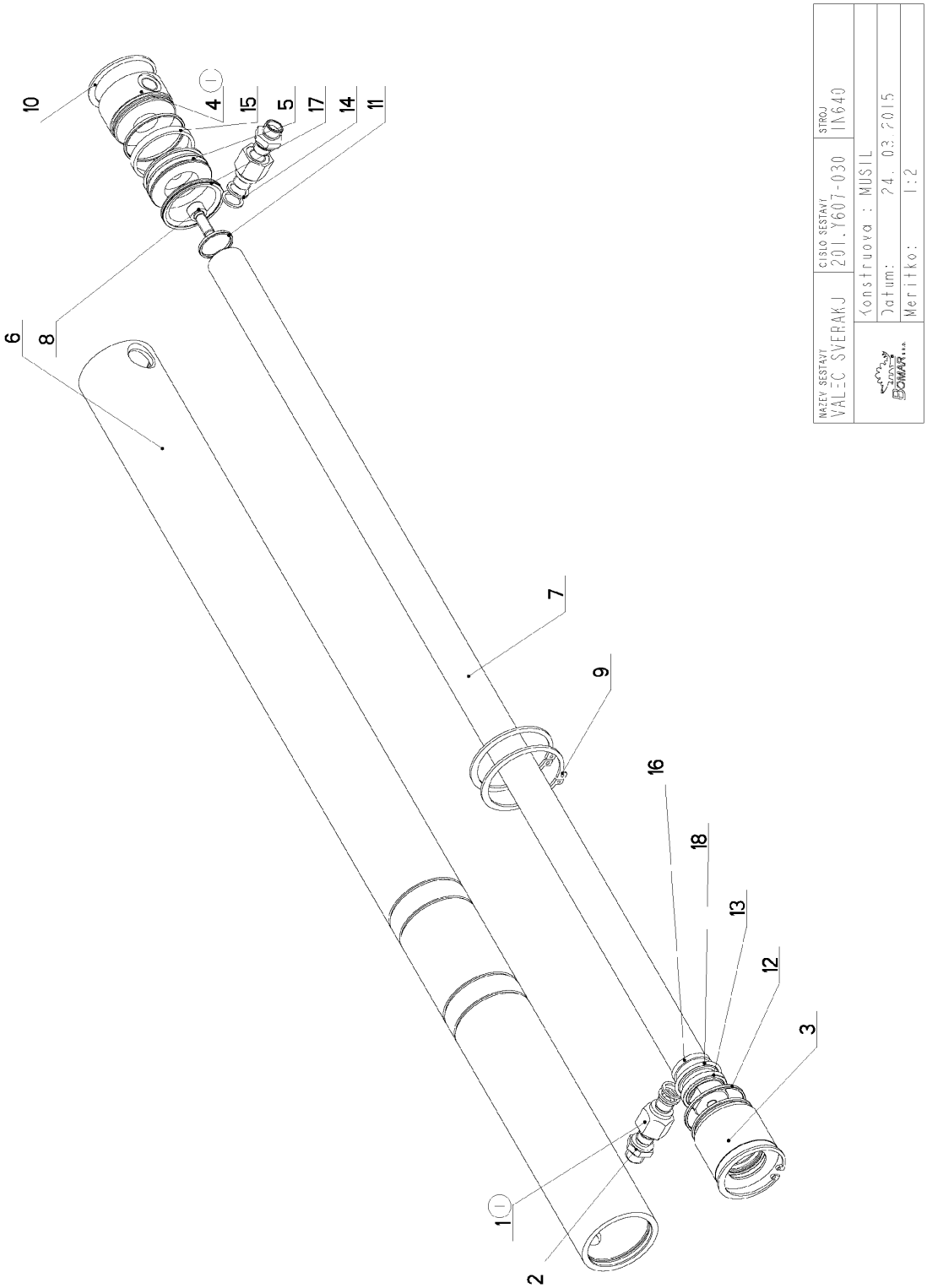

7.60. Kusovník / Piece list / Stückliste -Válec svěráku / Vice cylinder / Schraubstockzylinder

Cislo Sestavy	Ver.	Nazev sestavy
201.Y607-030	1	VALEC SVERAKU/VICE CYLINDER/SCHRAUBSTOCKZYLINDER

Poz.	Objednaci cislo	Ver.	Nazev polozky	Rozmer	Ks
1	30.1807-005 (1)	3	SROUBENI / BOLTING / VERSCHRAUBUNG	6-HR 22	2
2	30.2807-109	0	SROUBENI PRIME / DIRECT BOLTING / GERADE VERSCHRAUBUNG		2
3	30.C407-012	1	VIKO / COVER / DECKEL	d 55	1
4	30.C407-111 (1)	0	VIKO / COVER / DECKEL	d 55	1
5	30.Y307-035	0	PIST / PISTON / KOLBEN	d 55	1
6	30.Y607-033	1	VALEC / ROLLER / ZYLINDER	TR 62/50H8	1
7	30.Y607-034	0	PISTNICE / PISTON ROD / KOLBENSTANGE	d 28 f8	1
8	90.001.25.032	0	SROUB IMBUS / ALLEN HEAD BOLT / IMBUSSCHRAUBE	8x20	1
9	95.800.021	0	SEGR HRIDEL. / OUTSIDE SAFETY RING / SICHERUNGSRING AUSSEN	POJISTNY KROUZEK 62	2
10	95.801.009	0	SEGR DIRA / INSIDE SAFETY RING / SICHERUNGSRING INNEN	POJISTNY KROUZEK 52	2
11	96.002.011	0	KROUZEK O DYNAMICKY / DYNAMIC O RING / O-RING DYNAMISCH	24X2	1
12	96.002.019	0	KROUZEK O DYNAMICKY / DYNAMIC O RING / O-RING DYNAMISCH	46x2 NBR 70SH	2
13	96.061.009	0	KROUZEK STIRACI / SCRAPER RING / ABSTREIFRING	WD2200280 Z201	1
14	96.082.002	0	TESNENI / SEAL RING / DICHTUNGSRING	13/17x1.5 CU	4
15	96.084.001	0	KROUZEK VODICI / LEAD RING / FÜHRUNGSRING	GP6500500-T47	1
16	96.084.006	0	KROUZEK VODICI / LEAD RING / FÜHRUNGSRING	GR4300280-T47	1
17	96.900.001	0	TESNENI KOMBINOVANE / COMBINATION SEALING / KOMBIDICHTUNG	PW4200500-Z20N	1
18	96.900.021	0	TESNENI KOMBINOVANE / COMBINATION SEALING / KOMBIDICHTUNG	RSK200280-46N	1

1. VIKO 30.C407-011 NAHRAZENO VIKEM 30.C407-111; SROUBENI 30.3407-103 NAHRAZENO SROUBENIM 30.1807-005;
121/zm.093 HLADIL 9.4.2010

Cislo Sestavy/Number of assembly/Nummer der Baugruppe; Verze (Ver.)/Version/Version; Nazev sestavy/Assembly title/Name der Baugruppe; Pozice (Poz.)/Position/Position;
Objednaci cislo/Purchase order number/Bestellnummer; Nazev polozky/Volume title/Name der Position; Rozmer/Stock size/Abmessung

8. Výkresy sestav pro objednání náhradních dílů / Zeichnungen für Bestellung der Ersatzteile / Drawing assemblies for spare parts orders Individual 820.640 DGH – bez rozvaděče/ without switchboard/ ohne elektrisch vertailer

Pozor!

Součásti, u kterých není zařazen výkres, jsou shodné se sestavou pily Individual 620-460 DGH - standard.

Caution!

These parts which haven´t any drawing included in this chapter are identical with parts from the assembly of the band saw Individual 620-460 DGH - standard.

Achtung!

Die Teile, bei denen es keine Zeichnung gibt, sind mit der Zusammenstellung der Säge Individual 620-460 DGH - standard identisch.

8.1. Individual 820.640 DGH – bez rozvaděče/ without switchboard/ ohne elektrisch vertailer

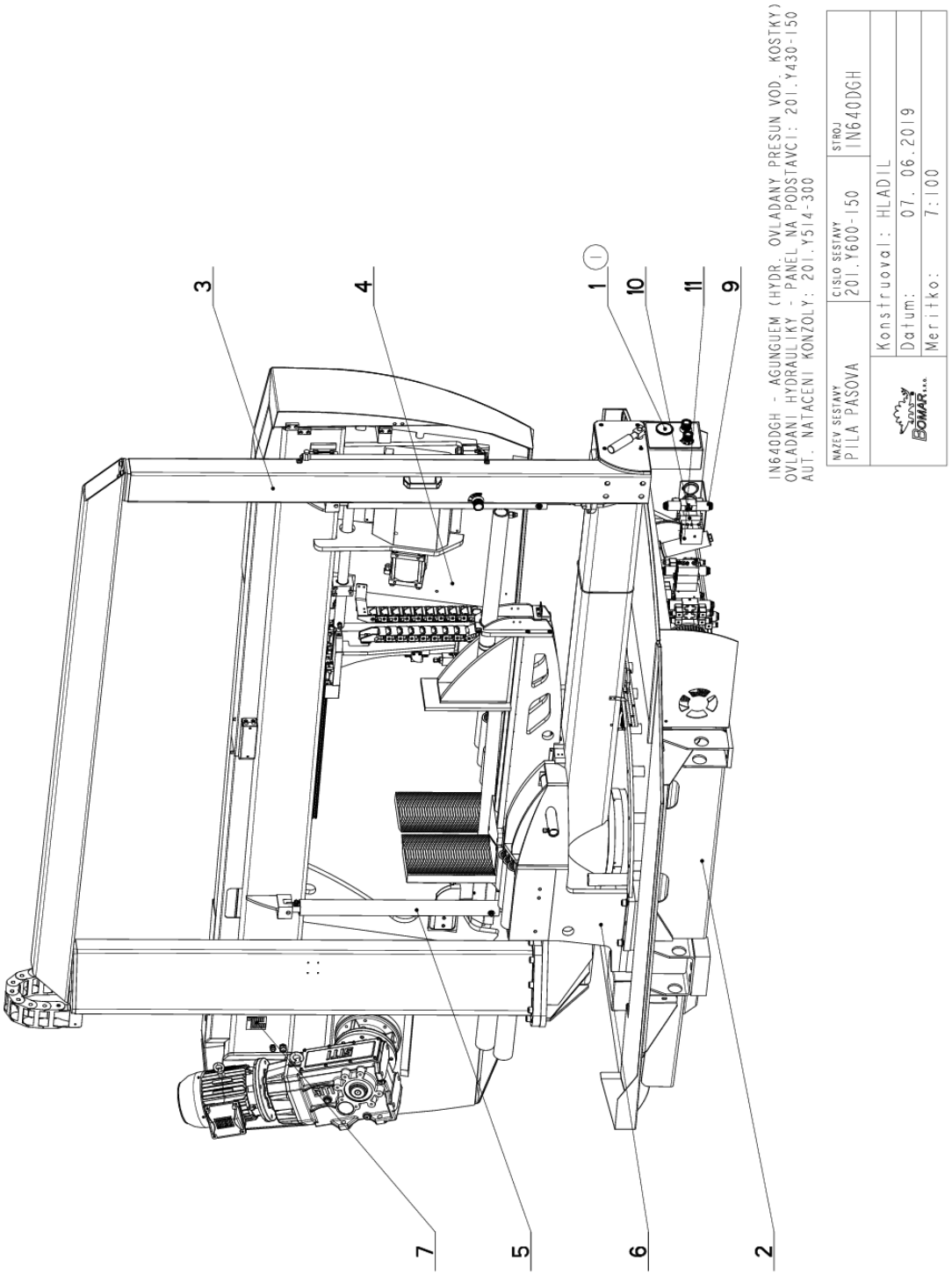

8.2. Kusovník / Piece list / Stückliste
Individual 820.640 DGH – bez rozvaděče/ without switchboard/ ohne elektrisch vertailer

Cislo Sestavy	Ver.	Nazev sestavy
201.Y600-150	1	PILA PASOVA/BAND SAW/BANDSÄGE

Poz.	Objednaci cislo	Ver.	Nazev polozky	Rozmer	Ks
1	201.Y430-150 (1)	0	PANEL / PANEL / PANEL		1
2	201.Y601-100	6	PODSTAVEC / BASE / UNTERSATZ		1
3	201.Y602-100	3	KONZOLA / CONSOLE / KONSOLE		1
4	201.Y604-250	1	RAMENO / SHOULDER / SÄGERAHMEN		1
5	201.Y607-010	5	VALEC ZVEDACI / LIFTING CYLINDER / HEBEZYLINDER		2
6	201.Y609-000	5	SVERAK / VICE / SCHRAUBSTOCK		1
7	30.Y699-001	5	STITEK TYPOVY / /	P 0.5x65	1
8	31.0899-004	0	SAMOLEPKA / STICKER / AUFKLEBER		1
9	92.101.005	0	VENTIL / VALVE / VENTIL	RPE3-043Y11E1	1
10	92.103.003	0	ZAMEK / DISTRIBUTOR LOCK / VERTEILERSCHLOSS		1
11	92.105.020	0	DESKA / BOARD / PLATTE	PD04A2-SMA	1
12	99.900.039	0	SAMOLEPKA / STICKER / AUFKLEBER	NEBEZP.STLACENI	1
13	99.900.040	0	SAMOLEPKA / STICKER / AUFKLEBER		1
14	99.900.043	0	SAMOLEPKA / STICKER / AUFKLEBER		1
15	99.900.047	0	SAMOLEPKA / STICKER / AUFKLEBER		1
16	99.900.048	0	SAMOLEPKA / STICKER / AUFKLEBER		1
17	99.900.049	0	SAMOLEPKA / STICKER / AUFKLEBER		1
18	99.900.053	0	SAMOLEPKA / STICKER / AUFKLEBER		1
19	99.901.031	0	SAMOLEPKA / STICKER / AUFKLEBER	IN820.640 DGH	1
20	99.901.032	0	SAMOLEPKA / STICKER / AUFKLEBER	CETIFIKACNI SAMOLEPKA	1

1.PRID. PANEL 201.Y430-150. 166/ZM219 5.6.2019 SZABARI

Cislo Sestavy/Number of assembly/Nummer der Baugruppe; Verze (Ver.)/Version/Version; Nazev sestavy/Assembly title/Name der Baugruppe; Pozice (Poz.)/Position/Position; Objednaci cislo/Purchase order number/Bestellnummer; Nazev polozky/Volume title/Name der Position; Rozmer/Stock size/Abmessung

8.3. Individual 820.640 DGH – bez rozvaděče/ without switchboard/ ohne elektrisch vertailer

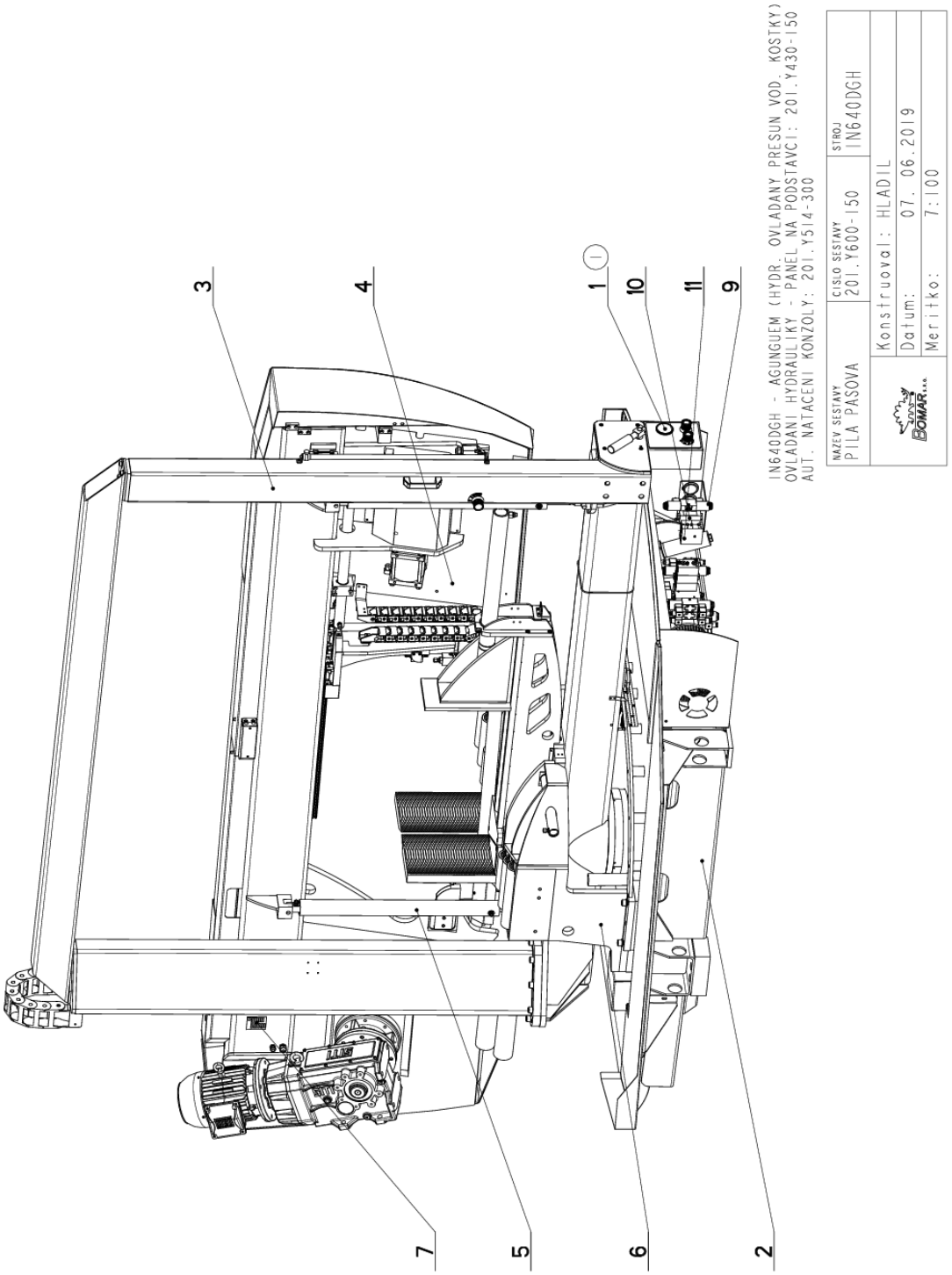

8.4. Kusovník / Piece list / Stückliste

Individual 820.640 DGH – bez rozvaděče/ without switchboard/ ohne elektrisch vertailer

Cislo Sestavy	Ver.	Nazev sestavy
201.Y600-150	1	PILA PASOVA/BAND SAW/BANDSÄGE

Poz.	Objednaci cislo	Ver.	Nazev polozky	Rozmer	Ks
1	201.Y430-150 (1)	0	PANEL / PANEL / PANEL		1
2	201.Y601-100	6	PODSTAVEC / BASE / UNTERSATZ		1
3	201.Y602-100	3	KONZOLA / CONSOLE / KONSOLE		1
4	201.Y604-250	1	RAMENO / SHOULDER / SÄGERAHMEN		1
5	201.Y607-010	5	VALEC ZVEDACI / LIFTING CYLINDER / HEBEZYLINDER		2
6	201.Y609-000	5	SVERAK / VICE / SCHRAUBSTOCK		1
7	30.Y699-001	5	STITEK TYPOVY / /	P 0.5x65	1
8	31.0899-004	0	SAMOLEPKA / STICKER / AUFKLEBER		1
9	92.101.005	0	VENTIL / VALVE / VENTIL	RPE3-043Y11E1	1
10	92.103.003	0	ZAMEK / DISTRIBUTOR LOCK / VERTEILERSCHLOSS		1
11	92.105.020	0	DESKA / BOARD / PLATTE	PD04A2-SMA	1
12	99.900.039	0	SAMOLEPKA / STICKER / AUFKLEBER	NEBEZP.STLACENI	1
13	99.900.040	0	SAMOLEPKA / STICKER / AUFKLEBER		1
14	99.900.043	0	SAMOLEPKA / STICKER / AUFKLEBER		1
15	99.900.047	0	SAMOLEPKA / STICKER / AUFKLEBER		1
16	99.900.048	0	SAMOLEPKA / STICKER / AUFKLEBER		1
17	99.900.049	0	SAMOLEPKA / STICKER / AUFKLEBER		1
18	99.900.053	0	SAMOLEPKA / STICKER / AUFKLEBER		1
19	99.901.031	0	SAMOLEPKA / STICKER / AUFKLEBER	IN820.640 DGH	1
20	99.901.032	0	SAMOLEPKA / STICKER / AUFKLEBER	CETIFIKACNI SAMOLEPKA	1

1.PRID. PANEL 201.Y430-150. 166/ZM219 5.6.2019 SZABARI

Cislo Sestavy/Number of assembly/Nummer der Baugruppe; Verze (Ver.)/Version/Version; Nazev sestavy/Assembly title/Name der Baugruppe; Pozice (Poz.)/Position/Position; Objednaci cislo/Purchase order number/Bestellnummer; Nazev polozky/Volume title/Name der Position; Rozmer/Stock size/Abmessung

8.5. Rameno / Saw arm / Sägerahmen

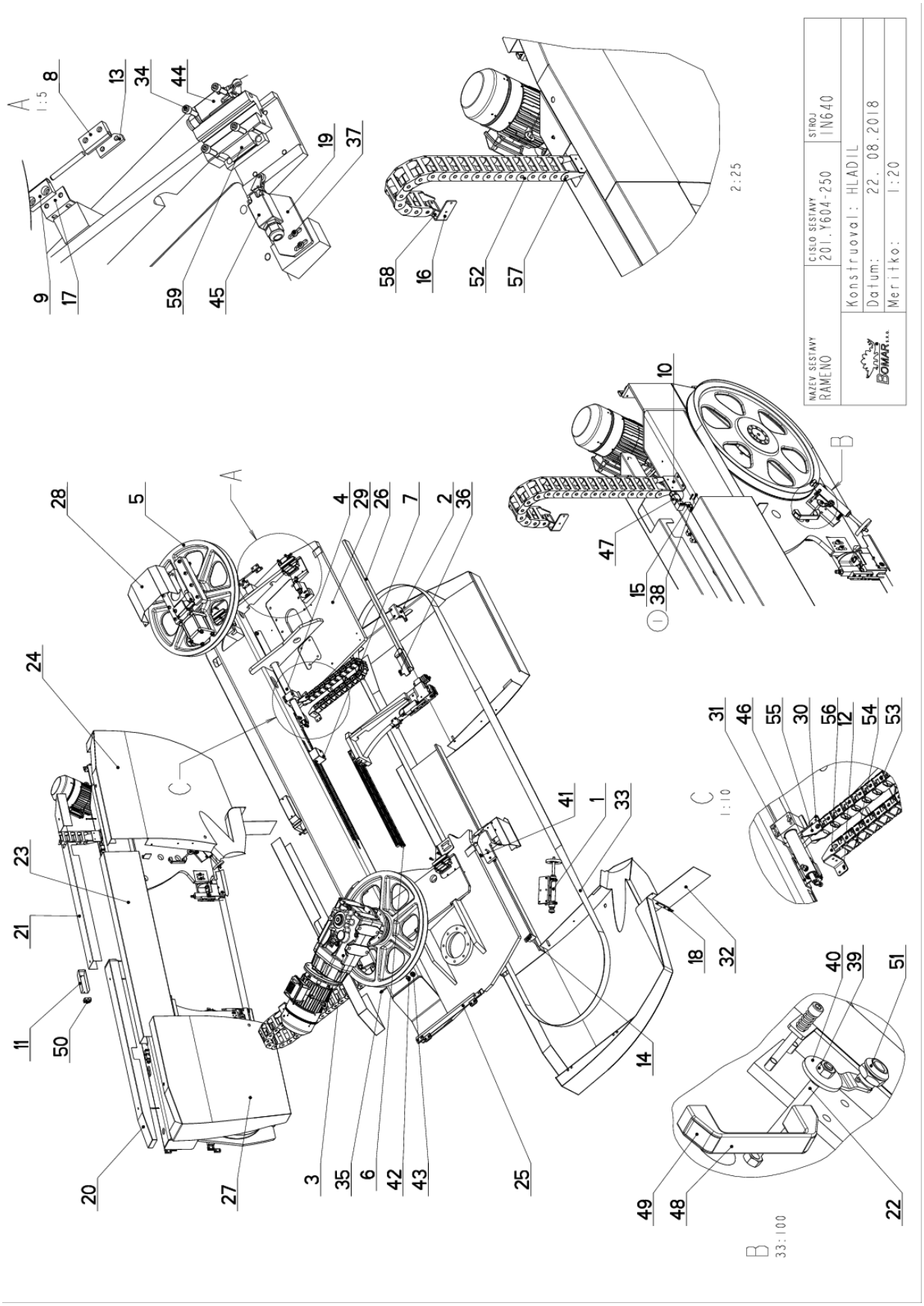

8.6. Kusovník / Piece list / Stückliste - Rameno / Saw arm / Sägerahmen

Cislo Sestavy	Ver.	Nazev sestavy
201.Y604-250	1	RAMENO/SHOULDER/SÄGERAHMEN

Poz.	Objednaci cislo	Ver.	Nazev polozky	Rozmer	Ks
1	201.6114-100	1	KARTAC / BRUSH / BÜRSTE		1
2	201.Y604-070	0	VEDENI / GUIDE / BACKENFÜHRUNG		1
3	201.Y605-100	1	POHON / DRIVE / ANTRIEB		1
4	201.Y607-150	0	VALEC NAPINACI / TENSIONING CYLINDER / SPANNZYLINDER	D30/16	1
5	201.Y608-100	4	NAPINANI / TENSIONING / SPANNUNG		1
6	201.Y610-050	0	VEDENI PASU / BELT GUIDE / SÄGEBANDFÜHRUNG		1
7	201.Y614-080	0	ODMEROVANI / MEASURING / GEHRUNGSMESSUNG		1
8	30.6014-109	1	PANT / HINGE / TÜRBAND		4
9	30.6014-110	1	PANT / HINGE / TÜRBAND	HR 30x12	4
10	30.7114-142	2	DRZAK / HOLDER / HALTER	P 4x100	1
11	30.8914-220	1	KRYT / COVER / ABDECKUNG	P 1.5x153	1
12	30.P404-111	0	DRZAK / HOLDER / HALTER	P4x40	1
13	30.Y304-035	0	DESKA / BOARD / PLATTE	HR 20x5	4
14	30.Y304-038	0	ZAMEK / LOCK / SCHLOSS	P4 - 67	2
15	30.Y304-039	0	DRZAK / HOLDER / HALTER	P 3x34	2
16	30.Y404-005	0	DRZAK / HOLDER / HALTER	P 5x50	1
17	30.Y404-034	1	DRZAK / HOLDER / HALTER	L 30x20x3	1
18	30.Y504-030	0	PLECH / PLATE / BLECH	P 1x15	1
19	30.Y604-003	0	DRZAK / HOLDER / HALTER	P 5x60	1
20	30.Y604-018	0	KRYT / COVER / ABDECKUNG		1
21	30.Y604-019	0	KRYT / COVER / ABDECKUNG	P2 - 275	1
22	30.Y604-020	0	TYC ZAVITOVA / THREADED POLE / GEWINDESTANGE	M10	2
23	30.Y604-022	0	KRYT / COVER / ABDECKUNG		1
24	30.Y604-031	1	KRYT RAMENE / SHOULDER COVER / RAHMENABDECKUNG		1
25	30.Y604-035	0	DRZAK / HOLDER / HALTER	L 30x20x3	1
26	30.Y604-109	1	KRYT PASU / BELT COVER / BANDABDECKUNG		1
27	30.Y604-132	0	KRYT RAMENE / SHOULDER COVER / RAHMENABDECKUNG		1
28	30.Y604-202	0	KRYT / COVER / ABDECKUNG	P 1,5x225	1
29	30.Y604-251	0	RAMENO / SHOULDER / SÄGERAHMEN	SVARENO	1
30	30.Y604-255	0	DRZAK / HOLDER / HALTER	P4x60	1
31	30.Y604-257	0	DRZAK / HOLDER / HALTER	P4x89	1
32	31.PK02-054	0	GUMA / RUBBER / GUMMI	G2 - 206	1
33	44.103.012	0	PAS PILOVY / SAW BELT / SÄGEBAND	54x1,6M42 z=2/3	1
34	90.001.25.033	0	SROUB IMBUS / ALLEN HEAD BOLT / IMBUSSCHRAUBE	8x25	16

Cislo Sestavy/Number of assembly/Nummer der Baugruppe; Verze (Ver.)/Version/Version; Nazev sestavy/Assembly title/Name der Baugruppe; Pozice (Poz.)/Position/Position; Objednaci cislo/Purchase order number/Bestellnummer; Nazev polozky/Volume title/Name der Position; Rozmer/Stock size/Abmessung

8.7. Rameno / Saw arm / Sägerahmen

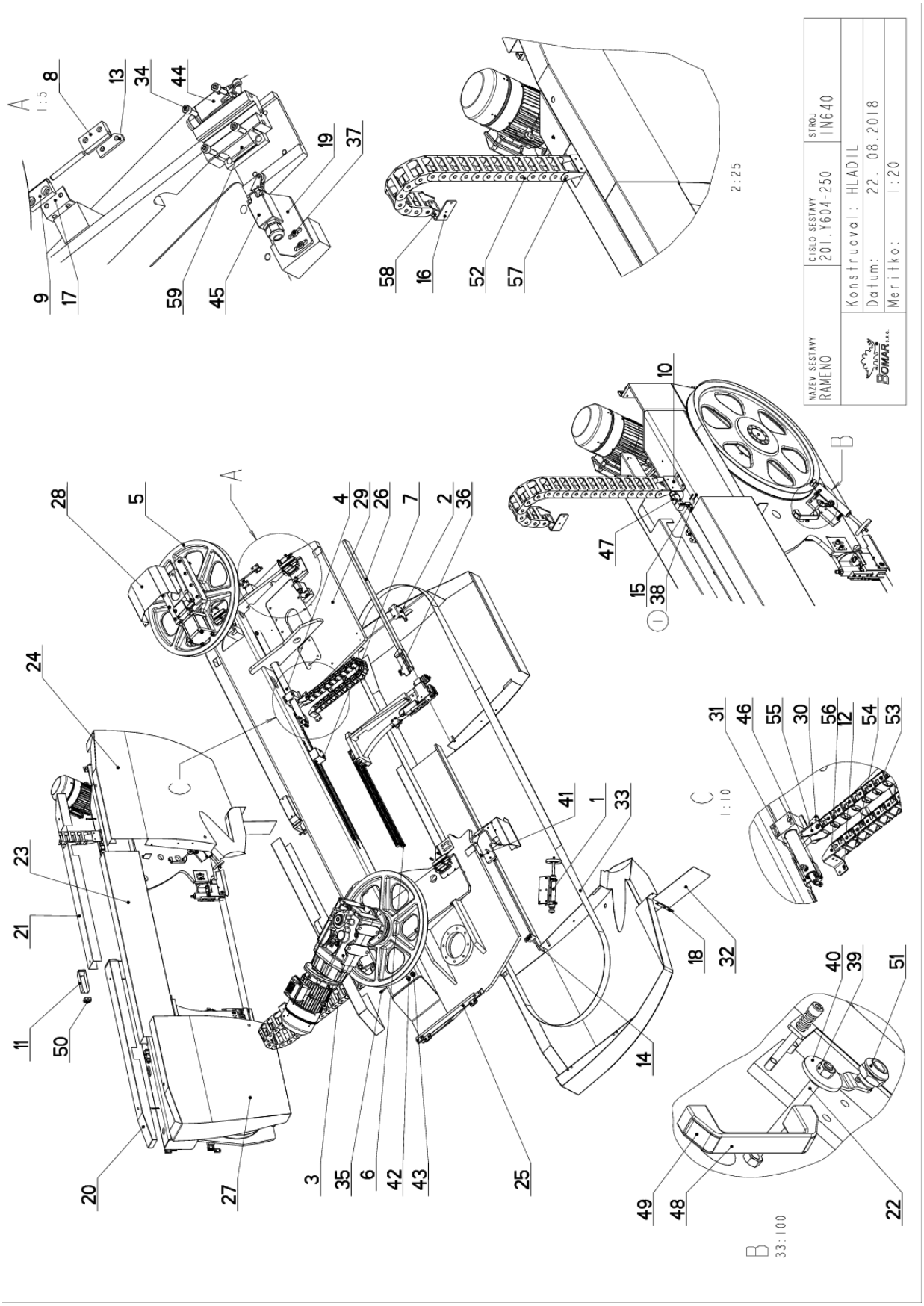

35	90.001.25.070	0	SROUB IMBUS / ALLEN HEAD BOLT / IMBUSSCHRAUBE	M6x90	4
36	90.001.25.092	0	SROUB IMBUS / ALLEN HEAD BOLT / IMBUSSCHRAUBE	M6X14	1
37	90.013.27.007	0	SROUB PULKULATY / HALF ROUND BOLT / HALBRUNDSCHRAUBE	M6X10	2
38	90.013.9Z.104 (1)	0	SROUB PULKULATY / HALF ROUND BOLT / HALBRUNDSCHRAUBE	M4x30	4
39	90.100.55.006	0	MATICE / NUT / MUTTER	MATICE _ M10	6
40	90.151.50.002	0	PODLOZKA / WASHER / UNTERLEGSCHEIBE	PODLOZKA 12	2
41	90.300.0Z.011	0	KOLIK VALC. KAL. / CYLINDRICAL PIN TEMPERED / ZYLINDERSTIFT GEHARTET	KOLIK 8X40	2
42	91.070.011	0	VYVODKA / BUSHING / TŮLLE	M16x1.5	1
43	91.070.012	0	VYVODKA / BUSHING / TŮLLE	M20x1.5	1
44	91.173.009	0	SPINAC KONC.S KLADK. / END SWITCH WITH PULLEY / ENDSCHALTER MIT ROLLE		1
45	91.173.009	0	SPINAC KONCOVY / END SWITCH / ENDSCHALTER	FR 605-M2	1
46	91.173.009	0	SPINAC KONCOVY / END SWITCH / ENDSCHALTER		1
47	91.173.012	0	SPINAC KONCOVY / END SWITCH / ENDSCHALTER	QKS8-2xNC	2
48	94.012.001	0	RUKOJET / HANDLE / GRIFF		2
49	94.012.002	0	ZATKA / PLUG / STOPFEN		4
50	94.204.005	0	DRZAK / HOLDER / HALTER	LBG 14/14-PP	2
51	99.104.002	0	ZAMEK / LOCK / SCHLOSS	ZAMEK CINSKY	2
52	99.170.001	0	RETEZ ENERGII / ENERGY BELT / ENERGIEKETTE	0555.030.075.100	19
53	99.170.053	0	RETEZ ENERGII / ENERGY BELT / ENERGIEKETTE	37x26-R50	20
54	99.170.068	0	PRICKA / BRACE / QUERLATTE		20
55	99.171.021	0	KONCOVKA / END / ENDSTŮCK		1
56	99.171.022	0	KONCOVKA / END / ENDSTŮCK		1
57	99.173.001	0	RETEZ ENERGII / ENERGY BELT / ENERGIEKETTE	KONCOVKA VNEJ	1
58	99.173.002	0	RETEZ ENERGII / ENERGY BELT / ENERGIEKETTE	KONCOVKA VNIT	1
59	99.201.056	0	VOZIK LINEARNIHO VEDENI / LINEAR GUIDE CART / LINEARFUHRUNGSWAGEN	MSA35ESSFON	4

1.PRID. 4xSROUB M4x30 90.013.9Z.104. 171/ZM290 22.8.2018 SZABARI

Cisla Sestavy/Number of assembly/Nummer der Baugruppe; Verze (Ver.)/Version/Version; Nazev sestavy/Assembly title/Name der Baugruppe; Pozice (Poz.)/Position/Position;
Objednaci cislo/Purchase order number/Bestellnummer; Nazev polozky/Volume title/Name der Position; Rozmer/Stock size/Abmessung

8.9. Válec napínací / Tensioning cylinder / Spannzylinder

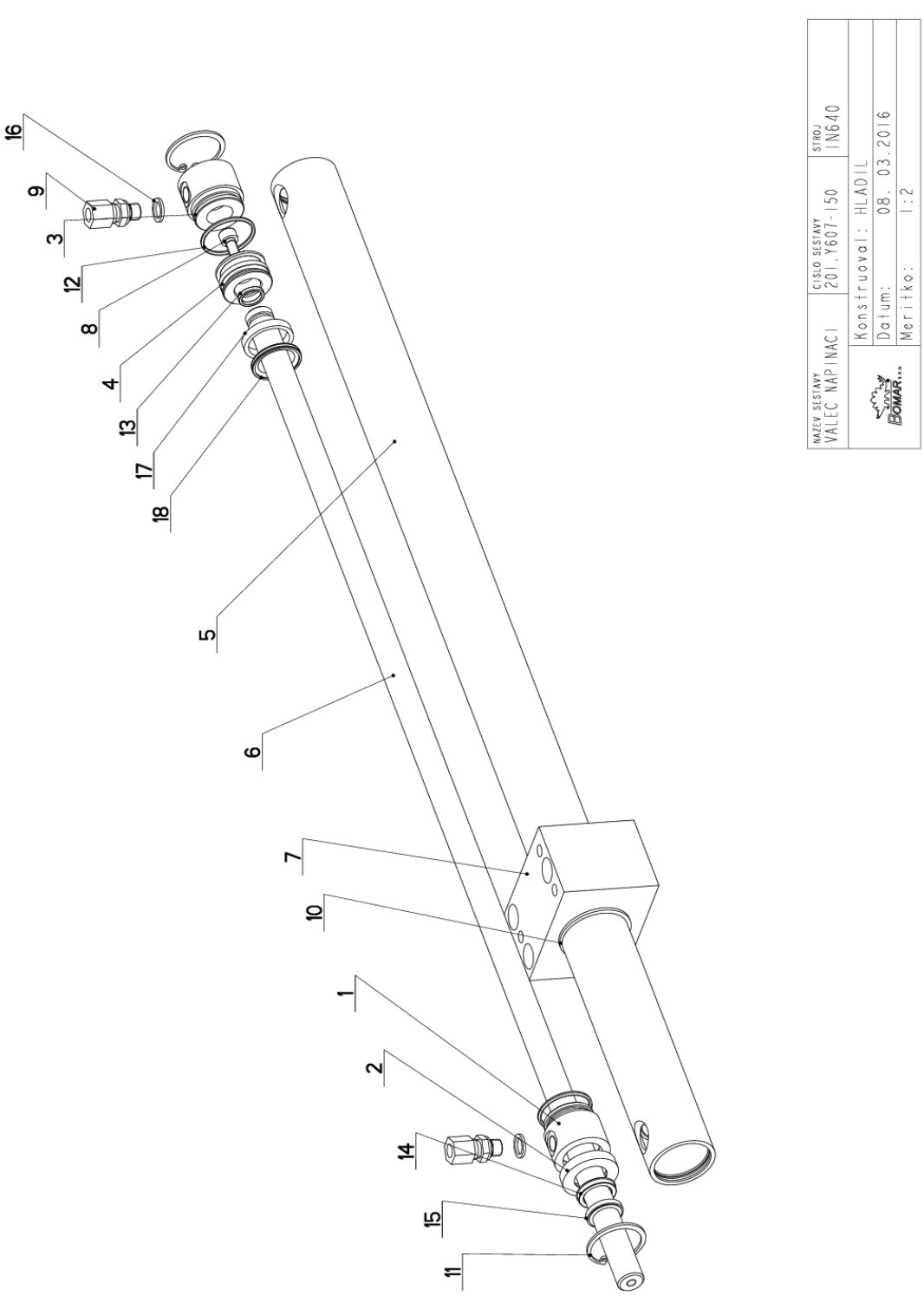

8.10. Kusovník / Piece list / Stückliste - Válec napínací / Tensioning cylinder / Spannzylinder

Cislo Sestavy	Ver.	Nazev sestavy
201.Y607-150	0	VALEC NAPINACI/TENSIONING CYLINDER/SPANNZYLINDER

Poz.	Objednaci cislo	Ver.	Nazev polozky	Rozmer	Ks
1	30.6807-103	2	VIKO / COVER / DECKEL	TYC 35	1
2	30.6807-104	1	VIKO / COVER / DECKEL	TYC 35	1
3	30.6807-105		VIKO / COVER / DECKEL	TYC 35	1
4	30.6807-106	0	PIST / PISTON / KOLBEN	TYC 32	1
5	30.Y607-151	0	VALEC / ROLLER / ZYLINDER	TR 40/30H8	1
6	30.Y607-152	0	PISTNICE / PISTON ROD / KOLBENSTANGE	d 16	1
7	30.Y607-153	0	KOSTKA / CUBE / WURFEL	HR 80x50	1
8	90.001.25.017	0	SROUB IMBUS / ALLEN HEAD BOLT / IMBUSSCHRAUBE	M6X16	1
9	92.002.102	0	SROUBENI / BOLTING / VERSCHRAUBUNG	S-GEV-8LLR	2
10	95.800.015	0	SEGR HRIDEL. / OUTSIDE SAFETY RING / SICHERUNGSRING AUSSEN	POJISTNY KROUZEK 40	2
11	95.801.026	0	SEGR DIRA / OUTSIDE SAFETY RING / SICHERUNGSRING AUSSEN	POJISTNY KROUZEK 34	2
12	96.001.008	0	O-KROUZEK STATIC / STATIC O RING / O-RING STATISCH	26x2 NBR 70SH	2
13	96.002.006	0	KROUZEK O DYNAMICKY / DYNAMIC O RING / O-RING DYNAMISCH	12x2 NBR 70SH	1
14	96.041.001	0	TESNENI / SEALING / DICHTUNG	16x24x4 UN	1
15	96.060.001	0	KROUZEK STIRACI / SCRAPER RING / ABSTREIFRING	16x22 NBR 70	1
16	96.082.001	0	KROUZEK TESNICI / SEAL RING / DICHTUNGSRING	10/14x1.5 CU	2
17	96.084.005	0	KROUZEK VODICI / LEAD RING / FÜHRUNGSRING	GP6500300-T47	1
18	96.900.007	0	TESNENI KOMBINOVANE / COMBINATION SEALING / KOMBIDICHTUNG	PW4100300-Z20	1

Cislo Sestavy/Number of assembly/Nummer der Baugruppe; Verze (Ver.)/Version/Version; Nazev sestavy/Assembly title/Name der Baugruppe; Pozice (Poz.)/Position/Position; Objednaci cislo/Purchase order number/Bestellnummer; Nazev polozky/Volume title/Name der Position; Rozmer/Stock size/Abmessung

8.11. Vedení pásu / Belt guide / Sägebandführung

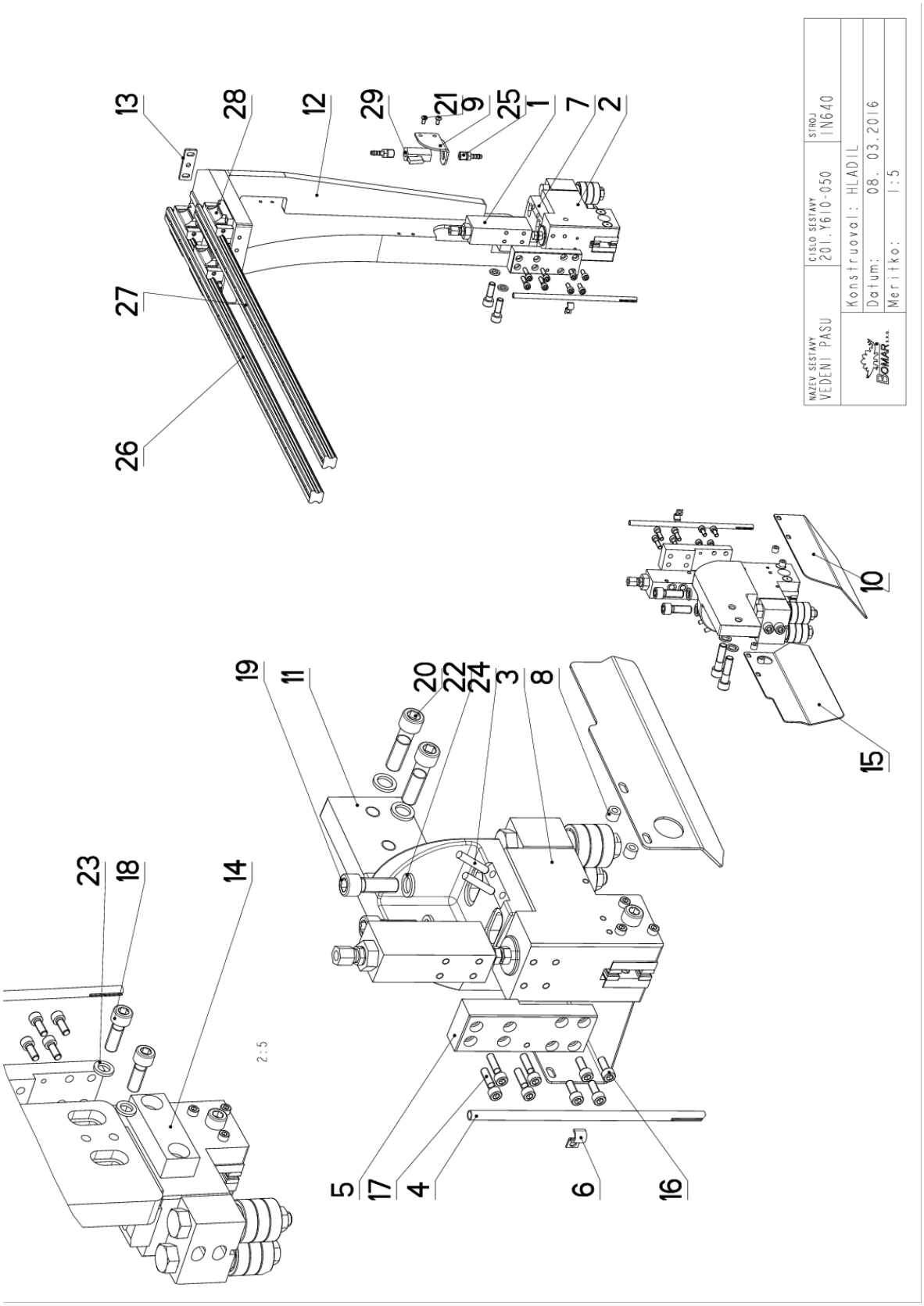

8.12. Kusovník / Piece list / Stückliste - Vedení pásu / Belt guide / Sägebandführung

Cislo Sestavy	Ver.	Nazev sestavy
201.Y610-050	0	VEDENI PASU/BELT GUIDE/SÄGEBANDFÜHRUNG

Poz.	Objednaci cislo	Ver.	Nazev polozky	Rozmer	Ks
1	201.6816-100	0	KOSTKA REGULACE / REGULATION CUBE / REGELUNGSWÜRFEL		2
2	201.Y610-100	1	KOSTKA VODICI / LEAD CUBE / FÜHRUNGSKLOTZ		1
3	201.Y610-200	1	KOSTKA VODICI / LEAD CUBE / FÜHRUNGSKLOTZ		1
4	30.6010-315	0	TRUBKA / TUBE / ROHR	TR 8x 1	2
5	30.6016-002	0	DESKA / BOARD / PLATTE	HR 40x20	2
6	30.9010-003	0	DRZAK / HOLDER / HALTER	P1.5x10	2
7	30.P410-304	1	DRZAK / HOLDER / HALTER		1
8	30.Y310-007	0	KROUZEK / RING / RING	TR 10x2,5	4
9	30.Y310-008		DRZAK / HOLDER / HALTER	P3-50	1
10	30.Y410-108	0	KRYT PASU / BELT COVER / BANDABDECKUNG	P 2x108	1
11	30.Y510-005	1	DRZAK / HOLDER / HALTER	-	1
12	30.Y610-054	0	KONZOLA / CONSOLE / KONSOLE		1
13	30.Y610-055	0	PRILOZKA / STRAP / LASCHE	P4x20	1
14	30.Y610-056	0	HRANOL / BLOCK / PRISMA	HR 30x20	1
15	30.Y610-107	0	KRYT PASU / BELT COVER / BANDABDECKUNG	P 2x108	1
16	90.001.25.017	0	SROUB IMBUS / ALLEN HEAD BOLT / IMBUSSCHRAUBE	M6X16	8
17	90.001.25.019	0	SROUB IMBUS / ALLEN HEAD BOLT / IMBUSSCHRAUBE	M6X25	8
18	90.001.25.048	0	SROUB IMBUS / ALLEN HEAD BOLT / IMBUSSCHRAUBE	M10X30	2
19	90.001.25.059	0	SROUB IMBUS / ALLEN HEAD BOLT / IMBUSSCHRAUBE	M12X35	2
20	90.001.25.061	0	SROUB IMBUS / ALLEN HEAD BOLT / IMBUSSCHRAUBE	M12X45	2
21	90.013.27.003	0	SROUB / BOLT / SCHRAUBE	M5X10	2
22	90.163.00.003	0	PODLOZKA / WASHER / UNTERLEGSCHEIBE	NORD-LOCK	4
23	90.163.00.004	0	PODLOZKA / WASHER / UNTERLEGSCHEIBE	NORD-LOCK	2
24	90.300.02.007	0	KOLIK VALC. KAL. / CYLINDRICAL PIN TEMPERED / ZYLINDERSTIFT GEHARTET	KOLIK 6X36	2
25	94.202.002	0	REDUKCE / REDUCTION / ADAPTOR / REDUKTION	REDUKCE 6/R1/4"	2
26	99.200.270	0	VEDENI LINEARNI / LINEAR GUIDE / LINEARE FUHRUNG	MSA 25R 900 30/30N	1
27	99.200.477	0	VEDENI LINEARNI / LINEAR GUIDE / LINEARE FÜHRUNG	MSA25R 800-10/10 N	1
28	99.201.046	0	VOZIK LINEARNIHO VEDENI / LINEAR GUIDE CART / LINEARFUHRUNGSWAGEN	MSA25ESSFIN	3
29	99.260.003	0	VENTIL / VALVE / VENTIL	1/4"	1

Cislo Sestavy/Number of assembly/Nummer der Baugruppe; Verze (Ver.)/Version/Version; Nazev sestavy/Assembly title/Name der Baugruppe; Pozice (Poz.)/Position/Position; Objednaci cislo/Purchase order number/Bestellnummer; Nazev polozky/Volume title/Name der Position; Rozmer/Stock size/Abmessung

Cislo Sestavy	Ver.	Nazev sestavy
201.Y614-080	0	ODMEROVANI/MEASURING/GEHRUNGSMESSUNG

Poz.	Objednaci cislo	Ver.	Nazev polozky	Rozmer	Ks
1	30.1504-017	0	STERAC / WIPER / ABSTREIFER	P 0,3x11	2
2	30.V302-131	0	DRZAK / HOLDER / HALTER	HR 25x35	1
3	30.V302-133	0	PERO / SPRING / FEDER	HR 10x6	1
4	30.Y614-081	0	LISTA / TRIM / LEISTE	HR 18x6	1
5	30.Y614-083	0	DRZAK / HOLDER / HALTER	P5x60	1
6	30.Y614-084	0	KRYT / COVER / ABDECKUNG	P1,5x123	1
7	31.1605-121	0	PRUZINA / SPRING / FEDER	1x9.5x12x4	1
8	55.800.009	0	PLECH / PLATE / BLECH	P 0,3x15	1
9	90.001.25.004	0	SROUB IMBUS / ALLEN HEAD BOLT / IMBUSSCHRAUBE	M4X16	2
10	90.001.25.092	0	SROUB IMBUS / ALLEN HEAD BOLT / IMBUSSCHRAUBE	M6X14	1
11	90.013.27.002	0	SROUB PULKULATY / HALF ROUND BOLT / HALBRUNDSCHRAUBE	M5X6	2
12	90.150.50.002	0	PODLOZKA / WASHER / UNTERLEGSCHEIBE	PODLOZKA 4,3	2
13	91.271.002	0	PASKA MAGNETICKA / MAGNETIC TAPE / MAGNETBAND	ELGO MB20-50	1
14	92.270.018	0	SNIMAC MAGNET. / MAGNETIC SENSOR / MAGNETSENSOR	ELGO	1

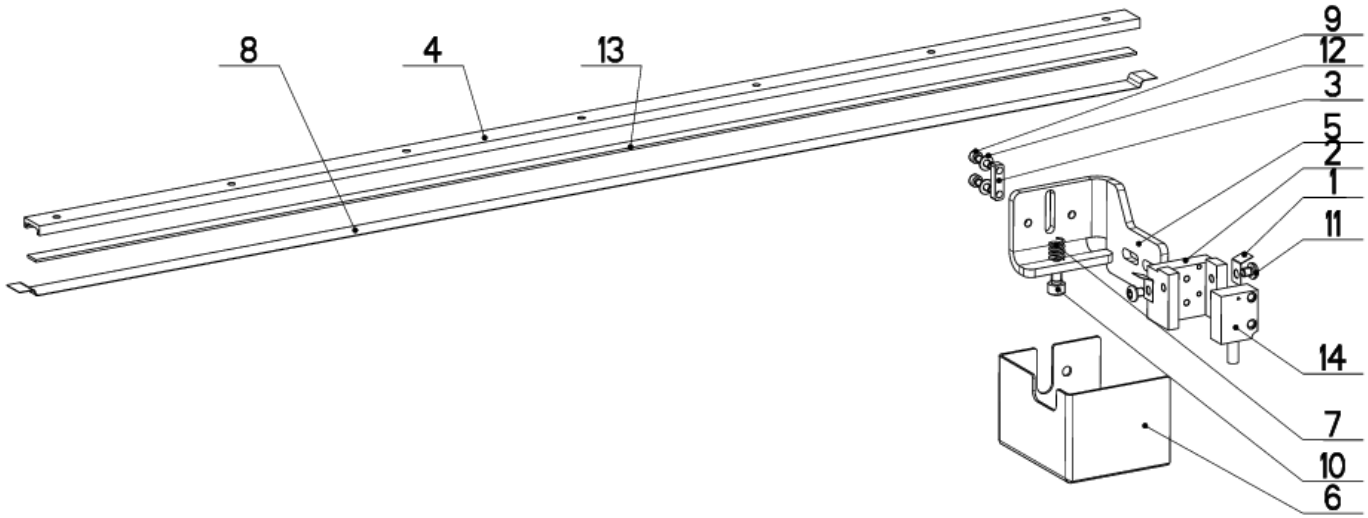

Cislo Sestavy/Number of assembly/Nummer der Baugruppe; Verze (Ver.)/Version/Version; Nazev sestavy/Assembly title/Name der Baugruppe; Pozice (Poz.)/Position/Position; Objednaci cislo/Purchase order number/Bestellnummer; Nazev polozky/Volume title/Name der Position; Rozmer/Stock size/Abmessung

8.14. Panel / Panel / Panel

Cislo Sestavy	Ver.	Nazev sestavy
201.Y430-150	0	PANEL/PANEL /PANEL

Poz.	Objednaci cislo	Ver.	Nazev polozky	Rozmer	Ks
1	201.R230-220	1	OVLADACI PANEL / CONTROL PANEL / BEDIENPULT		1
2	30.Y430-151	0	PLECH / PLATE / BLECH	P1,5x100	1

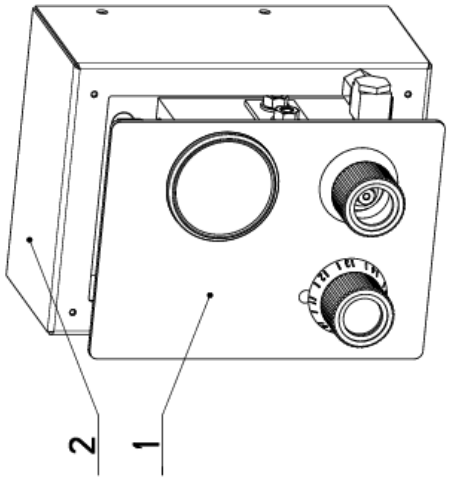

Cislo Sestavy/Number of assembly/Nummer der Baugruppe; Verze (Ver.)/Version/Version; Nazev sestavy/Assembly title/Name der Baugruppe; Pozice (Poz.)/Position/Position;
Objednaci cislo/Purchase order number/Bestellnummer; Nazev polozky/Volume title/Name der Position; Rozmer/Stock size/Abmessung

8.15. Ovládací panel/ Control panel/ Bedienpult

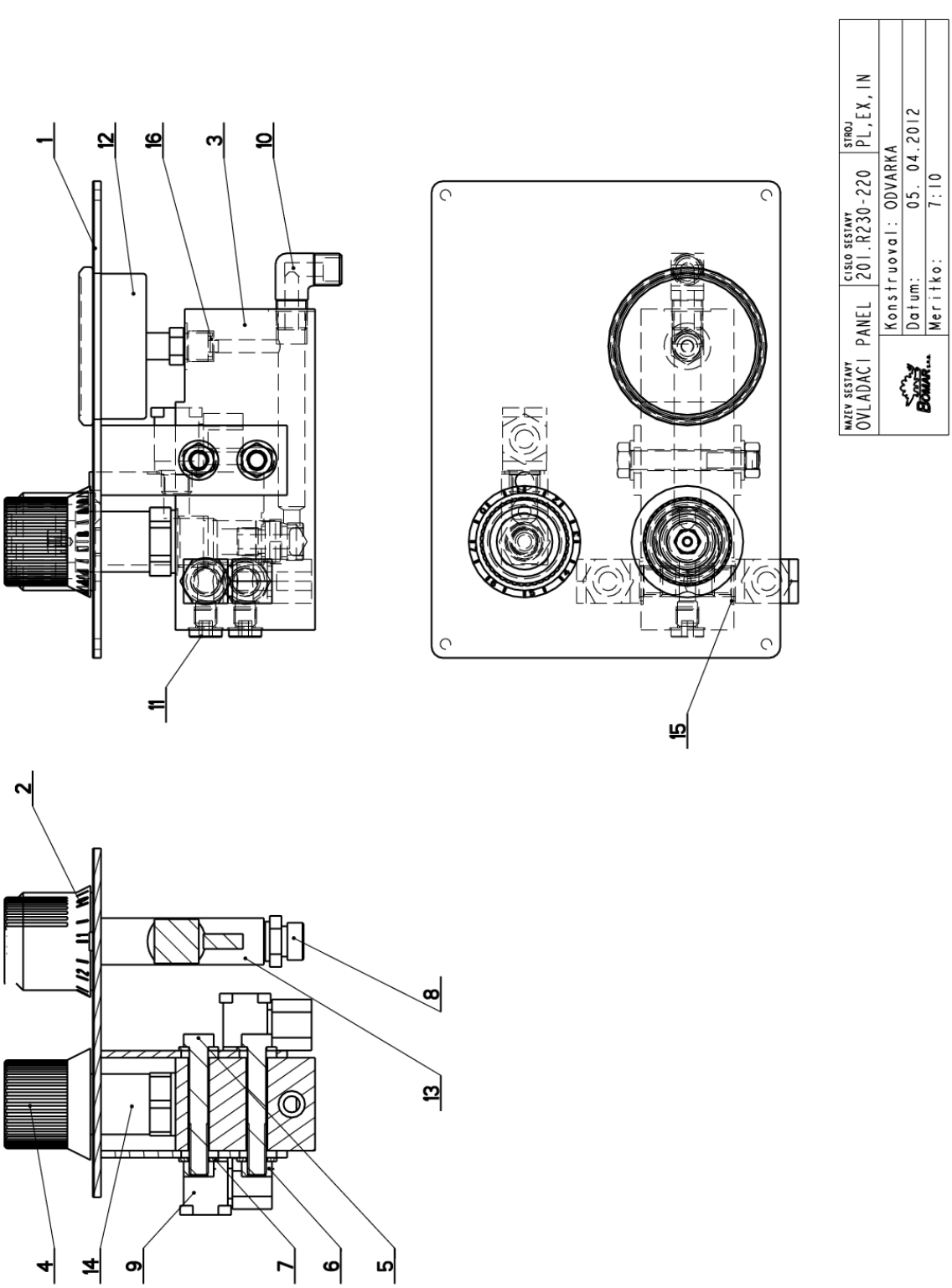

8.16. Kusovník / Piece list / Stückliste - Ovladací panel / Control panel / Bedienpult

Cislo Sestavy	Ver.	Nazev sestavy
201.R230-220	1	OVLADACI PANEL/CONTROL PANEL/BEDIENPULT

Poz.	Objednaci cislo	Ver.	Nazev polozky	Rozmer	Ks
1	251.652	0	PANEL / PANEL / PANEL		1
2	30.6130-018	0	HLAVICE / HEAD / KOPF	VYLISEK	1
3	30.6130-103	2	KOSTKA REGULACE / REGULATION CUBE / REGELUNGSWÜRFEL	TYC 60x40	1
4	31.6130-008	0	HLAVICE / HEAD / KOPF		1
5	90.005.55.064	0	SROUB 6HRANNY / 6 SIDED BOLT / SECHSKANTSCHRAUBE	SROUB M8X55	2
6	90.100.55.005	0	MATICE / NUT / MUTTER	MATICE _ M8	2
7	90.150.50.005	0	PODLOZKA / WASHER / UNTERLEGSCHEIBE	PODLOZKA 8,4	4
8	92.002.103	0	SROUBENI PRIME / DIRECT BOLTING / GERADE VERSCHRAUBUNG	G 1/4" tr12	1
9	92.003.001	0	SROUBENI UHLOVE / ANGLE BOLTING / WINKELVERSCHRAUBUNG	P-RSWS-08LR	3
10	92.004.001	0	SROUBENI UHLOVE / ANGLE BOLTING / WINKELVERSCHRAUBUNG	37701	1
11	92.019.003	0	ZATKA / PLUG / STOPFEN	G1/4" VNITRNI IMBUS	2
12	92.080.002	0	MANOMETR / MANOMETER / MANOMETER	d 63 - 60bar	1
13	92.152.001	0	VENTIL SKRTICI / CHOKE VALVE / DROSSELVENTIL	VS01-04/R 2.5-0	1
14	92.154.001	0	VENTIL REDUKCNI / REDUCTION VALVE / DRUCKMINDERUNGSVENTIL		1
15	96.082.002	0	TESNENI / SEALING / DICHTUNG	KROUZEK CU 13/17	4
16	96.082.005	0	KROUZEK TESNICI / SEAL RING / DICHTUNGSRING	5x8.8x1	2

Cislo Sestavy/Number of assembly/Nummer der Baugruppe; Verze (Ver.)/Version/Version; Nazev sestavy/Assembly title/Name der Baugruppe; Pozice (Poz.)/Position/Position; Objednaci cislo/Purchase order number/Bestellnummer; Nazev polozky/Volume title/Name der Position; Rozmer/Stock size/Abmessung

9. Výkresy sestav pro objednání náhradních dílů - volitelné příslušenství / Zeichnungen für Bestellung der Ersatzteile - optionale Zubehör / Drawing assemblies for spare parts order- optional accessories

- Při objednávání náhradních dílů vždy uvádějte: typ stroje (např. Individual 820.640 DGH) , výrobní číslo (např. 125) a rok výroby (např. 1999).

- In die Bestellung der Ersatzteile führen Sie immer an: Maschinentyp (z. B. Individual 820.640 DGH), Serien Nr. (z. B. 125) und Baujahr (z. B. 1999).

- For spare parts order, you must always to allege: type of machine (for example Individual 820.640 DGH), serial number (for example 125, see cover page) and year of construction (for example 1999).

9.1. Automat. nataceni ramene/ Automatische Rotation Arm/ Automatic arm rotation (Optional)

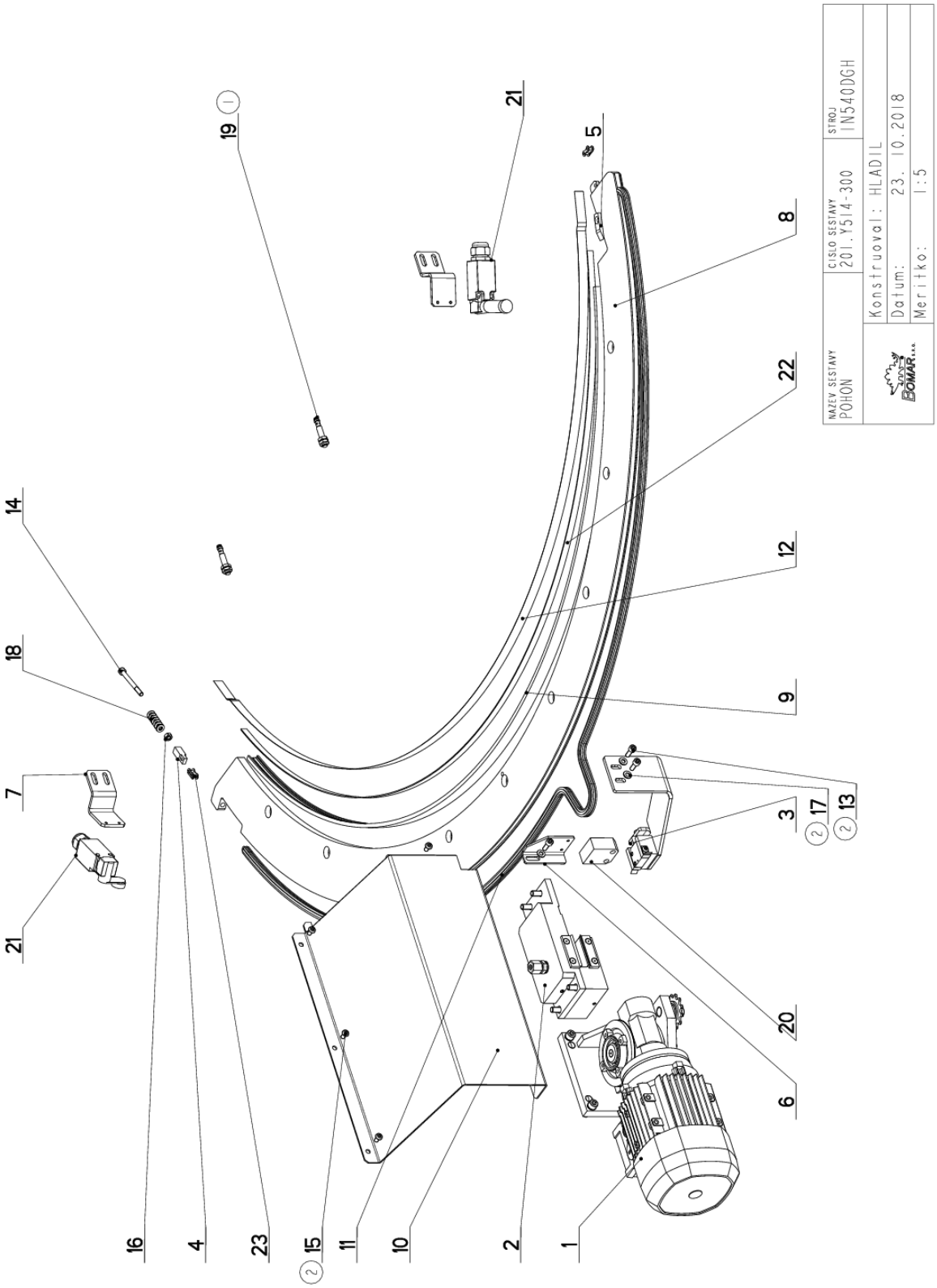

9.2. Kusovník / Piece list / Stückliste

Automat. nataceni ramene/ Automatische Rotation Arm/ Automatic arm rotation (Optional)

Cislo Sestavy	Ver.	Nazev sestavy
201.Y514-300	2	POHON/DRIVE /ANTRIEB

Poz.	Objednaci cislo	Ver.	Nazev polozky	Rozmer	Ks
1	201.V302-180	0	POHON / DRIVE / ANTRIEB		1
2	201.V307-250	1	BRZDA / BRAKE / BREMSE		1
3	201.V502-030	0	SNIMAC MAGNET. / MAGNETIC SENSOR / MAGNETSENSOR		1
4	30.V301-021	0	KOSTKA NAPINANI / TENSIONING CUBE / BANDSPANNUNGSWÜRFEL	HR 10x10	1
5	30.V301-127	0	DORAZ / STOP PIECE / ANSCHLAG	HR 12x5	1
6	30.V302-021	0	DRZAK / HOLDER / HALTER	P 3x59	1
7	30.V309-009	0	DRZAK / HOLDER / HALTER	P 4x40	2
8	30.V501-011	0	SEGMENT / SEGMENT / SEGMENT	P12x612	1
9	30.V501-114	0	PROFIL / PROFILE / PROFIL		1
10	30.V502-011	0	KRYT MOTORU / MOTOR COVER / MOTORABDECKUNG		1
11	49.200.042	0	RETIZEK / CHAIN / KETTE	081 171cl.	1
12	55.800.009	0	PLECH / PLATE / BLECH	P 0,3x15	1
13	90.001.25.017 (2)	0	SROUB IMBUS / ALLEN HEAD BOLT / IMBUSSCHRAUBE	M6X16	3
14	90.001.25.026	0	SROUB IMBUS / ALLEN HEAD BOLT / IMBUSSCHRAUBE	M6X65	1
15	90.013.27.007 (2)	0	SROUB PULKULATY / HALF ROUND BOLT / HALBRUNDSCHRAUBE	M6X10	4
16	90.100.55.004	0	MATICE / NUT / MUTTER	MATICE _ M6	1
17	90.150.50.004 (2)	0	PODLOZKA / WASHER / UNTERLEGSCHEIBE	PODLOZKA 6,4	3
18	90.350.02.001	0	TALIROVA PRUZINA / DISC SPRING / TELLERFEDER	12,5X6,2X0,5X0,85	10
19	91.172.033 (1)	0	SNIMAC / SENSOR / SENSOR	IME08-02BPSZT0S	2
20	91.173.016	0	SPINAC KONCOVY / END SWITCH / ENDSCHALTER	KONCAK	1
21	91.173.017	0	SPINAC KONC.S KLADK. / END SWITCH WITH PULLEY / ENDSCHALTER MIT ROLLE	FR 630	2
22	91.271.002	0	PASKA MAGNETICKA / MAGNETIC TAPE / MAGNETBAND	ELGO MB20.50	1
23	99.270.046	0	CLANEK SPOJ.-RETEZ / JOINT CUT ELEMENT / KETTENVERBINDUNGSGLIED	081	2

1.NAHRAZ. SNIMACE 91.172.009 ZA 91.172.033, ZM. 174/260 11.8.2017 MATEJEK
2.PRID. SROUBY 3x90.001.25.017 A 4x90.013.27.007, PRID. 3xPODLOZKA 90.150.50.004. 233/ZM383 23.10.2018 SZABARI

Cislo Sestavy/Number of assembly/Nummer der Baugruppe; Verze (Ver.)/Version/Version; Nazev sestavy/Assembly title/Name der Baugruppe; Pozice (Poz.)/Position/Position; Objednaci cislo/Purchase order number/Bestellnummer; Nazev polozky/Volume title/Name der Position; Rozmer/Stock size/Abmessung

9.2.1. Pohon/ Drive/ Antrieb (Optional)

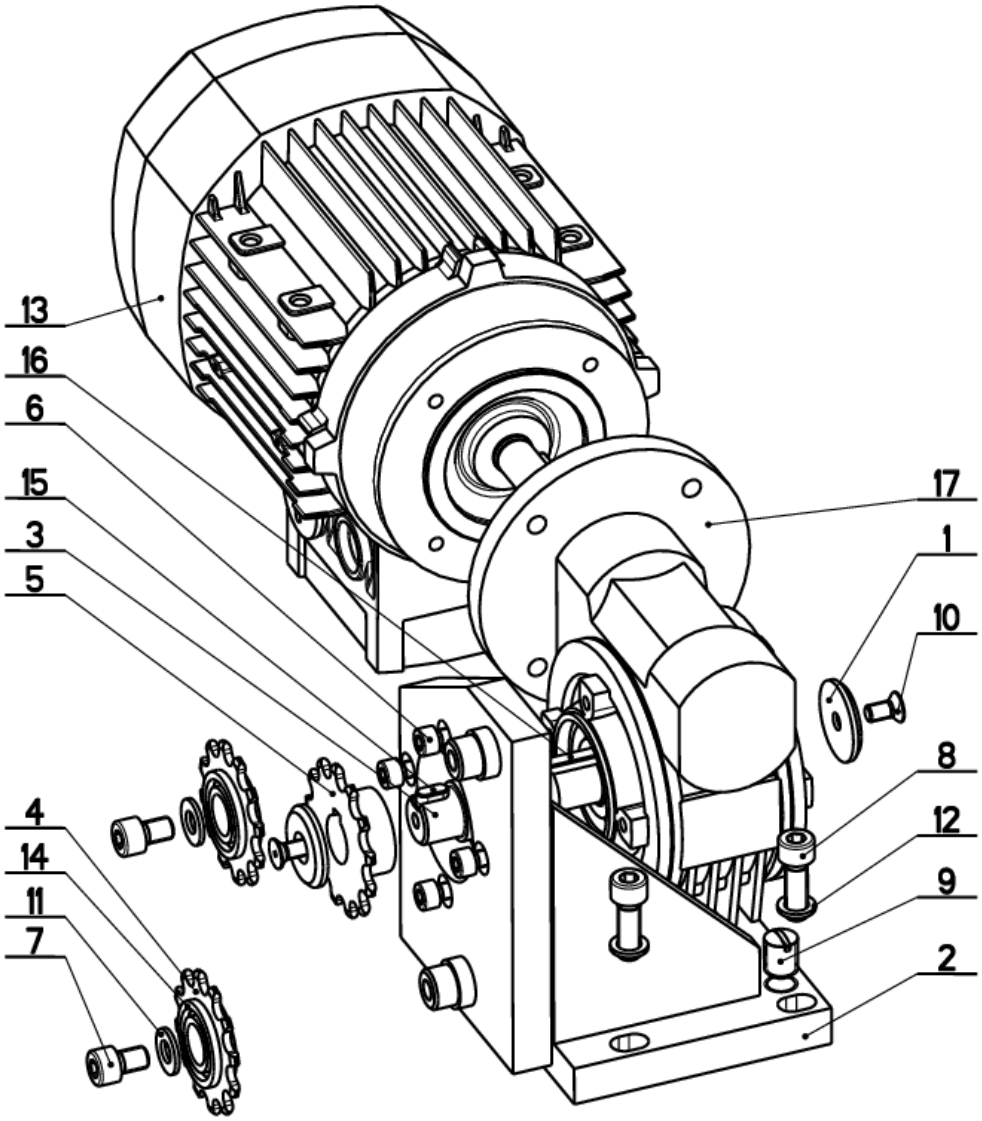

NAZEV SESTAVY	CISLO SESTAVY	STROJ
POHON	201.V302-180	IN360
	Konstruoval: MUSIL	
	Datum: 06. 12.2010	
	Meritko: 1:2	

9.2.2. Kusovník / Piece list / Stückliste
Pohon/ Drive/ Antrieb (Optional)

Cislo Sestavy	Ver.	Nazev sestavy
201.V302-180	0	POHON/DRIVE /ANTRIEB

Poz.	Objednaci cislo	Ver.	Nazev polozky	Rozmer	Ks
1	30.1514-503	0	PODLOZKA / WASHER / UNTERLEGSCHEIBE	d 30	2
2	30.V302-081	0	KONZOLA / CONSOLE / KONSOLE		1
3	30.V302-083	0	HRIDEL / SHAFT / WELLE	d 22	1
4	30.V302-085	0	KOLO RETEZOVE / CHAIN WHEEL / KETTENRAD	081-12z DISK	2
5	30.V302-086	0	KOLO RETEZOVE / CHAIN WHEEL / KETTENRAD	081-13z NABOJ	1
6	90.001.25.017	0	SROUB IMBUS CERNENY / ALLEN HEAD BOLT / IMBUSSCHRAUBE	M6X16	4
7	90.001.25.029	0	SROUB IMBUS / ALLEN HEAD BOLT / IMBUSSCHRAUBE	M8X12	2
8	90.001.25.033	0	SROUB IMBUS CERNENY / ALLEN HEAD BOLT / IMBUSSCHRAUBE	8x25	4
9	90.002.2D.017	0	SROUB STAVECI / ADJUSTMENT BOLT / STELLSCHRAUBE	SROUB M12X16	2
10	90.011.27.005	0	SROUB ZAPUSTNY / COUNTERSINK BOLT / SENKSCHRAUBE	SROUB M6X12	2
11	90.150.50.005	0	PODLOZKA / WASHER / UNTERLEGSCHEIBE	PODLOZKA 8,4	2
12	90.163.00.002	0	PODLOZKA / WASHER / UNTERLEGSCHEIBE	PODLOZKA 8	4
13	91.001.106	0	ELEKTROMOTOR / ELECTRIC MOTOR / ELEKTROMOTOR	0,37 kW	1
14	95.001.006	0	LOZISKO / BEARING / LAGER	6002 2RS	2
15	95.810.004	0	PERO TESNE / SPRING / FEDER	PERO 6X6X12	1
16	95.810.034	0	PERO TESNE / SPRING / FEDER	PERO 6X6X50	1
17	99.001.119	0	PREVODOVKA / TRANSMISSION / GETRIEBE	VF44 P1	1

Cislo Sestavy/Number of assembly/Nummer der Baugruppe; Verze (Ver.)/Version/Version; Nazev sestavy/Assembly title/Name der Baugruppe; Pozice (Poz.)/Position/Position;
Objednaci cislo/Purchase order number/Bestellnummer; Nazev polozky/Volume title/Name der Position; Rozmer/Stock size/Abmessung

9.2.3. Brzda/ Brake/ Brehmse (Optional)

Cislo Sestavy 201.V307-250 | Ver. 1 | Nazev sestavy BRZDA/BRAKE/BREMSE

Poz.	Objednaci cislo	Ver.	Nazev polozky	Rozmer	Ks
1	30.V307-251	1	DESKA / BOARD / PLATTE	HR 80x30	1
2	30.V307-252	1	CELIST POHYBLIVA / MOVING JAW / BEWEGLICHE BACKE	HR 80x40	1
3	30.V307-254	0	STERAC / WIPER / ABSTREIFER	BA18	4
4	30.V307-263 (1)	0	PIST / PISTON / KOLBEN	d 40	2
5	30.V307-265 (1)	0	CELIST / JAW / BACKE	d 32	2
6	90.001.25.036	0	SROUB IMBUS / ALLEN HEAD BOLT / IMBUSSCHRAUBE	M8X40	4
7	90.001.25.038	0	SROUB IMBUS / ALLEN HEAD BOLT / IMBUSSCHRAUBE	M8X50	2
8	90.002.20.003	0	SROUB STAVECI / ADJUSTMENT BOLT / STELLSCHRAUBE	SROUB M5X6	2
9	90.011.27.003	0	SROUB ZAPUSTNY / COUNTERSINK BOLT / SENKSCHRAUBE	SROUB M5X10	8
10	90.011.27.016	0	ZAPUSTNY IMBUS / COUNTERSINK BOLT / SENKSCHRAUBE	SROUB M8X25	2
11	92.002.101	0	SROUBENI PRIME / DIRECT BOLTING / GERADE VERSCHRAUBUNG		1
12	96.002.003	0	KROUZEK O DYNAMICKY / DYNAMIC O RING / O-RING DYNAMISCH	6X2	1
13	96.020.005	0	KROUZEK TESNICI / SEAL RING / DICHTUNGSRING	39.2X5.33	2
14	96.082.002	0	TESNENI / SEALING / DICHTUNG	KROUZEK CU 13/17	1

1.ZRUS.PIST 30.V307-253 A NAHR.30.V307-263,PRID.CELIST 30.V307-265. 029/ZM008 23.1.2015 SLEZACKOVA

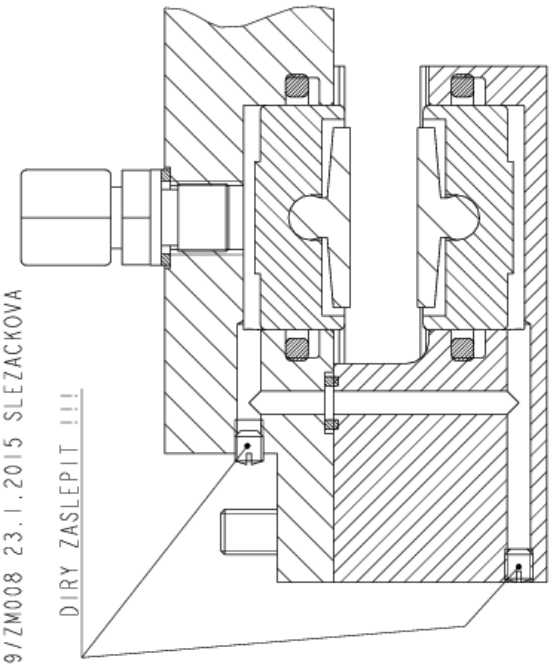

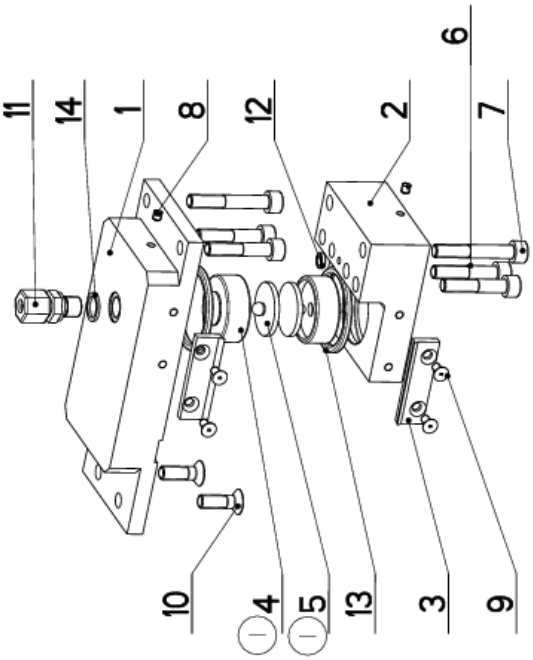

Cislo Sestavy/Number of assembly/Nummer der Baugruppe; Verze (Ver.)/Version/Version; Nazev sestavy/Assembly title/Name der Baugruppe; Pozice (Poz.)/Position/Position;
Objednaci cislo/Purchase order number/Bestellnummer; Nazev polozky/Volume title/Name der Position; Rozmer/Stock size/Abmessung

9.2.4. Snímač magnet./ magnetic sensor/ Magnetsensor (Optional)

Cislo Sestavy	Ver.	Nazev sestavy
201.V502-030	0	SNIMAC MAGNET./MAGNETIC SENSOR/MAGNETSENSOR

Poz.	Objednaci cislo	Ver.	Nazev polozky	Rozmer	Ks
1	30.1504-017	0	STERAC / WIPER / ABSTREIFER	P 0,3x11	2
2	30.V302-131	0	DRZAK / HOLDER / HALTER	HR 25x35	1
3	30.V302-133	0	PERO / SPRING / FEDER	HR 10x6	1
4	30.V502-031	0	DRZAK / HOLDER / HALTER	P5x120	1
5	31.1605-121	0	PRUZINA / SPRING / FEDER	1x9.5x12x4	1
6	90.001.25.004	0	SROUB IMBUS / ALLEN HEAD BOLT / IMBUSSCHRAUBE	M4X16	2
7	90.001.25.092	0	SROUB IMBUS / ALLEN HEAD BOLT / IMBUSSCHRAUBE	M6X14	1
8	90.013.27.002	0	SROUB PULKULATY / HALF ROUND BOLT / HALBRUNDSCHRAUBE	M5X6	2
9	90.150.50.002	0	PODLOZKA / WASHER / UNTERLEGSCHEIBE	PODLOZKA 4,3	2
10	92.270.018	0	SNIMAC MAGNET. / MAGNETIC SENSOR / MAGNETSENSOR	ELGO	1

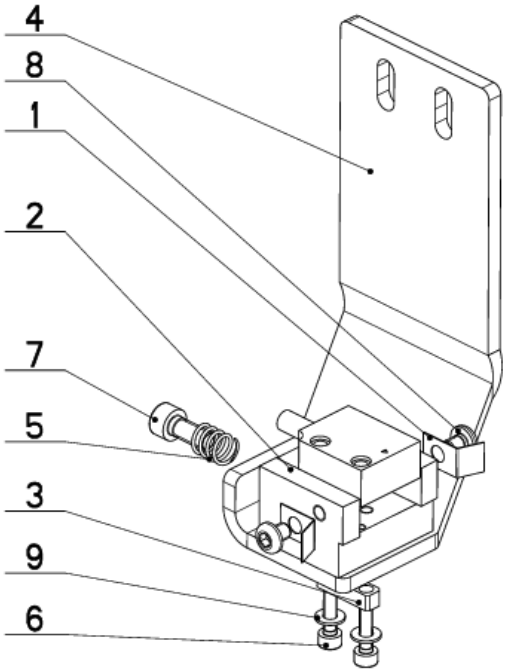

Cislo Sestavy/Number of assembly/Nummer der Baugruppe; Verze (Ver.)/Version/Version; Nazev sestavy/Assembly title/Name der Baugruppe; Pozice (Poz.)/Position/Position; Objednaci cislo/Purchase order number/Bestellnummer; Nazev polozky/Volume title/Name der Position; Rozmer/Stock size/Abmessung