Series **Proline**

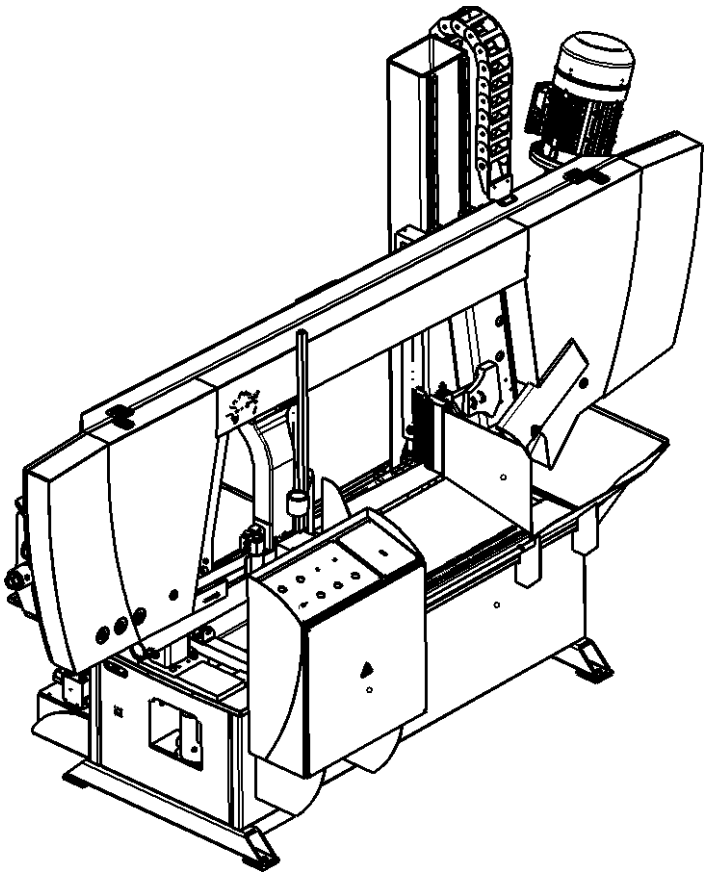

Proline 520.450 H/Hsx

Operating instructions

Before transporting and using the machine, please read the instructions thoroughly!

Sériové číslo / Serien Nummer / Serial Number _____

Service and information

Your BOMAR dealer:

Direct BOMAR contact:

BOMAR spol. s r.o.
Těžební 1236/1
62700 Brno
Czech Republic, EU

telefon: +420 – 533 426 100
fax: +420 – 533 426 109
e-mail: info@bomar.cz
www: http://www.bomar.cz

We are available:

Mondays to Fridays 7^{00} – 16^{00}

Version:

1.11 / Nov.2019

rev. 1

BOMAR, spol. s r.o. © – Subject to modifications and amendments.

EC Declaration of Conformity

1) We:

BOMAR, spol. s r.o.
Těžební 1236/1
627 00 Brno, Czech Republic
Id. No: 48908827
declare herewith

that the following designated device based on its conception and construction as well as the design launched by us meets the relevant basic safety requirements of the decrees of the government.This statement applies exclusively to the machine device in conditions in which it was brought to the market. It does not apply to parts subsequently added by the end user or to modifications performed subsequently by the end user. In the event of any device modification not approved by us this declaration shall lose its validity

Name:	**Band Saw**
Type :	**Proline 520.450 H/Hsx**
Serial number:	
Manufacturer	**BOMAR, spol. s r.o., Těžební 1236/1, 627 00 Brno**
Product data	
Determination:	for cross dividing and cutting of rolled and towed bars and profiles made of steel, stainless steel, non-ferrous metals and plastics
Description:	Stand, table, cutting unit with the arm, saw band and drive, hand clamping device, cooling system, machine control
	Pneumatic *NO* ☒ YES ☐ Hydraulic *NO* ☐ *YES* ☒ Control system *NO* ☐ *YES* ☒
Technical data:	Cutting rate 20–120 m.min-1
	Cutting angle 0°
	Total dimensions in mm (lxwxh) 2952X1242X2033
	Weight 1100 kg

Documentation:
Technical documentation for this machine device was elaborated in compliance with Government regulation no. 176/2008, Annex 7, part A.

The device meets relevant requirements of the given directives: **2006/42/ES**
2004/108/ES

The applied harmonized standards, National standards and technical specifications:

ČSN EN ISO 12100:2011	ČSN EN ISO 16093:2018	ČSN EN ISO 13857:2008
ČSN EN ISO 4413:2011		ČSN EN 60204 -1 ed.3:2019
ČSN EN 55011 ed.4+A1:2017	ČSN EN 61000-6-2 ed.3:2006	ČSN EN 61000-6-4 ed.2+A1:2011

The product is safe on condition of the common and determined usage.

The conformity judging was performed according to §12, par. 3, let. a), of the Law no. 22/1997 Coll. as amended.
The declaration of conformity was carried out in the cooperation with the TÜV SÜD Czech s.r.o, 2) , Novodvorská 994, 142 21 Prague 4 – Czech Republic, Identification number: 63987121 - Inspection body no. 4002.

The inspection certificate no **05.692.383** was issued

Brno, 22.11.2019

Point of issue, datum

BOMAR, spol. s r.o.
Těžební 1236/1, 627 00 Brno
Czech Republic
IČO: 48908827
DIČ: CZ48908827

Alfred P[illegible]ging
Director
Name and function of the responsible subject, signature

Person authorized to complete the technical documentation:: BOMAR, spol. s r. o., Těžební 1236/1, 627 00 Brno

1) Name, address and identification number of the subject issuing the conformity declaration (producer of importer)
2) The authorized or accredited body co-operating on the conformity judging

!	If the equipment is installed without safety equipment offered by BOMAR, spol. s ro or its agents and used by the customer (or buyer) then EC declaration loses validity. EC Declaration of conformity is valid only if customer (buyer) installed the BOMAR safety equipment with the machine or with some other with equivalent safety device in accordance with current applicable regulations and standards. All machine elements and components that were built into the device by BOMAR, spol. s ro have been declared "identical" to a safety device, as offered by BOMAR, spol. s ro or its agents.

Content

1. BEZPEČNOSTNÍ POKYNY/ SICHERHEITSHINWEISE/ SAFETY NOTES 9

1.1. Machine determination 11
1.2. Protective suit and personal safety 11
1.3. Safety notes for machine operator 12
1.4. Safety notes for the servicing and repairs 13
1.4.1. Safety notes for the servicing and repairs on hydraulic unit 13
1.5. Safety notes for the cooling 14
1.5.1. Instructions for first help 14
1.6. Safety notes for Swarf conveyor (optional accessories) 14
1.7. Safety machine accessories 14
1.7.1. Emergency Stop Switch 15
1.7.2. Arm covers 15
1.7.3. Band saw cover 15
1.7.4. Brush cover 16
1.8. Umístění štítku stroje / Maschinenschild position / Position of machine label 17
1.9. Umístění bezpečnostních značek / Verteilung der Sicherheitszeichen / Position of safety symbols 18

2. DOKUMENTACE STROJE / DOKUMENTATION DER MASCHINEN / MACHINE DOKUMENTATION 19

2.1. Technická data / Technische Daten / Technical data 21
2.2. Rozměrové schéma / Aufstellzeichnung / Installation diagram 23
2.3. Popis / Beschreibung / Description 24
2.4. Transportation and stocking 25
2.4.1. Conditions for transportation and stocking 25
2.4.2. Transport and stocking preparations 25
2.4.3. Transport and stocking 25
2.4.4. Transportní schéma / Transport schema / Transport 26
2.5. Activation 27
2.5.1. Machine working conditions 27
2.5.2. Band saw unpacking and assembling 27
2.5.3. Machine installing and levelling 27
2.5.4. First run of the power pack 28
2.5.5. Filling the reservoir with hydraulic oil 28
2.5.6. Kotevní plan / Verankerungsplan / Grounding plan 29
2.5.7. Electrical connection 30
2.5.8. Check machine connection into electrical network 30
2.5.9. Check the direction of the saw band 31
2.5.10. Filling of the cooling system 31
2.6. Check machine function 31
2.7. Machine disposal after lifetime 31
2.8. Saw band 32
2.8.1. Saw band size 32
2.8.2. Selection of the saw band tooth system 32
2.8.3. Saw band running-in 32
2.8.4. Tables for teeth selection 33

3. OVLÁDÁNÍ STROJE / BEDIENUNG DER MASCHINE / MACHINE CONTROL 35

3.1. Starting the band saw 37
3.2. Control panel 38
3.3. Machine control 39
3.4. Cycle breaking 40
3.5. Band saw adjusting 40
3.5.1. Cutting speed adjusting 40
3.5.2. Speed adjustment of the arm lowering 40
3.5.3. Adjustment of pressure to the cut 41
3.5.4. Saw frame upper position stop adjustment – lift arm adjustment 41
3.5.5. Saw frame lower position stop adjustment 42
3.5.6. Adjusting band guides 43
3.5.7. Brush adjustment 43
3.5.8. Setting of a cooling method 44
3.6. Material insertion 44
3.6.1. Handling agent selection 44
3.6.2. Insertion 44
3.6.3. Bundle material cutting 45
3.6.4. Hydraulic bundle camping device (optional accessories) 45

4. ÚDRŽBA STROJE / WARTUNG / MACHINE SERVICE 47

4.1. Saw band dismantling 49
4.2. Saw band installation 49

4.3. Saw band stretching and rupture inspection....50
4.3.1. Saw band stretching....51
4.3.2. Saw band run adjustment on stretching wheel....51
4.4. Cooling agents and chips disposal....52
4.4.1. Coolant device inspection....52
4.4.2. Chips disposal....53
4.4.3. Gun cleaning machines from chip (optional accessories)....53
4.5. Hydraulic, Greases and oils....55
4.5.1. Gearbox oils....55
4.5.2. Lubricant greases....55
4.5.3. Lubrication....56
4.5.4. Hydraulic oils....57
4.5.5. Hydraulic unit service....57
4.6. Machine cleaning....58
4.7. Worn pieces replacement....58
4.7.1. Hard metal guides replacement....58
4.7.2. Round brush replacement....59
4.7.3. Saw band guiding rollers replacement....59
4.7.4. Stretching wheel replacement....61
4.7.5. Driving wheel replacement....63
4.7.6. Cooling pump replacement....64

5. ZÁVADY / STÖRUNGEN / TROUBLESHOOTING....67

5.1. Mechanical problems....69
5.2. Electric and hydraulic problems....71
5.3. Hydraulic problems....72

6. SCHÉMATA / SCHEMAS / SCHEMES....73

6.1. Elektrické schema / Elektroschema / Electric scheme – Proline 520.450 H....75
6.1.1. 3×400 V + PE, 50 Hz....75
6.1.2. 3×230 V + PE, 50 Hz....99
6.2. Elektrické schema / Elektroschema / Electric scheme – Proline 520.450 Hsx....121
6.2.1. 3×400 V + PE, 50 Hz....121
6.2.2. 3×230 V + PE, 50 Hz....144
6.3. Hydraulické schéma / Hydraulikschema / Hydraulic scheme....166

7. VÝKRESY SESTAV PRO OBJEDNÁNÍ NÁHRADNÍCH DÍLŮ / ZEICHNUNGEN FÜR BESTELLUNG DER ERSATZTEILE / DRAWING ASSEMBLIES FOR SPARE PARTS ORDER – PROLINE 520.450 H.. 171

7.1. PROLINE 520.450 H....172
7.2. Kusovník / Piece list / Stückliste - PROLINE 520.450 H....173
7.3. Ovladací panel / Control panel / Bedienpult....174
7.4. Kusovník / Piece list / Stückliste - Ovladací panel / Control panel / Bedienpult....175
7.5. Ovladací panel / Control panel / Bedienpult....176
7.6. Kusovník / Piece list / Stückliste - Ovladací panel / Control panel / Bedienpult....177
7.7. Sloup / Pole / Säule....178
7.8. Kusovník / Piece list / Stückliste - Sloup / Pole / Säule....179
7.9. Sloup / Pole / Säule....180
7.10. Kusovník / Piece list / Stückliste - Sloup / Pole / Säule....181
7.11. Svěrák / Vice / Schraubstock....182
7.12. Kusovník / Piece list / Stückliste - Svěrák / Vice / Schraubstock....183
7.13. Skluz / Slide / Rutsch....185
7.14. Válec svěráku / Vice cylinder / Schraubstockzylinder....186
7.15. Kusovník / Piece list / Stückliste - Válec svěráku / Vice cylinder / Schraubstockzylinder187
7.16. Válec zvedací / Lifting cylinder / Hebezylinder....188
7.17. Kusovník / Piece list / Stückliste - Válec zvedací / Lifting cylinder / Hebezylinder....189
7.18. Podstavec / Base / Untersatz....190
7.19. Kusovník / Piece list / Stückliste - Podstavec / Base / Untersatz....191
7.20. Odměřování / Measuring / Gehrungsmessung....192
7.21. Kusovník / Piece list / Stückliste - Odměřování / Measuring / Gehrungsmessung....193
7.22. Odměřování / Measuring / Gehrungsmessung....195
7.23. Rameno / Saw arm / Sagerahmen....196
7.24. Kusovník / Piece list / Stückliste - Rameno / Saw arm / Sagerahmen....197
7.25. Rameno / Saw arm / Sagerahmen....198
7.26. Kusovník / Piece list / Stückliste - Rameno / Saw arm / Sagerahmen....199
7.27. Kartáč / Brush / Bürste....200
7.28. Kusovník / Piece list / Stückliste - Kartáč / Brush / Bürste....201
7.29. Kolečko / Wheel / Rolle....202
7.30. Konzola / Console / Konsole....203
7.31. Kryt / Cover / Abdeckung....204
7.32. Zámek / Lock / Schloss....205
7.33. Držák / Holde / Halter....206
7.34. Vedení pásu / Belt guide / Sägebandführung....208
7.35. Kusovník / Piece list / Stückliste - Vedení pásu / Belt guide / Sägebandführung....209
7.36. Kostka regulace / Regulation cube / Regelungswürfel....211
7.37. Kostka vodící / Lead cube / Führungsklotz....212
7.38. Kusovník / Piece list / Stückliste - Kostka vodící / Lead cube / Führungsklotz....213

7.39. Vedení / Guide / Backenführung....215
7.40. Kostka vodící / Lead cube / Führungsklotz....216
7.41. Kusovník / Piece list / Stückliste - Kostka vodící / Lead cube / Führungsklotz....217
7.42. Vedení / Guide / Backenführung....219
7.43. Pohon / Drive / Antrieb....220
7.44. Kusovník / Piece list / Stückliste - Pohon / Drive / Antrieb....221
7.45. Napínání / Tensioning / Spannung....222
7.46. Kusovník / Piece list / Stückliste - Napínání / Tensioning / Spannung....223
7.47. Válec / Roller / Zylinder....224
7.48. Kusovník / Piece list / Stückliste - Válec / Roller / Zylinder....225
7.49. Volitelné příslušenství....226
7.49.1. Horní upínání/ Top clamping/ obere Klemm....226
7.49.2. Kusovník / Piece list / Stückliste - Horní upínání/ Top clamping/ obere Klemm....227
7.49.3. Horní upínání/ Top clamping/ obere Klemm....228
7.49.4. Kusovník / Piece list / Stückliste - Horní upínání/ Top clamping/ obere Klemm....229
7.50. Horní upínání/ Top clamping/ obere Klemm....230
7.51. Kusovník / Piece list / Stückliste - Horní upínání/ Top clamping/ obere Klemm....231

8. VÝKRESY SESTAV PRO OBJEDNÁNÍ NÁHRADNÍCH DÍLŮ/ ZEICHNUNGEN FÜR BESTELLUNG DER ERSATZTEILE / DRAWING ASSEMBLIES FOR SPARE PARTS ORDER – PROLINE 520.450 HSX 233

8.1. PROLINE 520.450 Hsx....234
8.2. Kusovník / Piece list / Stückliste - PROLINE 520.450 Hsx....235
8.3. Rameno / Saw arm / Sagerahmen....236
8.4. Kusovník / Piece list / Stückliste - Rameno / Saw arm / Sagerahmen....237
8.5. Rameno / Saw arm / Sagerahmen....238
8.6. Kusovník / Piece list / Stückliste - Rameno / Saw arm / Sagerahmen....239
8.7. Kryt / Cover / Abdeckung....241
8.8. Pohon / Drive / Antrieb....242
8.9. Kusovník / Piece list / Stückliste - Pohon / Drive / Antrieb....243

1. Bezpečnostní pokyny/ Sicherheitshinweise/ Safety notes

The operating instructions must be read by the person, who keeps in touch with the machine before transportation, installation, using, servicing, reparation, stocking or removal!

The operating instructions include relevant information. The operator must familiarise himself with the install and operation, safety notes and machine servicing, because reliability and service life must be reached. The operating instructions must avoid risks, which are linked to work on the machine.

The machine operator must be familiar with the installation, operation and maintenance of machines and also with the safety instructions. Before transporting and using of the machine, please read the instructions thoroughly!

Attention!
The operating instructions must be available at the machine!
Keep the operating instructions in good condition!

1.1. Machine determination

The band saw **Proline 520.450 H/Hsx** is determined for cutting and shortening of rolled bars and drawn bars and profiles from steels, stainless steels, non-ferrous metals and plastics **without angle cutting**.

Combustible materials are excluded for cutting! Any other usage and operation outside this range are unauthorized and the manufacturer/supplier does not accept any responsibility for any damages resulting from such misuse. **The operator has full responsibility!**

The machine is equipped with safety and protective guarding for operator and machine protection. Nevertheless, this safety and protective guarding cannot prevent injury. Service personnel must read this chapter and comprehend it, before he starts to work on the machine. **Always keep instructions about work safety!** Service personnel must take into account other aspects of the risk, which refer to the ambient conditions and the material.

1.2. Protective suit and personal safety

Wear tight fitting overalls! Loose fitting clothes may be caught with machine parts and cause serious injury.

Wear protective gloves! Material cuts and saw band have sharp edges and may cause serious injuries.

Attention!
Gloves you can use only at working material replacement (saw band)! The machine and accessories must be inactive! If the machine is running, you must not wear gloves! It is dangerous, because some parts of the machine can catch gloves!

Wear protective shoes with non-skid soles! The unsuitable shoes may cause balance loss and following injury. Falling work pieces may cause serious injuries too.

Wear protective goggles! Chips and cooling liquid may damage your eyes.

Always wear ear protections! Most of the machines emit up to 80 dB and may damage your hearing.

Do not wear jewellery and always tie back long hair! Moving machine parts can catch jewellery or loose hair and may cause serious injuries.

Operate the machine only when you are fit enough to work. Illnesses or injuries diminish concentration.

Avoid machine work, which may compromise the safety of you and your colleagues!

Attention!
Consider the safety signs on the machine. Do not remove or damage them! Keep these labels still readable!

1.3. Safety notes for machine operator

Attention!
Machine can be operated by person older than 18 years!
Machine can be operated only person physically and mentally fit for this activity

Machine can be operated only by one person.

Machine operator is responsible for presence of other persons by the machine.

The person, which is controlling the machine using control equipments of the machine (control panel or another control equipment) mustn´t oneself or with help of another persons manipulate with the machine or with the cutted or another way processed material.

Keep instructions and orders about work safety!
Read the operating instructions, before you start to work on the machine! Keep the operating instructions in good condition!

Close covers before the machine starting and check, if the covers are not damaged. Damaged covers must be repaired or changed. Do not start the machine, if the cover is removed! Check, if the electric cables are not damaged.

Attention!
Do not connect the machine to electricity if the door or any covers are removed. Do not touch the high voltage electrical equipment (transformers, motors, terminals or wiring).

- Check that the power cables are not damaged.
- Do not hold the material for clamping to the vice and for cutting!
- Do not operate with the buttons and the switches on the control panel, when you have gloves!
- For machine starting take care, that there is nobody in the working area of the machine (it means in the working area of the vice, the saw band, the saw arm etc.).
- In no circumstances touch the rotating elements.
- Work on the machine only when the machine is in good condition!
- Check at least once in a shift, if the machine is not damaged. If the machine is damaged, you must bring the machine in order and you must inform your superior!
- Keep your working area clean!
- Ensure sufficient lighting in the working area.
- Take off the spilt water or the oil from the floor and dry it.
- Do not touch the cooling liquid with bare hands!
- Do not set the nozzle of the cooling liquid, when the machine is started on!

- Do not remove the chips from the working area of the machine, when the machine is started on!
- Do not use the compressed air for the machine cleaning or for the chips removing!
- Use the protective instruments for chips removal!

1.4. Safety notes for the servicing and repairs

Switch off the main switch and lock it, before you start service work! If you have the Practix type of machine, disconnect it from electrical network. This way you eliminate a possibility of starting the machine accidentally.

Take care when manipulating the frequency converter. It is still energized for 20 minutes after machine shutdown.

Always adhere to the safety instructions!

Only an authorized professional can carry out the servicing and repairs.

For parts replacement, use only those, which are identical with the originals. Otherwise, there is possibility of health hazard.

Use only recommended types of hydraulic oils, oils and lubricants!

Do not remove or lock the limit switches or any other safety equipment!

Attention!
Only a qualified professional can carry out the servicing and repairs of the electrical equipment! Take special care during the work with electrical equipment. High voltage shock can have fatal consequences! Always follow the work safety instructions! Otherwise, there is possibility of heavy injury!

Any use of the saw, accessories or machine parts other than that intended by BOMAR, spol. s r.o. company is not permitted. The guarantee on this product will be lost afterward and BOMAR, spol. s r.o. takes no responsibility for damage caused.

Do not turn the machine on if all covers are not in place

1.4.1. Safety notes for the servicing and repairs on hydraulic unit

Compliance with the the principles of cleanliness is basic requirement for trouble-free operation of hydraulic equipment. Hydraulic components are products made with high accuracy, and any contamination leads to a reduction lifetime or even malfunction. The consequences are very difficult to remove and expensive.

Always use clean tools. Parts and fasteners, which are part of a hydraulic circuit, never put away the dirty surface. The best cleaning agent is crepe paper, because the fibers of the cleaning cloths can also cause malfunction.

Protective cap from the threaded chamber remove just before the assembly of the unit.

Hoses and pipes before mounting flush with gasoline or other cleaning agent and blow compressed air.

All fittings must be properly tightened. However, do not raw power.

1.5. Safety notes for the cooling

Attention!
- *When handling cooling agents always wear hazardous fluid-proof gloves!*
- *Wear protective goggles!*
- *Cooling liquid can get in contact with your eyes and may cause permanent severe injuries*

1.5.1. Instructions for first help

Pull off and safely remove polluted, soaked clothing.

For breathing, go out in the fresh air or look for first aid treatment.

Wash with water or use crèmes for contact with the skin.

Flush with water for eyes and look for first aid treatment.

For swallowing, drink a lot of water and induce vomiting. Look for medical help

1.6. Safety notes for Swarf conveyor (optional accessories)

Swarf conveyor is an optional accessory of the machine, this article is valid just for the machine which is equipped with this device.

Attention!
It is forbidden to enter the swarf conveyor area if the saw is in operation. All maintenance and other works on the swarf conveyor could be done only on equipment which has been switched off.

For control of the swarf conveyor - see Chapter „Machine control".

.

1.7. Safety machine accessories

The machine is equipped with safety accessories. It protects the operator from injuries and the machine before damage. The safety accessories are blocking accessories, emergency switches and covers. Check once in a week the function of the safety accessories. If the safety accessories are functionless, you must stop work and repair or change the safety accessories.

Enhanced risk!
Do not come into or intervene in the cutting area. Otherwise, there is possibility of heavy injury.

1.7.1. Emergency Stop Switch

Emergency Stop Switch is used for emergency switching – off the machine in case defect or health hazard. By pressing **Emergency Stop Switch** will immediately stop all dangerous machine movements.

If any damages or fault appears, immediately press Emergency Stop Switch!

It is possible to release the pressed button by twisting of the upper part of the button.

The **Emergency Stop Switch** is placed at the control panel of the machine.

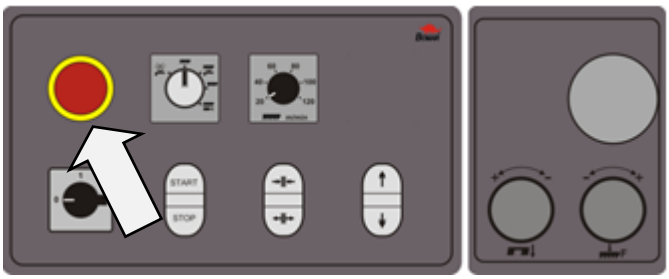

1.7.2. Arm covers

If the cover is opened during operation, the limit switch is opened and the band saw is stopped. The band saw is not possible to start in set mode.

The band saw is stated to the operation, when the covers is closed! Limit switched on saw arm control if cowers are open or not.

1.7.3. Band saw cover

It covers the visible area of the saw band from left guiding cube to the frame.

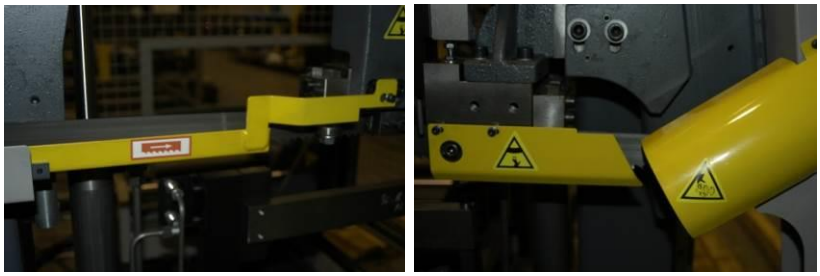

Never switch on the saw band driver if this cover is not mounted!

1.7.4. Brush cover

It covers the brush for saw blade.

Never switch on the saw band driver if this cover is not mounted!

1.8. Umístění štítku stroje / Maschinenschild position / Position of machine label

Machine label is placed on saw frame.

1.9. Umístění bezpečnostních značek / Verteilung der Sicherheitszeichen / Position of safety symbols

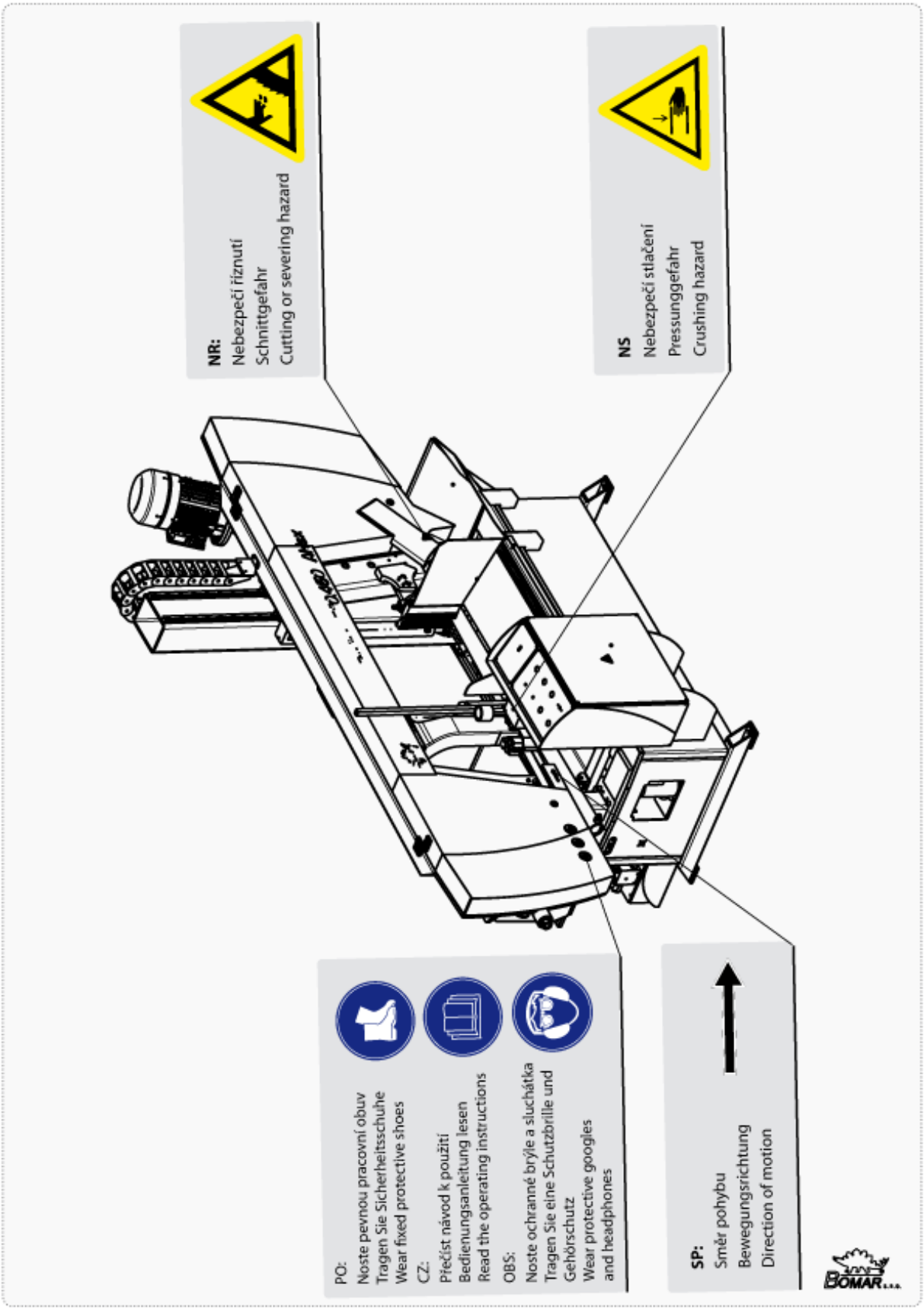

2. Dokumentace stroje / Dokumentation der Maschinen / Machine dokumentation

2.1. Technická data / Technische Daten / Technical data

Hmotnost stroje / Maschinengewicht / Machine weight:	
• Hmotnost / Gewicht / Weight	1100 kg
Rozměry stroje / Maschinengröße / Machine size :	
• Délka / Länge / Lenght	2952 mm
• Šířka / Breite / Width	1242 mm
• Výška / Höhe / Height	2033 mm
Elektrické vybavení / Elektrische Ausrüstung / Electical equipment - Proline 520.450 H:	
• Napájení / Versorgungsspannun / Supply voltage	~3 x 400 V, 50Hz, TN-C-S
• Příkon / Gesamptschlusswert / Total Input	6,2 kW
• Max.jištění / Max. Vorschaltsicherung / Max. Fuse	25 A
• Krytí / Schutzart / Protection	IP 54
Elektrické vybavení / Elektrische Ausrüstung / Electical equipment - Proline 520.450 Hsx:	
• Napájení / Versorgungsspannun / Supply voltage	~3 x 400 V, 50Hz, TN-C-S
• Příkon / Gesamptschlusswert / Total Input	10,4 kW
• Max.jištění / Max. Vorschaltsicherung / Max. Fuse	25 A
Krytí / Schutzart / Protection	IP 54
Akustický tlak / Schalldruckpegel / Acoustic pressure:	
• Proline 520.450 H/Hsx	L_{Aeqv}=76,3 dB
Pohon / Atrieb / Drive - Proline 520.450 H:	
• Typ / Typ / Type	1LA7113-4AA11 IE2
• Napájení / Versorgungsspannun / Supply voltage	~230/400V, 50Hz
• Výkon / Leistung / Output	4 kW
• Jmenovité otáčky / Motornenndrehzahl / Nominal speed	1440 min^{-1}
Pohon / Atrieb / Drive - Proline 520.450 Hsx:	
• Typ / Typ / Type	1LE1001-1CB22-2FA4-ZD31 D40 IE2
• Napájení / Versorgungsspannun / Supply voltage	~230/400V, 50Hz
• Výkon / Leistung / Output	7,5 kW
• Jmenovité otáčky / Motornenndrehzahl / Nominal speed	1440 min^{-1}
Hydraulické zařízení / Hydraulikeinrichtung / Hydraulic equipment:	
• Typ / Typ / Type	PM-AC0,48(0,6 kW/300/1500-P61/2,5-TM20-CB03-FRS001_137_1
• Výkon / Leistung / Output	(92.001.077) 3 kW
Chladící zařízení / Kühlmiteleinrichtung / Cooling equipment:	
• Typ / Typ / Type	2COP1-12H1-4
• Obsah nádrže / Volumen vom Kühlmittel / Capacity	45 l
Rozměr pásu / Sägebanddimension / Band size:	
6020×41×1,3 mm	
Max. hmotnost podávaného materiálu / Materialmaximalgewicht / Material max. weight:	
3460 kg	
Řezná rychlost / Schnittgeschwindigkeit / Cutting speed:	
20–120 m/min.	

Řezné rozsahy / Schnittbereiche / Cutting size:

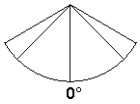			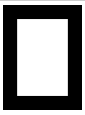	
0°	Ø450 mm	520×450 mm	520×450 mm	450×450 mm

Warning:

If the material detection device is installed on the machine then maximal workpiece height is 10 mm shorter.

If machine has bundle device then material maximal height is half.

Level of acoustic pressure:

Equivalent level of acoustic pressure A (noise) at operator position are L_{Aeqv}=76,3 dB. Mentioned values are levels of emission which doesn't have to represent safe levels. Factors which influence real level of acoustic pressure on machine operator are: working place characteristics, cut material, saw band. These factors have significantly influence on acoustic pressure.

2.2. Rozměrové schéma / Aufstellzeichnung / Installation diagram

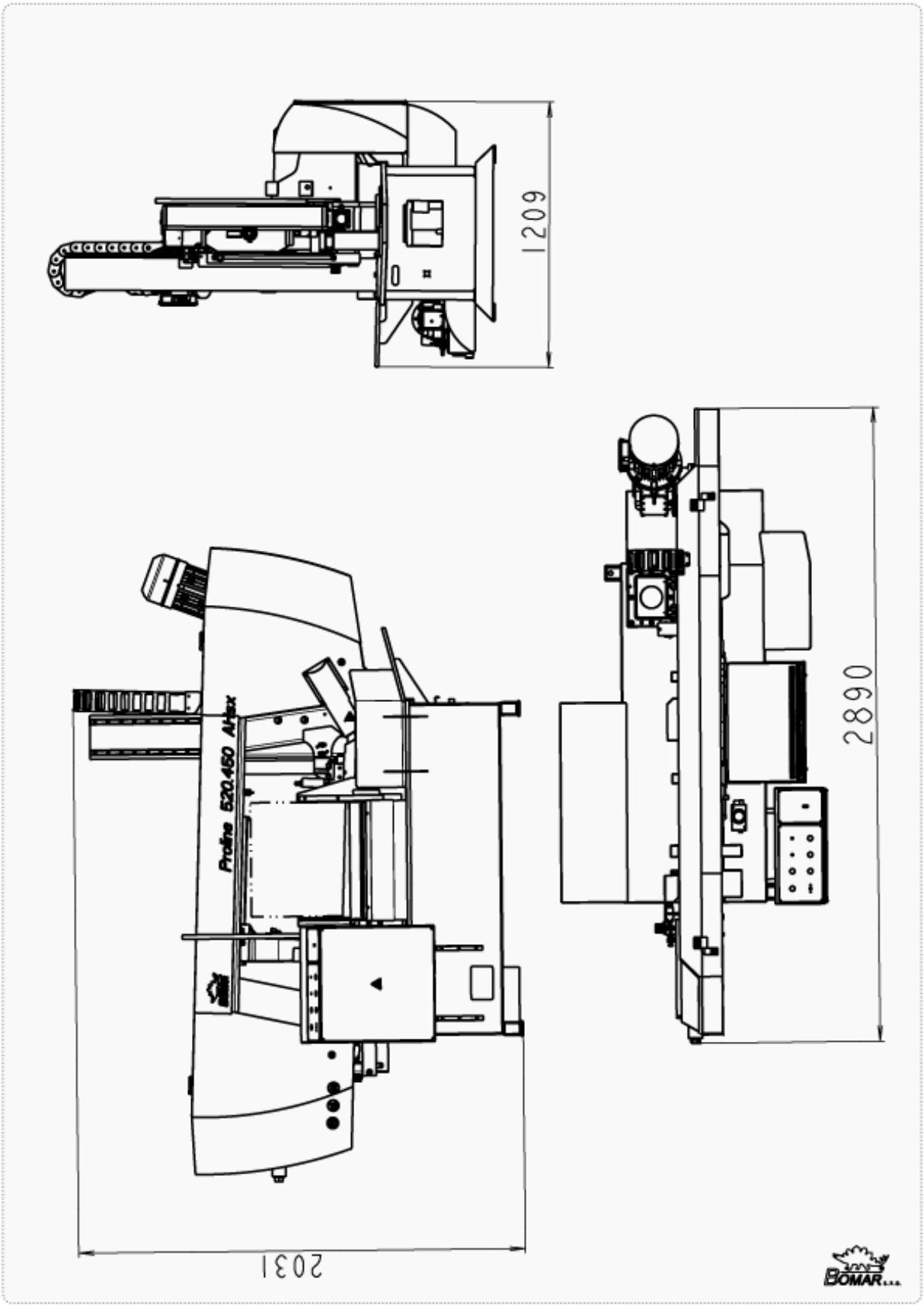

2.3. Popis / Beschreibung / Description

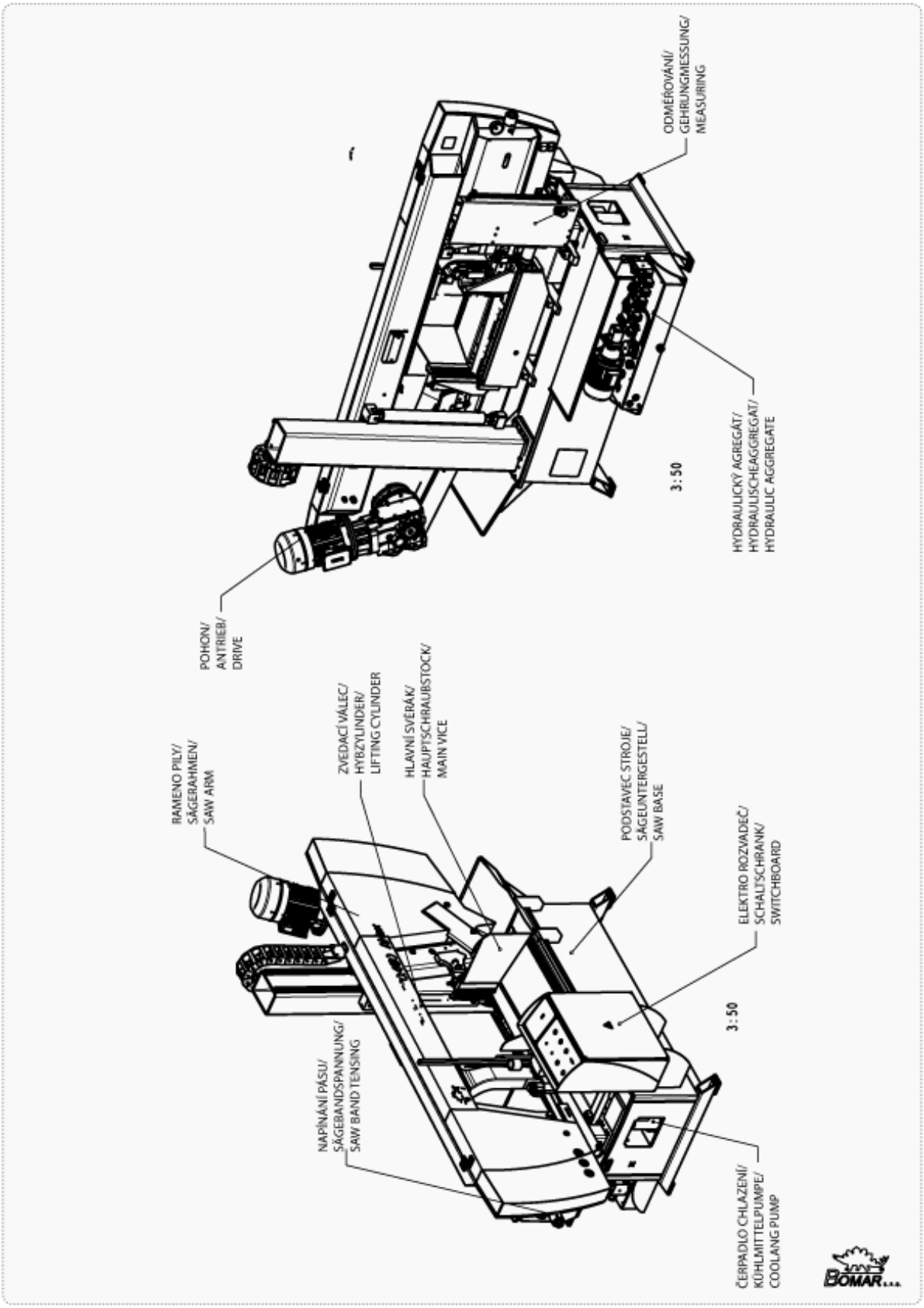

2.4. Transportation and stocking

2.4.1. Conditions for transportation and stocking

Keep recommendations for the manufacturers for transportation and stocking! If the recommendations are not kept, damage can occur to the machine.

- Don't use a forklift truck for handling the machine, if you do not have license for it!
- Don't move under suspended loads! Fault in lifting device may cause serious injury.
- Keep a safe distance from the machine during the transport.
- Temperature of the air from *-25°C to 55°C*, for a *short term* (max. 24 hours) temperature of the air until *70°C*
- Do not expose the machine to radiation (for example microwave radiation, ultraviolet radiation, laser radiation, x-ray radiation). Radiation can cause problems with the machine function and deteriorating condition of the isolation.
- Take measures, to prevent damage by dampness, by vibrations and by shakes.

2.4.2. Transport and stocking preparations

Close the vice and thoroughly oil all blank surfaces.

Lower the saw frame to the lowest position.

Make sure to empty the machine of all traces of the cooling agent.

Fasten all loose parts securely to the machine.

Pack and wrap the control desk securely to avoid damage during transport.

Fix the stickers stating the minimum approximate machine weight to at least five well visible places.

2.4.3. Transport and stocking

The machine must be secured during transportation. Screw on the palette to the floor of the van or the trailer. Be careful that the machine is not damaged during transportation. Store the machine only under conditions mentioned in the manual, to avoid damage of the machine.

It is forbidden to handle the machine any other way, than it is written in this operating instructions, the machine can be damaged.

2.4.4. Transportní schéma / Transport schema / Transport

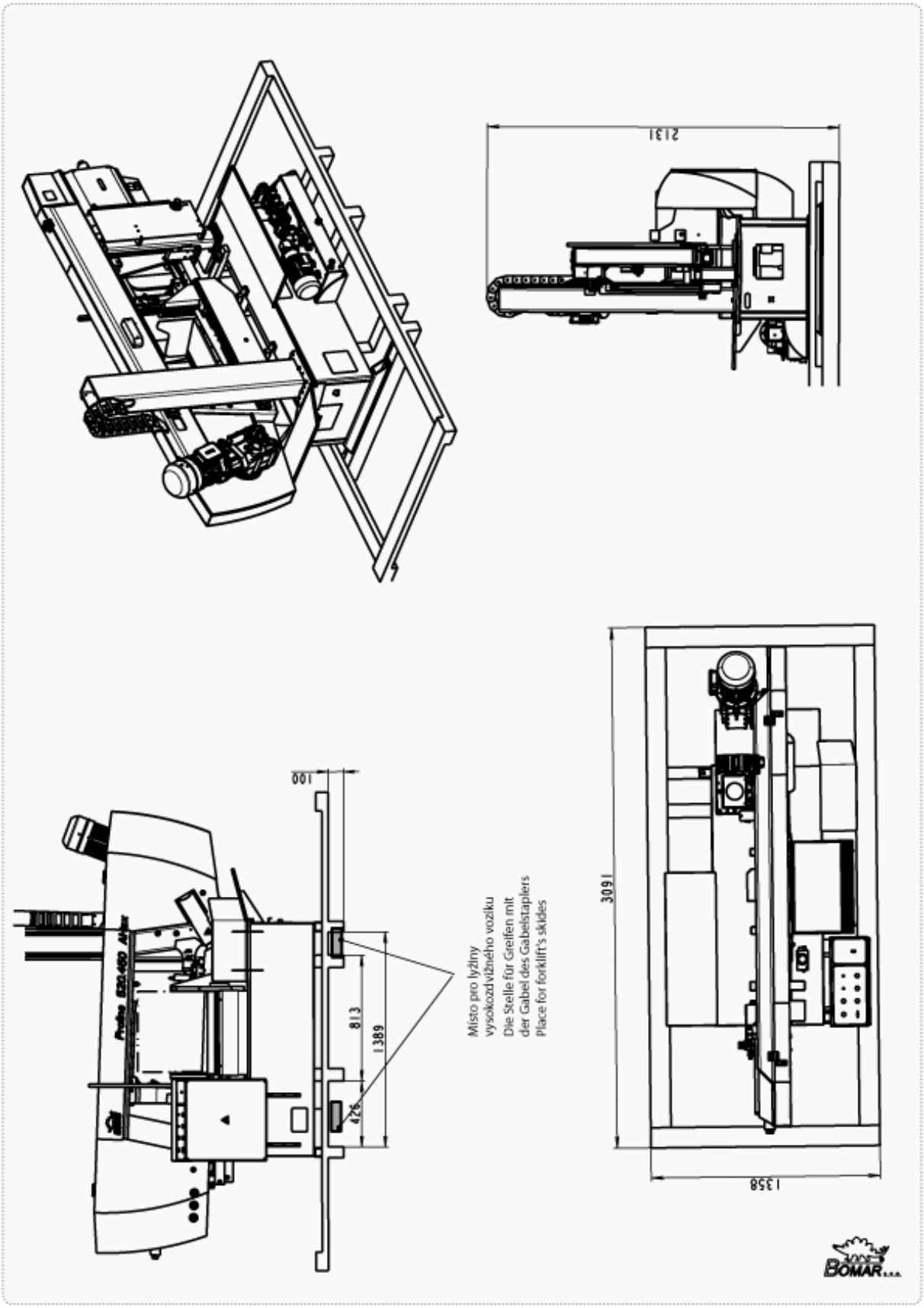

2.5. Activation

2.5.1. Machine working conditions

Keep the conditions of the manufacturer for machine operating! If recommendations are not kept, damage can occur to the machine.

The manufacturer warrants the correct function of the machine for these conditions:

- At temperature air from ***10°C to 40°C***, the temperature average during 24 hours must ***not exceed over 35°C***.
- At relative dampness of the air in the extend from 30% to 95% (not concentrate). Altitude lower than 1000 metres.
- Do not expose the machine to the radiation (for example microwave radiation, ultra-violet radiation, laser radiation, x-ray radiation). Radiation can cause problems with the machine function and deteriorating condition of the isolation.

Attention!
If the ambient temperature drops below 15 °C is required before operating the machine to have switch on hydraulic unit around 10 minutes and then made several motion few times (for example, in manual mode) by all hydraulic cylinders. The reason is to heat hydraulic oil to the operating temperature for proper function of the pressure switches (and choke).

2.5.2. Band saw unpacking and assembling

Remove the packing from the machine and unpack all parts.

Attention!
Switch off the main switch and lock it, before you start assembly! Otherwise, there is possibility of hazardous machine starting.

If the hydraulic unit is outside the machine (the machine only connected hoses and cables), it needs to be placed and mounted on a solid basis (floors, etc.). The mounting holes are used on the bottom (bases) of the tank.

2.5.3. Machine installing and levelling

Check the floor supporting capacity before machine installing. If the floor capacity does not agree with requirements, you must prepare the necessary base for the machine.

Minimal requirement:

machine weight – Proline 520.450 H**/Hsx –** 1100 kg

+ weight of accessories

+ maximum weight of material

- The machine must be levelled at the horizontal position. All feet of the machine must touch with the floor after levelling
- The machine must be levelled by means of the calibrated spirit level. Spirit level is put on the vice area. Set the roller conveyors according to the spirit level.
- For machine levelling, take care that there is sufficient available space for operation, repair work, servicing of the machine and handling the material..
- The machine including appended parts and accessories must be visible from the place of operation.

2.5.4. First run of the power pack

Before the first run check:

- The direction of the Pump, while run the power pack for max. 2seconds.
- The cooling fan of the motor has to rotate in the same direction as the arrow on the top of the motor cowling indicates.
- In case of wrong rotational direction, the electrical phase in the connection box is to be changed. This check is required after every disconnection from the power source
- Wiring matches with electrical and hydraulic diagrams
- the electric motors (pump and cooler) are properly connected and have the prescribed rotation
- the hydraulic accumulator with nitrogen gas to the specified value
- aux. elements work right (thermometer, level gauge, heater)

First run (Attention – working pressure on securing valve is set by producer in accoring the hydraulic diagram):

- In the short intervals activate an electric pump
- check for leaks and noise
- Bleed the hydraulic circuit
- if possible, test the circuit function with minimum load
- test the electrical equipment
- during operation monitor measuring equipment, noise, height and temperature of oil in the tank
- During this time a careful bleeding off for the whole hydraulic system is necessary. In case there is no bleeder port, the power pack will bleed itself after a while via the air breather on the tank or the return line filter.
- After multiple start-up.

2.5.5. Filling the reservoir with hydraulic oil

Oil regulations and recommendations of the manufacturer in the technical documentation (appendix) are to be carefully observed. For standard power packs we recommend the oiltype OH-HM32 (DIN 51524) of all known oil manufacturers.

Power packs have to be filled up with clean, pre-filtered oil! The purity of the hydraulic fluid must correspond to the class 10 NAS 1638 (reachable with filter ß =75)!

Filling from container, such as barrels, backets, etc. is not recommended or permitted!

The maximum oil level will be shown on the upper marking at the dipstick or the sight level glass. Overfilling has to be prevent. The maximum filling rate of 15 l/min shouldn´t be exceed.

Oil type	Kinematic viscosity v in mm^2/s in relationship to the fluid temperatur					Freezing point
	0°C	20°C	40°C	60°C	80°C	°C
OH-HM 32	220	100	32	15	7	-40
OH-HV 32	180	67	32	17	11	-40

2.5.6. Kotevní plan / Verankerungsplan / Grounding plan

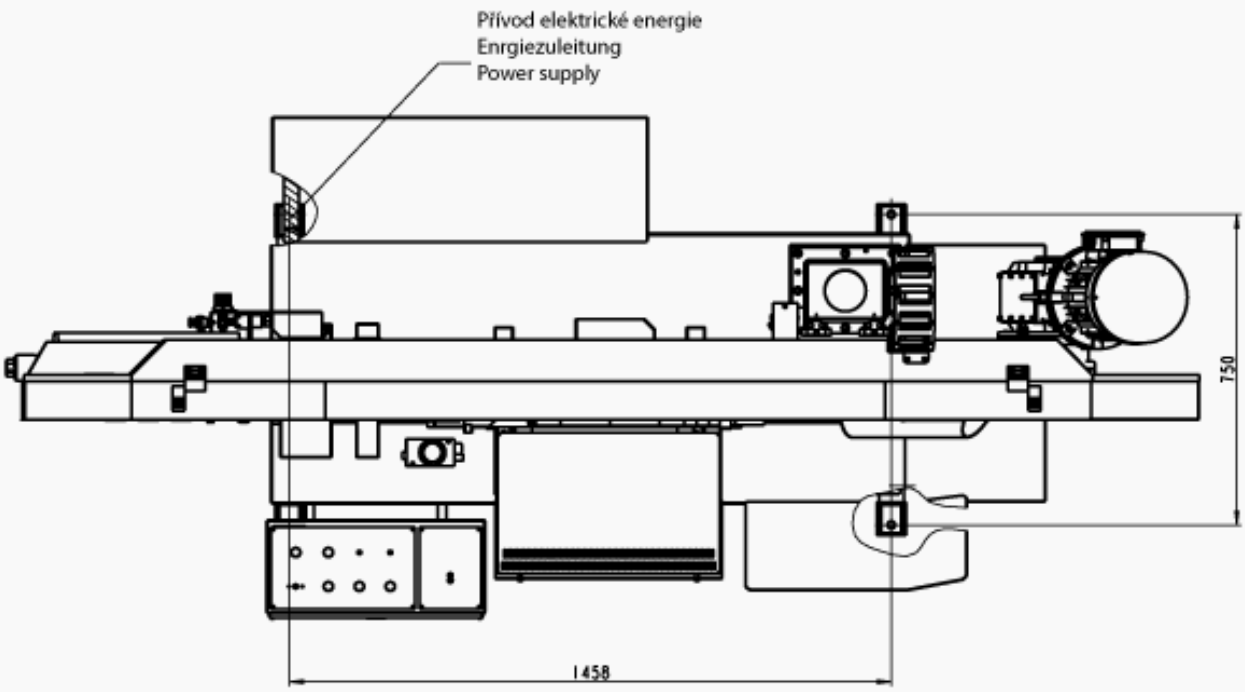

Kotvící materiál / Verankerungsmaterial / Grouding material

- 6x Hmoždina / Dübel / Plug – ø12 mm
- Vrtáno do hloubky / In die Tiefe gebohrt / Drilled to – 95 mm
- Šrouby / Schraube / Screws – M16 x 135 mm

Šrouby podložit deskami o min. rozměrech P10x100-100
- Die Schrauben mit Platten mit Minimaldimensionen P10x100-100 unterlegen
Screew must be bottomed with plates (min. dimensions P10x100-100)

Požadavky na rovinnost podlahy / Anforderungen an die Bodenebenheit / Requirements for floor flatness

± 10 mm / 1 m

2.5.7. Electrical connection

Attention!
Only a qualified professional must carry out the servicing and repairs of the electric equipment! Take special care during work with electrical equipment. High voltage shock can have fatal consequences! Always keep notes about work safety.

Electrical parameters of the machine: see **Technical data**

Before connecting switch off the main switch of the power supply circuit for the machine and ensure dry place when doing connecting works!

Service voltage must agree with the line voltage! Crosscut of the supply line must respond with rated current for max. machine load

Note:
The values of the crosscut of the conductor and the rated current are in the norms

.

Note:
The socket with the fork can be used only at the machines with the rated current less than 16 A and total input less than 3 kVA.

Supply is equiped with a nend part 16 A for connection to power source.

In case the machine is connected with a direct connection, an extra main switch must be added which can be locked in zero position.

Attention!
In this case the extra main switch becomes primary and the main switch on the machine has only secondary function.

2.5.8. Check machine connection into electrical network

Attention!
When you connect the machine to the electrical network observe correct connection of all phases!
ENGINE IN IN HYDRAULIC AGGREGATE CANNOT BE OPERATED WITH REVERSE TURNING MORE THEN 10 SECONDS!!!

2.5.9. Check the direction of the saw band

After the machine has been successfully connected, briefly switch on the machine and put the driving engine of the band in the running position. The direction must be in accordance with the arrow direction on the saw band cover. In case the direction of the saw band does not match, two phases at the terminal strip must be switched.

2.5.10. Filling of the cooling system

Prepare the mixture of the water and the cooling liquid. Keep the concentration specified by manufacturer. Shift away the cover from the drainage hole. Fill the mixture of the water and the cooling liquid to the tank of the cooling system. Area of the tank for the cooling liquid is discovered from the chapter *Technical data*.

Let the drainage hole opened and with the sieve during operation, because it secures the right work of the cooling system. Filling the tank with the cooling liquid, take care that the liquid does not drip out of the tank and the tank does not overflowed.

> ***Note:***
> *If machine is equipped with Microniser, fill Microniser with prescribed cooling liquid. This made the Microniser ready for use.*

2.6. Check machine function

Check, if the machine or some parts of the machine were not damaged during transport.

Check, if covers are installed and functional. Check by means of the Tenzomat if the saw band is correctly stretched. If it is necessary, you can stretch the saw band according to chapter *Selection and replacement of the saw band*. Values of the saw band stretching are on the Tenzomat. Switch on the main switch and check the motors and systems (saw band drive, hydraulic pump, cooling pump, chips conveyor).

Open and close the main vice. Turn the saw frame of the band saw from one outer position to other outer position. Raise the saw frame to the top position and drop the saw frame to the lowest position.

Start the machine with the cooling pump and let it run without load until the cooling system will be filled with cooling liquid. As soon as the cooling liquid starts to escape from the nozzles of the cooling system, the cooling system is ready for the operation. Carry one cycle of cutting without material. Check, if the machine runs with no irregularities. If all machine functions are right, the machine is ready for operation..

2.7. Machine disposal after lifetime

Blown out all service fluids (cooling liquid, hydraulic oil) into designated reservoir. Dismantle machine into separate parts and dispose them in accordance with valid directives.

Packaging material Also dispose in accordance with valid directives.

Packaging and machine parts that contain secondary raw materials can be recycled.

2.8. Saw band

Refit the saw band cover only after you have installed and tightened the saw band.

2.8.1. Saw band size

6020×41×1,3 mm

2.8.2. Selection of the saw band tooth system

The manufacturers provide the saw bands with constant and variable tooth system. The important factor for selection of the tooth system is length of the cutting canal with respect to the size of the product

1. *Constant tooth system* – the saw band has parallel tooth pitch all over length. This way is suitable for cutting of solid material.

BOMAR recommended Variable tooth system for band saw.

2. *Variable tooth system* – tooth pitch is variable. Variable tooth system is used for profiled materials and bundle cutting. Variable tooth pitch lowers vibration of the saw band, increases service life of the saw band and quality of the cutting area.

In tables, there are advised type of the tooth system depending on sizes and form of the cutting material.

Footnotes:

Z_pZ – teeth number on one inch S – tooth with zero angle of the teeth K – tooth with positive angle of the teeth

Examples of the tooth system marking:
32 S – number „32" means 32 teeth on one inch (that means constant tooth system), letter „S" marks teeth with zero angle of the tooth.

4–6 K – number „4–6" means 4 till 6 teeth on one inch
(that means variable tooth system); letter „K" marks teeth with positive angle of the teeth.

2.8.3. Saw band running-in

Running-in: Cut the material with the frame lowering reduced to 50% only. When vibrations occur increase or decrease the band speed.

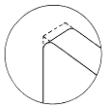

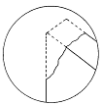

When cutting small pieces run the band until approximately 300 cm^2 of material has been cut. When cutting large pieces run the band for 15 minutes approximately. When the band has been run, increase the lowering-speed to normal speed. The running in of the saw band avoids micro-breaks on the cutting edges of new saw band ensuing from first excessive stress. This would decrease service life substantially. The optimal running in of the saw band produces ideal rounded cutting edges and therefore the conditions for an optimal service life.

Note: *Run regrinding saw bands too.*

2.8.4. Tables for teeth selection

PROFILOVÝ MATERIÁL (D_p, S = mm)

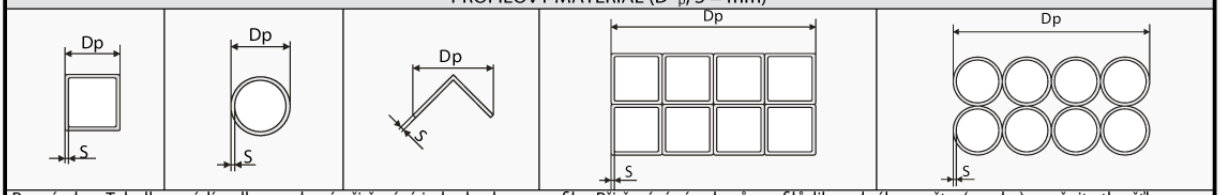

Poznámka: Tabulka uvádí volbu ozubení při řezání jednoho kusu profilu. Při řezání více kusů profilů libovolného počtu (svazku) uvažujte tloušťku stěny jako dvojnásobek tloušťky stěny jednoho profilu (tzn., že tloušťka „S" rovná se 2×S). V tabulce je uvedeno ozubení jak konstantní, tak variabilní.

Tloušťka stěny S [mm]	Ozubení (Z_pZ) Vnější průměr profilu D_p [mm]					
	20	40	60	80	100	120
2	32 S	24 S	18 S	18 S	14 S	14 S
3	24 S	18 S	14 S	14 S	10–14 S	10–14 S
4	24 S	14 S	10–14 S	10–14 S	8–12 S	8–12 S
5	18 S	10–14 S	10–14 S	8–12 S	6–10 S	6–10 S
6	18 S	10–14 S	8–12 S	8–12 S	6–10 S	6–10 S
8	14 S	8–12 S	6–10 S	6–10 S	5–8 S	5–8 S
10	-	6–10 S	6–10 S	5-8 S	5–8 S	5–8 S
12	-	6–10 S	5–8 S	5–8 S	4–6 K	4–6 K
15	-	5–8 S	5–8 S	4–6 K	4–6 K	4–6 K
20	-	-	4–6 K	4–6 K	4–6 K	3–4 K
30	-	-	-	3–4 K	3–4 K	3–4 K
50	-	-	-	-	-	3–4 K

Tloušťka stěny S [mm]	Ozubení (Z_pZ) Vnější průměr profilu D_p [mm]					
	150	200	300	500	750	1000
2	10–14 S	10–14 S	8–12 S	6–10 S	5–8 S	5–8 S
3	8–12 S	8–12 S	6–10 S	5–8 S	4–6 K	4–6 K
4	6–10 S	6–10 S	5–8 S	4–6 K	4–6 K	4–6 K
5	6–10 S	5–8 S	4–6 K	4–6 K	4–6 K	3–4 K
6	5–8 S	5–8 S	4–6 K	4–6 K	3–4 K	3–4 K
8	5–8 S	4–6 K	4–6 K	3–4 K	3–4 K	3–4 K
10	4–6 K	4–6 K	4–6 K	3–4 K	3–4 K	2–3 K
12	4–6 K	4–6 K	3–4 K	3–4 K	2–3 K	2–3 K
15	4–6 K	3–4 K	3–4 K	2–3 K	2–3 K	2–3 K
20	3–4 K	3–4 K	2–3 K	2–3 K	2–3 K	2–3 K
30	3–4 K	2–3 K	2–3 K	2–3 K	1,4–2 K	1,4–2 K
50	2–3 K	2–3 K	2–3 K	1,4–2 K	1,4–2 K	1,4–2 K
75	-	2–3 K	1,4–2 K	1,4–2K	1,4–2 K	0,75–1,25 K
100	-	-	1,4–2 K	0,75–1,25 K	0,75–1,25 K	0,75–1,25 K
150	-	-	-	0,75–1,25 K	0,75–1,25 K	0,75–1,25 K
200	-	-	-	0,75–1,25 K	0,75–1,25 K	0,75–1,25 K

PEVNÝ MATERIÁL (D = mm)

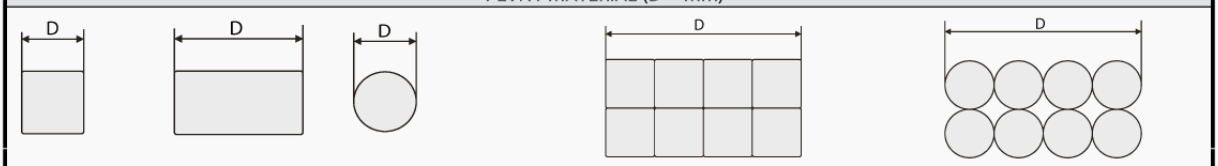

Konstantní ozubení	
délka řezu D	ozubení (Z_pZ)
do 3 mm	32
do 6 mm	24
do 10 mm	18
do 15 mm	14
15–30 mm	10
30–50 mm	8
50–80 mm	6
80–120 mm	4
120–200 mm	3
200–400 mm	2
300–800 mm	1,25
700–3000 mm	0,75

Variabilní ozubení	
délka řezu D	ozubení (Z_pZ)
do 30 mm	10–14
20–50 mm	8–12
25–60 mm	6–10
35–80 mm	5–8
50–100 mm	4–6
70–120 mm	4–5
80–150 mm	3–4
120–350 mm	2–3
250–600 mm	1,4–2
500–3000 mm	0,75–1,25

Přes výše uvedené návrhy berte v úvahu doporučení Vašeho dodavatele a nechte si od něj odborně poradit i přesto, že výrobci Vám často doporučí vlastní pilové pásy.

3. Ovládání stroje / Bedienung der Maschine / Machine control

3.1. Starting the band saw

» 1. Switch on the main switch of the band saw. The main switch is placed on the switchboard side.

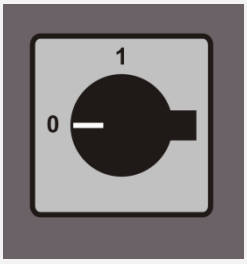

2. Switch the saw's safety (control) circuit on –button **No.4** at the control panel of the saw.

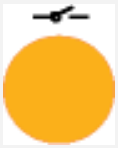

3.2. Control panel

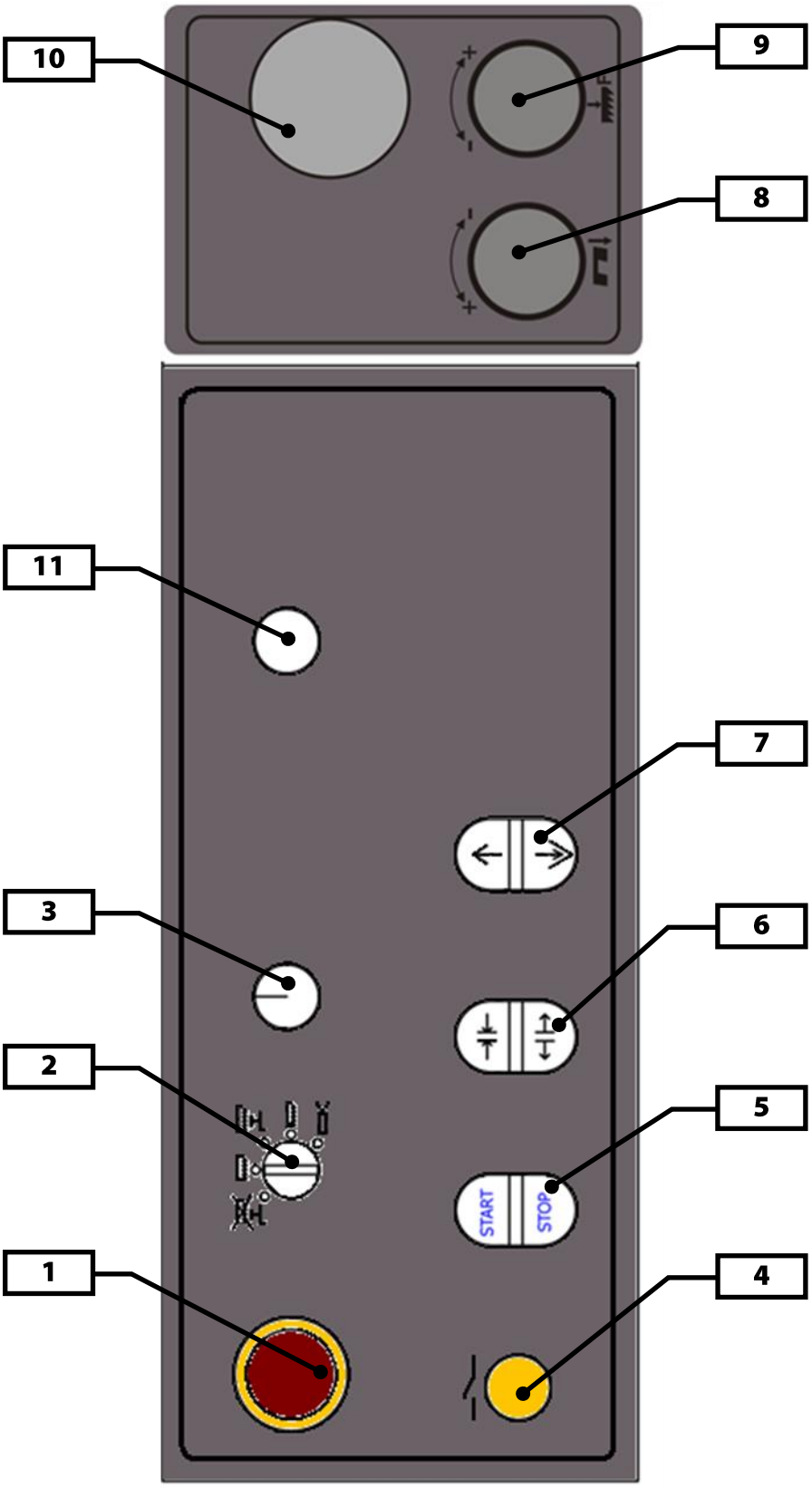

1	**Emergency Stop Switch** Sie setzt die Maschine in Notfällen sofort still.
2	**Cooling system selection** You can select from three possibilities: See chapter "Setting of a cooling method"
3	**Frequency converter** Frequency converter sets the speed of saw band in the range of 20-120m.min^{-1}
4	**Safety circuit** Button switch on the control circuit of control system
5	**START/STOP - Switch on / off the working cycle** Push of a button START starts the cutting cycle Button STOP stops or brake cutting cycle.
6	**Open/Clamp main vice** Pressing and holding the button in manual mode allows voltage and solve the main chip stocks. The feed vice must always be clamped earlier than the main vice
7	**Lift/Lower the saw arm** Pressing and holding button lifts or drops saw arm by the lifting hydraulic cylinder. It is possible to lift the arm using the whole range of the lifting hydrauic cylinder. As you move down saw arm, you can activate **rapid lowering** bypressing both buttons simultaneously
8	**Regulation valve** Regulation valve sets the lowering speed of the frame into the cut. The speed is limited by the adjustment of the pressure regulation in the cut on the guiding cubes. **Note:** If the throttle valve is closed too tightly, the valve seat may be damaged and may start to leak. Tighten the valve lightly.
9	**Cutting pressure regulation** Adjust the arm pressure to the cut. **Notice:** If you keep closing the throttle valve too tightly, the valve seat may wear off which causes its leakage. Therefore, close the valve always gently.
10	**Cutting pressure manometer** Pointer to cut pressure adjustment
11	**Laserliner – optional accessory** Switcher of the laser beam

3.3. Machine control

1. Lift the saw arm so that the lower portion of the bandsaw blade (cut) about 10 mm above the material is located (starting position). Raising the arm is ensured by the establishment ..
2. When pressing the START button to start the cutting cycle
3. Pressing the START button starts the saw blade drive, the arm begins to sink into the cut. After the cutting process, the arm moves to the preset lower position (see the lower arm position adjustment of the stop) and then raises the arm to the starting position. When pressing the START button, the starting position of the key is stored, ie that the arm after the cut returned to the position in which the START button is pressed.

3.4. Cycle breaking

»
- **STOP button**

  Semi-automatic cycle is interrupted by pressing **STOP** of the cycle

  The arm stops fall into cut and saw blade is stopped.

  By pressing button **START** of the working cycle, you can start the cycle.

- **Emergency Stop Switch**

  In case of the risk, press Emergency Stop Switch**.**

  After pressing button, saw band drive is immediately broken and the arm sinking is stopped.

- **Reactivation**

  1. Turn Emergency Stop Switch according to the arrows (on the button).
  2. Switch the saw's safety (control) circuit on –button **No.4** at the control panel of the saw.
  3. Lift saw arm above cut material and push START button.

3.5. Band saw adjusting

3.5.1. Cutting speed adjusting

Band speed is possible adjusted continuously from 20 to 120 m / min.

Use the frequency convertor on control panel (pos. **3**) to adjust requested speed of the saw band.

3.5.2. Speed adjustment of the arm lowering

Speed of the arm lowering is adjusted by regulation valve on control panel (pos. **8**).

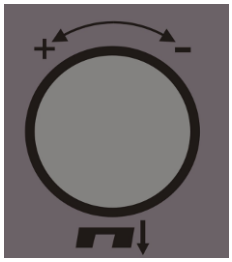

- Set the ***lower speed*** of the arm lowering to the cut by turning the switch ***clockwise***.

> ***Notice:***
> *If you keep closing the throttle valve too tightly, the valve seat may wear off which causes its leakage. Therefore, close the valve always gently.*

- Set the ***higher speed*** of the arm lowering to the cut by turning the switch ***anti-clockwise***.

3.5.3. Adjustment of pressure to the cut

The band saw **Proline 520.450 H/Hsx** is equipped with cutting pressure regulation on the both guiding cubes.

Pressure adjusting is performed with governing valve **9** on control panel. The pressure to the cut is displayed on the cutting pressure manometer **10** on control panel .

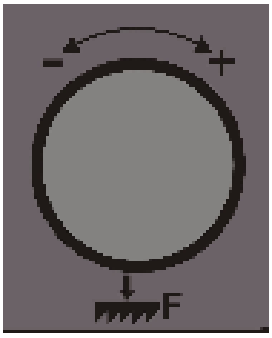

> ***Notice:***
> *If you keep closing the throttle valve too tightly, the valve seat may wear off which causes its leakage. Therefore, close the valve always gently.*

- **Lower** pressure to the cut – turn the wheel against the clock's direction.
- **Higher** pressure to the cut – turn the wheel **to the clock's** direction.

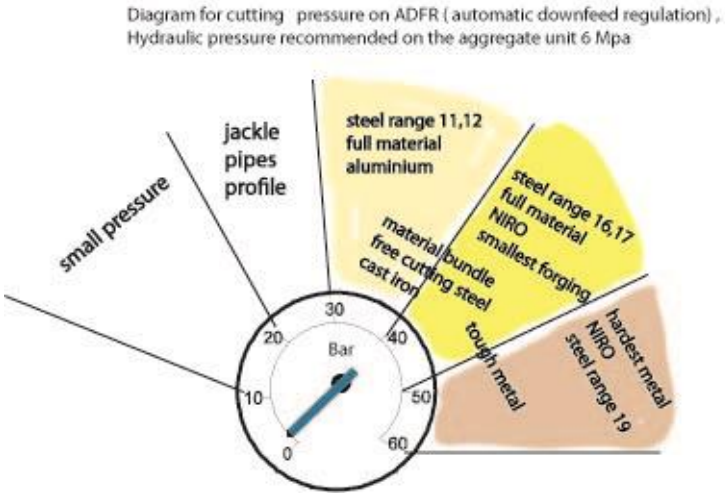

3.5.4. Saw frame upper position stop adjustment – lift arm adjustment

The position of the guide arm is monitored by a transducer which is located in the rear arm portion. In order to shorten the cycle time, the amount of Armhubs can be adjusted according to the height of the material to be cut.

1. Insert material in a vice
2. Take arm using the **Arm up** to a position above the material.
3. Carefully pull off the arm of the material using the **Arm down**., or rapid move. Arm stops 5-10 mm above the cut material
4. Adjust the height of Armhubs material according to height so that the top of the adjustable eccentric with a scale indicating the desired value (the value of the eccentric-scale corresponds to the value of the material height)
5. Pressing the START button for the beginning of the cutting cycle.

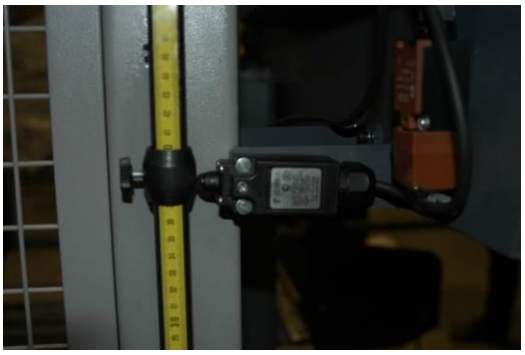

Setting the Armhubs using the incremental transducer of the upper arm position (optional accessories):

1. Insert material in a vice
2. Take arm using the **Arm up** to a position above the material.
3. Carefully pull off the arm of the material using the **Arm down**., or rapid move. Arm stops 5-10 mm above the cut material
4. Pressing the START button for the beginning of the cutting cycle
5. Of the saw, the material is cut to the lower arm position and moves back into the upper arm position in which the START button has been pressed (the saw notes the position - upper arm stop)

3.5.5. Saw frame lower position stop adjustment

The lower arm stop separates the bottom arm position.

This stopper is to be set according to the amount of material to be cut (the scale).

An incorrect setting of this attack, the saw can cut too deeply into the table of a vice or the material is not completely cut through.

Adjustment of the stop of the lower arm position with the aid of the adjustable eccentric to the column of the arm.

The limit is set by the manufacturer, this is not readjust

3.5.6. Adjusting band guides

If you want to achieve a smooth and precise cut, it is helpful to position the guide cube as close as possible to the material.

1. Release the stopping lever of the listel. Move the left part of the guide so that the left edge of the guide blocks is as close as possible cutted material.
2. Lower the frame to the lower position and check the position of the guide cube towards vice loading area. The guide cube must be a distance of at least 10 mm from the vice loading area.
3. Tighten the lever of the gib and check the guide cube setting once more for possible collision with binding table or vice jaw.

3.5.7. Brush adjustment

The brush for chip removal from the saw band influences cutting durability saw band lifetime and wheels lifetime, hard metal guides and finally the cut accuracy. Brush adjustment must be checked every shift.

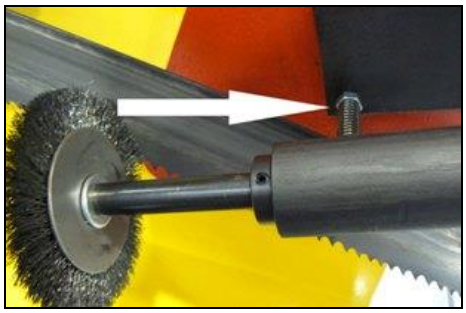

1. Release the fixative screw of the brush. It is possible to move with the brush.
2. Set the brush to the saw band according to the picture.Tighten the fixative screw.
3. In case, that the brush is not turned right (driving wheel slips on the driving wheels of the saw band), push by means of the screw (see arrow) driving wheel of the brush to the driving wheel of the saw band.

Attention!
*The brush **must not** touch the bottom of the saw teeth!*

Attention!
The screw must not be tightened with heavy force, because driving wheel of the brush can be damaged or the lifetime of the bearings of the driving wheel of the band can be lowered!

3.5.8. Setting of a cooling method

Required cooling method can be selected using a switch no. 3 on control panel.

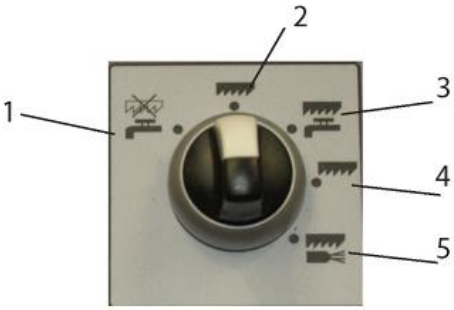

Liquid cooling

1. Coolant pump runs when the drive of the belt is switched off (rinse)
2. Saw band runs without cooling
3. Cooling starts while starting of the drive of the saw band .

Oil mist – Micronizer (optional accessory)

4. Saw band runs without cooling
5. Cooling starts while starting of the drive of the saw band

3.6. Material insertion

- Never walk under a suspended load!
- Never climb onto the gravity-roller conveyor!
- Do not hold the material for clamping material to the vice! The vice can cause injury!

3.6.1. Handling agent selection

- Use the strong handling agents to lift and transfer the material!
- Handle with the material only with the lift truck or use the suspension strands and the crane!
- Do not use the lift truck or crane in case that you do not have the license to handle with it!

3.6.2. Insertion

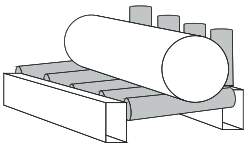

Insert material to the vice and ensure that the material cannot move in the vice or fall from the vice after the clamping. If you cut long pieces of the material (for example rod, tube), you must use the roller conveyors for material shifting to the band saw. Contact Bomar for more information about roller conveyors

Make sure the conveyor is long enough and the material cannot tip off the conveyor.

Be especially careful with round materials that it always stays on two vertical rollers and that it cannot fall off the conveyor!

3.6.3. Bundle material cutting

Attention:
Manualbundle clamping device is not standard equipment. Without this device is a not possible cut bundle.
Attention!
If machine has bundle device then material maximal height is half.

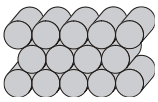

If you want to cut the material in the bundle, there are suggestions for the positioning of bundles

Round material bundle: Take care especially with round material that the bars are put according to the picture. If the bars are put differently, you may have problems with movement.

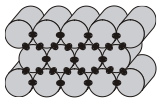

Always weld the material at the rear end of the bundle to secure it from moving.

Before welding always, switch the machine off at the main switch! The magnetic fields, which often occur during welding, may damage the controls!

Attention:
Not all material shapes are suitable for bundle cuts. Keep the recommendation of your supplier of the saw bands for material insertion to the bundle.

3.6.4. Hydraulic bundle camping device (optional accessories)

To better maintain the workpiece in the vise recommend using **hydraulic bundle clamping device** that is not part of the standard equipment, optional accessories only. It is suitable especially in the case of uneven cutting material.

4. Údržba stroje / Wartung / Machine service

4.1. Saw band dismantling

During the dismantling, take care that you do not damage the limit switch if the saw band stretching.

1. Lift the saw frame to the top position. Stop the saw frame in top position by control valve.

2. Dismantle yellow protective cover of the saw band. The cover is clamped with two screws.

3. Open the cover of the arm.
4. Turn by stretching star to the left side, release saw band stretching and pull saw band from blade wheels.

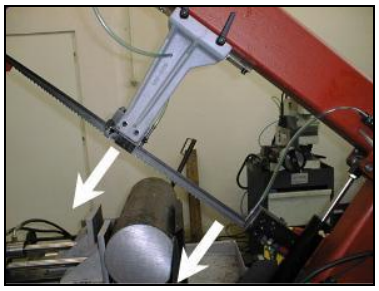

5. Pull up the saw band from the guiding cubes

4.2. Saw band installation

During the installation, take care that you do not damage the limit switch if the saw band stretching!

1. Prior to installation, clean all track wheels, guide cubes and inner side of the arm thoroughly of all traces of chips and dirt. ***Keep in mind the teeth direction when installing the saw band.***

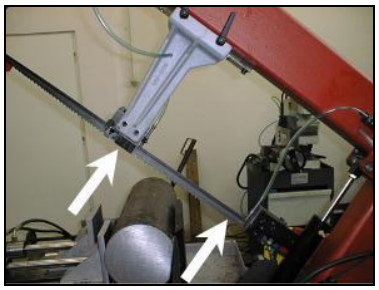

2. Insert new saw band in the guide cubes. Make sure the saw band runs between both guide rollers and it is pushed all the way to the top.

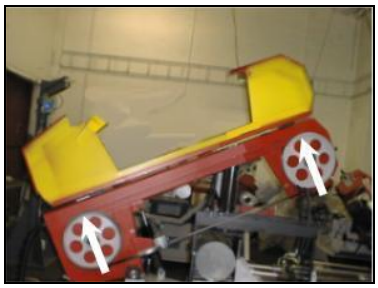

3. Put the saw band on both guide wheels. Make sure that the saw band ridge fits tightly to the wheel rim. Then push the saw band as far back as possible.
4. By turning the stretching star to the right, you will stretch the saw band slightly. Remove the plastic cover of the saw band teeth.
5. Close the cover of the arm.

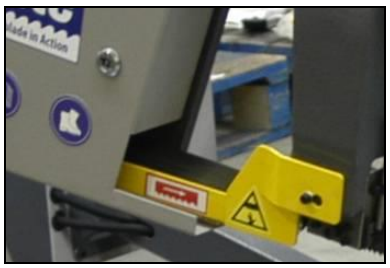

6. Install the yellow protective cover of the band. The arrow on the cover must match the direction of the arrow on the band. If it does not, you must turn the band round.

4.3. Saw band stretching and rupture inspection

Right saw band stretching is one of the most important criteria's, which influents accuracy and saw band service life. Stretch the saw bands according to the selected saw band and the band saw. Keep the recommendation of your manufacturer.

Check the band stretching carefully and regularly - adjust if necessary.

Pilový pás Sägeband Saw band	Napětí pilového pásu Sägebandspannung Blade tension	Napětí pilového pásu PSI (pro Tenzomat) Sägebandspannung PSI (für Tenzomat) Blade tension PSI (for Tenzomat)
20 x 0,9 mm	160 $N.mm^{-2}$	23 500
27 x 0,9 mm	180 $N.mm^{-2}$	26 500
34 x 1,1 mm	210 $N.mm^{-2}$	30 500
41 x 1,3 mm	240 $N.mm^{-2}$	35 000
54 x 1,3 mm	240 $N.mm^{-2}$	35 000
54 x 1,6 mm	280 $N.mm^{-2}$	40 600
67 x 1,6 mm	290 $N.mm^{-2}$	42 000
80 x 1,6 mm	300 $N.mm^{-2}$	43 500

4.3.1. Saw band stretching

This device checks the saw band stretching and causes immediate machine shut – down in the event the band ruptures.

- Remove the protective cover of the device (if not removed).
- The saw band to the optimum value (see table) using the Allen screw clamping, the value of the band tension can be checked on the display of the band tension (gauge). When tensioning the band saw a Tensomat can be used (optional Accessories)
- Refit the protective cover

The device contains limit switch. Check the stretching carefully and periodically – eventually adjust.

Each limit switch complies with the machine two basic functions:

- signals the moment the band tension with the target value of this setting, the machine can be switched on, ie if the tape is stretched and turned on the limit switch.
- meets the safety function and, in the event that the saw band breaks or any other problem that directly affect the value of the band tension has shut down immediately and stops the whole machine.

The limit is set by the manufacturer, this is not readjust.

4.3.2. Saw band run adjustment on stretching wheel

Saw band run on the stretching wheel must be regularly inspected. The inspection has to follow every saw band replacement

If the band drive is not set correctly, the following problems may occur:

- **The saw band falls off the wheel** – the saw band and protective cover can be damaged.
- **The saw band runs on the wheel rim** – The saw band and wheel rim can be damaged

1. Turn the saw band drive and then again
2. Turn off the main switch!
3. Open the cover and check the saw band run
4. Check the saw band run to the wheels.

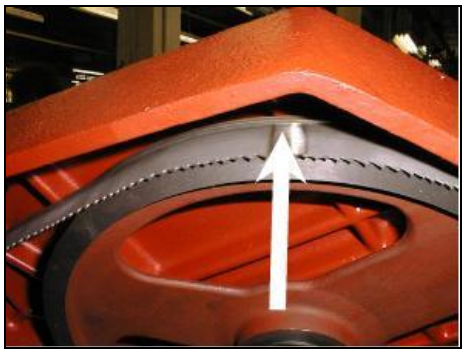

- if the distance between backside of the saw band and the offset wheel is **1 – 3 mm**, setting is right
- if the distance is bigger than **3 mm**, or the saw band is on the offset of the wheel, set the saw band

The saw band runis adjusted with the adjustment screw.

The saw band run is adjusted with an Allen screw in the tension prism of the arm. If the distance of the rear part of the saw band from wheel rim is **1 mm**, setting is right.

- Turn the adjusting screw to the right, then the bandsaw moves closer to the border.
- Turn the screw to the left, then the bandsaw moves further from the border.

After adjustment check the saw band run again.

4.4. Cooling agents and chips disposal

The quality of the cooling agent will deteriorate due to:	If the solution is too weak:	If the solution is too strong:
• use of contaminated water • impurity • outside oil contamination (hydraulics, gears) • high operating temperatures • lack of air circulation • wrong concentration	• corrosion protection is diminished • lubrication decreases • microbial attack is more likely	• the cooling ability is decreased • foam behavior increases • emulsions stability deteriorates • sticky residue develops

4.4.1. Coolant device inspection

The state of the cooling agent has significant influence on the cutting quality and on the operational life of the machine. Lifetime of the cooling liquid is 1 year, after this time we recommend change the cooling liquid. This time is dependent on the degree of pollution cooling liquid (especially with oils) and on the other factors.

Check level of the cooling liquid and function of the pump periodically!

Note:
If the state of the cooling liquid is not satisfactory, the cooling liquid must be changed.

Check the state of the cooling agent according to the following table:

Testing	Interval	Method	Condition	Precaution
Liquid level	daily	visually	too low	after concentration check, refill with water or emulsion
Concentration	daily	refractometer densimeter	too high too low	refill water refill base emulsion
Smell	daily	by sense of smell	unpleasant smell	good ventilation, add biocides or renew coolant
Contamination	daily	by sense of smell	visible oil leaks, sludge fungi	surface cleaning, fix leaks, add biocides or fungicides, or coolant renewal after added system cleanser*
Corrosion-protection	when necessary	visually chip test Herbert-test	insufficient corrosion protection	test stability, if necessary – increase concentration or pH value
Stability	when necessary	refractometer	oiling	add concentrate, enquiries to supplier
Foam reaction	when necessary	shaking test	too much foam, foam disperses too slowly	avoid aeration, increase water hardness, ix with defoamer

* According to manufacturers' instructions

4.4.2. Chips disposal

Chips resulting from cutting operations must be disposed of in accordance with the relevant regulations.

- Let the chips drip excess fluid!.
- Fill a watertight container with the chips! Be careful that the container does not leak, because even after a long dripping time, they still contain coolant residue.
- *Place the container into the care of a disposal company equipped for the disposal of chips contaminated with cooling liquid.* In case the machine is equipped with micro-spray installation, the chips must also be handed over to a disposal company.

4.4.3. Gun cleaning machines from chip (optional accessories)

Tool cleaning machines from chips after cutting.

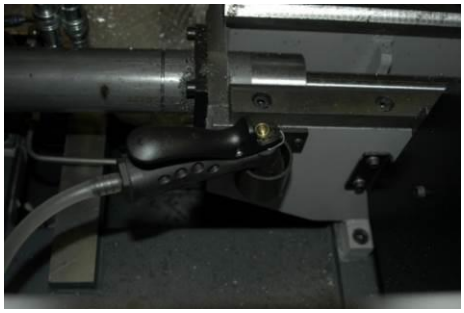

With custom pump (min. capacity 16 l / min.) The coolant gets into the rinsing pistol with the trigger lever.

Sufficient pressure to the chips and debris were eliminated from the bearing surfaces of the base material and the saw.

Gun cleaning machine from the chip is supplied with a sufficient supply hose for easy handling (diameter of 12/8 mm).

Package includes:.

1. Ergonomic handle allows easy handling of the gun during cleaning machine.

2. Brass adjustable nozzle allows for smooth width rinse stream.

3. Valve for setting maximum coolant flow

4. Also included is a convenient holder for postponement gun after useí

Suitable for machine brand Bomar

4.5. Hydraulic, Greases and oils

4.5.1. Gearbox oils

In gearboxes, oil is used for the whole lifetime of the gearbox. We recommend replacing of the filling oil in case of repair.

Use oils with specification DIN 51517 in the gearboxes. Select the viscosity grade ISO VG according to the original oil fill.

Attention:
When replacing, use oils recommended by BOMAR or oils, which has comparable parameters from the other manufacturers. Do not forget, that mineral and synthetic oils must not be mixed!

Recommended oils and quantity according to the type of the band saw

Band saw	Gearbox oil	Capacity
Proline 520.450 H/Hsx	Shell Tivela S 320	1,0 l

Comparative table of the gearbox oils

Manufacturer	Viscosity grade		
	ISO VG 100	ISO VG 220	ISO VG 320
BP	Energol GR-XP 100	Energol GR-XP 220	Energol GR-XP 320
Castrol	Alpha SP 100 Alpha MW 100	Alpha SP 220 Alpha MW 220	
Elf	Reductelf SP 100	Reductelf SP 220 Reductelf Synthese 220	Reductelf SP 320
Esso	Spartan EP 100	Spartan EP 220	Spartan EP 320
Mobil	Mobilgear 627	Mobilgear SHC 220 Mobilgear 630	Mobilgear 632
ÖMV		PG 220	
Paramo	PP 7	Paramo CLP 220	Paramo CLP 320
Shell	Shell Omala 100	Shell Omala 220 Shell Tivela S 220	Shell Omala 320 Shell Tivela S 320
Total	Carter EP 100	Carter EP 220	Carter EP 320

4.5.2. Lubricant greases

We recommend using lithium based saponified grease, class NGLI-2 for lubrication. Different greases are mixable, if their oil bases and consistence type are identical.

Comparative table of the lubricant greases:

Manufacturer	Type of the lubricant grease
BP	Energrease LS - EP
DEA	Paragon EP1
Esso	FETT EGL 3144
	Beacon EP 1
	Beacon EP 2
FINA	FINA LICAL M12
Klüber	Microlube GB0
	Staburags NBU8EP
	Isoflex Spezial
Optimol	Optimol Longtime PD 0, PD1, PD2
Shell Aseol AG	ASEOL Litea EP 806-077
Texaco	Multifak EP1

4.5.3. Lubrication

There are several placing on the machine, which are necessary to grease periodically. It secures the right function of the machine.

Lubrication place	Lubrication
	The guiding cubes leading – grease with oil from both sides once a week.
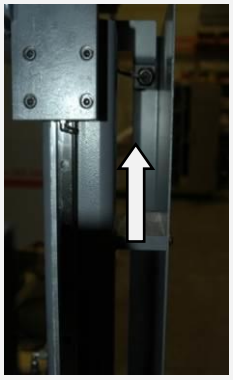 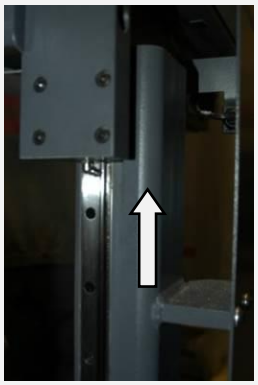 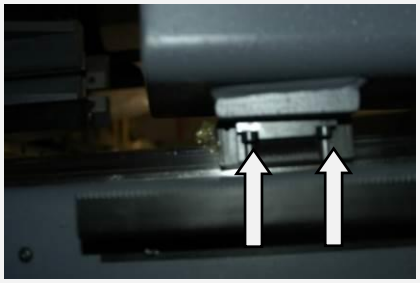	**4 x linear carriage for moving the saw arm** Linear guide of the saw arm - every three months. Lubricate with a grease (see Chapter greases). Every carriage of the linear guide grease with about 3-5g of grease. Use for lubrication grease gun. During the lubrication shut down the linear carriage 3 to 5 times back and forth.

4.5.4. Hydraulic oils

Replace the hydraulic oil once a year, because the oil can deteriorate its properties and cause problems the hydraulic equipment. If the hydraulic system is equipped with filter (2SF 56/48-0,063), replace the filter too.

Use oils with specification DIN 51524-HLP, ISO 6743-4 and viscosity grade ISO VG 32 in hydraulic aggregates. Hydraulic oils quantity – see chapter **Hydraulic oil level check**.

Note:
When replacing, use oils recommended by BOMAR or oils, which has comparable parameters from the other manufacturers. Do not forget, that mineral and synthetic oils may not be mixed!

Comparative table of the hydraulic oils

Manufacturer	Type	Manufacturer	Type
Agip	Oso 32	Ina	Hidraol 32 HD
Aral	Vitam GF 32	Klüber	Lamora HLP 32
Avia	Avilub RSL 32	Hungary	Hidrokomol P 32
Benzina	OH-HM 32	Mobil	Mobil DTE 25
BP	Energol HLP 32	ÖMV	HLP 32
Bulgaria	MX-M/32	Poland	Hydrol 30
Castrol	Hyspin AWS 32	Rumania	H 32 EP
Čepro	Mogul HM 32	Russia	IGP 30
DEA	Astron HLP 4hy6	Shell	Tellus Oil 32
Elf	Elfolna 32	Sun	Sunvis 832 WR
Esso	Nuto H 32	Texaco	Rando HD B 32
Fam	HD 5040	Valvoline	Ultramax AW 32
Fina	Hydran 32		

4.5.5. Hydraulic unit service

After 50 hours working time, or the latest 3 months after the first run, the first service should be carried out. This includes:

- checking off all screws and connections, fixing points, tubes and hoses for leakage
- Check hydraulic oil level
- During time of duty the oil temperature shouldn´t exceed 60-70°C
- check function of signaling components (thermometer, level gauge, dirty filter indicator)
- Check the adjustment of working pressure

To realize a high reliability of the power pack, the manufacturer lays down following inspection intervals

Interval	daily	weekly	monthly	three monthly	six monthly	annually
Hydraulic fluid						
Level	-	•	-	-	-	-
Temperature	-	•	-	-	-	-
Condition	-	-	•	-	-	-
Change interval	-	-	-	-	-	•
Filter						
Change interval	-	-	-	-	-	-
Other checks						
External Leakages	•	-	-	-	-	-
Contamination	•	-	-	-	-	-
Damages	•	•	-	-	-	-
Noise-(level)	•	-	-	-	-	-
Gauges	-	-	•	-	-	-

4.6. Machine cleaning

Clean the machine from the cooling liquid and impurities after every shift stopping. Conserve the guiding surfaces, mainly.

- Clamping jaws guiding of the vice.
- The guiding of the feeder.
- Loading surface of the vice.

4.7. Worn pieces replacement

4.7.1. Hard metal guides replacement

If the hard metal guides cannot be adjusted, they have to be replaced.

1. Dismantle the saw band. Remove the hosepipe leading the cooling agent. Dismantle guide cube of the saw band.

2. Loosen the adjusting screws of the metal guide.

3. Loosen the binding screw of first metal guide. Remove adjustable hard metal guide.

4. Loosen the binding screw of second metal guide. Remove the hard metal guide
5. Insert new hard metal guides and fasten them tightly.
6. Mount the saw band. Adjust the hard metal guides.

4.7.2. Round brush replacement

If the chip removing brush is so worn, that it does not fulfill its function, the brush must be replaced.

1. Release the nut of the brush, exchange old brush to new brush and screw on the nut of the brush.
2. Set the brush to the saw band.

4.7.3. Saw band guiding rollers replacement

If the saw band is not sufficiently guided by guiding pulleys or if the pulleys are obviously worn, the pulleys should be replaced.

ATTENTION!
Guiding pulleys must be replaced together on both guiding cubes!!

1. Dismantle the saw band.
2. Disconnect the hose from the cooling agent, screw off the pressure regulation. Let the pressure regulation connected to the hydraulic system. Dismantle the guiding cube of the saw band.

3. Tighten the guiding cube to the vice and dismantle both eccentrics with bearings following way.

ATTENTION!
Mark both eccentrics placing and components on the eccentric!
Eccentrics must not be replaced with each other!!

4. Screw off nuts from eccentrics..

5. Remove eccentrics from bearings by means of the swager

6. Change all bearings and other worn parts.

7. Install eccentrics to the cubes. Install components on both eccentrics in given order. Put bearings by means of the preparation on eccentrics.

ATTENTION!
Do not replace the eccentrics placing in the cube

8. Screw on nuts on both eccentrics and tighten them.

9. Insert the saw band to the guiding cube (ca. 15 – 20 cm). Set the eccentrics by means of the wrenches, the saw band must run in the centre. Guide pulleys must not press too much on the band, but must spin freely during the band run.
10. Tighten nuts on both eccentrics.
11. Remove the testing piece of saw band from the cube lead. Install the guiding cube on the machine and connect the pressure regulation to the cut and cooling. Install the saw band.

4.7.4. Stretching wheel replacement

1. Dismantle the saw band.

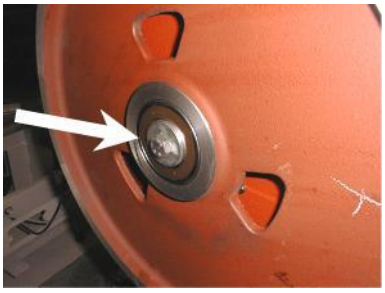

2. Screw off the screw and take down the washer.

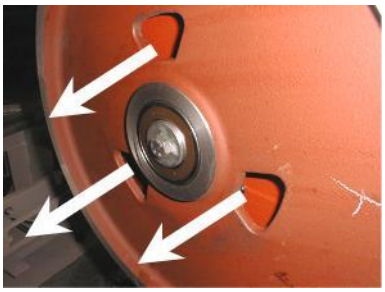

3. Pull off the wheel from the shaft by means of the three-armed puller. If bearing stayed on the shaft, pull off it too
4. Check score of the bearings of the stretching wheel and replace them for new.

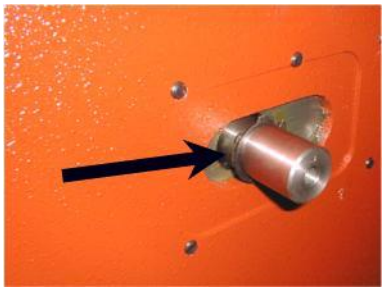

5. Clean the shaft and grease it with oil. Insert retaining ring to the groove.

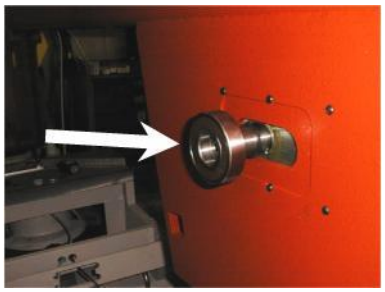

6. Install bearing on the shaft and move it to the retaining ring. Insert the distance ring on the shaft and move it to the bearing.

7. Insert the retaining ring to the hole in the wheel.

8. Insert the bearing to the hole in the wheel and press it to the retaining ring.

9. Put the wheel on the shaft and screw on the preparation to the wheel stretching to the hole in the shaft.

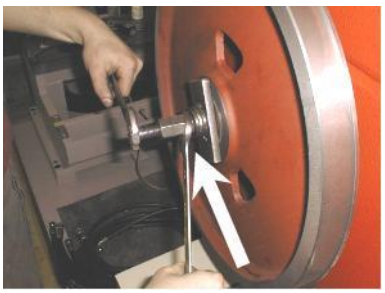

10. Pull on the wheel on the shaft.

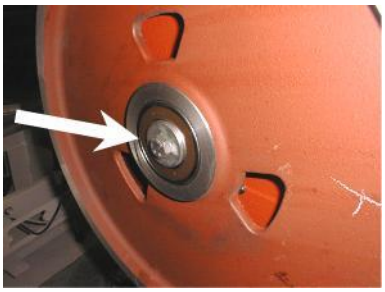

11. Screw on washer and screw back..
12. Install the saw band. Wheel replacement is ready.

4.7.5. Driving wheel replacement

1. Dismantle the saw band

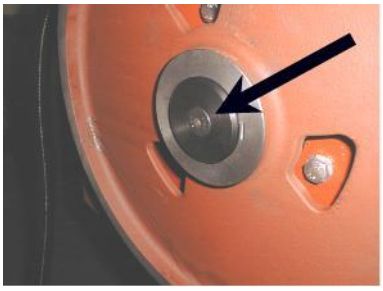

2. Screw off the screw and remove the washer.

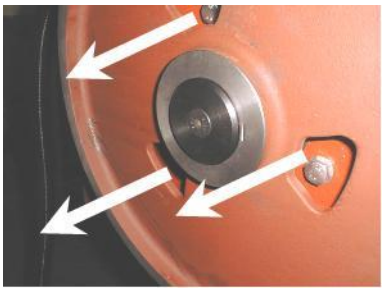

3. Pull off the wheel from the shaft by means of the three-armed puller.

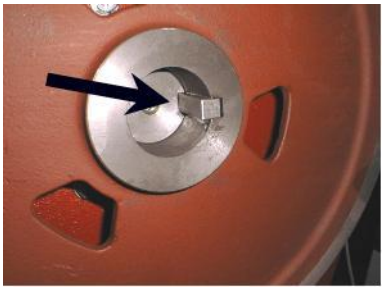

4. Install the wheel on the shaft. Insert the feather to the groove.

5. Screw on the preparation to the wheel stretching to the hole in the shaft. Pull on the wheel on the shaft.

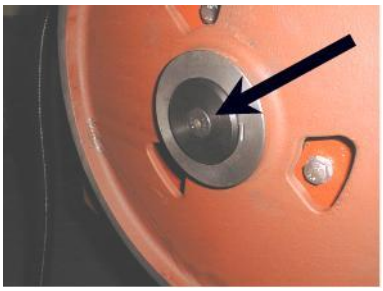

6. Screw on washer and screw back.
7. Install the saw band. Wheel replacement is ready.

4.7.6. Cooling pump replacement

Only a qualified worker can carry out the connection!

High-voltage shock may have fatal results

1. Pull the tank with the liquid from the pedestal..
2. Remove the hosepipe leading to the cooling agent from the plug on the pump. Screw off four screws from the cooling pump flange and pull out the pump from the sheet metal holder.

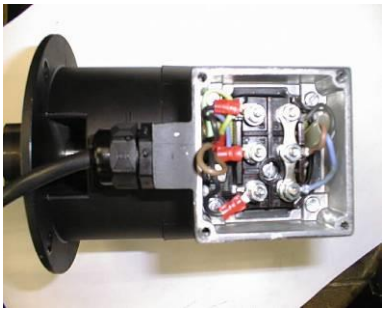

3. Remove the cover of the pump terminal switchboard. Disconnect 4 terminal connectors of the input cables. Cables are identified according to the red clamps..

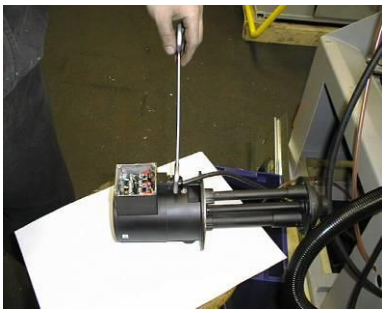

4. Loosen the bushing and pull the cable out from the pump.

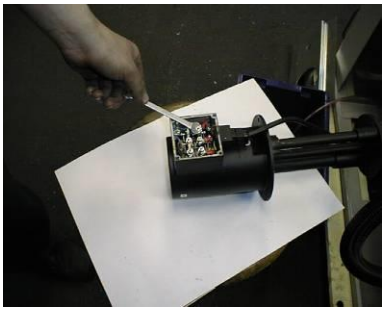

5. Dismantle new pump switchboard cover. Push the cable through the bushing and fasten it.

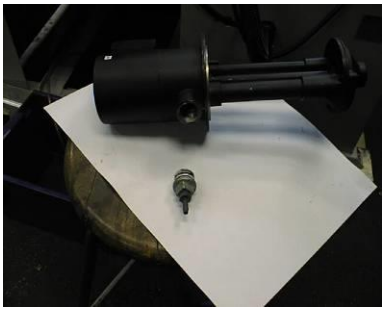

6. Screw on the cable bushing and cover of the terminal block. Do not forget the rubber gasket! Tighten the cooling liquid hose with non-stick tape and screw it again. Install cooling liquid hose, place the pump on the sheet metal holder and screw it

5. Závady / Störungen / Troubleshooting

5.1. Mechanical problems

Problem	Possible causes	Repair
1. Slanting cut	- Wrongly adjusted hard metal guides.	Set according to the chapter „Servicing and adjustment“
	- Worn hard metal guides.	Replace to the chapter „Worn pieces replacement“
	- Wrongly adjusted cubes of the saw band guiding.	Set according to the chapter „Servicing and adjustment“
	- Worn bearings of the saw band guiding.	Replace according to the chapter „Worn pieces replacement“
	- Wrongly adjusted swarf brush.	Set according to the chapter „Servicing and adjustment“
	- Worn swarf brush.	Replace according to the chapter „Worn pieces replacement“
	- Insufficient saw band stretching.	Rise the saw band stretching and set the limit switch.
	- Wrongly chosen tooth system of the saw band.	Replace the saw band and keep the instructions of manufacturer on new saw band choice.
	- Worn saw band.	Replace the saw band.
	- Wrongly balanced roller conveyor.	Set the roller conveyor.
	- Dirty feeding board.	Cleanse the feeding board from debris, chip and residue material.
	- Guiding arm and guiding cube are loosened.	Clamp the guiding arm.
	- Guiding arm and cube are too far from the material.	Set the guiding cube to the material.
	- Too fast cutting rate.	Lower the material feeding speed.
	- Unexpected oscillation in material quality.	Set the cut and feeding speed to the relevant material.
2. The cut is not cut upon desired angle	- Securing lever is loosened.	Check the securing lever efficiency and carry out its adjustment according to chapter „Servicing and adjustment“.
	- Set angle does not match the cut angle.	Check the angle adjustment with a protractor and possibly set it according to chapter „Servicing and adjustment“.
	- Insufficient saw band stretching.	Stretch the saw band and set the limit switch according to chapter „Servicing and adjustment“.
	- Guiding arm and guiding cube are loosened.	Fasten the guiding arm and the cube.
	- Dirt between material and clamping jaw.	Cleanse the material and mating jaw.
3. Short lifetime of the saw band	- Insufficient saw band stretching.	Raise the tightening of the saw band set the scanner of saw band tightening according to chapter „Servicing and adjustment“.
	- Worn swarf brush.	Check the swarf brush condition and replace it in case of excessive use as described in chapter „Worn pieces replacement“
	- Wrongly adjusted swarf brush.	Check swarf brush adjustment, set it according to chapter „Servicing and adjustment“
	- Over stretched saw band	Lower stretching of the saw band and set the limit switch of the saw band stretching according to chapter „Servicing and adjustment“
	- Wrongly adjusted hard metal guides.	Check the adjustment of the hard metal guides and carry out adjustment as described in chapter „Servicing and adjustment“
	- Worn hard metal guides of the saw band.	Check the condition of the hard metal guide and if it is too worn, replace hard metal guides according to chapter „Worn pieces replacement“

Problem	Possible causes	Repair
	- Worn saw band guide bearings.	Check guiding bearings and if you notice some sort of excessive damage, replace them according to chapter„Worn pieces replacement“
	- Wrongly adjusted guiding cubes of the saw band.	Set guiding cube according to chapter „Servicing and adjustment“
	- Wrongly adjusted down feed and saw band speed.	Adjust the feeding and speed of a saw band according to values published by saw band manufacturer.
	- Different material quality.	Adjust feeding and speed of a saw band according to desired material (try cut-test).
	- Low-class saw band	Replace the saw band (contact your local accessory supplier for more information)
	- Wrongly chosen saw band tooth system.	Replace the saw band and keep instructions of the manufacturer on the choice.
	- Wrongly adjusted tracking.	Check the space between top of a saw band and driving wheel. Perhaps adjust the tracking as described in chapter „Servicing and adjustment“
4. Insufficient cut output.	- Worn saw band.	Replace the saw band and keep instructions of the manufacturer on the choice.
	- Wrong saw band tooth system.	Replace the saw band and keep instructions of the manufacturer on the choice.
	- Wrongly set down feed and speed of a saw band.	Set feed and speed of a saw band according to values published by saw band manufacturer.
5. The cut is not finished.	- Wrongly adjusted lower stop point of the saw frame.	Check lower limit switch and screw.
	- Stop point surface is messed-up.	Cleanse stop point surface of the limit switch from debris and residue material.
6. By choke is not possible turn	- Metal clamps between valve and panel.	Clamps must be removed and put on the shaft O-Ring about 10x2 mm.
	- Metal clams are in body of valve.	Valve must be cleared or changed.
7. Saw band drive cannot be started.	- Pressure switch is adjusted wrong.	Set the pressure switch according to chapter „Servicing and adjustment“
	- Pressure switch is defective.	Replace defective parts of the pressure switch.
8. The saw bands are cracked.	- In stretching wheel is wrong adjusting geometry.	Adjust distance band from recess wheel c.2 mm according to operating instructions.
	- Hard metal plates of circuit saw band are not adjusting.	Hard metal plates of circuit saw band must be adjusting according to operating instructions.
	- Guiding cubes are not adjusting (bearings + hard metal circuit)	Guiding cubes must be adjusting (bearings + hard metal circuit) according to operating instructions.
	- Bearings of guiding cubes are used (rolling elements are damaged or outside ring of bearing has conical form).	Bearings of guiding cubes must be replaced. Bearings must be adjusting according to operating instructions.
9. Damage tooth system of the saw band	- In gripping the lifting cylinder is backlash.	
	- Squeezed pin upper or downer holder of the lifting cylinder.	Exchange complete upper or downer holder of lifting cylinder.
10. The saw is cut downing.	- Geometry of hardmetal guiding cubes is wrong adjusted.	Hardmetal guiding cubes must be adjusted.
	- Bearings of guiding cubes are used.	Bearings of guiding cubes must be replaced.
11. Cleansing of the saw band is not functional.	- Elastic wheel of the brush drive is worn-down.	Elastic wheel of the brush must be changed.
	- Knurling of the driving wheel is worn-down.	Driving wheel must be changed.
	- The shaft of the brush drive is rusted.	The shaft of the brush must be cleaned and oiled.

Problem	Possible causes	Repair
	- The brush position and the brush cover is adjusted wrong – with the brush cannot be turned.	The brush cover must be posed, in order to the brush can be turned.
12. The saw arm periodically rise and fall during the cut; this cause short lifetime of the saw band.	- Backslash in driving wheel lodgement on the shaft.	Change the driving shaft for a long one, new bearings, distance ring, new driving wheel, spring, two covers on the forehead of the shaft + screws.
	- Worn channel for spring.	

5.2. Electric and hydraulic problems

Problem	Possible causes	Repair
1. Machine is not possible start.	- In socket is not voltage	Line voltage must be checked.
	- Transfer relay is closed (thermal protector)	Each FA relay must be checked.
	- Limit switch of saw band stretching, cover of frame or cover of saw band is not started.	Check of saw band stretching and covers closing.
2. When cut is finished, the frame is not raising.	- Bottom limit switch is adjusted wrong.	Bottom limit switch must be adjusted according to chapter ADJUSTING.
	- In hydraulic (pneumatic) ring is error. HYTOS (BOSCH) is not acting to frame uplift.	Function of magnetic valve must be checked, valve must be closed, voltage of clamps and inductor must be checked.
3. Electric motor and pump are without voltage. Between contactor and thermal protector is not voltage.	- Wrong contactor.	Replace contactor of engine.
4. The indicator of speed saw band is not functional.	- Sensor of speed is not adjusted.	Sensor of speed must be adjusted.
	- Defective display	The display must be changed.
	- Wrong sensor – diode of indicator speed is not light.	Sensor must be changed and adjusted.
5. Protector is switched off from engine hydraulic aggregate MA3 sometimes.	- Into hydraulic system is high working pressure.	Service engineer must reduce the pressure in hydraulic system.
6. The hydraulic aggregate cannot be started	Auxiliary contact on thermo-relay FA1 is defective.	Replace the defective contact on motor starter FA1.
7. Hydraulic aggregate is switched on but the saw arm or the main vice is not functional	- Wrong connection of electrical supply. The electrical phases are connected conversely.	The phases must be switched. Only service engineer can do this.
8. Cooling is not active	Lack of cooling agent.	Fill the tank with cooling agent.
	- Thermal relay is defective	Change the thermal relay
	- Input hosepipe is broken or obstructed.	Check the cooling circuit and perhaps cleanse cooling system.
	- Cooling pump protection is defective	Check the protection of cooling pump if need change it.
	- Cooling pump is defective.	Replace the cooling pump.

5.3. Hydraulic problems

Problem	Possible causes	Repair
1. Hydrogenerator not supplying oil	• reverse rotation	Check the connections of each phase. Reconnect properly connection of the electrical phases.
	• shortage of oil in the tank	Add hydraulic oil
	• Oil viscosity does not correspond prescribed viscosity value	Change hydraulic oil.
	• Hydrogenerator malfunction	Call service
	• Wrong power supply connection.	Check the connections of each phase. Reconnect properly connection of the electrical phases.
2. Hydraulic oil contains bubbles	• Hydraulic circuit is not adequately deaerated	Make deaeration of hydraulic circuit.
	• Low oil level	Add hydraulic oil
	• the pump shaft seals damaged	Call service
3. Increased mechanical noise	• damaged joint drive	Call service
	• damaged or destroyed motor bearings	Call service
	• air intake	Check for leaks.
4. Low pressure, pump supplies oil	• problem in the safety valve	Wrong settings. Check the settings and adjust the safety valve.
	• pump wear	Call service
	• external or internal leakage	Call service
5. Hydrogenerator is seized	• damage by solid particles in oil	Make oil filtration, or call the service.
	• non-prescribed oil	Change hydraulic oil.
	• wrong type of oil	Change hydraulic oil.
	• exceeding the life of the pump	Call service
6. Overheating oil	• cooler malfunction	Check the cooler function or call service.
	• wear the pump, the energy is converted into heat	Call service
7. Hydraulic valve can not be readjusted	• electromagnet has no signal (voltage) - interrupted supply lines	Check again.
	• Electromagnet coil burnt	Replace coil – Call service.
	• spool valve sticking	Replace valve – Call service

6. Schémata / Schemas / Schemes

6.1. Elektrické schema / Elektroschema / Electric scheme – Proline 520.450 H

6.1.1. 3×400 V + PE, 50 Hz

Obsah / Table of contents / Inhalt

Strana Page Seite	Název strany Page name Seitenname	Datum Date Datum
/1	Úvodní strana / Start page / Startseite	17.07.2019
/2	Obsah / Table of contents / Inhaltsverzeichnis	21.11.2019
/3	Kusovník artiklů / Parts list / Artikelstückliste	21.11.2019
/3.a	Kusovník artiklů / Parts list / Artikelstückliste	21.11.2019
/3.b	Kusovník artiklů / Parts list / Artikelstückliste	21.11.2019
/3.c	Kusovník artiklů / Parts list / Artikelstückliste	21.11.2019
/3.d	Kusovník artiklů / Parts list / Artikelstückliste	21.11.2019
/3.e	Kusovník artiklů / Parts list / Artikelstückliste	21.11.2019
/3.f	Kusovník artiklů / Parts list / Artikelstückliste	21.11.2019
/4	Ovládací panel OP1 / Control panel OP1 / Bedienpult OP1	16.07.2019
/5	Rozmístění hydraulických ventilů / Placement of Hydraulic valves / Platzierung die Hydroventile	16.07.2019
/6	Rozmístění prvků v rozvaděči R1 / Placement of elements in enclosure R1 / Platzierung der Elemente im Schaltschrank R1	16.07.2019
/7	Silová část M1 / Power part M1 / Feld partie M1	17.07.2019
/8	Silová část M2,M3 / Power part M2,M3 / Feld partie M2,M3	29.10.2019
/9	Silová část M4, M5 / Power part M4, M5 / Feld partie M4, M5	21.11.2019
/10	Řidicí systém / Control system / Steuersystem	17.07.2019
/11	Tlačítka ovládací panel OP1 / Button control panel OP1 / Taste Bedienpult OP1	21.11.2019
/12	Vstupy / Inputs / Eingänge	21.11.2019
/13	Hydraulické ventily / Hydraulic valves / Hydroventile	21.11.2019
/14	Stykače motorů / Motor contactors / Motor-Schutzschalter	16.07.2019
/15	Bezpečnostní okruh / Safety circle / Sicherheitsbereich	21.11.2019
/16	Snímač výšky ramene / Sawframe position sensor / Rahmenposition sensor	16.07.2019
/17	Příslušenství / Accessories / Zubehör	21.11.2019
/18	SyncFree / SyncFree / SyncFree	16.07.2019

Kusovník artiklů / Parts list / Stückliste

Označení přístroje Device identification Geräteidentifikation	Typ přístroje Device description Gerätebeschreibung	Objednací číslo Type number Typennummer	Výrobce Manufacturer Hersteller	Skladové číslo Part number Lagernummer	Množství Quantity Menge	Umístění Location Stelle
-SN10.4					0	/17.6
-BM1	Bezpečnostní relé 24VDC, 3NO Safety relay 24VDC, 3NO Sicherheitsrelais 24VDC, 3NO	BT50	ABB	91.051.063	1	/15.5
-FA2	Pomocné kontakty - 1xNO+1xNC Auxiliary contacts - 1xNO+1xNC Hilfskontakte - 1xNO+1xNC	HKF1-11	ABB	91.046.002	1	/8.2
-FA3	Pomocné kontakty - 1xNO+1xNC Auxiliary contacts - 1xNO+1xNC Hilfskontakte - 1xNO+1xNC	HKF1-11	ABB	91.046.002	1	/8.6
-A10.4	Odchylka pásu Band deviation Bandabweichung	BDM2	BOMAR s.r.o.	266.254	1	/17.2
-TR1	Držák Holder Inhaber	30.6030-413	BOMAR s.r.o.	30.6030-413	1	/7.6
-HL1	Signálka LED červená na adaptér Red LED light for adapter Red LED-Licht für Adapter	M22-LED-R	EATON	91.061.027	1	/14.1
-KM2A	Stykač - 4kW/400V, 3P Contactor - 4kW/400V, 3P Schütz - 4 kW / 400V, 3P	AF09-30-01-11	ABB	91.040.047	1	/14.4
-KM2A	Mechanické blokování Mechanical interlock unit Mechanische Interlockeinheit	VM4	ABB	91.041.045	1	/14.4
-KM2B	Stykač - 4kW/400V, 3P Contactor - 4kW/400V, 3P Schütz - 4 kW / 400V, 3P	AF09-30-01-11	ABB	91.040.047	1	/14.6
-KM2B	Pomocný kontakt - 1xNO Auxiliary contact - 1xNO Hilfskontakt - 1xNO	CA4-10	ABB	91.041.044	2	/14.6
-SA1	Hlavice s otočným přepínačem - 4 polohy Head with rotary switch - 4 positions Kopf mit Drehschalter - 4 Positionen	M22 - WRK4	EATON	91.060.087	1	/11.7

The manufacturer reserves right to use an equivalent replacement device.

2

Kusovník artiklů / Parts list / Stückliste

Označení přístroje Device identification Geräteidentifikation	Typ přístroje Device description Gerätebeschreibung	Objednací číslo Type number Typennummer	Výrobce Manufacturer Hersteller	Skladové číslo Part number Lagernummer	Množství Quantity Menge	Umístění Location Stelle
-FU1	Pojistka trubičková - 4A/250V, pomalá, 5x20 Tube fuse - 4A/250V, slow, 5x20 Rohrsicherung - 4A / 250V, langsam, 5x20	T4A/250V	ESKA	91.230.015	1	/7.8
-RP1	Potenciometr 4k7 Potenciometer 4k7 Potentiometer 4k7	TP195 4k7/N20A	Elektronické součástky CZ, a.s	91.283.015	1	/9.5
-RP1	Hlavice potenciometru - 24mm Head of potentiometer 24mm Leiter Potentiometer 24mm	S8877 BLK	GES-ELECTRONICS, a.s.	91.060.063	1	/9.5
-RCF1	Filtr RFC vývodový Efferent RFC filter Ableitenden RFC Filter	FBOPR1624	Ing. Miroslav Vlček	91.041.015	1	/7.3
-RCF2A	Filtr RFC vývodový Efferent RFC filter Ableitenden RFC Filter	FBOPR1624	Ing. Miroslav Vlček	91.041.015	1	/8.1
-RCF6B	Filtr RFC vývodový Efferent RFC filter Ableitenden RFC Filter	FBOPR1624	Ing. Miroslav Vlček	91.041.015	1	/8.4
-RCF11	Filtr RFC vývodový Efferent RFC filter Ableitenden RFC Filter	FBOPR1624	Ing. Miroslav Vlček	91.041.015	1	/7.6
-RCF12	Filtr RFC vývodový Efferent RFC filter Ableitenden RFC Filter	FBOPR1624	Ing. Miroslav Vlček	91.041.015	1	/7.7
-+R10.4	Kleštinová vývodka Cable gland Kabelverschraubung	AG-1545.12.06	Schmachtl CZ s.r.o.	91.070.010	2	/17.6
-+R10.4	Matice černá Nut black Nuss schwarz	AG8245.12	Schmachtl CZ s.r.o.	91.072.010	2	/17.6
-FA1	Tepelné relé - 0.31A Thermal relay - 0.31A Thermische Relais - 0.31A	T16-0,31	ABB	91.050.020	1	/7.4
-FA2	Motorový spouštěč - 2.5A Motor starter - 2.5A Motorstarter - 2.5A	MS116-2,5	ABB	91.045.021	1	/8.2

The manufacturer reserves right to use an equivalent replacement device.

3

Kusovník artiklů / Parts list / Stückliste

Označení přístroje Device identification Geräteidentifikation	Typ přístroje Device description Gerätebeschreibung	Objednací číslo Type number Typennummer	Výrobce Manufacturer Hersteller	Skladové číslo Part number Lagernummer	Množství Quantity Menge	Umístění Location Stelle
-FA3	Motorový spouštěč - 1A Motor starter - 1A Motorstarter - 1A	MS116-1,00	ABB	91.045.019	1	/8.6
-H10.4	Maják - základna Lighthouse - Base Leuchtturm - Basis	SL7-CB-100	EATON	91.063.058	1	/17.3
-H10.4	Maják - žlutý Lighthouse - yellow Leuchtturm - gelb	SL7-L-Y	EATON	91.063.059	1	/17.3
-H10.4	Žárovka 24V Lamp 24V Lampe 24V	SL7-L24	EATON	91.063.061	1	/17.3
-KM1	Ministýkač 4kW/400V Minicontactor 4kW/400V Minischutz 4kW/400V	B6S-30-01-1.7-71	ABB	91.040.049	1	/14.2
-KM2A	Pomocný kontakt - 1xNC Auxiliary contact - 1xNC Hilfskontakt - 1 xNC	CA4-01	ABB	91.041.043	1	/14.4
-KM2B	Pomocný kontakt - 1xNC Auxiliary contact - 1xNC Hilfskontakt - 1 xNC	CA4-01	ABB	91.041.043	1	/14.6
-KM11	Stýkač 5,5kW/400V Contactor 5,5kW/400V Schütz 5,5kW/400V	AF12-30-01-11	ABB	91.040.051	1	/15.7
-KM11	Pomocný kontakt - 1xNO Auxiliary contact - 1xNO Hilfskontakt - 1xNO	CA4-10	ABB	91.041.044	1	/15.7
-KM12	Stýkač 5,5kW/400V Contactor 5,5kW/400V Schütz 5,5kW/400V	AF12-30-01-11	ABB	91.040.051	1	/15.8
-KM12	Pomocný kontakt - 1xNO Auxiliary contact - 1xNO Hilfskontakt - 1xNO	CA4-10	ABB	91.041.044	1	/15.8
-PA2	Pojistkový odpojovač E-90 - 2P Fuse disconnector E-90 - 2P Sicherungstrenner E90 - 2P	E 92/32	ABB	91.241.013	1	/7.5

The manufacturer reserves right to use an equivalent replacement device.

3.a

Kusovník artiklů / Parts list / Stückliste

Označení přístroje Device identification Geräteidentifikation	Typ přístroje Device description Gerätebeschreibung	Objednací číslo Type number Typennummer	Výrobce Manufacturer Hersteller	Skladové číslo Part number Lagernummer	Množství Quantity Menge	Umístění Location Stelle
-RE1	Ministýkač 4kW/400V Minicontactor 4kW/400V Minischutz 4kW/400V	B6S-30-01-1.7-71	ABB	91.040.049	1	/14.8
-RP1	Svorka rychloupínací Fastconnect clamp Fast Connect Klemm	WAGO 224-112	WAGO	91.250.009	3	/9.5
-SA1	Upevňovací adaptér + 1NO Attaching adapter + 1NO Montageadapter + 1NO	M22-AK10	EATON	91.061.021	1	/11.7
-SA1	Kontaktní blok - 1NO Contact block - 1NO Kontaktblock - 1NO	M22-K10	EATON	91.061.022	2	/11.7
-SA1	Upevňovací adaptér Mounting adapter Montageadapter	M22-A4	EATON	91.061.045	1	/11.7
-SB1	Hlavice dvoutlačítka bílá/černá start/stop Double button head white/black start/stop Doppelrundkopf weiß/schwarz Start/Stopp	M22-DDL-WS-GB1/GB0	EATON	91.060.034	1	/11.1
-SB1	Upevňovací adaptér + 1NO Attaching adapter + 1NO Montageadapter + 1NO	M22-AK10	EATON	91.061.021	1	/11.1
-SB2	Kontaktní blok - 1NO Contact block - 1NO Kontaktblock - 1NO	M22-K10	EATON	91.061.022	1	/11.2
-SB3	Hlavice dvoutlačítka bílá/černá, zavřít/otevřít Double button head white/black, arrow close/open Doppelrundkopf weiß / schwarz, Pfeil Schließen / Öffnen	M22-DDL-WS-*	EATON	91.060.055	1	/11.2
-SB3	Upevňovací adaptér + 1NO Attaching adapter + 1NO Montageadapter + 1NO	M22-AK10	EATON	91.061.021	1	/11.2
-SB4	Kontaktní blok - 1NO Contact block - 1NO Kontaktblock - 1NO	M22-K10	EATON	91.061.022	1	/11.3
-SB5	Upevňovací adaptér + 1NO Attaching adapter + 1NO Montageadapter + 1NO	M22-AK10	EATON	91.061.021	1	/11.4

The manufacturer reserves right to use an equivalent replacement device.

3.b

Kusovník artiklů / Parts list / Stückliste

Označení přístroje Device identification Geräteidentifikation	Typ přístroje Device description Gerätebeschreibung	Objednací číslo Type number Typennummer	Výrobce Manufacturer Hersteller	Skladové číslo Part number Lagernummer	Množství Quantity Menge	Umístění Location Stelle
-SB5	Hlavice dvoutlačítka bílá/černá šipka nahoru/dolů Double button head white/black, arrow up/down Doppelrundkopf weiß / schwarz, Pfeil nach oben / unten	M22-DDL-WS-*-*	EATON	91.060.054	1	/11.4
-SB6	Kontaktní blok - 1NO Contact block - 1NO Kontaktblock - 1NO	M22-K10	EATON	91.061.022	1	/11.5
-SB7	Upevňovací adaptér + 1NO Attaching adapter + 1NO Montageadapter + 1NO	M22-AK10	EATON	91.061.021	1	/15.6
-SB7	Hlavice prosvětleného tlačítka žlutá Yellow trasparent switch Leiter beleuchtet gelbe Taste	M22-DL-Y	EATON	91.060.053	1	/15.6
-SB501	Total stop - hlavice + 3xNC Emergency-stop mushroom push - button + 3xNC Not-Aus-Pilz - Taster + 3 xNC	YW1B-V4E02R	IDEC	91.060.084	1	/15.4
-SB501	Kontakt - 1x NO Contact - 1x NO Kontakt - 1x NO	YW-E10	IDEC	91.061.044	1	/15.4
-TR1	Toroidní transformátor - 400V/230V/20V 4,5A 90VA Toroidal transformer - 400V / 230V / 20V 4,5A 90VA Ringkerntransformator - 400V / 230V / 20V 4,5A 90VA	400V/230V/20V 4,5A 90VA	KARBAN s.r.o.	91.080.023	1	/7.6
-SQ21	Bezpečnostní koncový spínač - 2xNC Safety Limit Switch - 2x NC Sicherheitsendschalter - 2x NC	QKS8	KEDU	91.173.012	1	/15.4
-PA1	Pojistka válcová - 12A, 10x38, rychlá Tube fuse - 12A, 10x38, fast Rohrsicherung - 12A, 10x38, schnell	PV10 12A gG	OEZ	91.231.007	2	/9.1
-PA2	Pojistka válcová - 2A, 10x38, pomalá Tube fuse - 2A, 10x38, slow Rohrsicherung - 2A, 10x38, langsam	PV10 2A gG	OEZ	91.230.034	2	/7.5
-SQ4	Koncový spínač - 1NC+1NO Limit switch - 1NC+1NO Endschalter - 1NC+1NO	D4N-4A31	OMRON	91.173.007	1	/12.7
-SQ4	Koncový spínač - 1NC+1NO, M20, pomalý Limit switch - 1NC+1NO, M20, slow Endschalter -1NC+1NO, M20, langsam	D4N-4A32	OMRON	91.173.010	1	/12.7

The manufacturer reserves right to use an equivalent replacement device.

3.c

Kusovník artiklů / Parts list / Stückliste

Označení přístroje Device identification Geräteidentifikation	Typ přístroje Device description Gerätebeschreibung	Objednací číslo Type number Typennummer	Výrobce Manufacturer Hersteller	Skladové číslo Part number Lagernummer	Množství Quantity Menge	Umístění Location Stelle
-SQ1	Koncový spínač - 1NO + 1NC, kladka, pomalá akce Limit switch - 1NO + 1NC, pulley, slow action Endschalter - 1NO + 1NC, rolle, langsame Einwirkung	FR 605-M2	PIZZATO	91.173.009	1	/12.3
-SQ2	Koncový spínač - 1NO + 1NC, kladka, pomalá akce Limit switch - 1NO + 1NC, pulley, slow action Endschalter - 1NO + 1NC, rolle, langsame Einwirkung	FR 615-M2	PIZZATO	91.173.044	1	/12.4
-SQ3	Koncový spínač - 1NO + 1NC, dlouhá nastavitelná kladka, M2, snap action Limit switch - 1NO + 1NC, long adjustable pulley, M2, snap action Endschalter - 1NO + 1NC, lange verstellbare rolle, M2, schnapp	FR 655-M2	PIZZATO	91.173.045	1	/12.6
-FM1	Frekvenční měnič - 3.7kW, 3x400VAC Frequency converter - 3.7kW, 3x400VAC Frequenzumrichter - 3,7 kW, 3x400VAC	VFD037E43A	DELTA ELECTRONICS, INC.	91.012.094	1	/9.1
-QS1	3 pólový odpínač, 25A Disconnector - 3P, 25A Trennschalter - 3P, 25A	SAP25/03-M2	SALZER YUEQING LEYI	91.170.030	1	/7.0
-M1	Čerpadlo chlazení 120W Cooling pump 120W Kühlpumpe 120W	PA70/120	SAP srl	91.020.032	1	/7.4
-+R10.4	PS 41x89x74mm - šedá PS 41x89x74mm - grey PS 41x89x74mm - grau	Z54	SOS Electronic, spol. s r.o.	91.190.036	1	/17.6
-CU1	Řídící obvod Control unit Steuereinheit	SMA_4.01W	Bomar	265.918	1	/10.0
-+R10.4	Svorka Clamp Klemmen	WAGO.260-301	WAGO	91.250.008	1	/17.6
-+R10.4	Koncová bočnice End side Endseite	WAGO.260-361	WAGO	91.252.003	1	/17.6
-RCF0	Vstupní odrušovací filtr 16A Input noise filter 16A Eingangsrauschfilter 16A	16EB15/50	WIDECOM TECHNOLOGY s.r.o.	91.041.062	1	/7.1
-FU1	Svorka pojistková Fuse terminal Sicherungsklemme	WK4/THSi5U	WIELAND	91.251.102	1	/7.8

The manufacturer reserves right to use an equivalent replacement device.

3.d

Kusovník artiklů / Parts list / Stückliste

Označení přístroje Device identification Geräteidentifikation	Typ přístroje Device description Gerätebeschreibung	Objednací číslo Type number Typennummer	Výrobce Manufacturer Hersteller	Skladové číslo Part number Lagernummer	Množství Quantity Menge	Umístění Location Stelle
-M5	Ventilátor 24VDC, 154CFM Fan 24VDC, 154CFM Fan 24VDC, 154CFM	RDH1238 B2	Xinruilian Electronic Co.	91.015.126	1	/9.8

The manufacturer reserves right to use an equivalent replacement device.

3.e

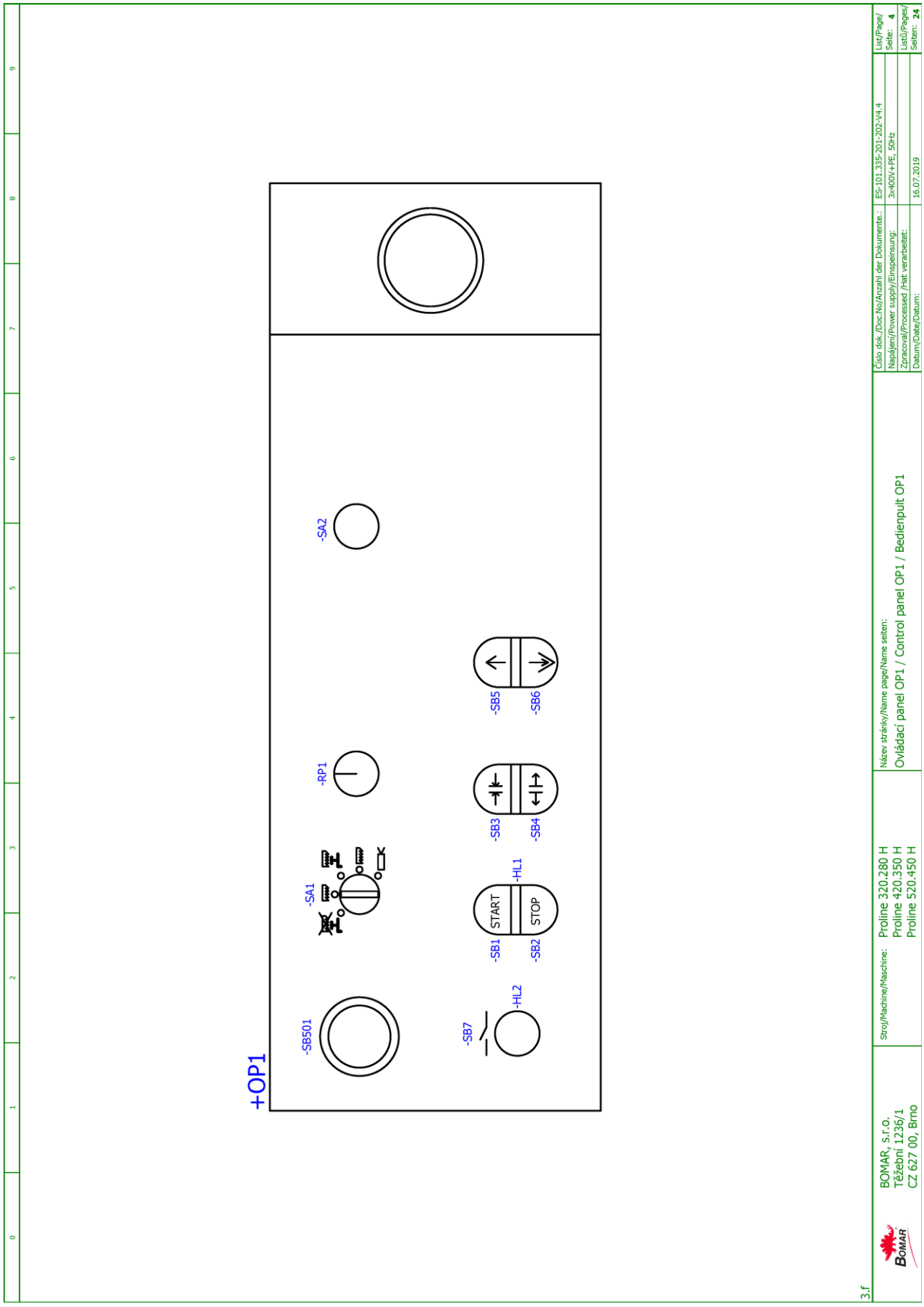
+OP1
-SB501
-SA1
-RP1
-SA2
-SB7
-HL2
-SB1
START
-HL1
-SB2
STOP
-SB3
-SB4
-SB5
-SB6
3.f
BOMAR, s.r.o.
Těžební 1236/1
CZ 627 00, Brno
Stroj/Machine/Maschine:
Proline 320.280 H
Proline 420.350 H
Proline 520.450 H
Název stránky/Name page/Name seiten:
Ovládací panel OP1 / Control panel OP1 / Bedienpult OP1
Číslo dok./Doc.No/Anzahl der Dokumente.:
ES-101.335-202-V4.4
List/Page/Seite: 4
Napájení/Power supply/Einspeisung:
3x400V+PE, 50Hz
Listů/Pages/Seiten: 24
Zpracoval/Processed /Hat verarbeitet:
Datum/Date/Datum:
16.07.2019

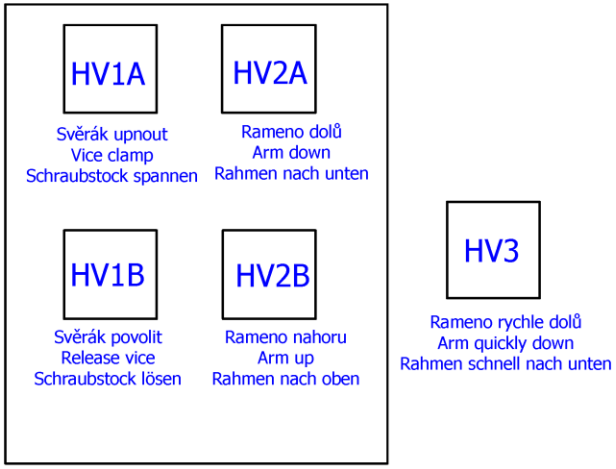

4

BOMAR, s.r.o. Těžební 1236/1 CZ 627 00, Brno	Stroj/Machine/Maschine:	Proline 320.280 H Proline 420.350 H Proline 520.450 H	Název stránky/Name page/Name seiten: Rozmístění hydraulických ventilů / Placement of Hydraulic valves / Platzierung die Hydroventile Placement of elements in enclosure R1	Číslo dok./Doc.No/Anzahl der Dokumente.: ES-101.335-201-202-V4.4 Napájení/Power supply/Einspeinsung: 3x400V+PE, 50Hz Zpracoval/Processed /Hat verarbeitet: Datum/Date/Datum: 16.07.2019	List/Page/Seite: 5 Listů/Pages/Seiten: 24

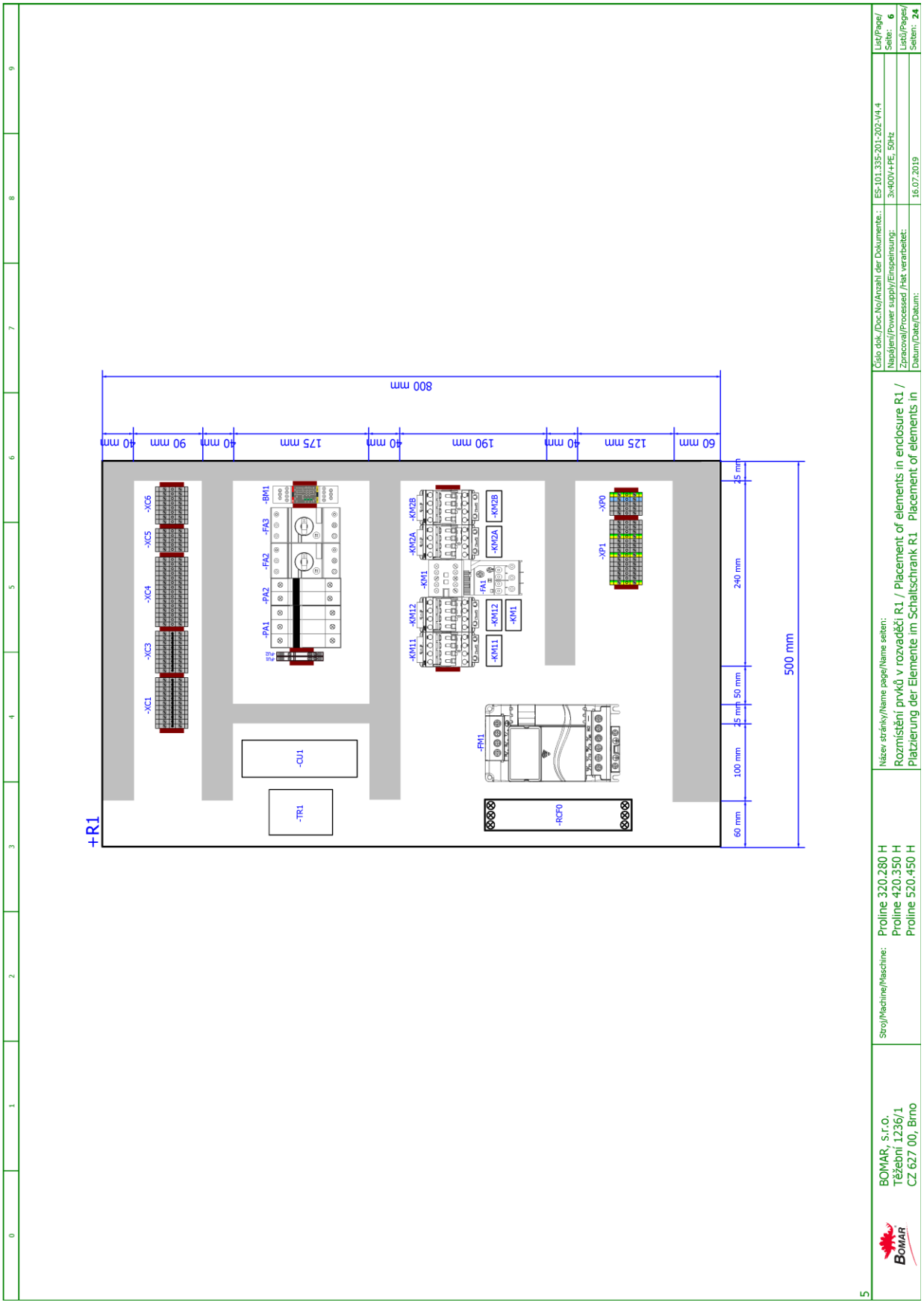
+R1
800 mm
40 mm
90 mm
40 mm
175 mm
40 mm
190 mm
40 mm
125 mm
60 mm
500 mm
25 mm
240 mm
50 mm
25 mm
100 mm
60 mm
-XC1
-XC3
-XC4
-XC5
-XC6
-PA1
-PA2
-FA2
-FA3
-BM1
-CU1
-TR1
-KM11
-KM12
-KM1
-KM2A
-KM2B
-FA1
-KM11
-KM12
-KM1
-KM2A
-KM2B
-XP1
-XP0
-FH1
-RCF0
5
BOMAR, s.r.o.
Těžební 1236/1
CZ 627 00, Brno
Stroj/Machine/Maschine:
Proline 320.280 H
Proline 420.350 H
Proline 520.450 H
Název stránky/Name page/Name seiten:
Rozmístění prvků v rozvaděči R1 / Placement of elements in enclosure R1 /
Platzierung der Elemente im Schaltschrank R1 Placement of elements in
Číslo dok./Doc.No/Anzahl der Dokumente.:
ES-101.335-201-202-V4.4
List/Page/
Seite: 6
Napájení/Power supply/Einspeinsung:
3x400V+PE, 50Hz
Listů/Pages/
Seiten: 24
Zpracoval/Processed /Hat verarbeitet:
Datum/Date/Datum:
16.07.2019

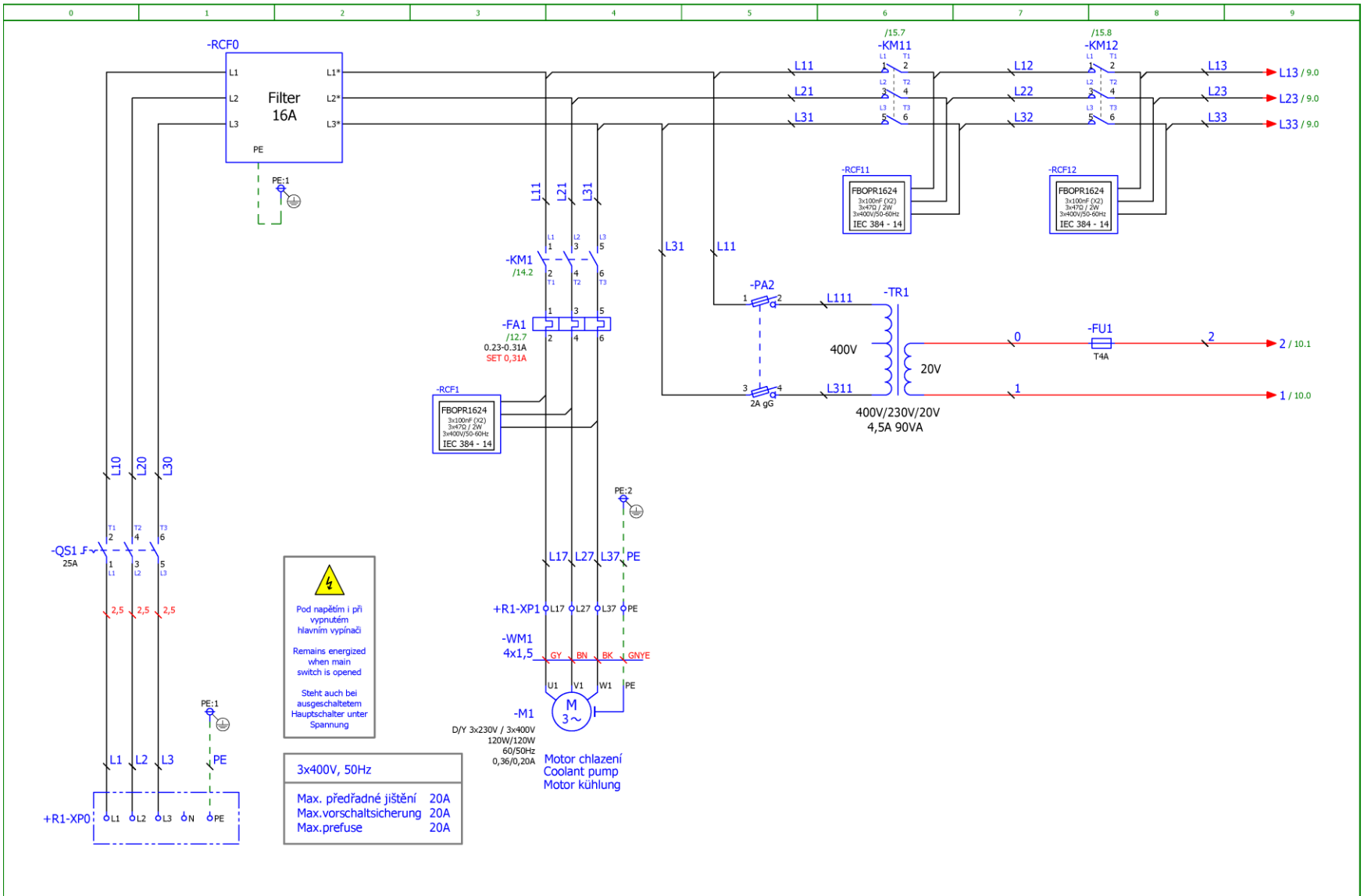

6

BOMAR, s.r.o. Těžební 1236/1 CZ 627 00, Brno	Stroj/Machine/Maschine: Proline 320.280 H Proline 420.350 H Proline 520.450 H	Název stránky/Name page/Name seiten: Silová část M1 / Power part M1 / Feld partie M1	Číslo dok./Doc.No/Anzahl der Dokumente.: ES-101.335-201-202-V4.4 Napájení/Power supply/Einspeinsung: 3x400V+PE, 50Hz Zpracoval/Processed /Hat verarbeitet: Datum/Date/Datum: 17.07.2019	List/Page/Seite: 7 Listů/Pages/Seiten: 24	

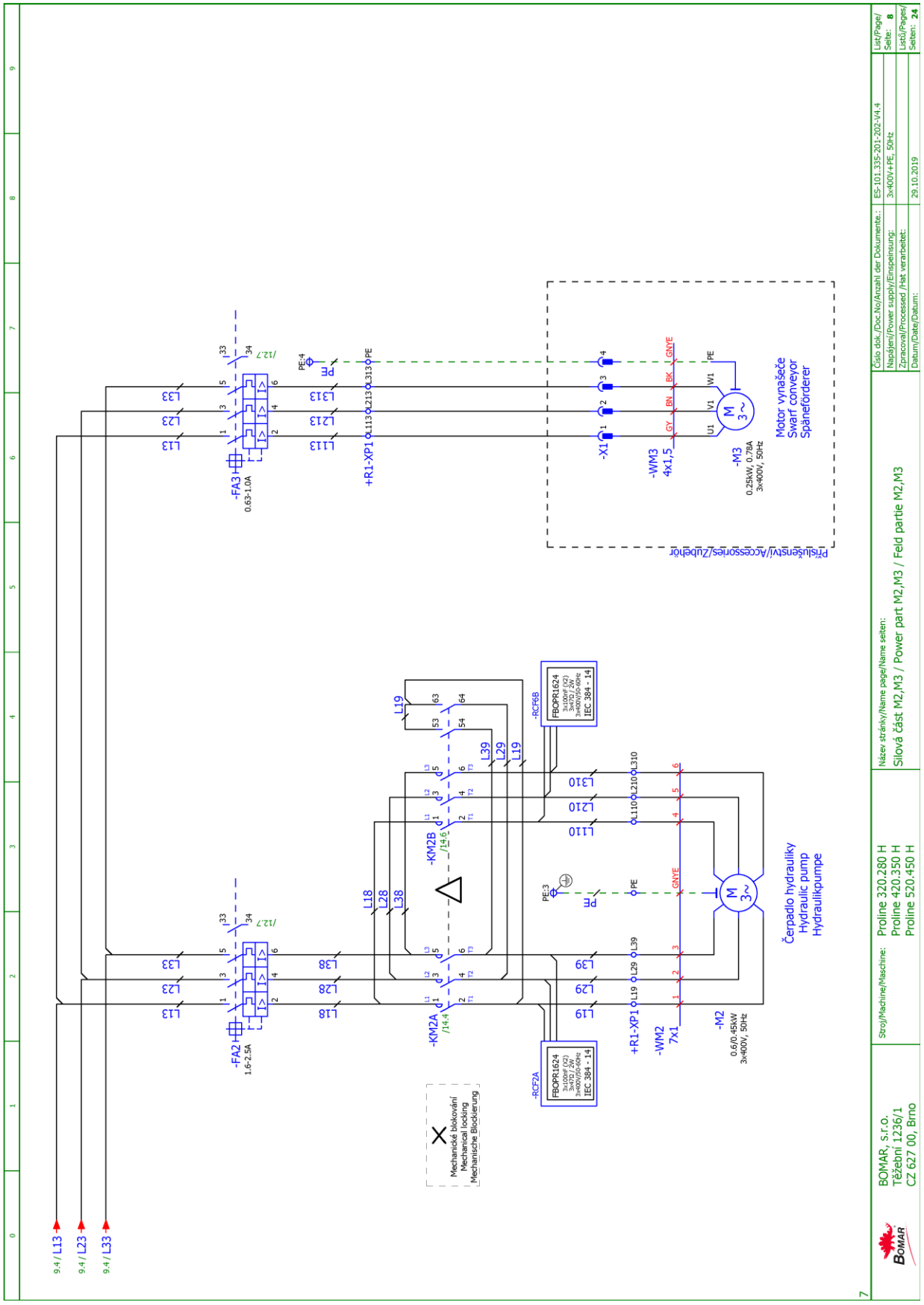
9.4 / L13
9.4 / L23
9.4 / L33
-FA2
1.6-2.5A
-FA3
0.63-1.0A
-KM2A
/14.4
-KM2B
/14.6
Mechanické blokování
Mechanical locking
Mechanische Blockierung
-RCF2A
-RCF6B
FBOPR1624
3x100nF (X2)
3x250V/20A
3x400V/50-60Hz
IEC 384 - 14
+R1-XP1
-WM2
7x1
-WM3
4x1,5
-X1
-M2
0.6/0.45kW
3x400V, 50Hz
-M3
0.25kW, 0.78A
3x400V, 50Hz
Čerpadlo hydrauliky
Hydraulic pump
Hydraulikpumpe
Motor vynašeče
Swarf conveyor
Späneförderer
Příslušenství/Accessories/Zubehör
Číslo dok./Doc.No/Anzahl der Dokumente.:
ES-101.335-201-202-V4.4
List/Page/Seite: 8
Listů/Pages/Seiten: 24
Napájení/Power supply/Einspeisung:
3x400V+PE, 50Hz
Zpracoval/Processed /Hat verarbeitet:
Datum/Date/Datum:
29.10.2019
Název stránky/Name page/Name seiten:
Silová část M2,M3 / Power part M2,M3 / Feld partie M2,M3
Stroj/Machine/Maschine:
Proline 320.280 H
Proline 420.350 H
Proline 520.450 H
BOMAR, s.r.o.
Těžební 1236/1
CZ 627 00, Brno

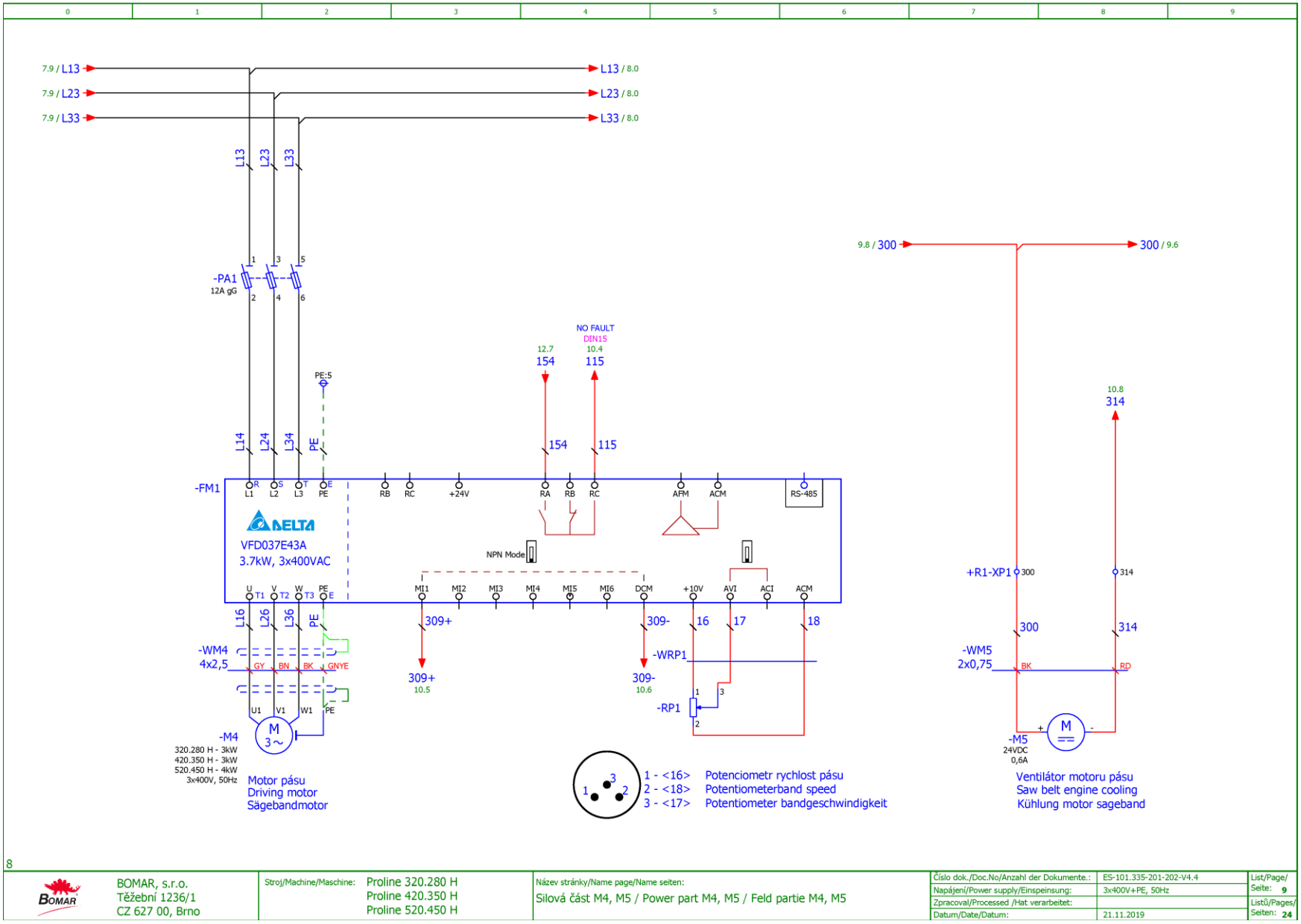
7.9 / L13
7.9 / L23
7.9 / L33
L13 / 8.0
L23 / 8.0
L33 / 8.0
L13
L23
L33
-PA1
12A gG
PE:5
L14
L24
L34
PE
-FM1
L1
L2
L3
PE
RB
RC
+24V
RA
RB
RC
AFM
ACM
RS-485
DELTA
VFD037E43A
3.7kW, 3x400VAC
NPN Mode
U
V
W
PE
T1
T2
T3
MI1
MI2
MI3
MI4
MI5
MI6
DCM
+10V
AVI
ACI
ACM
NO FAULT
DIN15
12.7
154
10.4
115
L16
L26
L36
-WM4
4x2,5
GY
BN
BK
GNYE
U1
V1
W1
-M4
320.280 H - 3kW
420.350 H - 3kW
520.450 H - 4kW
3x400V, 50Hz
Motor pásu
Driving motor
Sägebandmotor
309+
10.5
309-
10.6
-WRP1
-RP1
16
17
18
1 - <16> Potenciometr rychlost pásu
2 - <18> Potentiometerband speed
3 - <17> Potentiometer bandgeschwindigkeit
9.8 / 300
300 / 9.6
10.8
314
+R1-XP1
-WM5
2x0,75
BK
RD
-M5
24VDC
0,6A
Ventilátor motoru pásu
Saw belt engine cooling
Kühlung motor sageband
8
BOMAR, s.r.o.
Těžební 1236/1
CZ 627 00, Brno
Stroj/Machine/Maschine:
Proline 320.280 H
Proline 420.350 H
Proline 520.450 H
Název stránky/Name page/Name seiten:
Silová část M4, M5 / Power part M4, M5 / Feld partie M4, M5
Číslo dok./Doc.No/Anzahl der Dokumente.:
ES-101.335-201-202-V4.4
Napájení/Power supply/Einspeisung:
3x400V+PE, 50Hz
Zpracoval/Processed /Hat verarbeitet:
Datum/Date/Datum:
21.11.2019
List/Page/Seite: 9
Listů/Pages/Seiten: 24

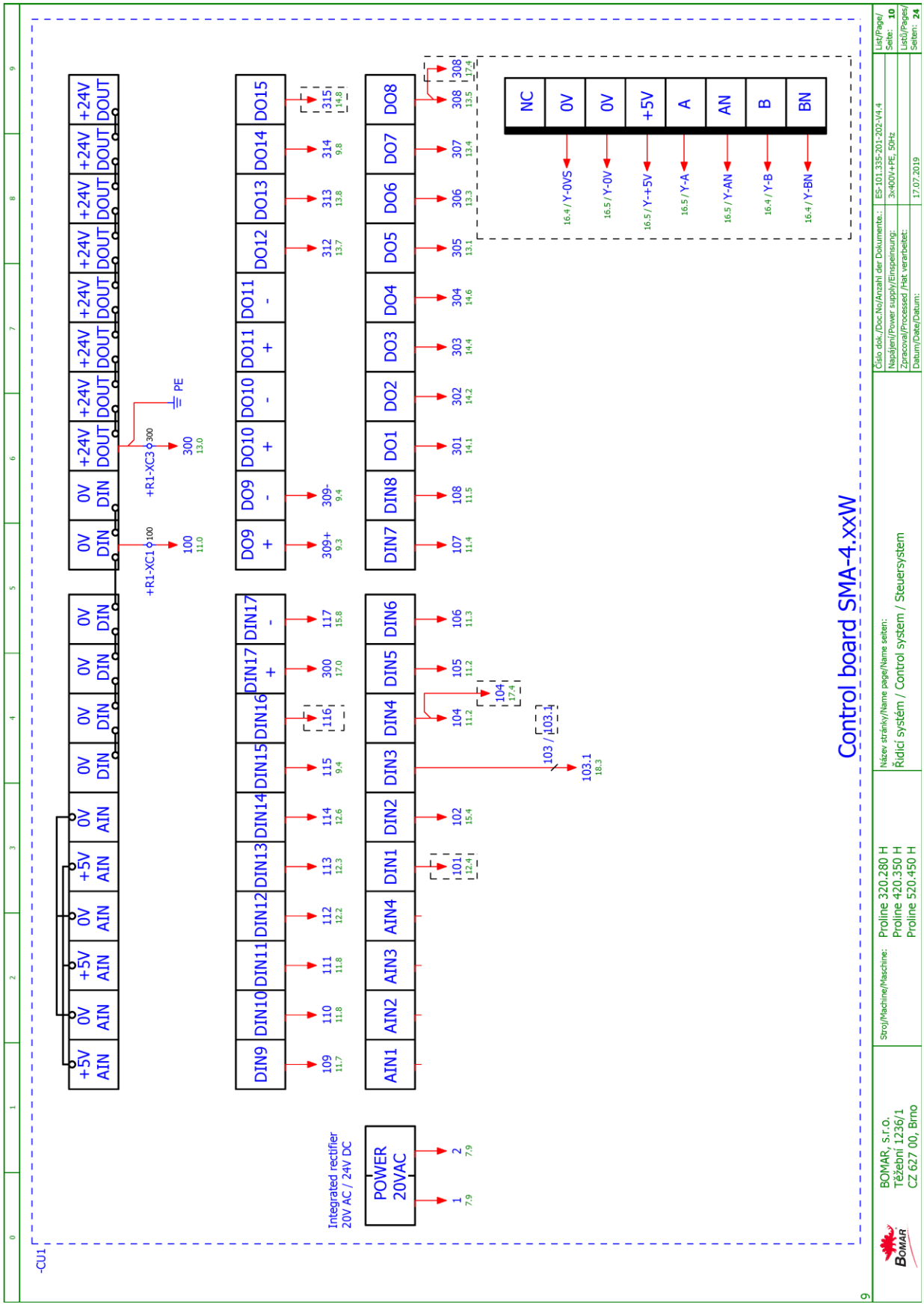
Control board SMA-4.xxW
-CU1
POWER 20VAC
Integrated rectifier 20V AC / 24V DC
AIN1 AIN2 AIN3 AIN4 DIN1 DIN2 DIN3 DIN4 DIN5 DIN6 DIN7 DIN8 DO1 DO2 DO3 DO4 DO5 DO6 DO7 DO8
DIN9 DIN10 DIN11 DIN12 DIN13 DIN14 DIN15 DIN16 DIN17 DO9 DO10 DO11 DO12 DO13 DO14 DO15
+5V AIN 0V AIN +5V AIN 0V AIN +5V AIN 0V AIN 0V DIN 0V DIN 0V DIN 0V DIN 0V DIN 0V DIN +24V DOUT
NC 0V 0V +5V A AN B BN
16.4 / Y-0VS 16.5 / Y-0V 16.5 / Y+5V 16.5 / Y-A 16.5 / Y-AN 16.4 / Y-B 16.4 / Y-BN
+R1-XC1 100
+R1-XC3 300
PE
BOMAR, s.r.o.
Těžební 1236/1
CZ 627 00, Brno
Stroj/Machine/Maschine:
Proline 320.280 H
Proline 420.350 H
Proline 520.450 H
Název stránky/Name page/Name seiten:
Řídicí systém / Control system / Steuersystem
Číslo dok./Doc.No/Anzahl der Dokumente.:
ES-101.335-201-202-V4.4
Napájení/Power supply/Einspeisung:
3x400V+PE, 50Hz
Zpracoval/Processed /Hat verarbeitet:
Datum/Date/Datum:
17.07.2019
List/Page/Seite: 10
Listů/Pages/Seiten: 24

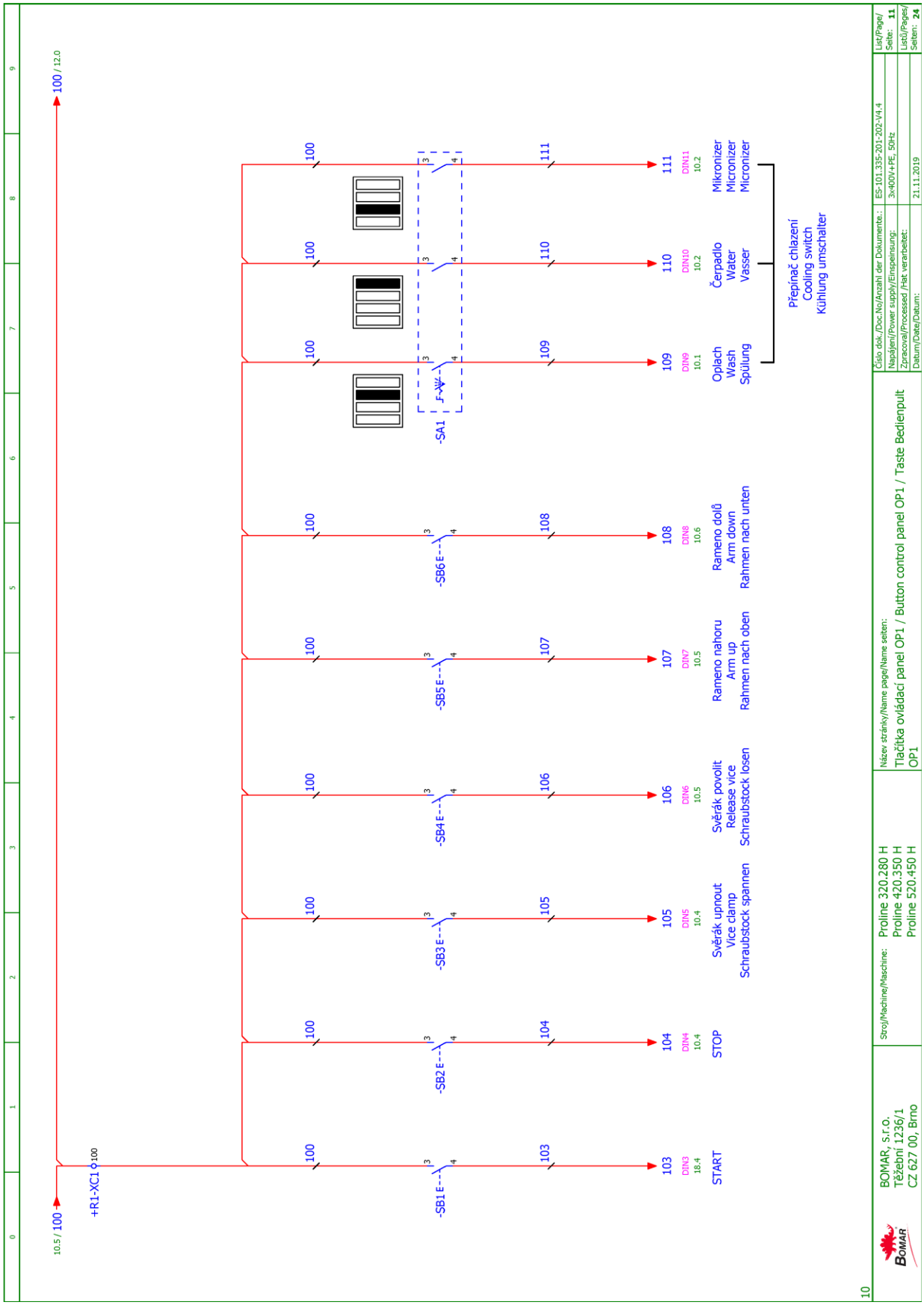

Schémata
Schemas
Schematics

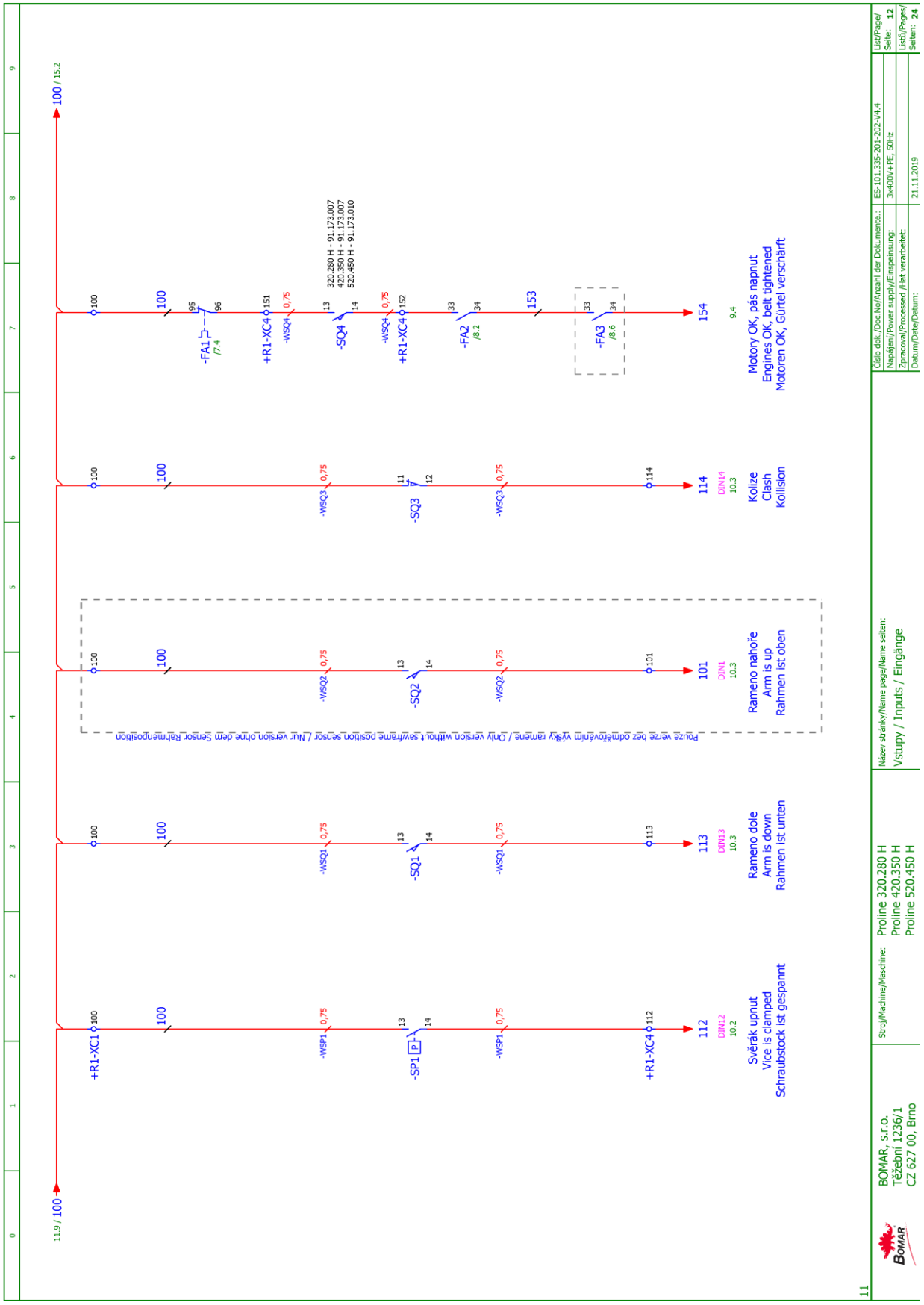
Svěrák upnut
Vice is clamped
Schraubstock ist gespannt
Rameno dole
Arm is down
Rahmen ist unten
Rameno nahoře
Arm is up
Rahmen ist oben
Kolize
Clash
Kollision
Motory OK, pás napnut
Engines OK, belt tightened
Motoren OK, Gürtel verschärft
BOMAR, s.r.o.
Těžební 1236/1
CZ 627 00, Brno
Proline 320.280 H
Proline 420.350 H
Proline 520.450 H
Vstupy / Inputs / Eingänge
ES-101.335-201-202-V4.4
3x400V+PE, 50Hz
21.11.2019

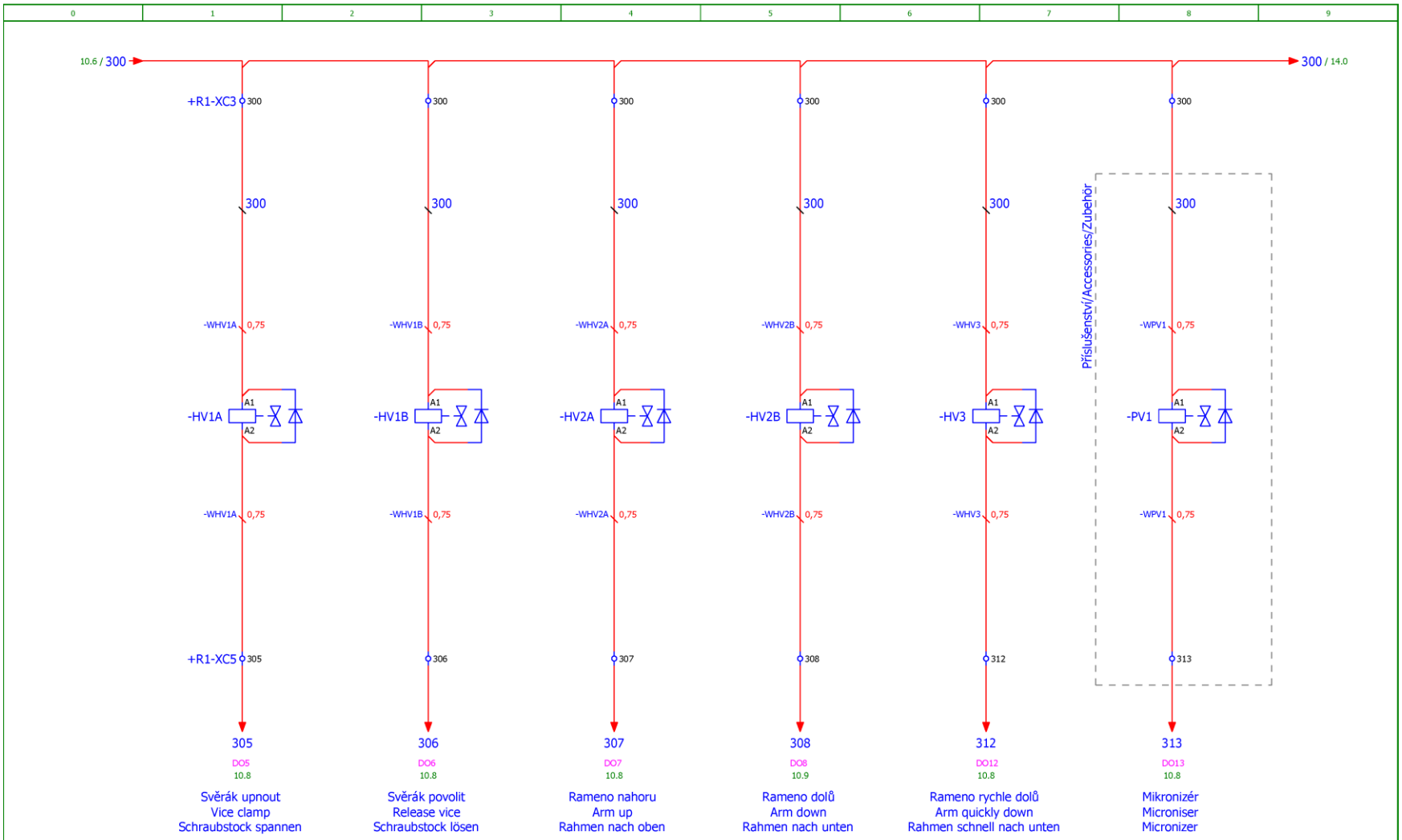

12

BOMAR, s.r.o. Těžební 1236/1 CZ 627 00, Brno	Stroj/Machine/Maschine: Proline 320.280 H Proline 420.350 H Proline 520.450 H	Název stránky/Name page/Name seiten: Hydraulické ventily / Hydraulic valves / Hydroventile	Číslo dok./Doc.No/Anzahl der Dokumente.:	ES-101.335-201-202-V4.4	List/Page/Seite: 13
			Napájení/Power supply/Einspeinsung:	3x400V+PE, 50Hz	Listů/Pages/Seiten: 24
			Zpracoval/Processed /Hat verarbeitet:		
			Datum/Date/Datum:	21.11.2019	

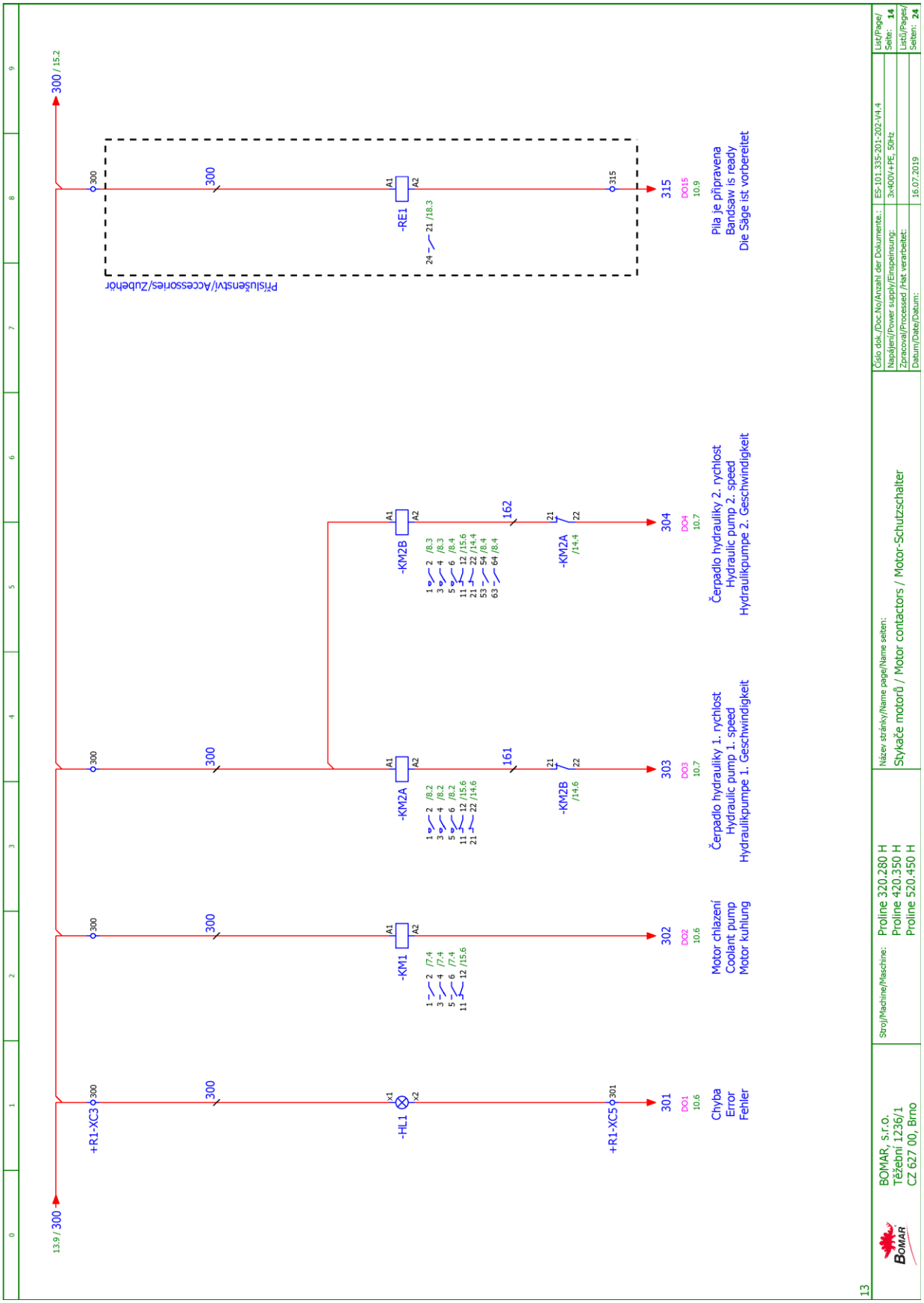
13.9 / 300
300 / 15.2
+R1-XC3
-HL1
Chyba
Error
Fehler
301
DO1
10.6
+R1-XC5
-KM1
Motor chlazení
Coolant pump
Motor kuhlung
302
DO2
10.6
-KM2A
Čerpadlo hydrauliky 1. rychlost
Hydraulic pump 1. speed
Hydraulikpumpe 1. Geschwindigkeit
303
DO3
10.7
-KM2B
Čerpadlo hydrauliky 2. rychlost
Hydraulic pump 2. speed
Hydraulikpumpe 2. Geschwindigkeit
304
DO4
10.7
-RE1
Příslušenství/Accessories/Zubehör
315
DO15
10.9
Pila je připravena
Bandsaw is ready
Die Säge ist vorbereitet
BOMAR, s.r.o.
Těžební 1236/1
CZ 627 00, Brno
Stroj/Machine/Maschine:
Proline 320.280 H
Proline 420.350 H
Proline 520.450 H
Název stránky/Name page/Name seiten:
Stykače motorů / Motor contactors / Motor-Schutzschalter
Číslo dok./Doc.No/Anzahl der Dokumente.:
ES-101.335-202-V4.4
List/Page/Seite: 14
Napájení/Power supply/Einspeisung:
3x400V+PE, 50Hz
Listů/Pages/Seiten: 24
Zpracoval/Processed /Hat verarbeitet:
Datum/Date/Datum:
16.07.2019
13

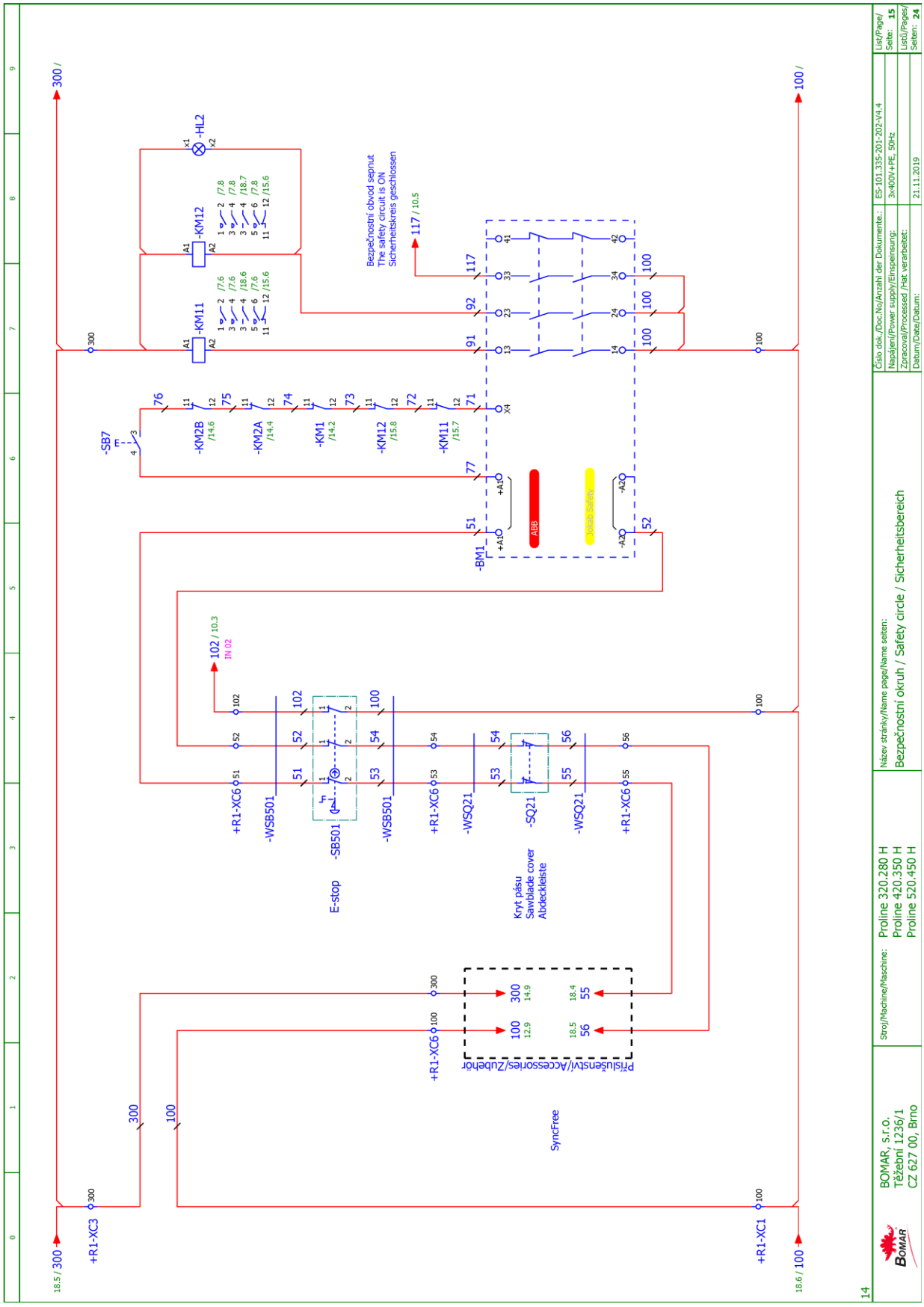
Bezpečnostní obvod sepnut
The safety circuit is ON
Sicherheitskreis geschlossen
E-stop
Kryt pásu
Sawblade cover
Abdeckleiste
Příslušenství/Accessories/Zubehör
SyncFree
Číslo dok./Doc.No/Anzahl der Dokumente: ES-101.335-201-202-V4.4
Napájení/Power supply/Einspeisung: 3x400V+PE, 50Hz
Zpracoval/Processed /Hat verarbeitet:
Datum/Date/Datum: 21.11.2019
List/Page/ Seite: 15
Listů/Pages/ Seiten: 24
Název stránky/Name page/Name seiten:
Bezpečnostní okruh / Safety circle / Sicherheitsbereich
Stroj/Machine/Maschine:
Proline 320.280 H
Proline 420.350 H
Proline 520.450 H
BOMAR, s.r.o.
Těžební 1236/1
CZ 627 00, Brno
14

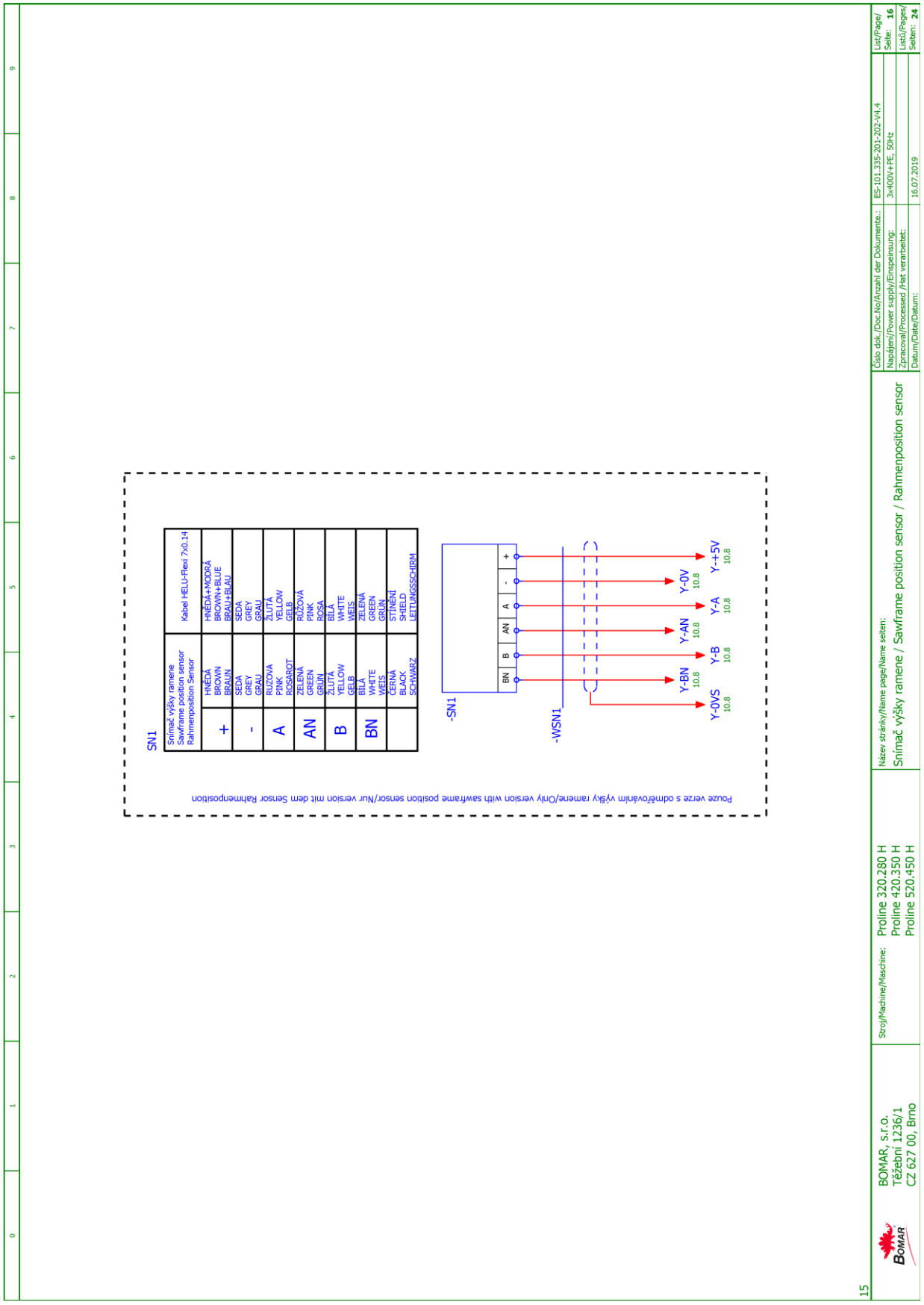
SN1
Snímač výšky ramene
Sawframe position sensor
Rahmenposition Sensor
Kabel HELU-Flexi 7x0.14
+ HNĚDÁ BROWN BRAUN HNĚDÁ+MODRÁ BROWN+BLUE BRAUN+BLAU
- SEDÁ GREY GRAU
A ŽLUTÁ YELLOW GELB
AN RŮŽOVÁ PINK ROSAROT
B BÍLÁ WHITE WEIS
BN ZELENÁ GREEN GRÜN
ZELENÁ GREEN GRÜN
ŽLUTÁ YELLOW GELB
BÍLÁ WHITE WEIS
ČERNÁ BLACK SCHWARZ
STÍNĚNÍ SHIELD LEITUNGSSCHIRM
-SN1
BN B AN A - +
-WSN1
Y-0VS 10.8
Y-BN 10.8
Y-B 10.8
Y-AN 10.8
Y-A 10.8
Y-0V 10.8
Y-+5V 10.8
Pouze verze s odměřováním výšky ramene/Only version with sawframe position sensor/Nur version mit dem Sensor Rahmenposition
BOMAR, s.r.o.
Těžební 1236/1
CZ 627 00, Brno
Stroj/Machine/Maschine:
Proline 320.280 H
Proline 420.350 H
Proline 520.450 H
Název stránky/Name page/Name seiten:
Snímač výšky ramene / Sawframe position sensor / Rahmenposition sensor
Číslo dok./Doc.No/Anzahl der Dokumente.:
ES-101.335-202-V4.4
Napájení/Power supply/Einspeisung:
3x400V+PE, 50Hz
Zpracoval/Processed /Hat verarbeitet:
Datum/Date/Datum:
16.07.2019
List/Page/
Seite: 16
Listů/Pages/
Seiten: 24
15

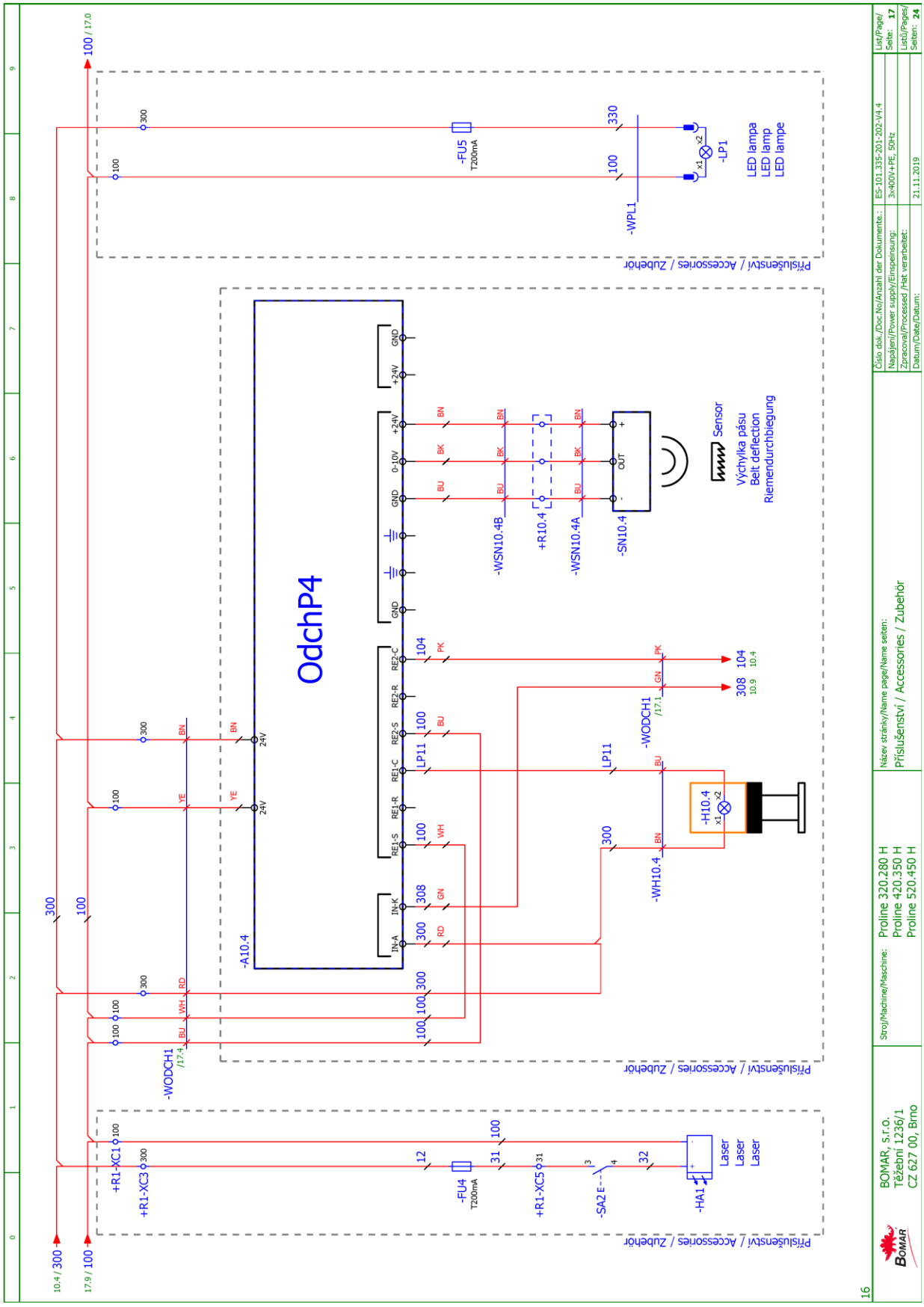

Schémata
Schemas
Schematics

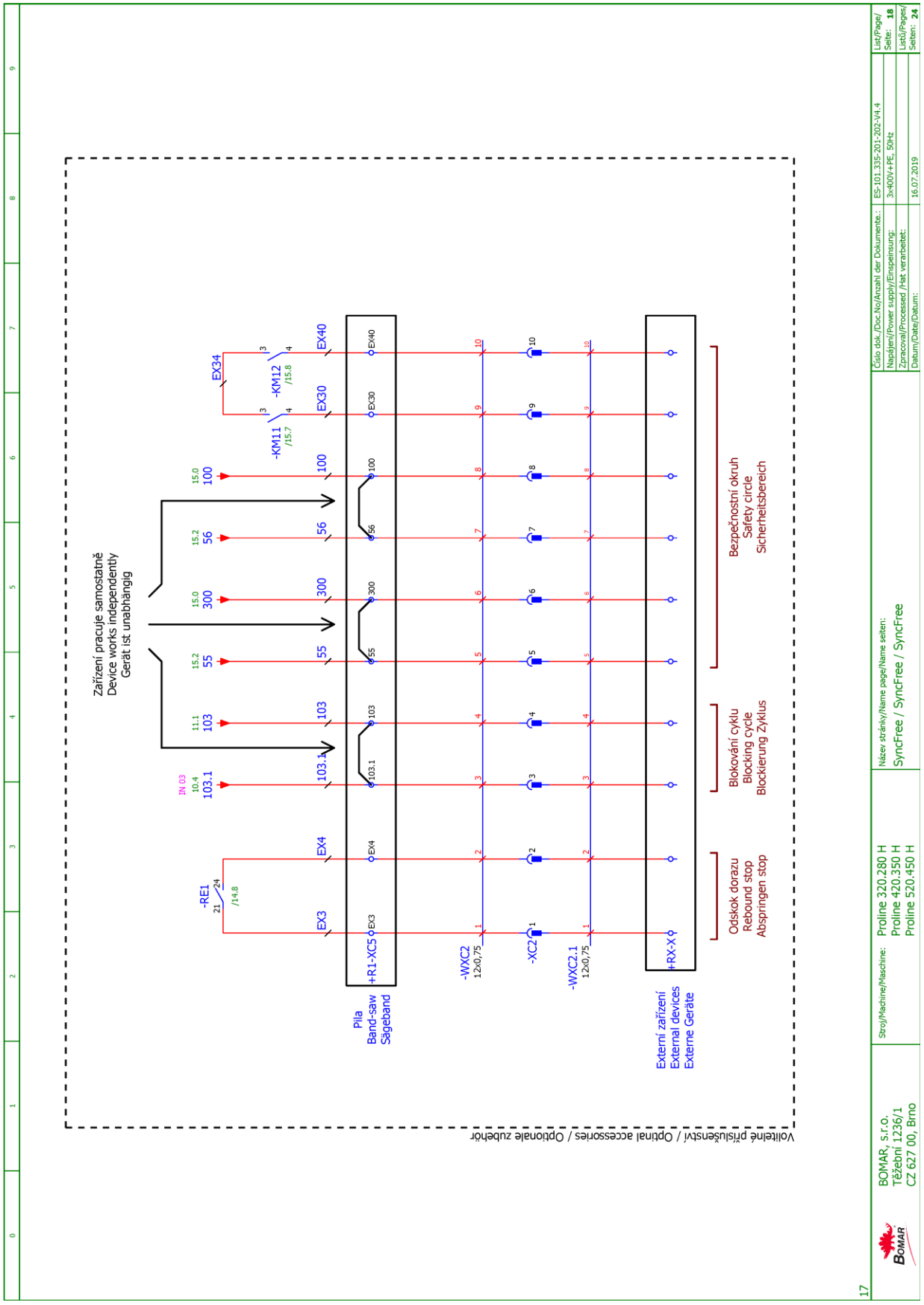
Zařízení pracuje samostatně
Device works independently
Gerät ist unabhängig
IN 03
10.4
103.1
11.1
103
15.2
55
15.0
300
15.2
56
15.0
100
-RE1
21
24
/14.8
EX3
EX4
103.1
103
55
300
56
100
-KM11
/15.7
-KM12
/15.8
EX34
EX30
EX40
Pila
Band-saw
Sägeband
+R1-XC5
-WXC2
12x0,75
-XC2
-WXC2.1
12x0,75
Externí zařízení
External devices
Externe Geräte
+RX-X
Odskok dorazu
Rebound stop
Abspringen stop
Blokování cyklu
Blocking cycle
Blockierung Zyklus
Bezpečnostní okruh
Safety circle
Sicherheitsbereich
Volitelné příslušenství / Optional accessories / Optionale zubehör
BOMAR, s.r.o.
Těžební 1236/1
CZ 627 00, Brno
Stroj/Machine/Maschine:
Proline 320.280 H
Proline 420.350 H
Proline 520.450 H
Název stránky/Name page/Name seiten:
SyncFree / SyncFree / SyncFree
Číslo dok./Doc.No/Anzahl der Dokumente.:
ES-101.335-202-V4.4
Napájení/Power supply/Einspeisung:
3x400V+PE, 50Hz
Zpracoval/Processed /Hat verarbeitet:
Datum/Date/Datum:
16.07.2019
List/Page/
Seite: 18
Listů/Pages/
Seiten: 24
17

6.1.2. 3×230 V + PE, 50 Hz

Obsah / Table of contents / Inhalt

Strana Page Seite	Název strany Page name Seitenname	Datum Date Datum
/1	Úvodní strana / Start page / Startseite	17.07.2019
/2	Obsah / Table of contents / Inhaltsverzeichnis	21.11.2019
/3	Kusovník artiklů / Parts list / Artikelstückliste	21.11.2019
/3.a	Kusovník artiklů / Parts list / Artikelstückliste	21.11.2019
/3.b	Kusovník artiklů / Parts list / Artikelstückliste	21.11.2019
/3.c	Kusovník artiklů / Parts list / Artikelstückliste	21.11.2019
/3.d	Kusovník artiklů / Parts list / Artikelstückliste	21.11.2019
/4	Rozmístění prvků v rozvaděči R1 / Placement of elements in enclosure R1 / Platzierung der Elemente im Schaltschrank R1	17.07.2019
/5	Rozmístění hydraulických ventilů / Placement of Hydraulic valves / Platzierung die Hydroventile	17.07.2019
/6	Ovládací panel OP1 / Control panel OP1 / Bedienpult OP1	17.07.2019
/7	Silová část M1 / Power part M1 / Feld partie M1	11.10.2019
/8	Silová část M2, M3 / Power part M2, M3 / Feld partie M2, M3	29.10.2019
/9	Silová část M4, M5 / Power part M4, M5 / Feld partie M4, M5	11.10.2019
/10	Řidicí systém / Control system / Steuersystem	21.11.2019
/11	Tlačítka ovládací panel OP1 / Button control panel OP1 / Taste Bedienpult OP1	21.11.2019
/12	Vstupy / Inputs / Eingänge	21.11.2019
/13	Hydraulické ventily / Hydraulic valves / Hydroventile	17.07.2019
/14	Stykače motorů / Motor contactors / Motor-Schutzschalter	17.07.2019
/15	Bezpečnostní okruh / Safety circle / Sicherheitsbereich	21.11.2019
/16	Snímač výšky ramene / Sawframe position sensor / Rahmenposition sensor	17.07.2019
/17	Příslušenství / Accessories / Zubehör	17.07.2019
/18	SyncFree / SyncFree / SyncFree	17.07.2019

Kusovník artiklů / Parts list / Stückliste

Označení přístroje Device identification Geräteidentifikation	Typ přístroje Device description Gerätebeschreibung	Objednací číslo Type number Typennummer	Výrobce Manufacturer Hersteller	Skladové číslo Part number Lagernummer	Množství Quantity Menge	Umístění Location Stelle
-BM1	Bezpečnostní relé 24VDC, 3NO Safety relay 24VDC, 3NO Sicherheitsrelais 24VDC, 3NO	BT50	ABB	91.051.063	1	/15.5
-FA2	Pomocné kontakty - 1xNO+1xNC Auxiliary contacts - 1xNO+1xNC Hilfskontakte - 1xNO+1xNC	HKF1-11	ABB	91.046.002	1	/8.2
-FA3	Pomocné kontakty - 1xNO+1xNC Auxiliary contacts - 1xNO+1xNC Hilfskontakte - 1xNO+1xNC	HKF1-11	ABB	91.046.002	1	/8.6
-HL1	Signálka LED červená na adaptér Red LED light for adapter Red LED-Licht für Adapter	M22-LED-R	EATON	91.061.027	1	/14.1
-KM2A	Stykač - 4kW/400V, 3P Contactor - 4kW/400V, 3P Schütz - 4 kW / 400V, 3P	AF09-30-01-11	ABB	91.040.047	1	/14.4
-KM2A	Mechanické blokování Mechanical interlock unit Mechanische Interlockeinheit	VM4	ABB	91.041.045	1	/14.4
-KM2B	Stykač - 4kW/400V, 3P Contactor - 4kW/400V, 3P Schütz - 4 kW / 400V, 3P	AF09-30-01-11	ABB	91.040.047	1	/14.5
-KM2B	Pomocný kontakt - 1xNO Auxiliary contact - 1xNO Hilfskontakt - 1xNO	CA4-10	ABB	91.041.044	2	/14.5
-SA1	Hlavice s otočným přepínačem - 4 polohy Head with rotary switch - 4 positions Kopf mit Drehschalter - 4 Positionen	M22 - WRK4	EATON	91.060.087	1	/11.7
-FU1	Pojistka trubičková - 4A/250V, pomalá, 5x20 Tube fuse - 4A/250V, slow, 5x20 Rohrsicherung - 4A / 250V, langsam, 5x20	T4A/250V	ESKA	91.230.015	1	/7.8
-RP1	Potenciometr 4k7 Potenciometer 4k7 Potentiometer 4k7	TP195 4k7/N20A	Elektronické součástky CZ, a.s	91.283.015	1	/9.5
-FA1	Tepelné relé - 0.74A Thermal relay - 0.74A Thermische Relais - 0.74A	T16-0,74	ABB	91.050.021	1	/7.4

The manufacturer reserves right to use an equivalent replacement device.

2

Kusovník artiklů / Parts list / Stückliste

Označení přístroje Device identification Geräteidentifikation	Typ přístroje Device description Gerätebeschreibung	Objednací číslo Type number Typennummer	Výrobce Manufacturer Hersteller	Skladové číslo Part number Lagernummer	Množství Quantity Menge	Umístění Location Stelle
-RP1	Hlavice potenciometru - 24mm Head of potentiometer 24mm Leiter Potentiometer 24mm	S8877 BLK	GES-ELECTRONICS, a.s.	91.060.063	1	/9.5
-RCF1	Filtr RFC vývodový Efferent RFC filter Ableitenden RFC Filter	FBOPR1624	Ing. Miroslav Vlček	91.041.015	1	/7.3
-RCF2A	Filtr RFC vývodový Efferent RFC filter Ableitenden RFC Filter	FBOPR1624	Ing. Miroslav Vlček	91.041.015	1	/8.1
-RCF6B	Filtr RFC vývodový Efferent RFC filter Ableitenden RFC Filter	FBOPR1624	Ing. Miroslav Vlček	91.041.015	1	/8.4
-RCF11	Filtr RFC vývodový Efferent RFC filter Ableitenden RFC Filter	FBOPR1624	Ing. Miroslav Vlček	91.041.015	1	/7.6
-RCF12	Filtr RFC vývodový Efferent RFC filter Ableitenden RFC Filter	FBOPR1624	Ing. Miroslav Vlček	91.041.015	1	/7.7
-FA2	Motorový spouštěč - 2.5A Motor starter - 2.5A Motorstarter - 2.5A	MS116-2,5	ABB	91.045.021	1	/8.2
-FA3	Motorový spouštěč - 1.6A Motor starter - 1.6A Motorstarter - 1.6A	MS116-1,6	ABB	91.045.020	1	/8.6
-KM1	Ministykač - 4kW/400V, 3P Mini contactor - 4kW/400V, 3P Mini-Schütz - 4kW / 400V, 3P	B6S-30-01-1.7-71	ABB	91.040.049	1	/14.2
-KM2A	Pomocný kontakt - 1xNC Auxiliary contact - 1xNC Hilfskontakt - 1 xNC	CA4-01	ABB	91.041.043	1	/14.4
-KM2B	Pomocný kontakt - 1xNC Auxiliary contact - 1xNC Hilfskontakt - 1 xNC	CA4-01	ABB	91.041.043	1	/14.5
-KM11	Stykač - 5,5kW/400V, 3P Contactor - 5,5kW/400V, 3P Schütz - 5,5kW / 400V, 3P	AF12-30-01-11	ABB	91.040.051	1	/15.7

The manufacturer reserves right to use an equivalent replacement device.

3

Kusovník artiklů / Parts list / Stückliste

Označení přístroje Device identification Geräteidentifikation	Typ přístroje Device description Gerätebeschreibung	Objednací číslo Type number Typennummer	Výrobce Manufacturer Hersteller	Skladové číslo Part number Lagernummer	Množství Quantity Menge	Umístění Location Stelle
-KM12	Stykač - 5,5kW/400V, 3P Contactor - 5,5kW/400V, 3P Schütz - 5,5kW / 400V, 3P	AF12-30-01-11	ABB	91.040.051	1	/15.8
-PA1	Pojistkový odpojovač E-90 - 2P Fuse disconnector E-90 - 2P Sicherungstrenner E90 - 2P	E 92/32	ABB	91.241.013	1	/7.5
-RP1	Svorka rychloupínací Fastconnect clamp Fast Connect Klemm	WAGO 224-112	WAGO	91.250.009	3	/9.5
-SA1	Upevňovací adaptér + 1NO Attaching adapter + 1NO Montageadapter + 1NO	M22-AK10	EATON	91.061.021	1	/11.7
-SA1	Kontaktní blok - 1NO Contact block - 1NO Kontaktblock - 1NO	M22-K10	EATON	91.061.022	2	/11.7
-SB1	Hlavice dvoutlačítka bílá/černá start/stop Double button head white/black start/stop Doppelrundkopf weiß/schwarz Start/Stopp	M22-DDL-WS-GB1/GB0	EATON	91.060.034	1	/11.1
-SB1	Upevňovací adaptér + 1NO Attaching adapter + 1NO Montageadapter + 1NO	M22-AK10	EATON	91.061.021	1	/11.1
-SB2	Kontaktní blok - 1NO Contact block - 1NO Kontaktblock - 1NO	M22-K10	EATON	91.061.022	1	/11.1
-SB3	Upevňovací adaptér + 1NO Attaching adapter + 1NO Montageadapter + 1NO	M22-AK10	EATON	91.061.021	1	/11.2
-SB3	Hlavice dvoutlačítka bílá/černá, zavřít/otevřít Double button head white/black, arrow close/open Doppelrundkopf weiß / schwarz, Pfeil Schließen / Öffnen	M22-DDL-WS-*	EATON	91.060.055	1	/11.2
-SB4	Kontaktní blok - 1NO Contact block - 1NO Kontaktblock - 1NO	M22-K10	EATON	91.061.022	1	/11.3
-SB5	Upevňovací adaptér + 1NO Attaching adapter + 1NO Montageadapter + 1NO	M22-AK10	EATON	91.061.021	1	/11.4

The manufacturer reserves right to use an equivalent replacement device.

Kusovník artiklů / Parts list / Stückliste

Označení přístroje Device identification Geräteidentifikation	Typ přístroje Device description Gerätebeschreibung	Objednací číslo Type number Typennummer	Výrobce Manufacturer Hersteller	Skladové číslo Part number Lagernummer	Množství Quantity Menge	Umístění Location Stelle
-SB5	Hlavice dvoutlačítka bílá/černá šipka nahoru/dolů Double button head white/black, arrow up/down Doppelrundkopf weiß / schwarz, Pfeil nach oben / unten	M22-DDL-WS-*-*	EATON	91.060.054	1	/11.4
-SB6	Kontaktní blok - 1NO Contact block - 1NO Kontaktblock - 1NO	M22-K10	EATON	91.061.022	1	/11.5
-SB7	Upevňovací adaptér + 1NO Attaching adapter + 1NO Montageadapter + 1NO	M22-AK10	EATON	91.061.021	1	/15.6
-SB7	Hlavice prosvětleného tlačítka žlutá Yellow trasparent switch Leiter beleuchtet gelbe Taste	M22-DL-Y	EATON	91.060.053	1	/15.6
-SB501	Total stop - hlavice + 3xNC Emergency-stop mushroom push - button + 3xNC Not-Aus-Pilz - Taster + 3 xNC	YW1B-V4E02R	IDEC	91.060.084	1	/15.4
-SB501	Kontakt - 1x NO Contact - 1x NO Kontakt - 1x NO	YW-E10	IDEC	91.061.044	1	/15.4
-TR1	Toroidní transformátor - 400V/230V/20V 4,5A 90VA Toroidal transformer - 400V / 230V / 20V 4,5A 90VA Ringkerntransformator - 400V / 230V / 20V 4,5A 90VA	400V/230V/20V 4,5A 90VA	KARBAN s.r.o.	91.080.023	1	/7.6
-SQ21	Bezpečnostní koncový spínač - 2xNC Safety Limit Switch - 2x NC Sicherheitsendschalter - 2x NC	QKS8	KEDU	91.173.012	1	/15.4
-PA1	Pojistka válcová - 2A, 10x38, pomalá Tube fuse - 2A, 10x38, slow Rohrsicherung - 2A, 10x38, langsam	PV10 2A gG	OEZ	91.230.034	2	/7.5
-PA2	Pojistkový odpínač pro válcové vložky - 3P Switch fuse for the cylinder inserts - 3P Schalter Sicherung für den Zylindereinsätze - 3P	E 93/32	ABB	91.241.014	1	/9.1
-PA2	Pojistka válcová - 25A, 10x38, rychlá Tube fuse - 25A, 10x38, fast Rohrsicherung - 25A, 10x38, schnell	PV10 25A gG	OEZ	91.230.021	1	/9.1
-SQ4	Koncový spínač - 1NC+1NO Limit switch - 1NC+1NO Endschalter - 1NC+1NO	D4N-4A31	OMRON	91.173.007	1	/12.7

The manufacturer reserves right to use an equivalent replacement device.

3.b

Kusovník artiklů / Parts list / Stückliste

Označení přístroje Device identification Geräteidentifikation	Typ přístroje Device description Gerätebeschreibung	Objednací číslo Type number Typennummer	Výrobce Manufacturer Hersteller	Skladové číslo Part number Lagernummer	Množství Quantity Menge	Umístění Location Stelle
-SQ4	Koncový spínač - 1NC+1NO, M20, pomalý Limit switch - 1NC+1NO, M20, slow Endschalter -1NC+1NO, M20, langsam	D4N-4A32	OMRON	91.173.010	1	/12.7
-SQ1	Koncový spínač - 1NO + 1NC, kladka, pomalá akce Limit switch - 1NO + 1NC, pulley, slow action Endschalter - 1NO + 1NC, rolle, langsame Einwirkung	FR 605-M2	PIZZATO	91.173.009	1	/12.3
-SQ2	Koncový spínač - 1NO + 1NC, kladka, pomalá akce Limit switch - 1NO + 1NC, pulley, slow action Endschalter - 1NO + 1NC, rolle, langsame Einwirkung	FR 615-M2	PIZZATO	91.173.044	1	/12.4
-SQ3	Koncový spínač - 1NO + 1NC, dlouhá nastavitelná kladka, M2, snap action Limit switch - 1NO + 1NC, long adjustable pulley, M2, snap action Endschalter - 1NO + 1NC, lange verstellbare rolle, M2, schnapp	FR 655-M2	PIZZATO	91.173.045	1	/12.6
-FM1	Frekvenční měnič - 3.7kW, 3x230VAC Frequency converter - 3.7kW, 3x230VAC Frequenzumrichter - 3.7 kW, 3x230VAC	VFD037E23A	DELTA ELECTRONICS, INC.	91.012.090	1	/9.1
-QS1	3 pólový odpínač, 63A Disconnector - 3P, 63A Trennschalter - 3P, 63A	SAP63/03-M2	SALZER YUEQING LEYI	91.170.031	1	/7.0
-QS1	3 pólový odpínač, 16A Disconnector - 3P, 16A Trennschalter - 3P, 16A	SAP16-03-M2	SALZER YUEQING LEYI	91.170.029	1	/7.0
-M1	Čerpadlo chlazení 120W Cooling pump 120W Kühlpumpe 120W	PA70/120	SAP srl	91.020.032	1	/7.4
-RCF0	Odrušovací filtr 25A Noise filter 25A Rauschfilter 25A	25EB15/50/C2	WIDECOM TECHNOLOGY s.r.o.	91.041.063	1	/9.1
-FU1	Svorka pojistková Fuse terminal Sicherungsklemme	WK4/THSi5U	WIELAND	91.251.102	1	/7.8
-M5	Ventilátor 24VDC, 154CFM Fan 24VDC, 154CFM Fan 24VDC, 154CFM	RDH1238 B2	Xinruilian Electronic Co.	91.015.126	1	/9.8

The manufacturer reserves right to use an equivalent replacement device.

3.c

BOMAR, s.r.o. Těžební 1236/1 CZ 627 00, Brno	Stroj/Machine/Maschine: Proline 320.280 H Proline 420.350 H Proline 520.450 H	Název stránky/Name page/Name seiten: Kusovník artiklů / Parts list / Artikelstückliste	Číslo dok./Doc.No/Anzahl der Dokumente.: ES-101.335-203-V4.4 Napájení/Power supply/Einspeinsung: 3x230V+PE, 50Hz Zpracoval/Processed /Hat verarbeitet: Datum/Date/Datum: 21.11.2019	List/Page/Seite: 3.d Listů/Pages/Seiten: 22

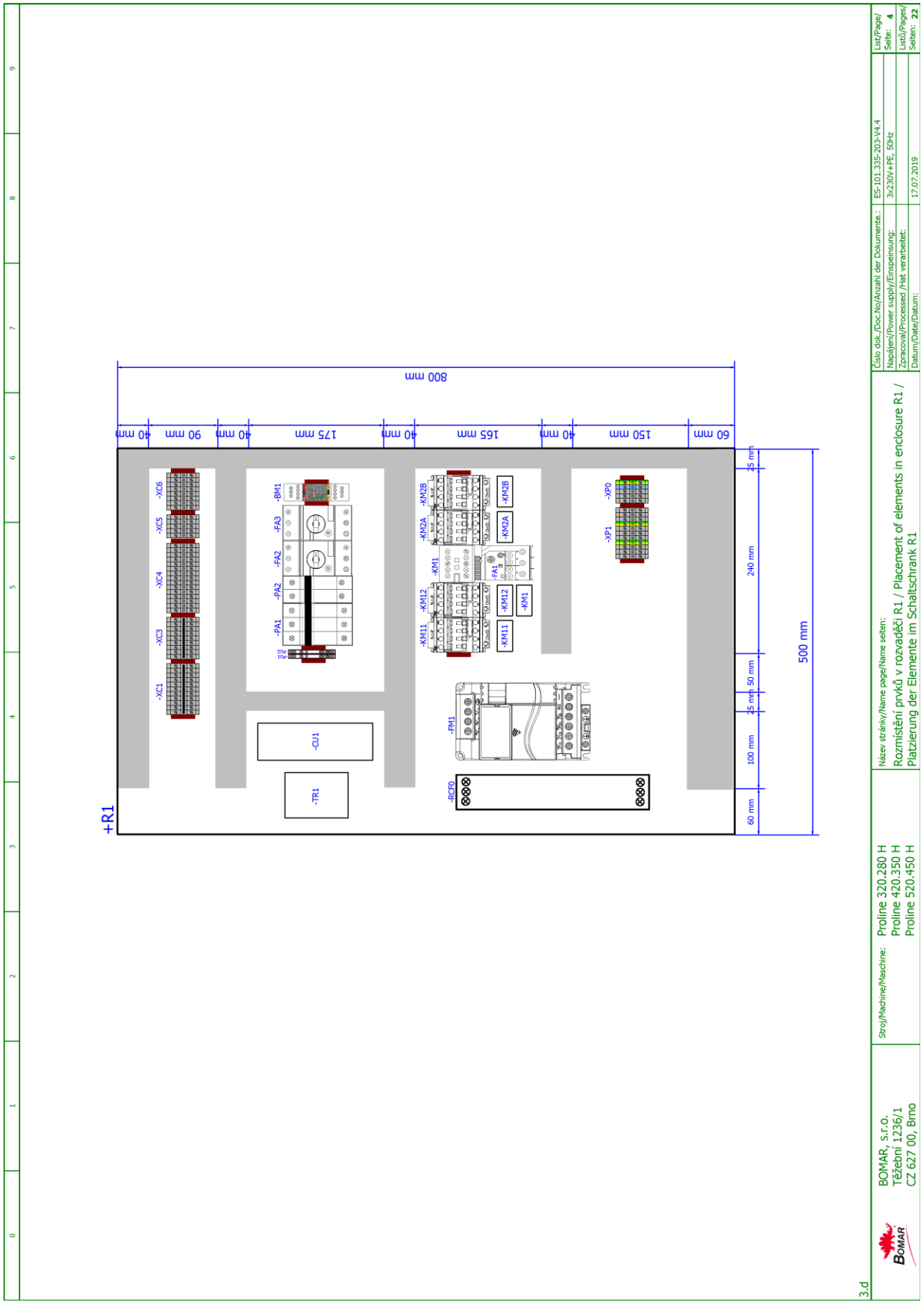
+R1
800 mm
40 mm
90 mm
40 mm
175 mm
40 mm
165 mm
40 mm
150 mm
60 mm
-XC1
-XC3
-XC4
-XC5
-XC6
-PA1
-PA2
-FA2
-FA3
-BM1
-QU1
-TR1
-FM1
-RCPO
-KM11
-KM12
-KM1
-KM2A
-KM2B
-FA1
-XP0
-XP1
500 mm
60 mm
100 mm
25 mm
50 mm
25 mm
240 mm
25 mm
3.d
BOMAR, s.r.o.
Těžební 1236/1
CZ 627 00, Brno
Stroj/Machine/Maschine:
Proline 320.280 H
Proline 420.350 H
Proline 520.450 H
Název stránky/Name page/Name seiten:
Rozmístění prvků v rozvaděči R1 / Placement of elements in enclosure R1 /
Platzierung der Elemente im Schaltschrank R1
Číslo dok./Doc.No/Anzahl der Dokumente.:
ES-101.335-203-V4.4
Napájení/Power supply/Einspeisung:
3x230V+PE, 50Hz
Zpracoval/Processed /Hat verarbeitet:
Datum/Date/Datum:
17.07.2019
List/Page/
Seite: 4
Listů/Pages/
Seiten: 22

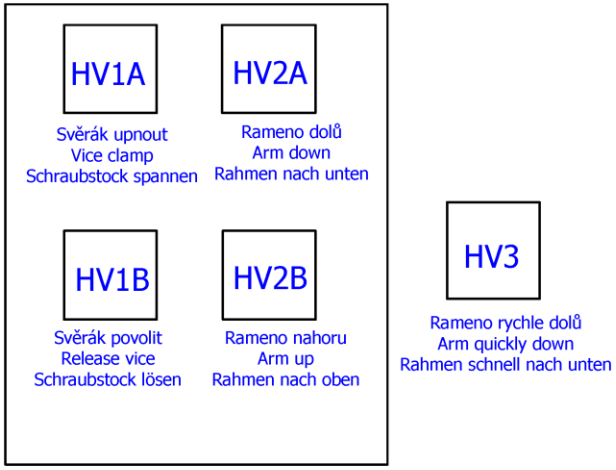

4

BOMAR, s.r.o. Těžební 1236/1 CZ 627 00, Brno	Stroj/Machine/Maschine: Proline 320.280 H Proline 420.350 H Proline 520.450 H	Název stránky/Name page/Name seiten: Rozmístění hydraulických ventilů / Placement of Hydraulic valves / Platzierung die Hydroventile	Číslo dok./Doc.No/Anzahl der Dokumente.: ES-101.335-203-V4.4 Napájení/Power supply/Einspeinsung: 3x230V+PE, 50Hz Zpracoval/Processed /Hat verarbeitet: Datum/Date/Datum: 17.07.2019	List/Page/Seite: 5 Listů/Pages/Seiten: 22	

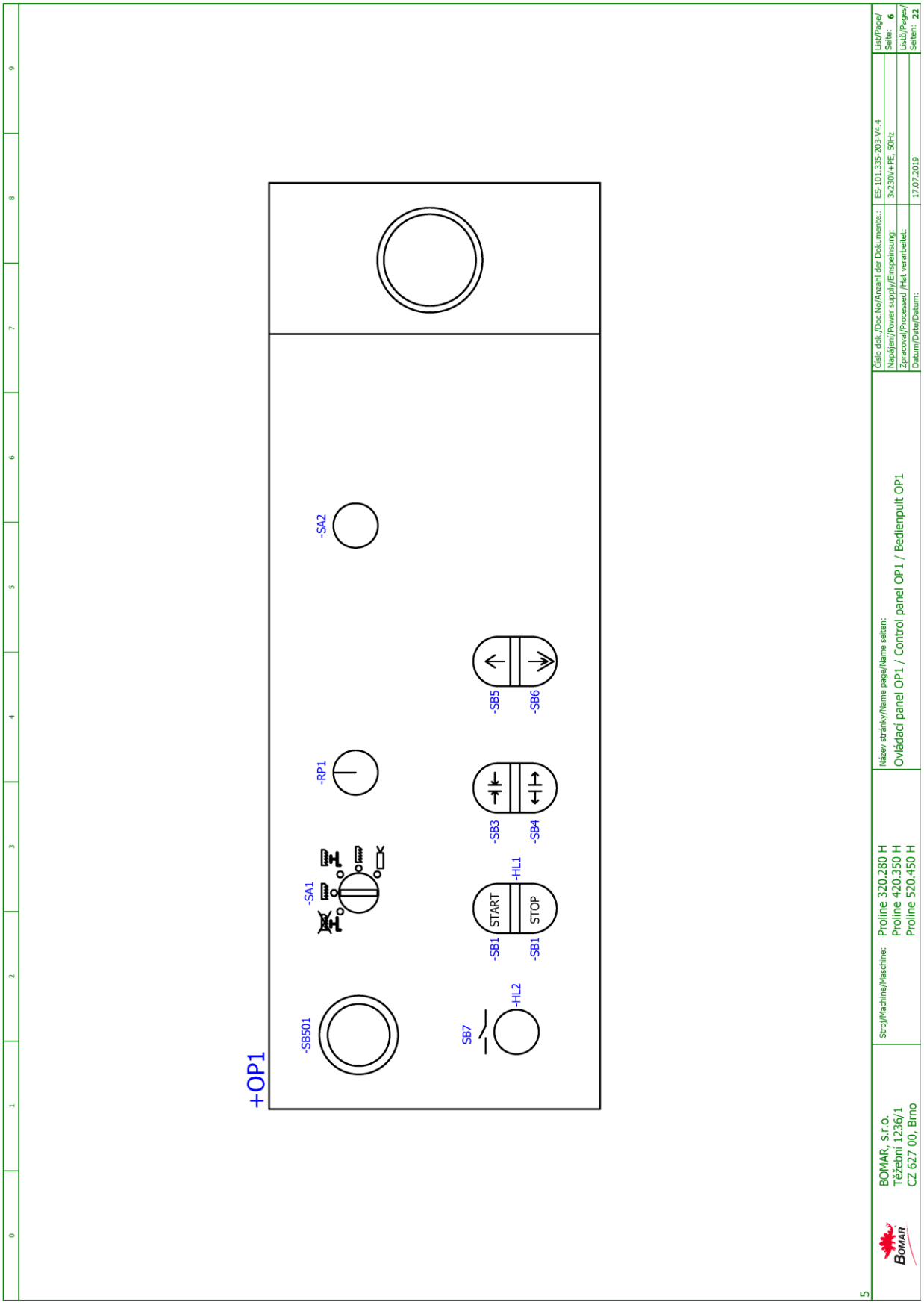
+OP1
-SB501
-SA1
-RP1
-SA2
SB7
-HL2
-SB1
START
STOP
-SB1
-HL1
-SB3
-SB4
-SB5
-SB6
BOMAR, S.r.o.
Těžební 1236/1
CZ 627 00, Brno
Stroj/Machine/Maschine:
Proline 320.280 H
Proline 420.350 H
Proline 520.450 H
Název stránky/Name page/Name seiten:
Ovládací panel OP1 / Control panel OP1 / Bedienpult OP1
Číslo dok./Doc.No/Anzahl der Dokumente.:
ES-101.335-203-V4.4
List/Page/
Seite: 6
Napájení/Power supply/Einspeisung:
3x230V+PE, 50Hz
Listů/Pages/
Seiten: 22
Zpracoval/Processed /Hat verarbeitet:
Datum/Date/Datum:
17.07.2019

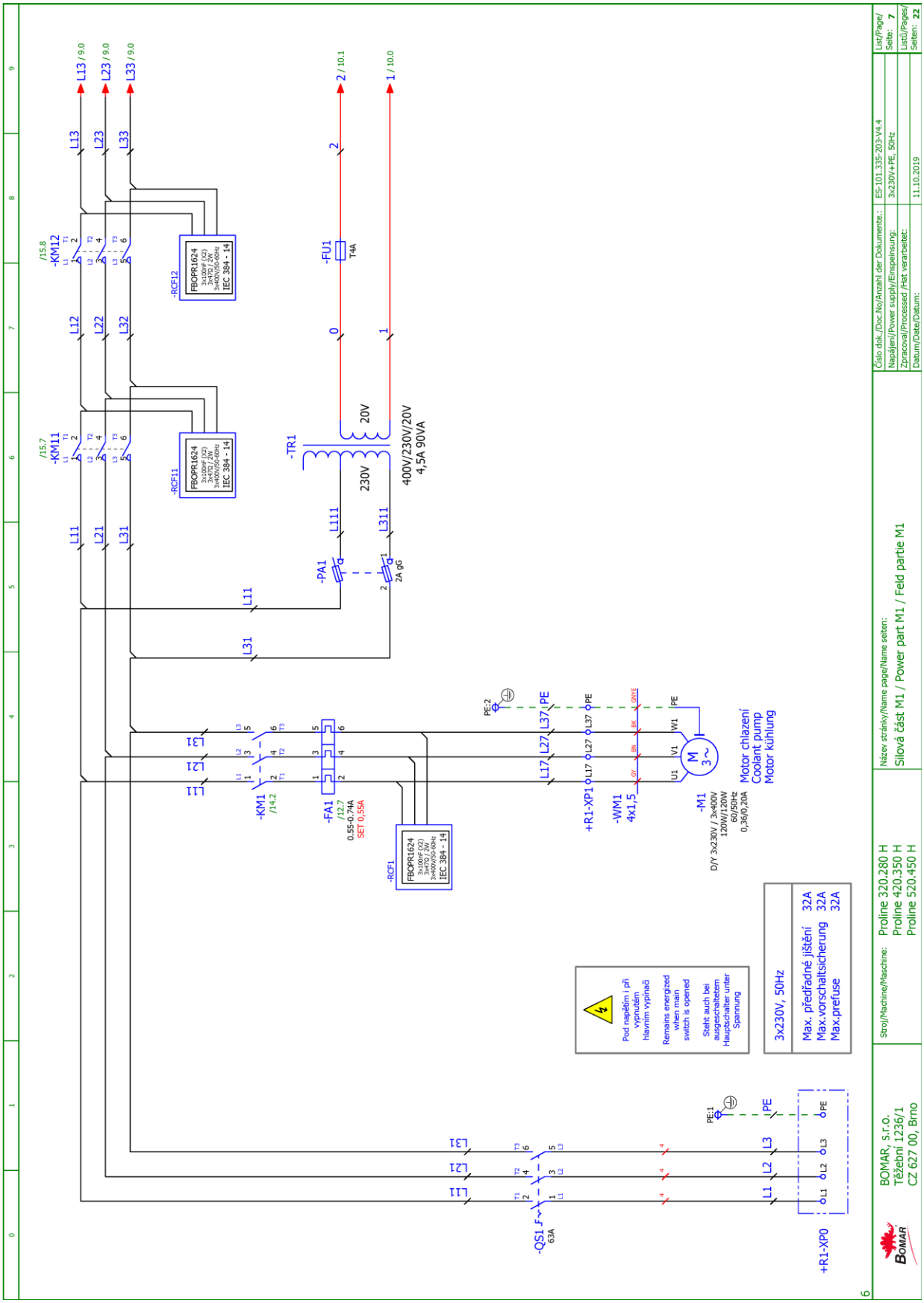
L13 / 9.0
L23 / 9.0
L33 / 9.0
2 / 10.1
1 / 10.0
/15.8
-KM12
/15.7
-KM11
-RCF12
-RCF11
FBOPR1624
3x100nF (X2)
3x470nF (Y2)
3x400V/50-60Hz
IEC 384 - 14
-FU1
T4A
-TR1
20V
230V
400V/230V/20V
4,5A 90VA
-PA1
2A gG
-KM1
/14.2
-FA1
/12.7
0.55-0.74A
SET 0,55A
-RCF1
PE:2
+R1-XP1
-WM1
4x1,5
-M1
D/Y 3x230V / 3x400V
120W/120W
60/50Hz
0,36/0,20A
Motor chlazení
Coolant pump
Motor Kühlung
Pod napětím i při vypnutém hlavním vypínači
Remains energized when main switch is opened
Steht auch bei ausgeschaltetem Hauptschalter unter Spannung
3x230V, 50Hz
Max. předřadné jištění 32A
Max.vorschaltsicherung 32A
Max.prefuse
PE:1
-QS1
63A
+R1-XP0
Číslo dok./Doc.No/Anzahl der Dokumente.: ES-101.335-203-V4.4
Napájení/Power supply/Einspeisung: 3x230V+PE, 50Hz
Zpracoval/Processed /Hat verarbeitet:
Datum/Date/Datum: 11.10.2019
List/Page/Seite: 7
Listů/Pages/Seiten: 22
Název stránky/Name page/Name seiten:
Silová část M1 / Power part M1 / Feld partie M1
Stroj/Machine/Maschine: Proline 320.280 H
Proline 420.350 H
Proline 520.450 H
BOMAR, s.r.o.
Těžební 1236/1
CZ 627 00, Brno

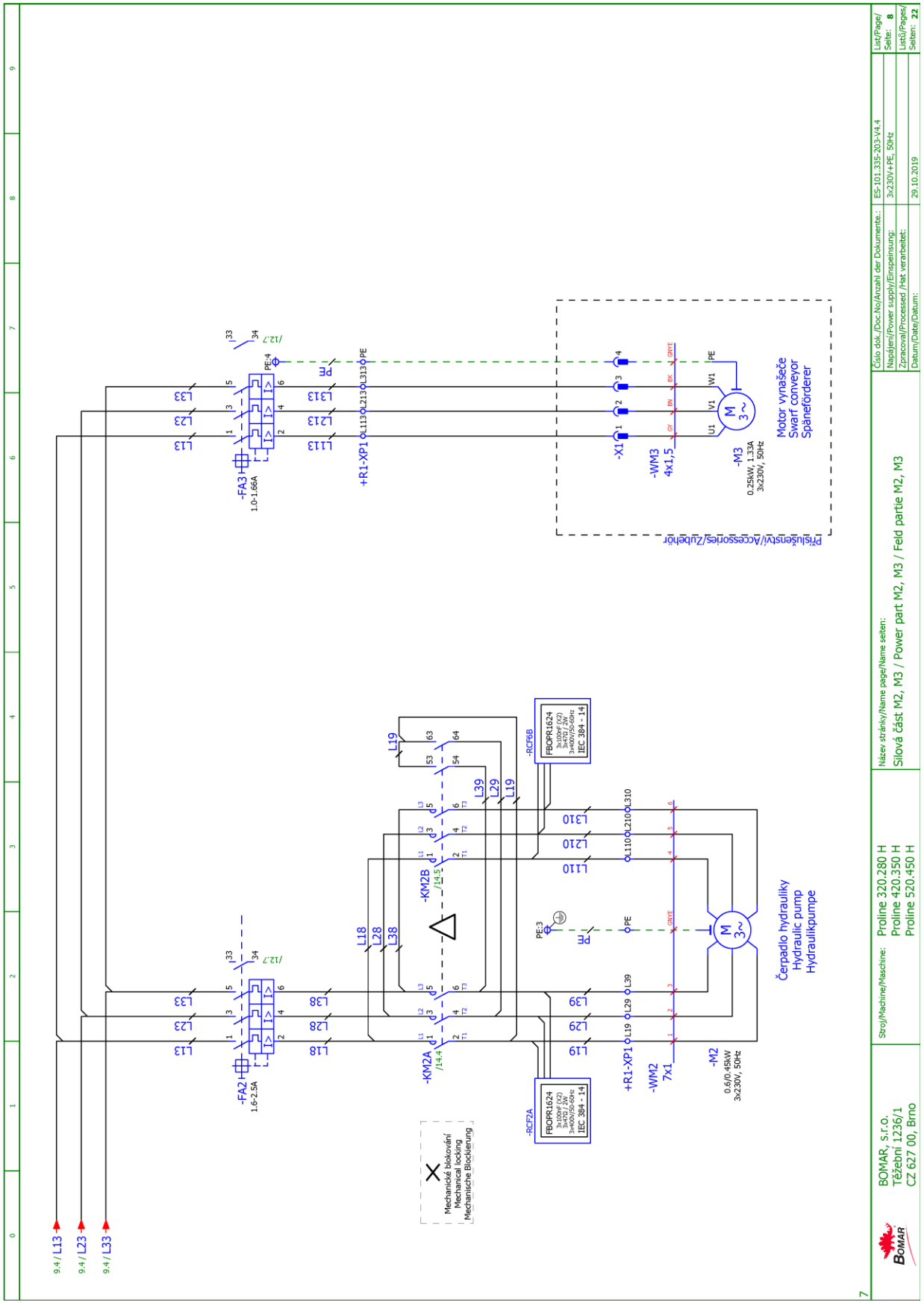
9.4 / L13
9.4 / L23
9.4 / L33
-FA2
1.6-2.5A
-FA3
1.0-1.66A
/12.7
L13
L23
L33
L18
L28
L38
L11
L21
L31
L19
L29
L39
L110
L210
L310
-KM2A
/14.4
-KM2B
/14.5
Mechanické blokování
Mechanical locking
Mechanische Blockierung
-RCF2A
-RCF6B
FBOPR1624
3x100nF (X2)
3x470J / 2kV
3x300V/50/60Hz
IEC 384 - 14
PE-3
PE-4
+R1-XP1
-WM2
7x1
-WM3
4x1,5
-X1
-M2
0.6/0.45kW
3x230V, 50Hz
-M3
0.25kW, 1.33A
3x230V, 50Hz
Čerpadlo hydrauliky
Hydraulic pump
Hydrauliikpumpe
Motor vynašeče
Swarf conveyor
Späneförderer
Příslušenství/Accessories/Zubehör
BOMAR, s.r.o.
Těžební 1236/1
CZ 627 00, Brno
Stroj/Machine/Maschine:
Proline 320.280 H
Proline 420.350 H
Proline 520.450 H
Název stránky/Name page/Name seiten:
Silová část M2, M3 / Power part M2, M3 / Feld partie M2, M3
Číslo dok./Doc.No/Anzahl der Dokumente.:
ES-101.335-203-V4.4
Napájení/Power supply/Einspeisung:
3x230V+PE, 50Hz
Zpracoval/Processed /Hat verarbeitet:
Datum/Date/Datum:
29.10.2019
List/Page/
Seite: 8
Listů/Pages/
Seiten: 22

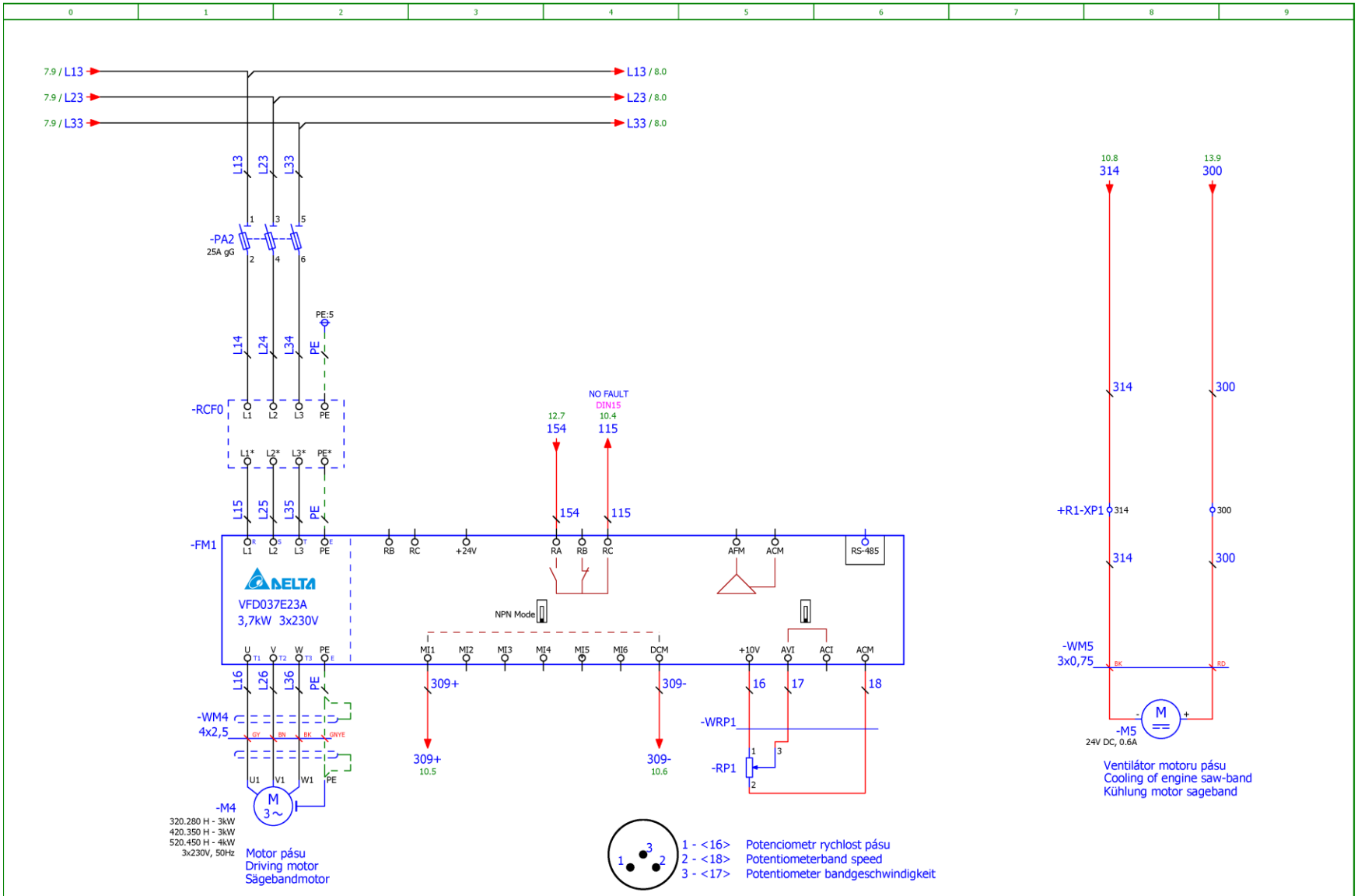

BOMAR, s.r.o. Těžební 1236/1 CZ 627 00, Brno	Stroj/Machine/Maschine: Proline 320.280 H Proline 420.350 H Proline 520.450 H	Název stránky/Name page/Name seiten: Silová část M4, M5 / Power part M4, M5 / Feld partie M4, M5	Číslo dok./Doc.No/Anzahl der Dokumente.: ES-101.335-203-V4.4 Napájení/Power supply/Einspeinsung: 3x230V+PE, 50Hz Zpracoval/Processed /Hat verarbeitet: Datum/Date/Datum: 11.10.2019	List/Page/Seite: 9 Listů/Pages/Seiten: 22	

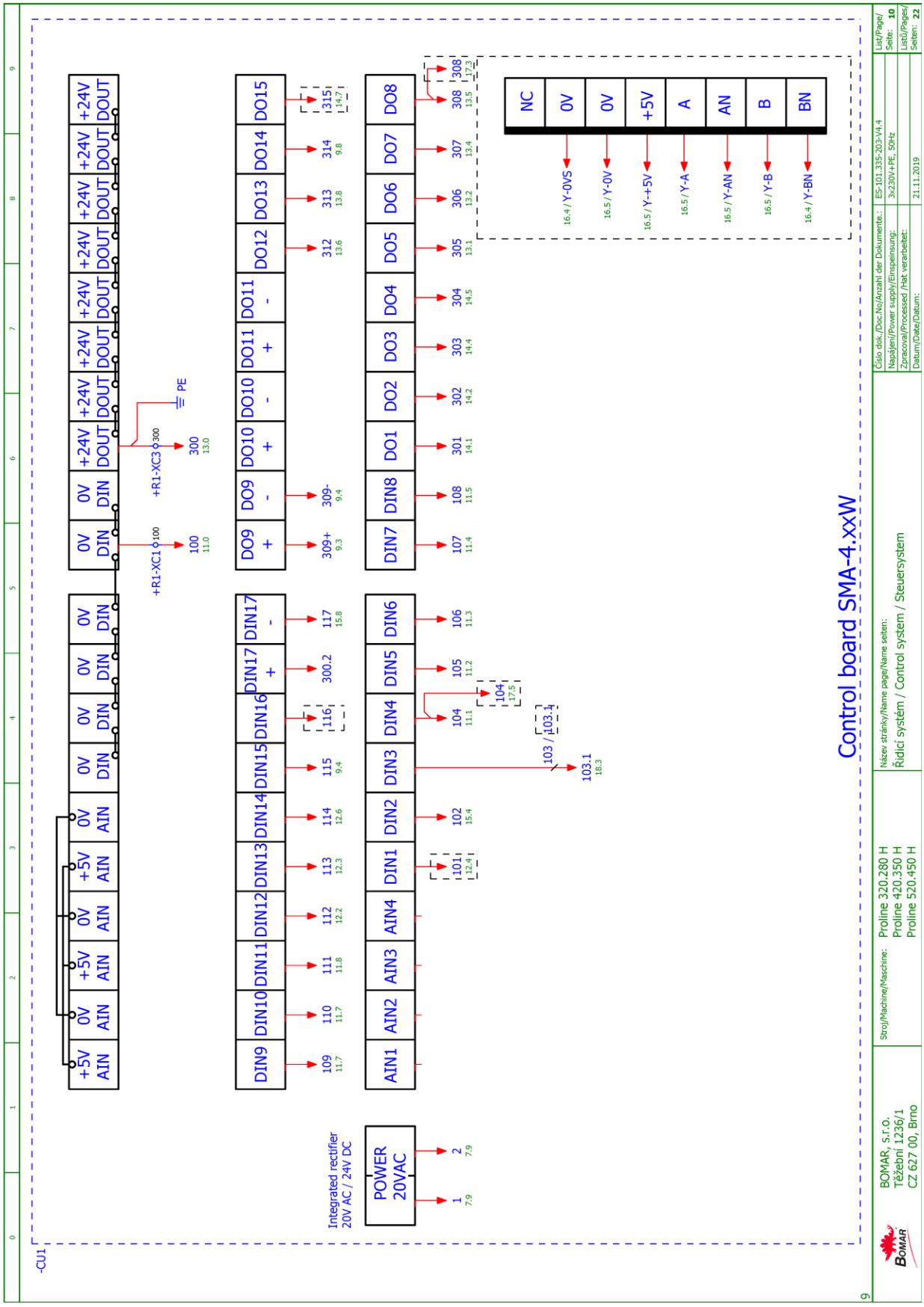
Control board SMA-4.xxW
-CU1
POWER 20VAC
Integrated rectifier 20V AC / 24V DC
AIN1 AIN2 AIN3 AIN4 DIN1 DIN2 DIN3 DIN4 DIN5 DIN6 DIN7 DIN8 DO1 DO2 DO3 DO4 DO5 DO6 DO7 DO8
DIN9 DIN10 DIN11 DIN12 DIN13 DIN14 DIN15 DIN16 DIN17 DO9 DO10 DO11 DO12 DO13 DO14 DO15
+5V AIN 0V AIN +5V AIN 0V AIN 0V AIN 0V AIN 0V AIN 0V DIN 0V DIN 0V DIN 0V DIN 0V DIN 0V DIN +24V DOUT
NC 0V 0V +5V A AN B BN
16.4 / Y-0VS 16.5 / Y-0V 16.5 / Y+5V 16.5 / Y-A 16.5 / Y-AN 16.5 / Y-B 16.4 / Y-BN
+R1-XC1 +R1-XC3 PE
BOMAR, s.r.o.
Těžební 1236/1
CZ 627 00, Brno
Stroj/Machine/Maschine:
Proline 320.280 H
Proline 420.350 H
Proline 520.450 H
Název stránky/Name page/Name seiten:
Řídicí systém / Control system / Steuersystem
Číslo dok./Doc.No/Anzahl der Dokumente.:
ES-101.335-203-V4.4
Napájení/Power supply/Einspeisung:
3x230V+PE, 50Hz
Zpracoval/Processed /Hat verarbeitet:
Datum/Date/Datum:
21.11.2019
List/Page/Seite: 10
Listů/Pages/Seiten: 22

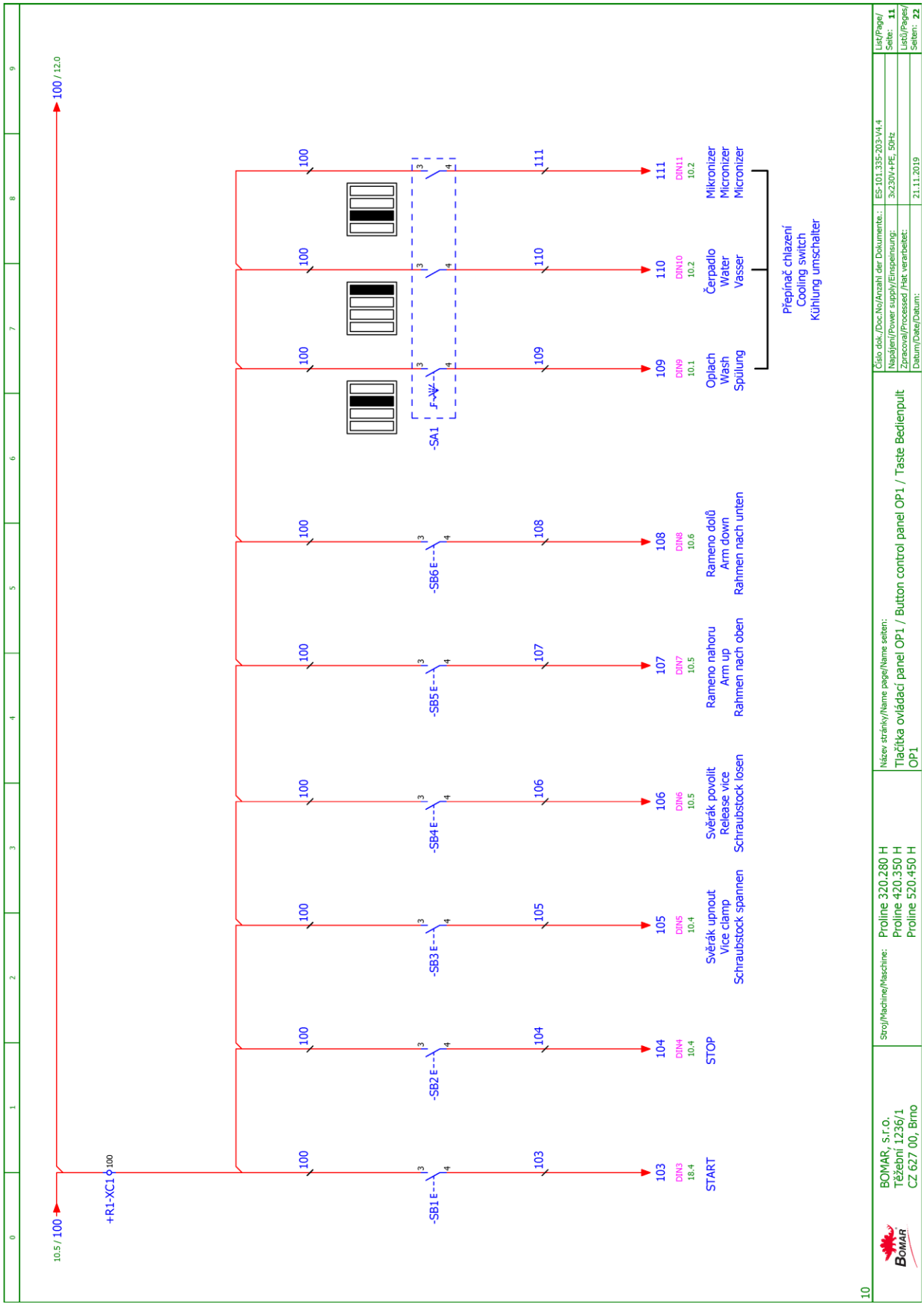
10.5 / 100
100 / 12.0
+R1-XC1
-SB1 E
-SB2 E
-SB3 E
-SB4 E
-SB5 E
-SB6 E
-SA1
103
104
105
106
107
108
109
110
111
DIN3
DIN4
DIN5
DIN6
DIN7
DIN8
DIN9
DIN10
DIN11
START
STOP
Svěrák upnout
Vice clamp
Schraubstock spannen
Svěrák povolit
Release vice
Schraubstock losen
Rameno nahoru
Arm up
Rahmen nach oben
Rameno dolů
Arm down
Rahmen nach unten
Oplach
Wash
Spülung
Čerpadlo
Water
Vasser
Mikronizer
Micronizer
Micronizer
Přepínač chlazení
Cooling switch
Kühlung umschalter
BOMAR, s.r.o.
Těžební 1236/1
CZ 627 00, Brno
Stroj/Machine/Maschine:
Proline 320.280 H
Proline 420.350 H
Proline 520.450 H
Název stránky/Name page/Name seiten:
Tlačítka ovládací panel OP1 / Button control panel OP1 / Taste Bedienpult OP1
Číslo dok./Doc.No/Anzahl der Dokumente:
ES-101.335-203-V4.4
Napájení/Power supply/Einspeisung:
3x230V+PE, 50Hz
Zpracoval/Processed /Hat verarbeitet:
Datum/Date/Datum:
21.11.2019
List/Page/Seite: 11
Listů/Pages/Seiten: 22
10

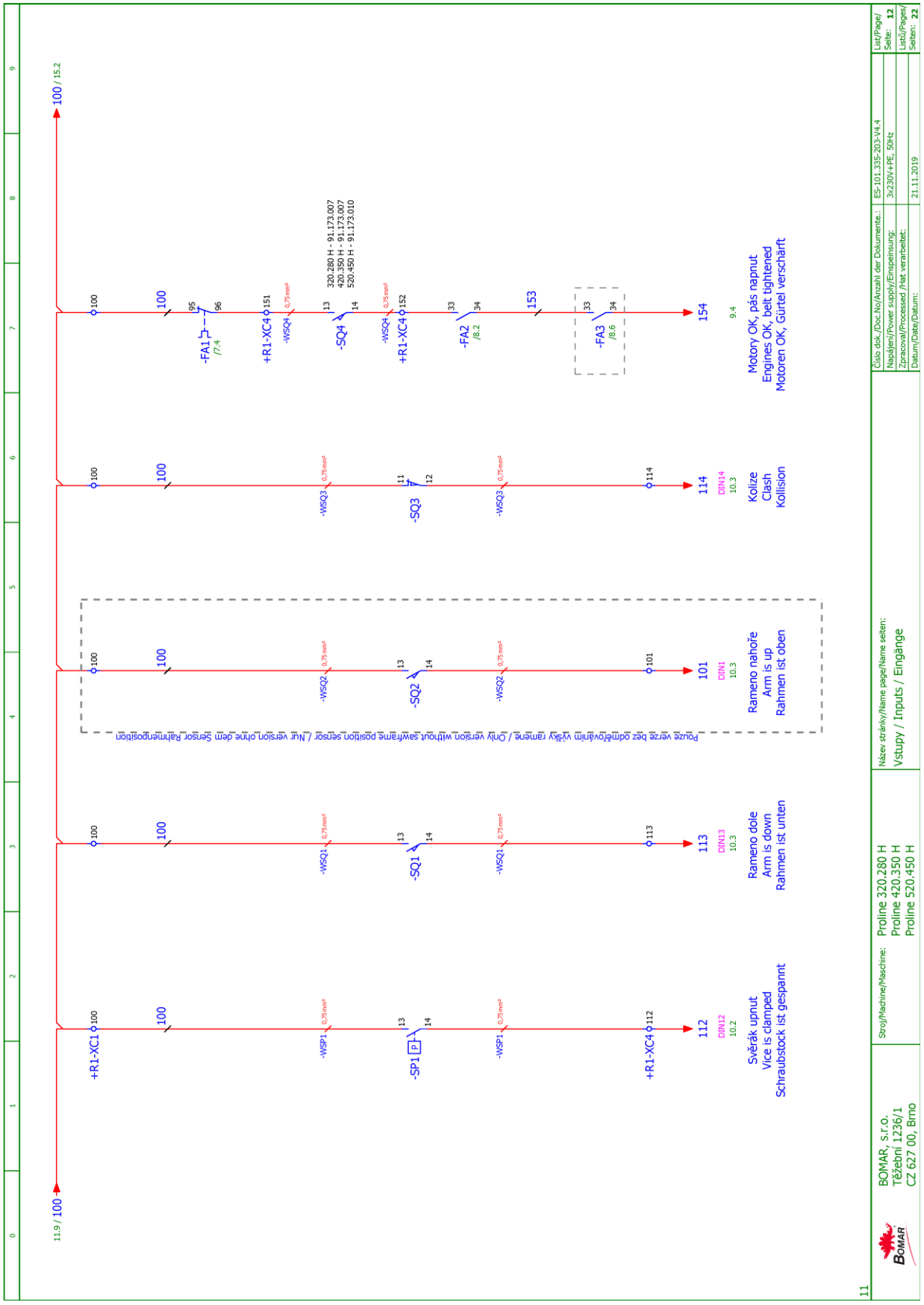
11.9 / 100
100 / 15.2
+R1-XC1
-SP1
-WSP1
+R1-XC4
112
DIN12
10.2
Svěrák upnut
Vice is clamped
Schraubstock ist gespannt
-WSQ1
-SQ1
-WSQ1
113
DIN13
10.3
Rameno dole
Arm is down
Rahmen ist unten
Používá vždy pouze jeden řídicí ventil / Only version with single solenoid valve is used / Nur version mit einem Magnetventil wird verwendet
-WSQ2
-SQ2
-WSQ2
101
DIN1
10.3
Rameno nahoře
Arm is up
Rahmen ist oben
-WSQ3
-SQ3
-WSQ3
114
DIN14
10.3
Kolize
Clash
Kollision
-FA1
/7.4
+R1-XC4
-WSQ4
-SQ4
-WSQ4
+R1-XC4
-FA2
/8.2
-FA3
/8.6
154
9.4
Motory OK, pás napnut
Engines OK, belt tightened
Motoren OK, Gürtel verschärft
320.280 H - 91.173.007
420.350 H - 91.173.007
520.450 H - 91.173.010
BOMAR, s.r.o.
Těžební 1236/1
CZ 627 00, Brno
Stroj/Machine/Maschine:
Proline 320.280 H
Proline 420.350 H
Proline 520.450 H
Název stránky/Name page/Name seiten:
Vstupy / Inputs / Eingänge
Číslo dok./Doc.No/Anzahl der Dokumente.:
ES-101.335-203-V4.4
Napájení/Power supply/Einspeisung:
3x230V+PE, 50Hz
Zpracoval/Processed /Hat verarbeitet:
Datum/Date/Datum:
21.11.2019
List/Page/
Seite: 12
Listů/Pages/
Seiten: 22

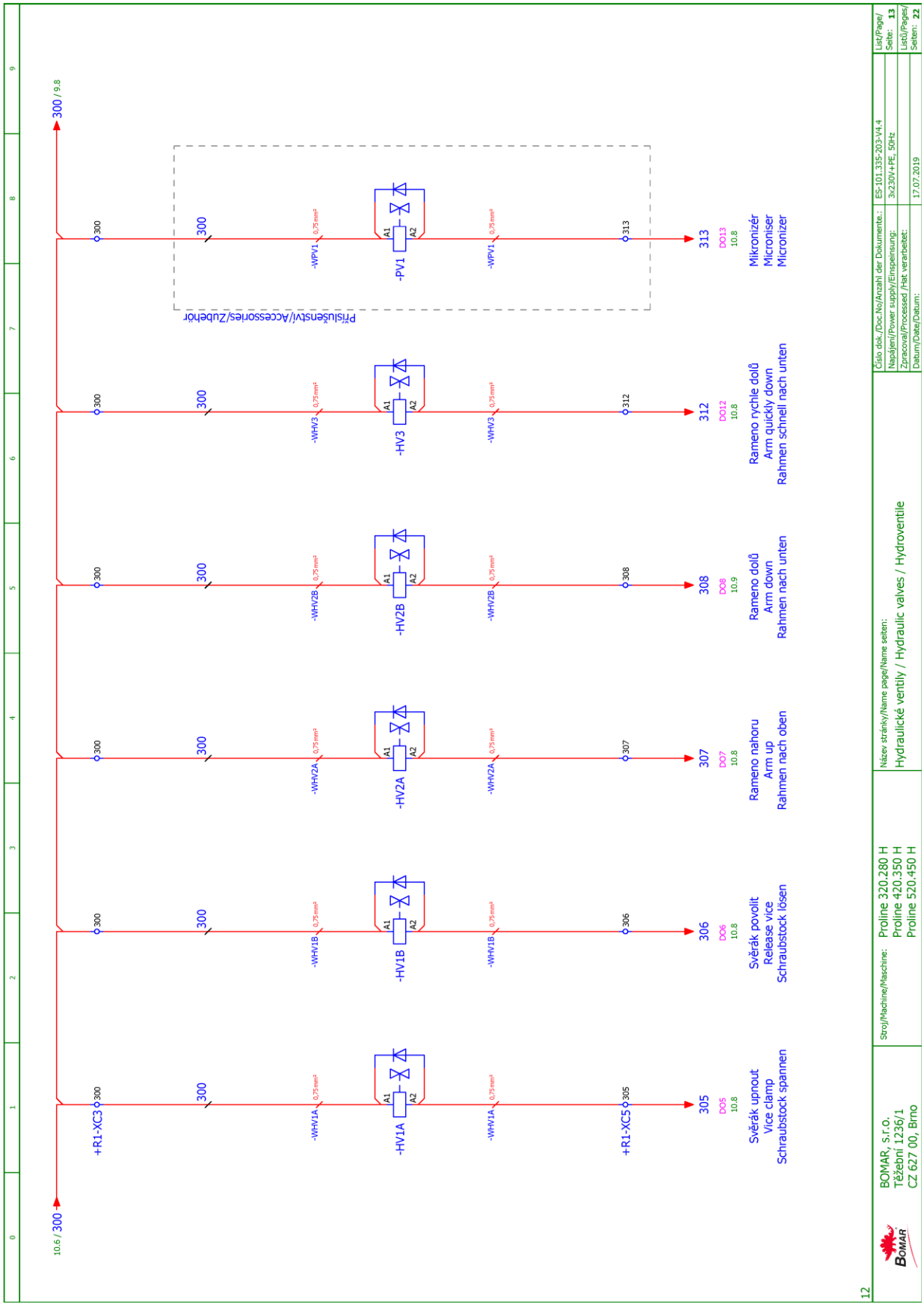
10.6 / 300
300 / 9.8
+R1-XC3
-WHV1A
-HV1A
-WPV1
-PV1
+R1-XC5
305
DO5
10.8
Svěrák upnout
Vice clamp
Schraubstock spannen
-WHV1B
-HV1B
306
DO6
10.8
Svěrák povolit
Release vice
Schraubstock lösen
-WHV2A
-HV2A
307
DO7
10.8
Rameno nahoru
Arm up
Rahmen nach oben
-WHV2B
-HV2B
308
DO8
10.9
Rameno dolů
Arm down
Rahmen nach unten
-WHV3
-HV3
312
DO12
10.8
Rameno rychle dolů
Arm quickly down
Rahmen schnell nach unten
313
DO13
10.8
Mikronizér
Microniser
Micronizer
Příslušenství/Accessories/Zubehör
BOMAR, s.r.o.
Těžební 1236/1
CZ 627 00, Brno
Stroj/Machine/Maschine:
Proline 320.280 H
Proline 420.350 H
Proline 520.450 H
Název stránky/Name page/Name seiten:
Hydraulické ventily / Hydraulic valves / Hydroventile
Číslo dok./Doc.No/Anzahl der Dokumente.:
ES-101.335-203-V4.4
Napájení/Power supply/Einspeisung:
3x230V+PE, 50Hz
Zpracoval/Processed /Hat verarbeitet:
Datum/Date/Datum:
17.07.2019
List/Page/
Seite: 13
Listů/Pages/
Seiten: 22
12

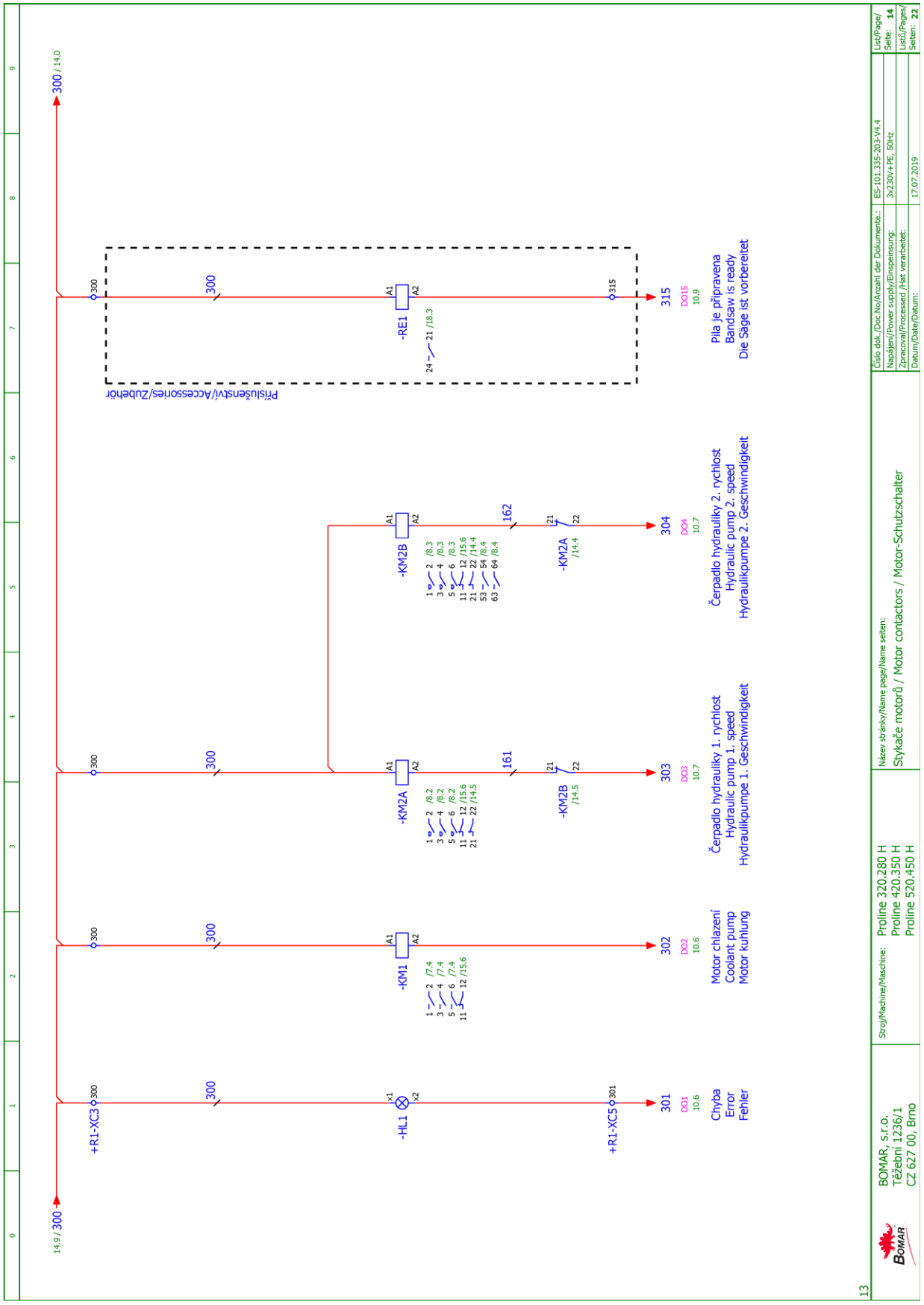
14.9 / 300
300 / 14.0
+R1-XC3
-HL1
Chyba
Error
Fehler
301
DO1
10.6
+R1-XC5
-KM1
Motor chlazení
Coolant pump
Motor kuhlung
302
DO2
10.6
-KM2A
Čerpadlo hydrauliky 1. rychlost
Hydraulic pump 1. speed
Hydraulikpumpe 1. Geschwindigkeit
303
DO3
10.7
-KM2B
Čerpadlo hydrauliky 2. rychlost
Hydraulic pump 2. speed
Hydraulikpumpe 2. Geschwindigkeit
304
DO4
10.7
-RE1
Pila je připravena
Bandsaw is ready
Die Säge ist vorbereitet
315
DO15
10.9
Příslušenství/Accessories/Zubehör
BOMAR, s.r.o.
Těžební 1236/1
CZ 627 00, Brno
Stroj/Machine/Maschine:
Proline 320.280 H
Proline 420.350 H
Proline 520.450 H
Název stránky/Name page/Name seiten:
Stykače motorů / Motor contactors / Motor-Schutzschalter
Číslo dok./Doc.No/Anzahl der Dokumente.:
ES-101.335-203-V4.4
Napájení/Power supply/Einspeisung:
3x230V+PE, 50Hz
Zpracoval/Processed /Hat verarbeitet:
Datum/Date/Datum:
17.07.2019
List/Page/
Seite: 14
Listů/Pages/
Seiten: 22
13

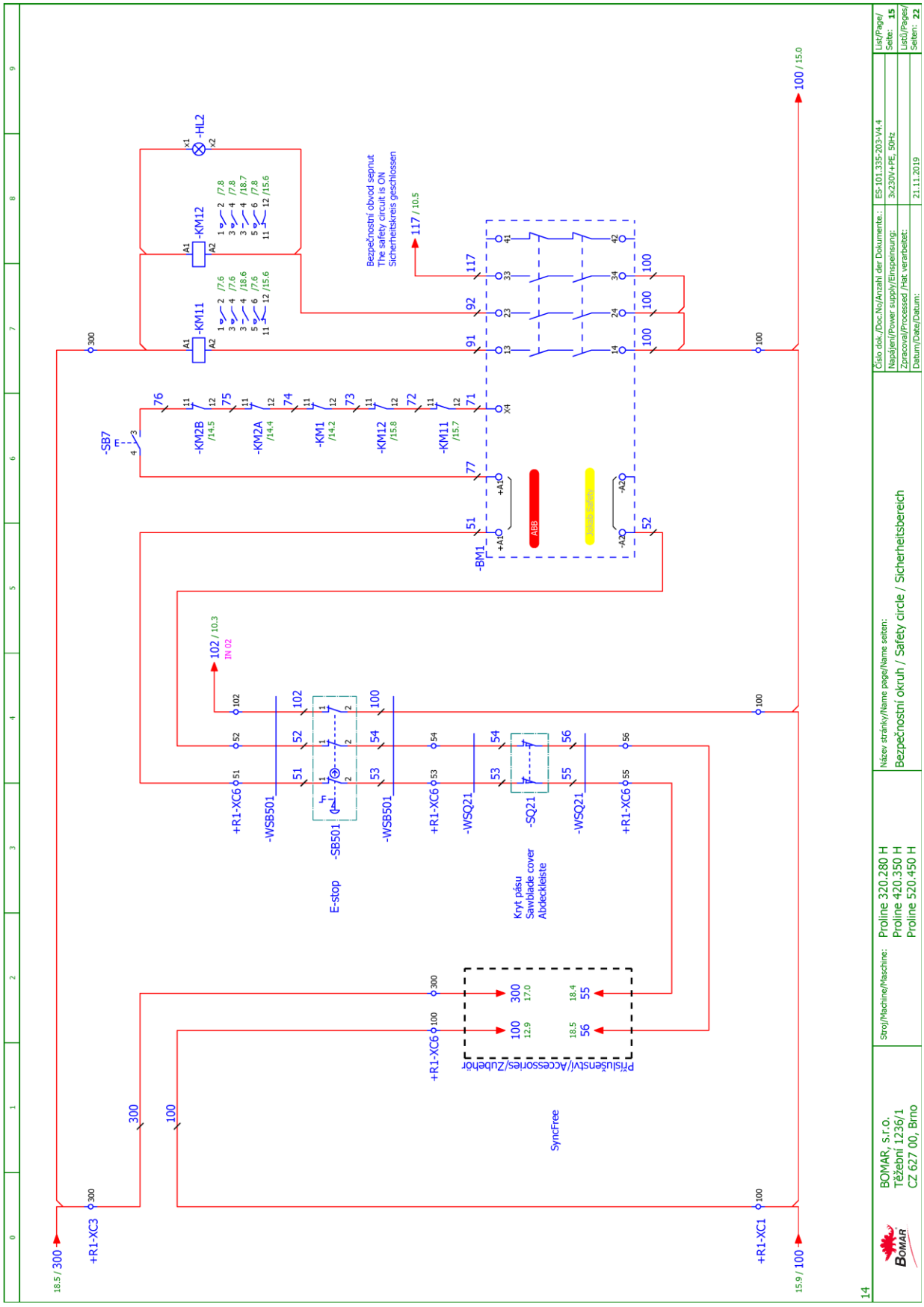
Bezpečnostní obvod sepnut
The safety circuit is ON
Sicherheitskreis geschlossen
E-stop
Kryt pásu
Sawblade cover
Abdeckleiste
SyncFree
Příslušenství/Accessories/Zubehör
Číslo dok./Doc.No/Anzahl der Dokumente: ES-101.335-203-V4.4
Napájení/Power supply/Einspeisung: 3x230V+PE, 50Hz
Zpracoval/Processed /Hat verarbeitet:
Datum/Date/Datum: 21.11.2019
List/Page/Seite: 15
Listů/Pages/Seiten: 22
Název stránky/Name page/Name seiten:
Bezpečnostní okruh / Safety circle / Sicherheitsbereich
Stroj/Machine/Maschine:
Proline 320.280 H
Proline 420.350 H
Proline 520.450 H
BOMAR, s.r.o.
Těžební 1236/1
CZ 627 00, Brno

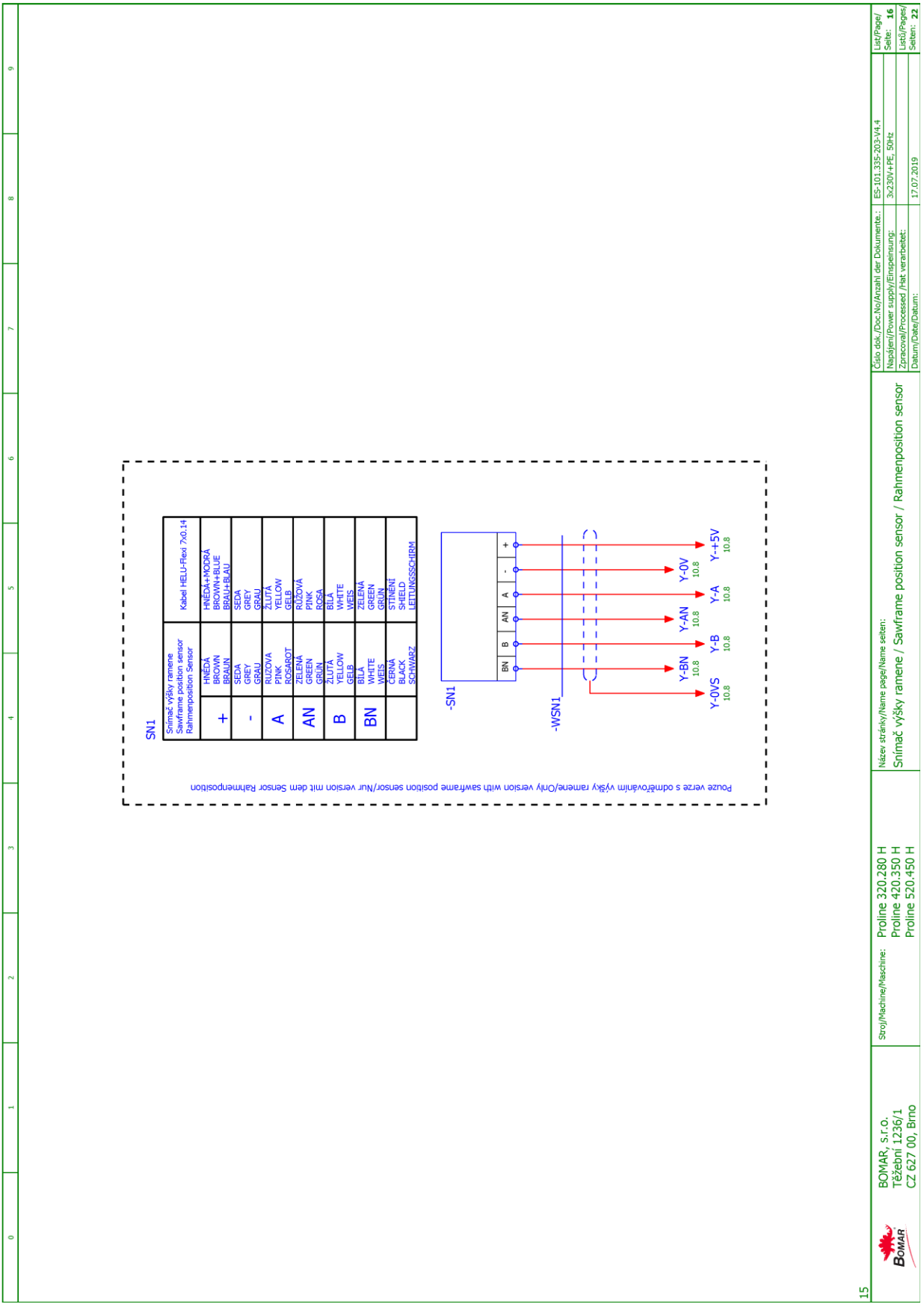
SN1
Snímač výšky ramene
Sawframe position sensor
Rahmenposition Sensor
Kabel HELU-Flexi 7x0.14
+ HNĚDÁ+MODRÁ BROWN+BLUE BRAUN+BLAU
- SEDÁ GREY GRAU
A ŽLUTÁ YELLOW GELB
AN RŮŽOVÁ PINK ROSA
B BÍLÁ WHITE WEIS
BN ZELENÁ GREEN GRÜN
STÍNĚNÍ SHIELD LEITUNGSSCHIRM
ČERNÁ BLACK SCHWARZ
-SN1
-WSN1
BN B AN A - +
Y-0VS 10.8
Y-BN 10.8
Y-B 10.8
Y-AN 10.8
Y-A 10.8
Y-0V 10.8
Y-+5V 10.8
Pouze verze s odměřováním výšky ramene/Only version with sawframe position sensor/Nur version mit dem Sensor Rahmenposition
Číslo dok./Doc.No/Anzahl der Dokumente.: ES-101.335-203-V4.4
Napájení/Power supply/Einspeisung: 3x230V+PE, 50Hz
Zpracoval/Processed /Hat verarbeitet:
Datum/Date/Datum: 17.07.2019
List/Page/ Seite: 16
Listů/Pages/ Seiten: 22
Název stránky/Name page/Name seiten:
Snímač výšky ramene / Sawframe position sensor / Rahmenposition sensor
Stroj/Machine/Maschine:
Proline 320.280 H
Proline 420.350 H
Proline 520.450 H
BOMAR, s.r.o.
Těžební 1236/1
CZ 627 00, Brno
15

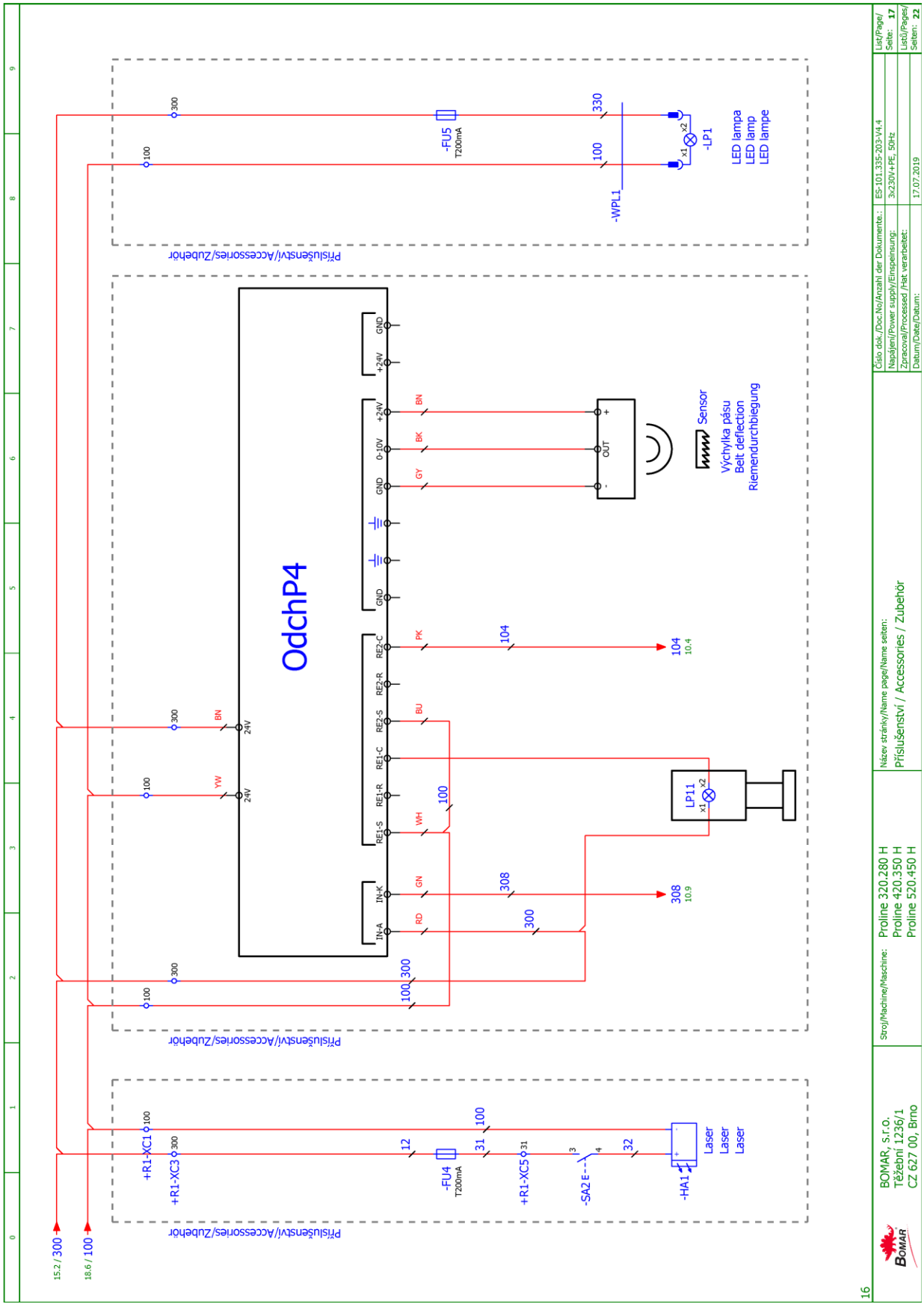
OdchP4
IN-A
IN-K
RE1-S
RE1-R
RE1-C
RE2-S
RE2-R
RE2-C
GND
0-10V
+24V
+24V
GND
24V
24V
BN
YW
GN
RD
WH
BU
PK
GY
BK
BN
OUT
Sensor
Výchylka pásu
Belt deflection
Riemendurchbiegung
LP11
104
10.4
308
10.9
-FU5
T200mA
-WPL1
-LP1
LED lampa
LED lamp
LED lampe
Příslušenství/Accessories/Zubehör
+R1-XC1
+R1-XC3
-FU4
T200mA
+R1-XC5
-SA2
-HA1
Laser
Laser
Laser
15.2 / 300
18.6 / 100
BOMAR, s.r.o.
Těžební 1236/1
CZ 627 00, Brno
Stroj/Machine/Maschine:
Proline 320.280 H
Proline 420.350 H
Proline 520.450 H
Název stránky/Name page/Name seiten:
Příslušenství / Accessories / Zubehör
Číslo dok./Doc.No/Anzahl der Dokumente.:
ES-101.335-203-V4.4
Napájení/Power supply/Einspeisung:
3x230V+PE, 50Hz
Zpracoval/Processed /Hat verarbeitet:
Datum/Date/Datum:
17.07.2019
List/Page/
Seite:
17
Listů/Pages/
Seiten:
22
16

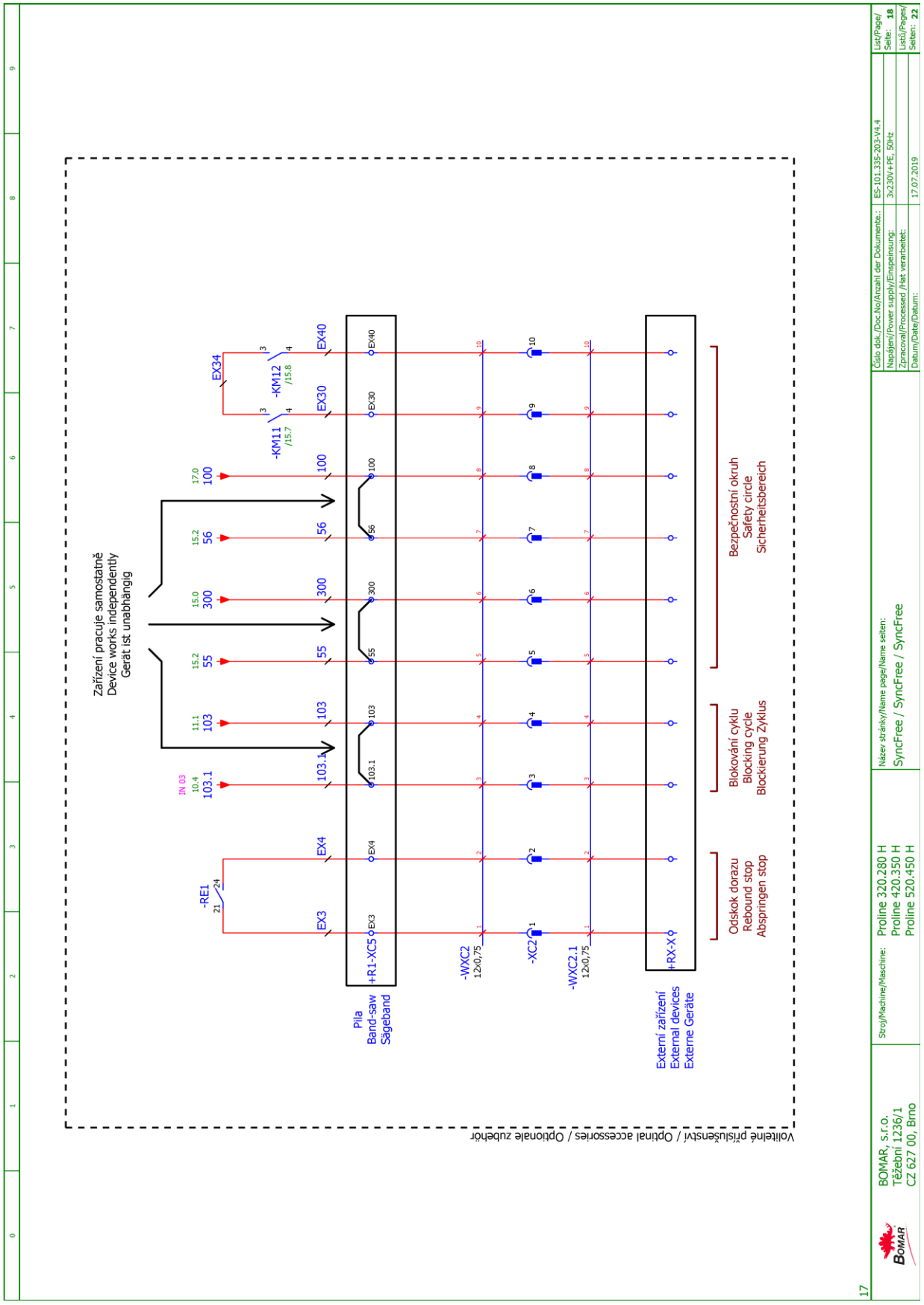
Zařízení pracuje samostatně
Device works independently
Gerät ist unabhängig
IN 03
10.4
103.1
11.1
103
15.2
55
15.0
300
15.2
56
17.0
100
-RE1
21
24
EX3
EX4
103.1
103
55
300
56
100
EX34
-KM11
/15.7
-KM12
/15.8
EX30
EX40
Pila
Band-saw
Sägeband
+R1-XC5
-WXC2
12x0,75
-XC2
-WXC2.1
12x0,75
Externí zařízení
External devices
Externe Geräte
+RX-X
Odskok dorazu
Rebound stop
Abspringen stop
Blokování cyklu
Blocking cycle
Blockierung Zyklus
Bezpečnostní okruh
Safety circle
Sicherheitsbereich
Volitelné příslušenství / Optional accessories / Optionale zubehör
17
BOMAR, s.r.o.
Těžební 1236/1
CZ 627 00, Brno
Stroj/Machine/Maschine:
Proline 320.280 H
Proline 420.350 H
Proline 520.450 H
Název stránky/Name page/Name seiten:
SyncFree / SyncFree / SyncFree
Číslo dok./Doc.No/Anzahl der Dokumente.:
ES-101.335-203-V4.4
Napájení/Power supply/Einspeisung:
3x230V+PE, 50Hz
Zpracoval/Processed /Hat verarbeitet:
Datum/Date/Datum:
17.07.2019
List/Page/
Seite: 18
Listů/Pages/
Seiten: 22

6.2. Elektrické schema / Elektroschema / Electric scheme – Proline 520.450 Hsx

6.2.1. 3×400 V + PE, 50 Hz

Obsah / Table of contents / Inhalt

Strana Page Seite	Název strany Page name Seitenname	Datum Date Datum
1	Úvodní strana / Start page / Startseite	30.3.2016
2	Obsah / Table of contents / Inhaltsverzeichnis	4.10.2016
3	Kusovník artiklů / Parts list / Artikelstückliste	14.7.2016
3.a	Kusovník artiklů / Parts list / Artikelstückliste	4.10.2016
3.b	Kusovník artiklů / Parts list / Artikelstückliste	4.10.2016
3.c	Kusovník artiklů / Parts list / Artikelstückliste	4.10.2016
3.d	Kusovník artiklů / Parts list / Artikelstückliste	4.10.2016
3.e	Kusovník artiklů / Parts list / Artikelstückliste	4.10.2016
4	Ovládací panel OP1 / Control panel OP1 / Bedienpult OP1	23.3.2016
5	Rozmístění hydraulických ventilů / Placement of Hydraulic valves / Platzierung die Hydroventile	23.3.2016
6	Rozmístění prvků v rozvaděči R1 / Placement of elements in enclosure R1 / Platzierung der Elemente im Schaltschrank R1	4.10.2016
7	Silová část M1 / Power part M1 / Feld partie M1	4.10.2016
8	Silová část M2,M3 / Power part M2,M3 / Feld partie M2,M3	4.10.2016
9	Silová část M4 M5 / Power part M4, M5 / Feld partie M4, M5	4.10.2016
10	Řidicí systém / Control system / Steuersystem	13.4.2016
12	Tlačítka ovládací panel OP1 / Button control panel OP1 / Taste Bedienpult OP1	23.3.2016
13	Vstupy / Inputs / Eingänge	4.10.2016
14	Hydraulické ventily / Hydraulic valves / Hydroventile	23.3.2016
15	Stykače motorů / Motor contactors / Motor-Schutzschalter	4.10.2016
16	Bezpečnostní okruh / Safety circle / Sicherheitsbereich	4.10.2016
18	Snímač výšky ramene / Sawframe position sensor / Rahmenposition sensor	23.3.2016
19	Příslušenství / Accessories / Zubehör	23.3.2016
20	SyncFree / SyncFree / SyncFree	13.7.2016

Kusovník artiklů / Parts list / Stückliste

Označení přístroje Device identification Geräteidentifikation	Typ přístroje Device description Gerätebeschreibung	Objednací číslo Type number Typennummer	Výrobce Manufacturer Hersteller	Skladové číslo Part number Lagernummer	Množství Quantity Menge	Umístění Location Stelle
-BM1	Bezpečnostní relé 24VDC, 3NO Safety relay 24VDC, 3NO Sicherheitsrelais 24VDC, 3NO	BT50	ABB	91.051.063	1	/16.5
-FA2	Pomocné kontakty - 1xNO+1xNC Auxiliary contacts - 1xNO+1xNC Hilfskontakte - 1xNO+1xNC	HKF1-11	ABB	91.046.002	1	/8.2
-FA3	Pomocné kontakty - 1xNO+1xNC Auxiliary contacts - 1xNO+1xNC Hilfskontakte - 1xNO+1xNC	HKF1-11	ABB	91.046.002	1	/8.6
-HL1	Signálka LED červená na adaptér Red LED light for adapter Red LED-Licht für Adapter	M22-LED-R	EATON	91.061.027	1	/15.1
-KM2A	Stykač - 4kW/400V, 3P Contactor - 4kW/400V, 3P Schütz - 4 kW / 400V, 3P	AF09-30-01-11	ABB	91.040.047	1	/15.4
-KM2A	Mechanické blokování Mechanical interlock unit Mechanische Interlockeinheit	VM4	ABB	91.041.045	1	/15.4
-KM2B	Stykač - 4kW/400V, 3P Contactor - 4kW/400V, 3P Schütz - 4 kW / 400V, 3P	AF09-30-01-11	ABB	91.040.047	1	/15.6
-KM2B	Pomocný kontakt - 1xNO Auxiliary contact - 1xNO Hilfskontakt - 1xNO	CA4-10	ABB	91.041.044	2	/15.6
-SA1	Hlavice s otočným přepínačem - 4 polohy Head with rotary switch - 4 positions Kopf mit Drehschalter - 4 Positionen	M22 - WRK4	EATON	91.060.087	1	/12.7
-FU1	Pojistka trubičková - 4A/250V, pomalá, 5x20 Tube fuse - 4A/250V, slow, 5x20 Rohrsicherung - 4A / 250V, langsam, 5x20	T4A/250V	ESKA	91.230.015	1	/7.8
-RP1	Potenciometr 4k7 Potenciometer 4k7 Potentiometer 4k7	TP195 4k7/N20A	Elektronické součástky CZ, a.s	91.283.015	1	/9.5
-FA1	Tepelné relé - 0.41A Thermal relay - 0.41A Thermische Relais - 0.41A	T16-0,41	ABB	91.050.030	1	/7.4

The manufacturer reserves right to use an equivalent replacement device.

2

Kusovník artiklů / Parts list / Stückliste

Označení přístroje Device identification Geräteidentifikation	Typ přístroje Device description Gerätebeschreibung	Objednací číslo Type number Typennummer	Výrobce Manufacturer Hersteller	Skladové číslo Part number Lagernummer	Množství Quantity Menge	Umístění Location Stelle
-RP1	Hlavice potenciometru - 24mm Head of potentiometer 24mm Leiter Potentiometer 24mm	S8877 BLK	GES-ELECTRONICS, a.s.	91.060.063	1	/9.5
-RCF1	Filtr RFC vývodový Efferent RFC filter Ableitenden RFC Filter	FBOPR1624	Ing. Miroslav Vlček	91.041.015	1	/7.3
-RCF2A	Filtr RFC vývodový Efferent RFC filter Ableitenden RFC Filter	FBOPR1624	Ing. Miroslav Vlček	91.041.015	1	/8.1
-RCF6B	Filtr RFC vývodový Efferent RFC filter Ableitenden RFC Filter	FBOPR1624	Ing. Miroslav Vlček	91.041.015	1	/8.4
-RCF11	Filtr RFC vývodový Efferent RFC filter Ableitenden RFC Filter	FBOPR1624	Ing. Miroslav Vlček	91.041.015	1	/7.6
-RCF12	Filtr RFC vývodový Efferent RFC filter Ableitenden RFC Filter	FBOPR1624	Ing. Miroslav Vlček	91.041.015	1	/7.7
-FA2	Motorový spouštěč - 2.5A Motor starter - 2.5A Motorstarter - 2.5A	MS116-2,5	ABB	91.045.021	1	/8.2
-FA3	Motorový spouštěč - 1A Motor starter - 1A Motorstarter - 1A	MS116-1,00	ABB	91.045.019	1	/8.6
-KM1	Ministykač - 4kW/400V, 3P Mini contactor - 4kW/400V, 3P Mini-Schütz - 4kW / 400V, 3P	B6S-30-01-1.7-71	ABB	91.040.049	1	/15.2
-KM2A	Pomocný kontakt - 1xNC Auxiliary contact - 1xNC Hilfskontakt - 1 xNC	CA4-01	ABB	91.041.043	1	/15.4
-KM2B	Pomocný kontakt - 1xNC Auxiliary contact - 1xNC Hilfskontakt - 1 xNC	CA4-01	ABB	91.041.043	1	/15.6
-KM11	Pomocný kontakt - 1xNC Auxiliary contact - 1xNC Hilfskontakt - 1 xNC	CA4-01	ABB	91.041.043	1	/16.7

The manufacturer reserves right to use an equivalent replacement device.

Kusovník artiklů / Parts list / Stückliste

Označení přístroje Device identification Geräteidentifikation	Typ přístroje Device description Gerätebeschreibung	Objednací číslo Type number Typennummer	Výrobce Manufacturer Hersteller	Skladové číslo Part number Lagernummer	Množství Quantity Menge	Umístění Location Stelle
-KM11	Stýkač 7,5kW/400V Contactor 7,5kW/400V Schütz 7,5kW/400V	AF16-30-10-11	ABB	91.040.056	1	/16.7
-KM12	Pomocný kontakt - 1xNC Auxiliary contact - 1xNC Hilfskontakt - 1 xNC	CA4-01	ABB	91.041.043	1	/16.8
-KM12	Stýkač 7,5kW/400V Contactor 7,5kW/400V Schütz 7,5kW/400V	AF16-30-10-11	ABB	91.040.056	1	/16.8
-PA1	Pojistkový odpojovač E-90 - 2P Fuse disconnector E-90 - 2P Sicherungstrenner E90 - 2P	E 92/32	ABB	91.241.013	1	/7.5
-QS1	3 pólový odpínač, 40A Disconnector - 3P, 40A Trennschalter - 3P, 40A	OT40FT3	ABB	91.170.019	1	/7.0
-RE1	Ministykač - 4kW/400V, 3P Mini contactor - 4kW/400V, 3P Mini-Schütz - 4kW / 400V, 3P	B6S-30-01-1.7-71	ABB	91.040.049	1	/15.8
-RP1	Svorka rychloupínací Fastconnect clamp Fast Connect Klemm	WAGO 224-112	WAGO	91.250.009	3	/9.5
-SA1	Upevňovací adaptér + 1NO Attaching adapter + 1NO Montageadapter + 1NO	M22-AK10	EATON	91.061.021	1	/12.7
-SA1	Kontaktní blok - 1NO Contact block - 1NO Kontaktblock - 1NO	M22-K10	EATON	91.061.022	2	/12.7
-SB1	Hlavice dvoutlačítka bílá/černá start/stop Double button head white/black start/stop Doppelrundkopf weiß/schwarz Start/Stopp	M22-DDL-WS-GB1/GB0	EATON	91.060.034	1	/12.1
-SB1	Upevňovací adaptér + 1NO Attaching adapter + 1NO Montageadapter + 1NO	M22-AK10	EATON	91.061.021	1	/12.1
-SB2	Kontaktní blok - 1NO Contact block - 1NO Kontaktblock - 1NO	M22-K10	EATON	91.061.022	1	/12.2

The manufacturer reserves right to use an equivalent replacement device.

3.a

Kusovník artiklů / Parts list / Stückliste

Označení přístroje Device identification Geräteidentifikation	Typ přístroje Device description Gerätebeschreibung	Objednací číslo Type number Typennummer	Výrobce Manufacturer Hersteller	Skladové číslo Part number Lagernummer	Množství Quantity Menge	Umístění Location Stelle
-SB3	Upevňovací adaptér + 1NO Attaching adapter + 1NO Montageadapter + 1NO	M22-AK10	EATON	91.061.021	1	/12.2
-SB3	Hlavice dvoutlačítka bílá/černá, zavřít/otevřít Double button head white/black, arrow close/open Doppelrundkopf weiß / schwarz, Pfeil Schließen / Öffnen	M22-DDL-WS-*	EATON	91.060.055	1	/12.2
-SB4	Kontaktní blok - 1NO Contact block - 1NO Kontaktblock - 1NO	M22-K10	EATON	91.061.022	1	/12.3
-SB5	Upevňovací adaptér + 1NO Attaching adapter + 1NO Montageadapter + 1NO	M22-AK10	EATON	91.061.021	1	/12.4
-SB5	Hlavice dvoutlačítka bílá/černá šipka nahoru/dolů Double button head white/black, arrow up/down Doppelrundkopf weiß / schwarz, Pfeil nach oben / unten	M22-DDL-WS-*-*	EATON	91.060.054	1	/12.4
-SB6	Kontaktní blok - 1NO Contact block - 1NO Kontaktblock - 1NO	M22-K10	EATON	91.061.022	1	/12.5
-SB7	Upevňovací adaptér + 1NO Attaching adapter + 1NO Montageadapter + 1NO	M22-AK10	EATON	91.061.021	1	/16.6
-SB7	Hlavice prosvětleného tlačítka žlutá Yellow trasparent switch Leiter beleuchtet gelbe Taste	M22-DL-Y	EATON	91.060.053	1	/16.6
-SB501	Total stop - hlavice + 3xNC Emergency-stop mushroom push - button + 3xNC Not-Aus-Pilz - Taster + 3 xNC	YW1B-V4E02R	IDEC	91.060.084	1	/16.4
-SB501	Kontakt - 1x NO Contact - 1x NO Kontakt - 1x NO	YW-E10	IDEC	91.061.044	1	/16.4
-TR1	Toroidní transformátor - 400V/230V/20V 4,5A 90VA Toroidal transformer - 400V / 230V / 20V 4,5A 90VA Ringkerntransformator - 400V / 230V / 20V 4,5A 90VA	400V/230V/20V 4,5A 90VA	KARBAN s.r.o.	91.080.023	1	/7.6
-SQ21	Bezpečnostní koncový spínač - 2xNC Safety Limit Switch - 2x NC Sicherheitsendschalter - 2x NC	QKS8	KEDU	91.173.012	1	/16.4

The manufacturer reserves right to use an equivalent replacement device.

3.b

Kusovník artiklů / Parts list / Stückliste

Označení přístroje Device identification Geräteidentifikation	Typ přístroje Device description Gerätebeschreibung	Objednací číslo Type number Typennummer	Výrobce Manufacturer Hersteller	Skladové číslo Part number Lagernummer	Množství Quantity Menge	Umístění Location Stelle
-PA1	Pojistka válcová - 2A, 10x38, pomalá Tube fuse - 2A, 10x38, slow Rohrsicherung - 2A, 10x38, langsam	PV10 2A gG	OEZ	91.230.034	2	/7.5
-PA2	Pojistkový odpínač pro válcové vložky - 3P Switch fuse for the cylinder inserts - 3P Schalter Sicherung für den Zylindereinsätze - 3P	E 93/32	ABB	91.241.014	1	/9.1
-PA2	Pojistka válcová - 20A, 10x38, rychlá Tube fuse - 20A, 10x38, fast Rohrsicherung - 20A, 10x38, schnell	PV10 20A gG	OEZ	91.230.038	1	/9.1
-SQ4	Koncový spínač - 1NC+1NO Limit switch - 1NC+1NO Endschalter - 1NC+1NO	D4N-4A31	OMRON	91.173.007	1	/13.7
-SQ1	Koncový spínač - 1NO + 1NC, kladka, pomalá akce Limit switch - 1NO + 1NC, pulley, slow action Endschalter - 1NO + 1NC, rolle, langsame Einwirkung	FR 605-M2	PIZZATO	91.173.009	1	/13.3
-SQ2	Koncový spínač - 1NO + 1NC, kladka, pomalá akce Limit switch - 1NO + 1NC, pulley, slow action Endschalter - 1NO + 1NC, rolle, langsame Einwirkung	FR 615-M2	PIZZATO	91.173.044	1	/13.4
-SQ3	Koncový spínač - 1NO + 1NC, dlouhá nastavitelná kladka, M2, snap action Limit switch - 1NO + 1NC, long adjustable pulley, M2, snap action Endschalter - 1NO + 1NC, lange verstellbare rolle, M2, schnapp	FR 655-M2	PIZZATO	91.173.045	1	/13.6
-FM1	Frekvenční měnič - 7.5kW, 3x400VAC Frequency converter - 7.5kW, 3x400VAC Frequenzumrichter - 7,5 kW, 3x400VAC	VFD075E43A	DELTA ELECTRONICS, INC.	91.012.092	1	/9.1
-QS1	Rukojeť odpínače 48x48mm - černá Handle switch 48x48mm - black Griffschalter 48x48mm - Schwarz	OHBS3PH	ABB	91.180.018	1	/7.0
-CU1	Řídící obvod Control unit Steuereinheit	SMA_4.01W	Bomar	265.918	1	/10.0
-RCF0	Odrušovací filtr 25A Noise filter 25A Rauschfilter 25A	25EB15/50/C2	WIDECOM TECHNOLOGY s.r.o.	91.041.063	1	/7.1
-FU1	Svorka pojistková Fuse terminal Sicherungsklemme	WK4/THSi5U	WIELAND	91.251.102	1	/7.8

The manufacturer reserves right to use an equivalent replacement device.

3.c

Kusovník artiklů / Parts list / Stückliste

Označení přístroje Device identification Geräteidentifikation	Typ přístroje Device description Gerätebeschreibung	Objednací číslo Type number Typennummer	Výrobce Manufacturer Hersteller	Skladové číslo Part number Lagernummer	Množství Quantity Menge	Umístění Location Stelle
-M5	Ventilátor 24VDC, 154CFM Fan 24VDC, 154CFM Fan 24VDC, 154CFM	RDH1238 B2	Xinruilian Electronic Co.	91.015.126	1	/9.8

The manufacturer reserves right to use an equivalent replacement device.

3.d

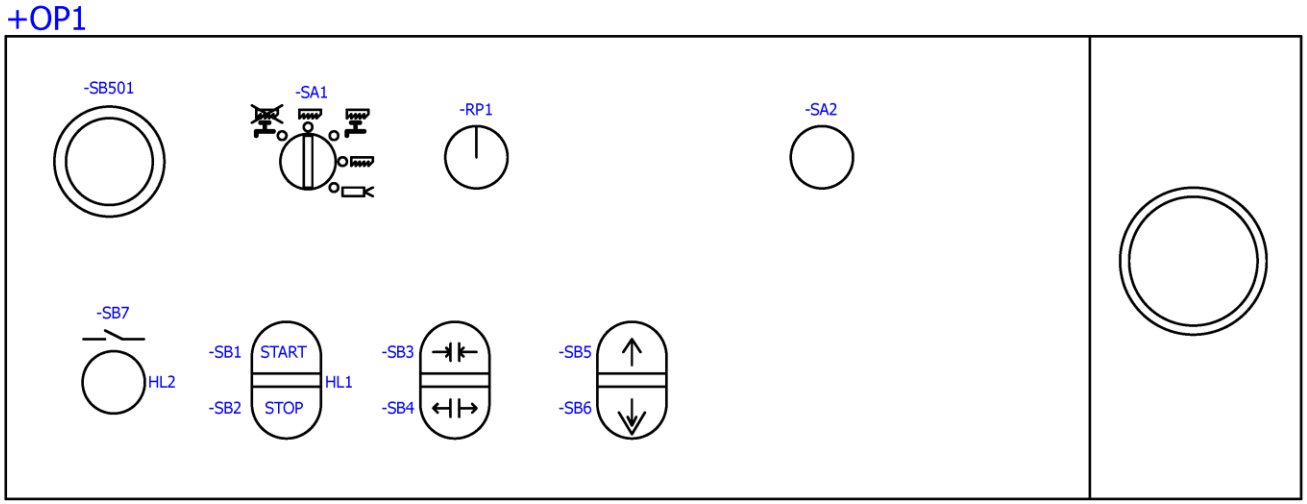

3.e

BOMAR, s.r.o. Těžební 1236/1 CZ 627 00, Brno	Stroj/Machine/Maschine: Proline 520.450 H SX	Název stránky/Name page/Name seiten: Ovládací panel OP1 / Control panel OP1 / Bedienpult OP1	Číslo dok./Doc.No/Anzahl der Dokumente.: ES-R4800-201/202-V2.5 Napájení/Power supply/Einspeinsung: 3x400V+PE, 50Hz Zpracoval/Processed /Hat verarbeitet: Kostka Datum/Date/Datum: 23.3.2016	List/Page/Seite: 4 Listů/Pages/Seiten: 23

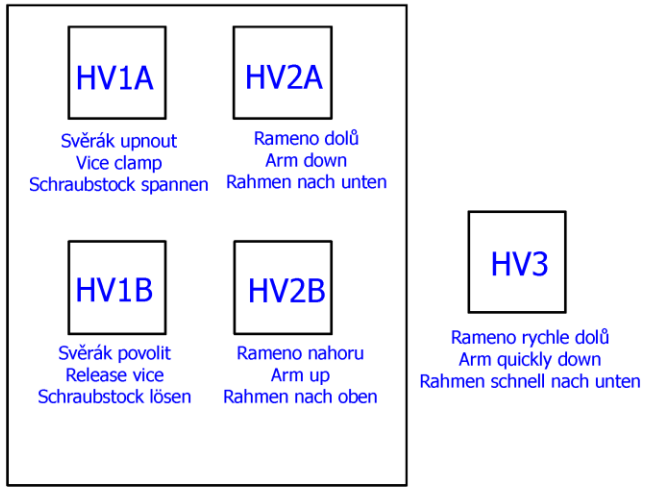

4

BOMAR, s.r.o. Těžební 1236/1 CZ 627 00, Brno	Stroj/Machine/Maschine: Proline 520.450 H SX	Název stránky/Name page/Name seiten: Rozmístění hydraulických ventilů / Placement of Hydraulic valves / Platzierung die Hydroventile Placement of elements in enclosure R1	Číslo dok./Doc.No/Anzahl der Dokumente.:	ES-R4800-201/202-V2.5	List/Page/Seite: 5
			Napájení/Power supply/Einspeinsung:	3x400V+PE, 50Hz	
			Zpracoval/Processed /Hat verarbeitet:	Kostka	Listů/Pages/Seiten: 23
			Datum/Date/Datum:	23.3.2016	

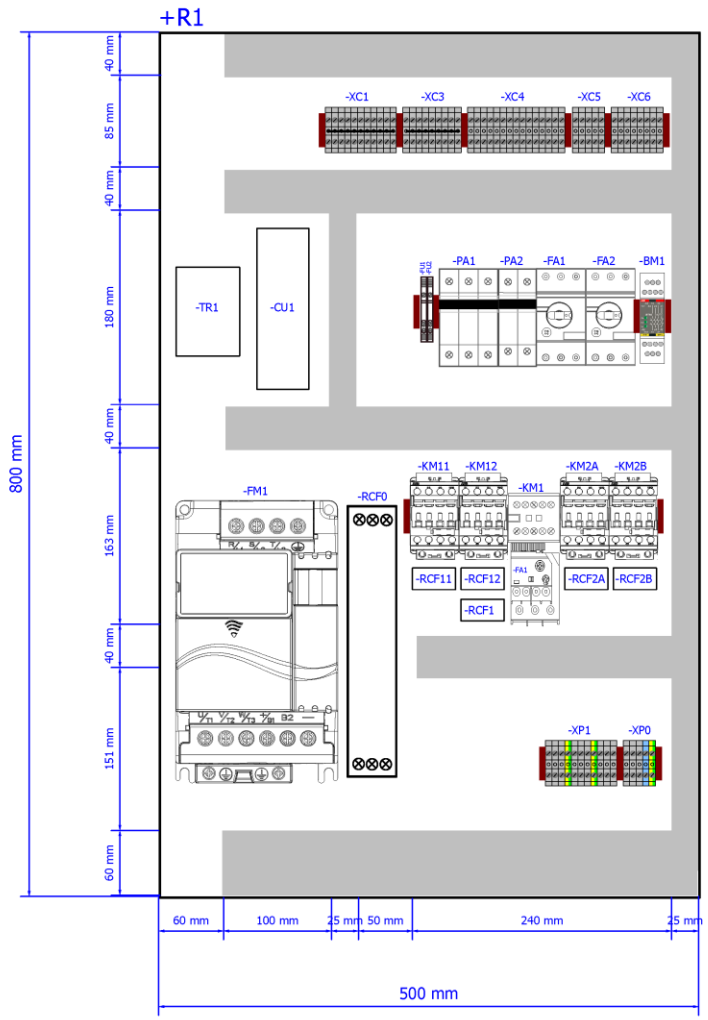

5

BOMAR, s.r.o. Těžební 1236/1 CZ 627 00, Brno	Stroj/Machine/Maschine: Proline 520.450 H SX	Název stránky/Name page/Name seiten: Rozmístění prvků v rozvaděči R1 / Placement of elements in enclosure R1 / Platzierung der Elemente im Schaltschrank R1 Placement of elements in	Číslo dok./Doc.No/Anzahl der Dokumente.: ES-R4800-201/202-V2.5 Napájení/Power supply/Einspeisung: 3x400V+PE, 50Hz Zpracoval/Processed /Hat verarbeitet: Kostka Datum/Date/Datum: 4.10.2016	List/Page/Seite: 6 Listů/Pages/Seiten: 23

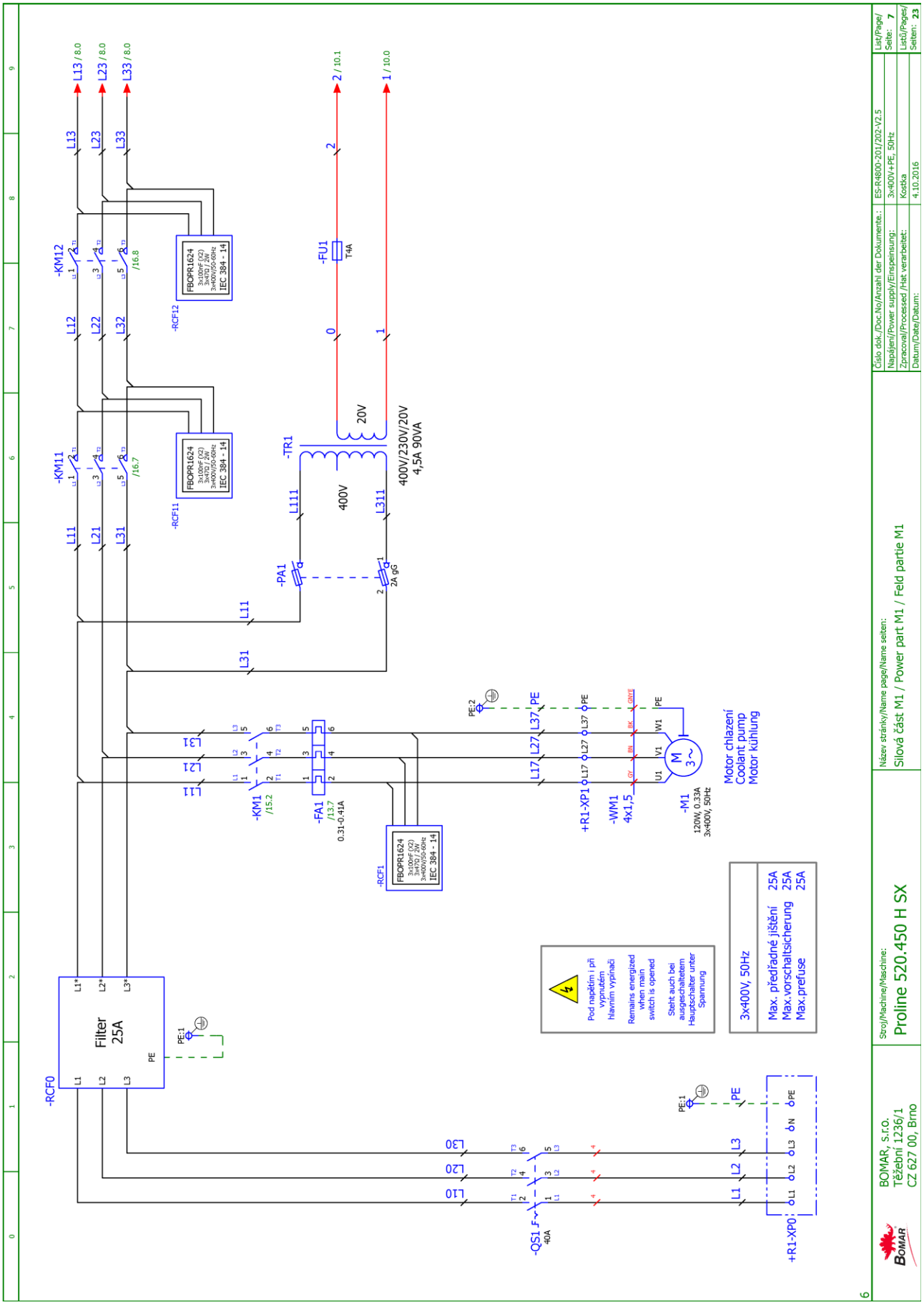
-RCF0
Filter
25A
L1*
L2*
L3*
PE
PE:1
-QS1 F
40A
L10
L20
L30
L1
L2
L3
+R1-XP0
-KM11
-KM12
L11
L21
L31
L12
L22
L32
L13 / 8.0
L23 / 8.0
L33 / 8.0
/16.7
/16.8
-RCF11
-RCF12
FBOPR1624
3x100nF (X2)
3x470Ω / 2W
3x400V/50-60Hz
IEC 384 - 14
-FU1
T4A
2 / 10.1
1 / 10.0
-TR1
20V
400V
400V/230V/20V
4,5A 90VA
L111
L311
-PA1
2A gG
-KM1
/15.2
-FA1
/13.7
0.31-0.41A
-RCF1
PE:2
L17
L27
L37
+R1-XP1
-WM1
4x1,5
-M1
120W, 0.33A
3x400V, 50Hz
Motor chlazení
Coolant pump
Motor kühlung
Pod napětím i při vypnutém hlavním vypínači
Remains energized when main switch is opened
Steht auch bei ausgeschaltetem Hauptschalter unter Spannung
3x400V, 50Hz
Max. předřadné jištění 25A
Max.vorschaltsicherung 25A
Max.preřuse 25A
BOMAR, S.r.o.
Těžební 1236/1
CZ 627 00, Brno
Stroj/Machine/Maschine:
Proline 520.450 H SX
Název stránky/Name page/Name seiten:
Silová část M1 / Power part M1 / Feld partie M1
Číslo dok./Doc.No/Anzahl der Dokumente.:
ES-R4800-201/202-V2.5
Napájení/Power supply/Einspeinsung:
3x400V+PE, 50Hz
Zpracoval/Processed /Hat verarbeitet:
Kostka
Datum/Date/Datum:
4.10.2016
List/Page/
Seite: 7
Listů/Pages/
Seiten: 23

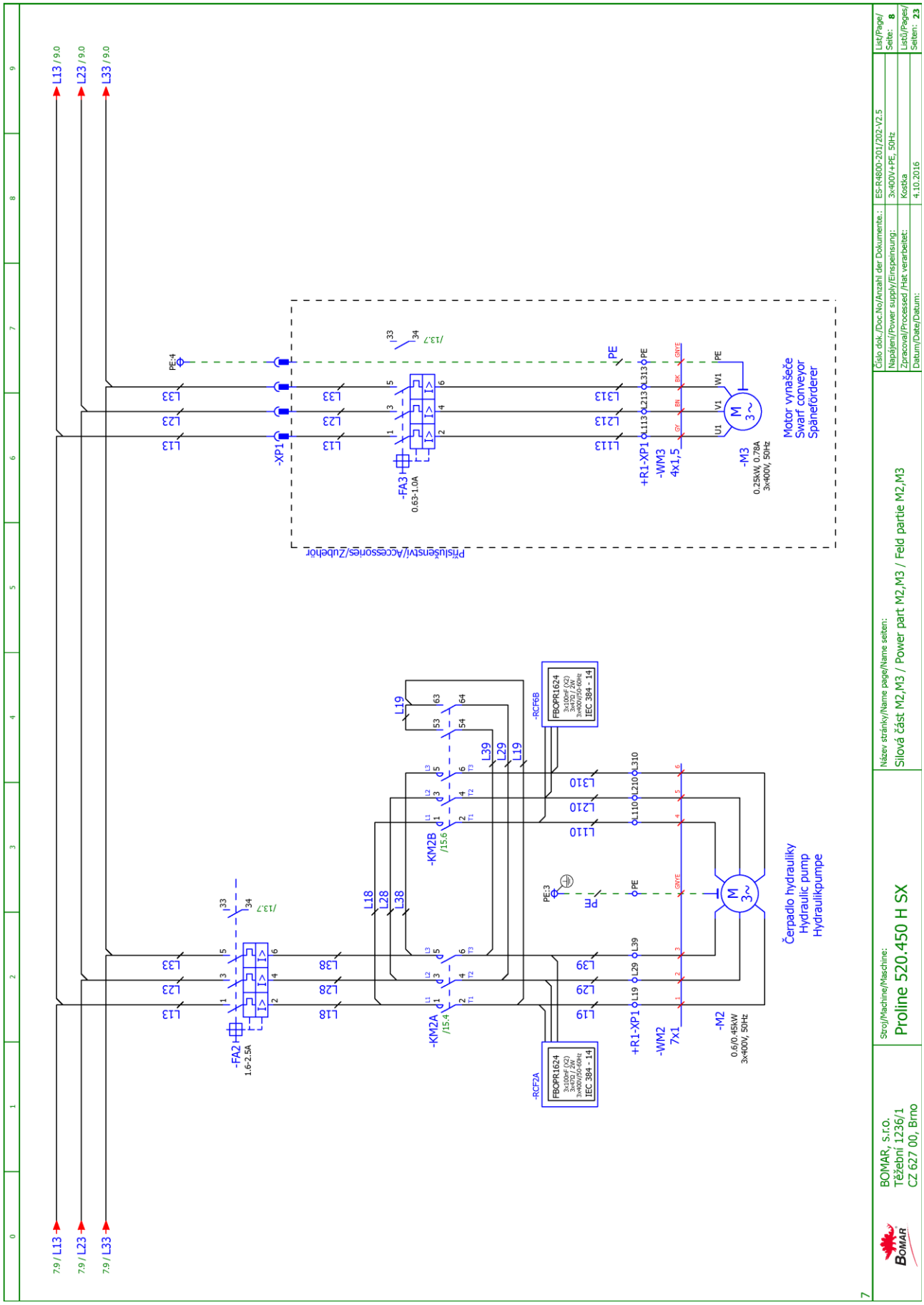
L13 / 9.0
L23 / 9.0
L33 / 9.0
7.9 / L13
7.9 / L23
7.9 / L33
PE:4
-XP1
-FA3
0.63-1.0A
/13.7
+R1-XP1
-WM3
4x1,5
-M3
0.25kW, 0.78A
3x400V, 50Hz
Motor vynašeče
Swarf conveyor
Späneförderer
Příslušenství/Accessories/Zubehör
-FA2
1.6-2.5A
-KM2A
/15.4
-KM2B
/15.6
-RCF2A
-RCF6B
FBOPR1624
IEC 384 - 14
PE:3
+R1-XP1
-WM2
7x1
-M2
0.6/0.45kW
3x400V, 50Hz
Čerpadlo hydrauliky
Hydraulic pump
Hydraulikpumpe
Číslo dok./Doc.No/Anzahl der Dokumente.: ES-R4800-201/202-V2.5
Napájení/Power supply/Einspeisung: 3x400V+PE, 50Hz
Zpracoval/Processed /Hat verarbeitet: Kostka
Datum/Date/Datum: 4.10.2016
List/Page/Seite: 8
Listů/Pages/Seiten: 23
Název stránky/Name page/Name seiten:
Silová část M2,M3 / Power part M2,M3 / Feld partie M2,M3
Stroj/Machine/Maschine:
Proline 520.450 H SX
BOMAR, s.r.o.
Těžební 1236/1
CZ 627 00, Brno

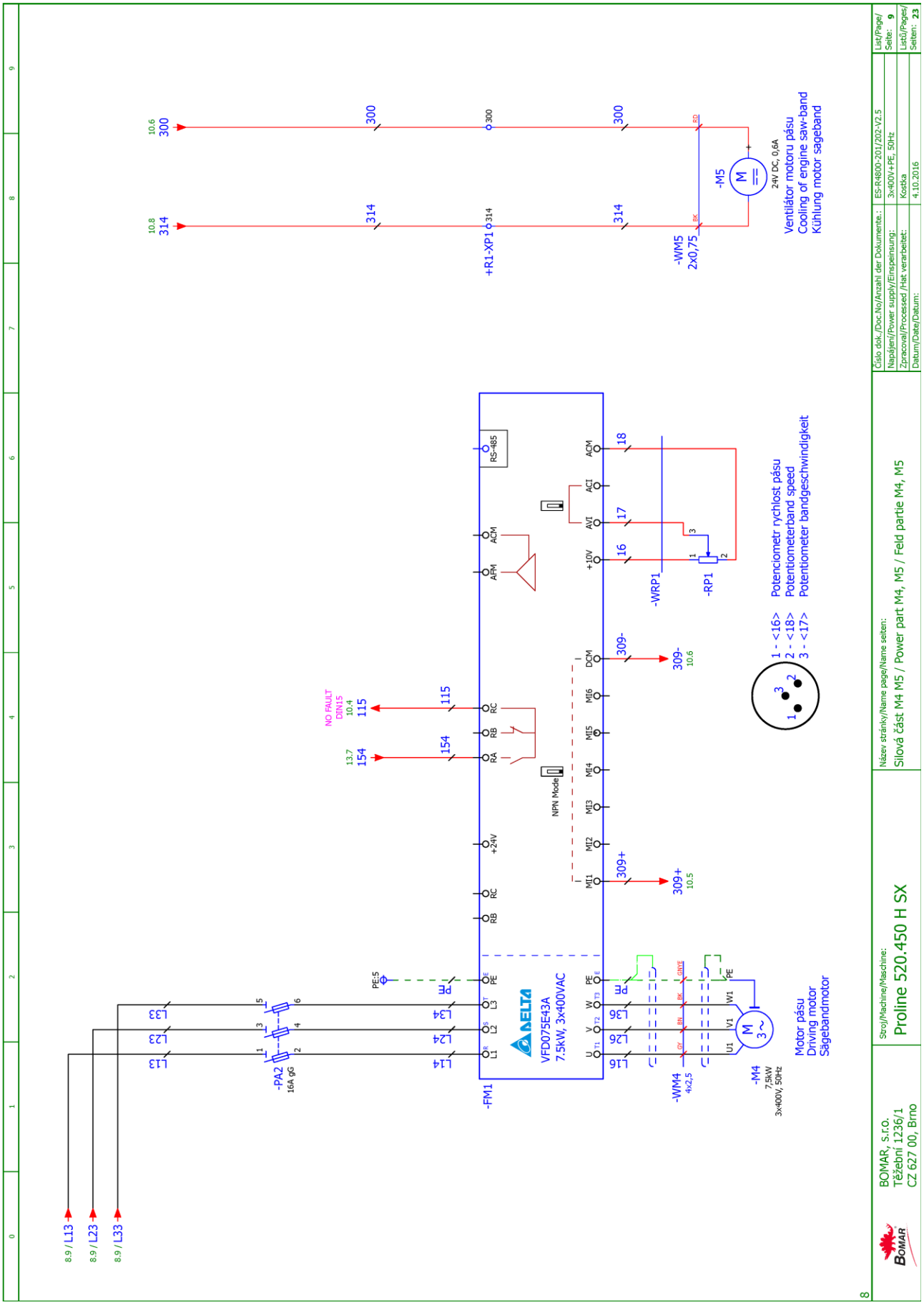
8.9 / L13
8.9 / L23
8.9 / L33
-PA2
16A gG
-FM1
VFD075E43A
7.5kW, 3x400VAC
DELTA
PE:5
NO FAULT
DIN15
10.4
115
13.7
154
NPN Mode
RS-485
-WM4
4x2,5
-M4
7,5kW
3x400V, 50Hz
Motor pásu
Driving motor
Sägebandmotor
-WRP1
-RP1
1 - <16> Potenciometr rychlost pásu
2 - <18> Potentiometerband speed
3 - <17> Potentiometer bandgeschwindigkeit
309+
10.5
309-
10.6
+R1-XP1
-WM5
2x0,75
-M5
24V DC, 0,6A
Ventilátor motoru pásu
Cooling of engine saw-band
Kühlung motor sageband
10.6
300
10.8
314
BOMAR, s.r.o.
Těžební 1236/1
CZ 627 00, Brno
Stroj/Machine/Maschine:
Proline 520.450 H SX
Název stránky/Name page/Name seiten:
Silová část M4 M5 / Power part M4, M5 / Feld partie M4, M5
Číslo dok./Doc.No/Anzahl der Dokumente.:
ES-R4800-201/202-V2.5
Napájení/Power supply/Einspeisung:
3x400V+PE, 50Hz
Zpracoval/Processed /Hat verarbeitet:
Kostka
Datum/Date/Datum:
4.10.2016
List/Page/
Seite: 9
Listů/Pages/
Seiten: 23

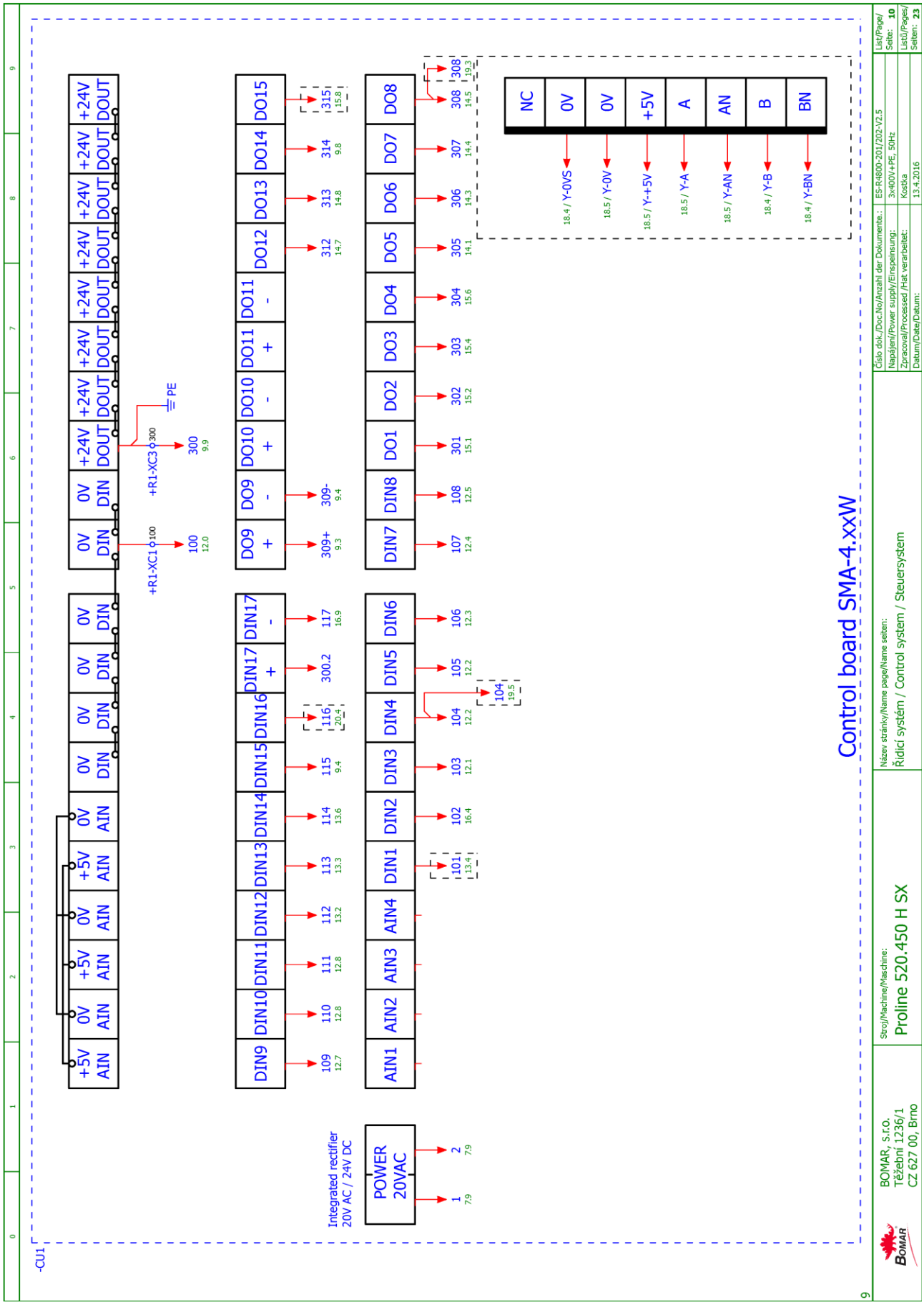

Schémata
Schemas
Schematics

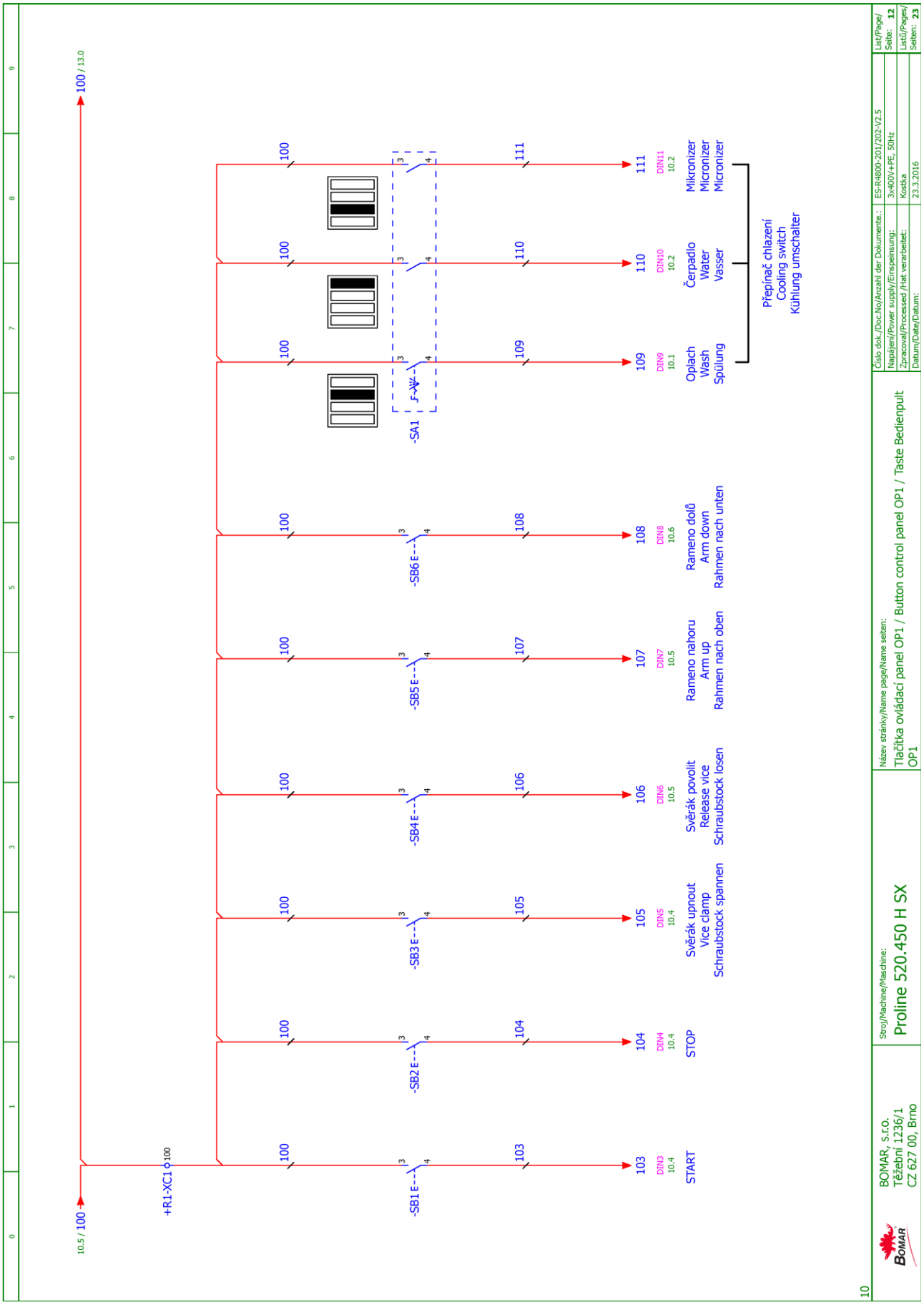
10.5 / 100
100 / 13.0
+R1-XC1 100
-SB1 E
-SB2 E
-SB3 E
-SB4 E
-SB5 E
-SB6 E
-SA1
103 DIN3 10.4 START
104 DIN4 10.4 STOP
105 DIN5 10.4 Svěrák upnout Vice clamp Schraubstock spannen
106 DIN6 10.5 Svěrák povolit Release vice Schraubstock losen
107 DIN7 10.5 Rameno nahoru Arm up Rahmen nach oben
108 DIN8 10.6 Rameno dolů Arm down Rahmen nach unten
109 DIN9 10.1 Oplach Wash Spülung
110 DIN10 10.2 Čerpadlo Water Vasser
111 DIN11 10.2 Mikronizer Micronizer Micronizer
Přepínač chlazení Cooling switch Kühlung umschalter
BOMAR, s.r.o. Těžební 1236/1 CZ 627 00, Brno
Stroj/Machine/Maschine: Proline 520.450 H SX
Název stránky/Name page/Name seiten: Tlačítka ovládací panel OP1 / Button control panel OP1 / Taste Bedienpult OP1
Číslo dok./Doc.No/Anzahl der Dokumente.: ES-R4800-201/202-V2.5
Napájení/Power supply/Einspeinsung: 3x400V+PE, 50Hz
Zpracoval/Processed /Hat verarbeitet: Kostka
Datum/Date/Datum: 23.3.2016
List/Page/Seite: 12
Listů/Pages/Seiten: 23
10

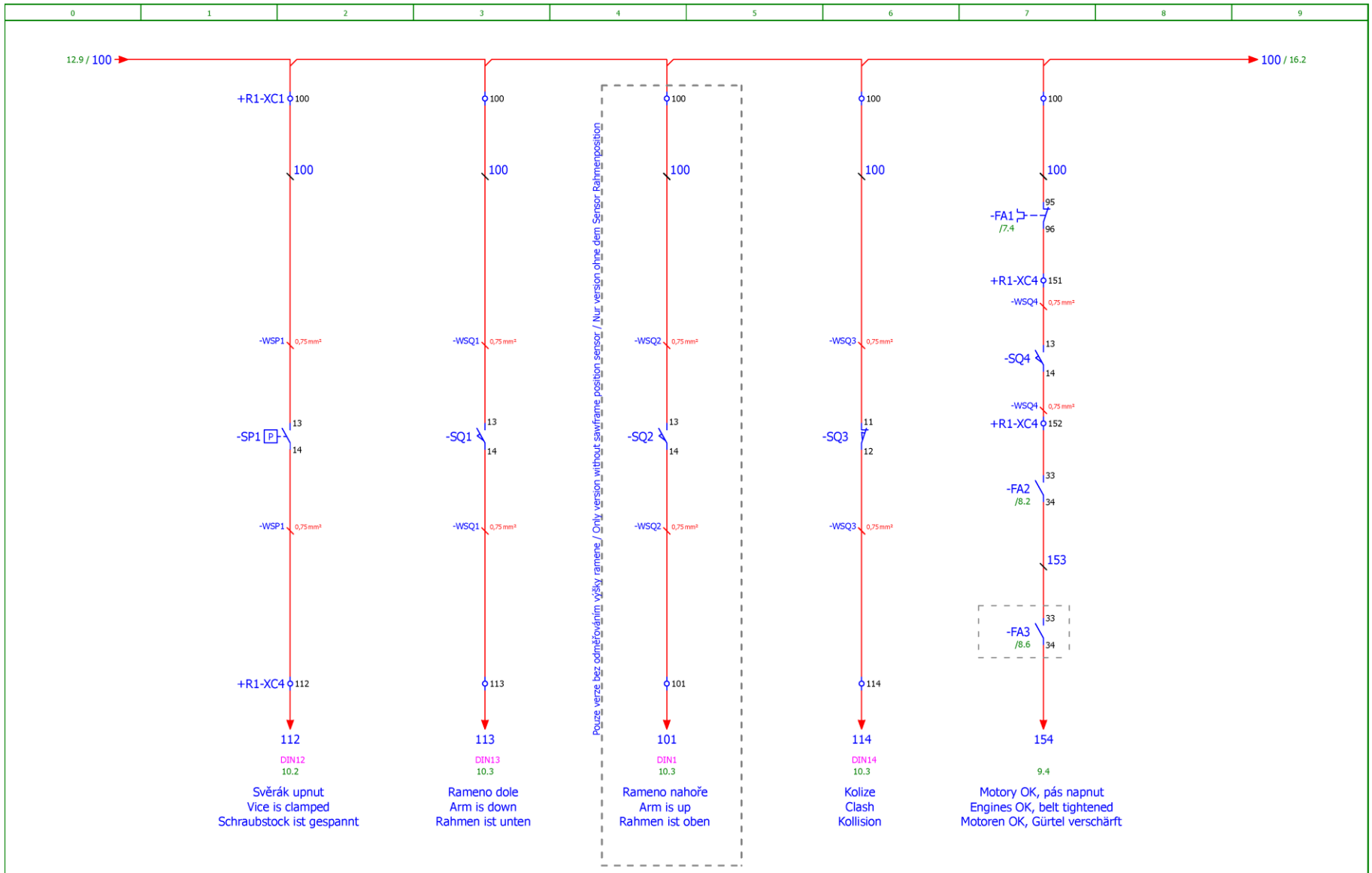

12

BOMAR, s.r.o. Těžební 1236/1 CZ 627 00, Brno	Stroj/Machine/Maschine: Proline 520.450 H SX	Název stránky/Name page/Name seiten: Vstupy / Inputs / Eingänge	Číslo dok./Doc.No/Anzahl der Dokumente.: ES-R4800-201/202-V2.5 Napájení/Power supply/Einspeisung: 3x400V+PE, 50Hz Zpracoval/Processed /Hat verarbeitet: Kostka Datum/Date/Datum: 4.10.2016	List/Page/Seite: 13 Listů/Pages/Seiten: 23

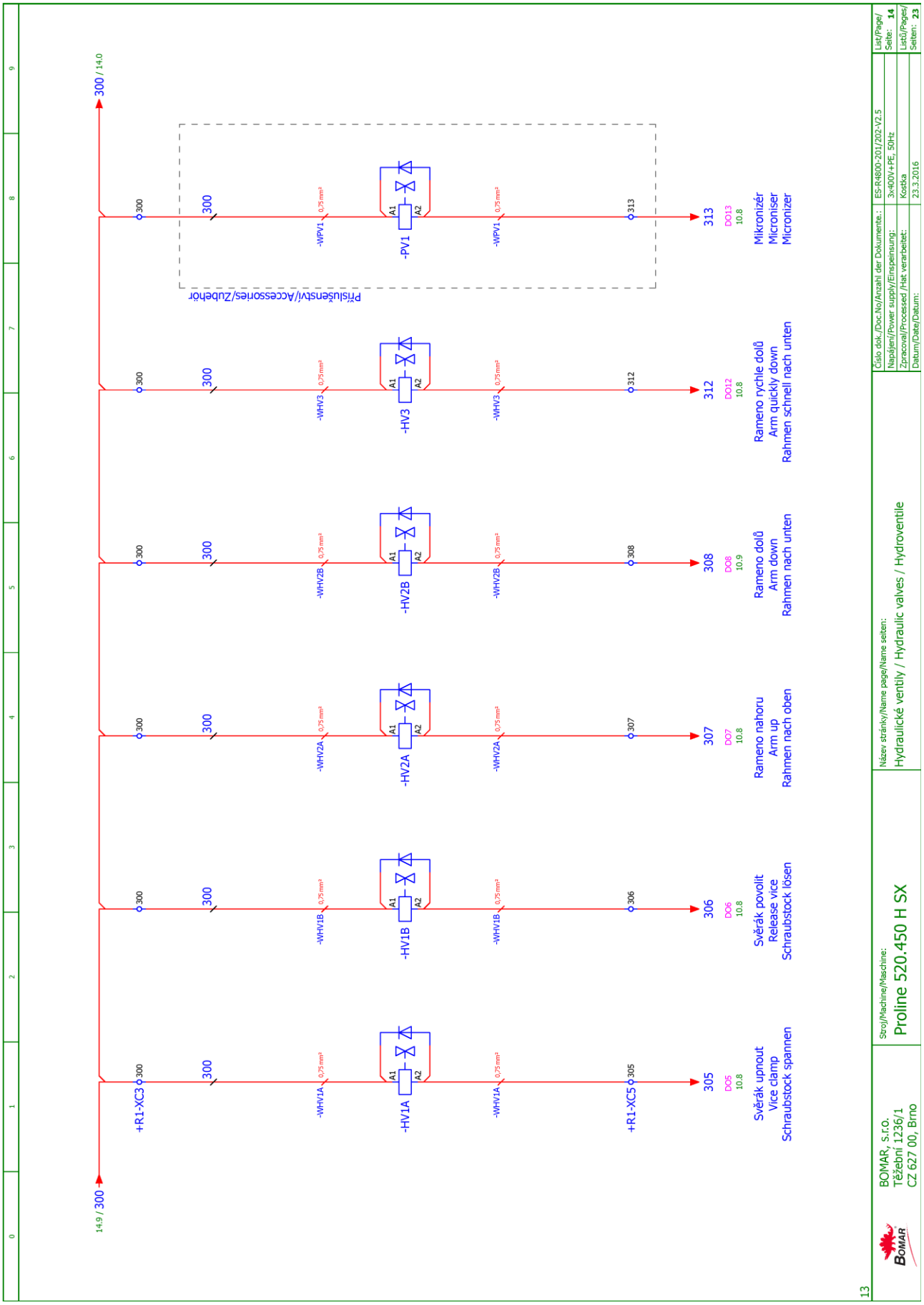
14.9 / 300
300 / 14.0
+R1-XC3
-WHV1A
-HV1A
-WHV1B
-HV1B
-WHV2A
-HV2A
-WHV2B
-HV2B
-WHV3
-HV3
-WPV1
-PV1
Příslušenství/Accessories/Zubehör
+R1-XC5
305
306
307
308
312
313
DO5 10.8
DO6 10.8
DO7 10.8
DO8 10.9
DO12 10.8
DO13 10.8
Svěrák upnout
Vice clamp
Schraubstock spannen
Svěrák povolit
Release vice
Schraubstock lösen
Rameno nahoru
Arm up
Rahmen nach oben
Rameno dolů
Arm down
Rahmen nach unten
Rameno rychle dolů
Arm quickly down
Rahmen schnell nach unten
Mikronizér
Microniser
Micronizer
BOMAR, s.r.o.
Těžební 1236/1
CZ 627 00, Brno
Stroj/Machine/Maschine:
Proline 520.450 H SX
Název stránky/Name page/Name seiten:
Hydraulické ventily / Hydraulic valves / Hydroventile
Číslo dok./Doc.No/Anzahl der Dokumente.:
ES-R4800-201/202-V2.5
Napájení/Power supply/Einspeinsung:
3x400V+PE, 50Hz
Zpracoval/Processed /Hat verarbeitet:
Kostka
Datum/Date/Datum:
23.3.2016
List/Page/
Seite: 14
Listů/Pages/
Seiten: 23
13

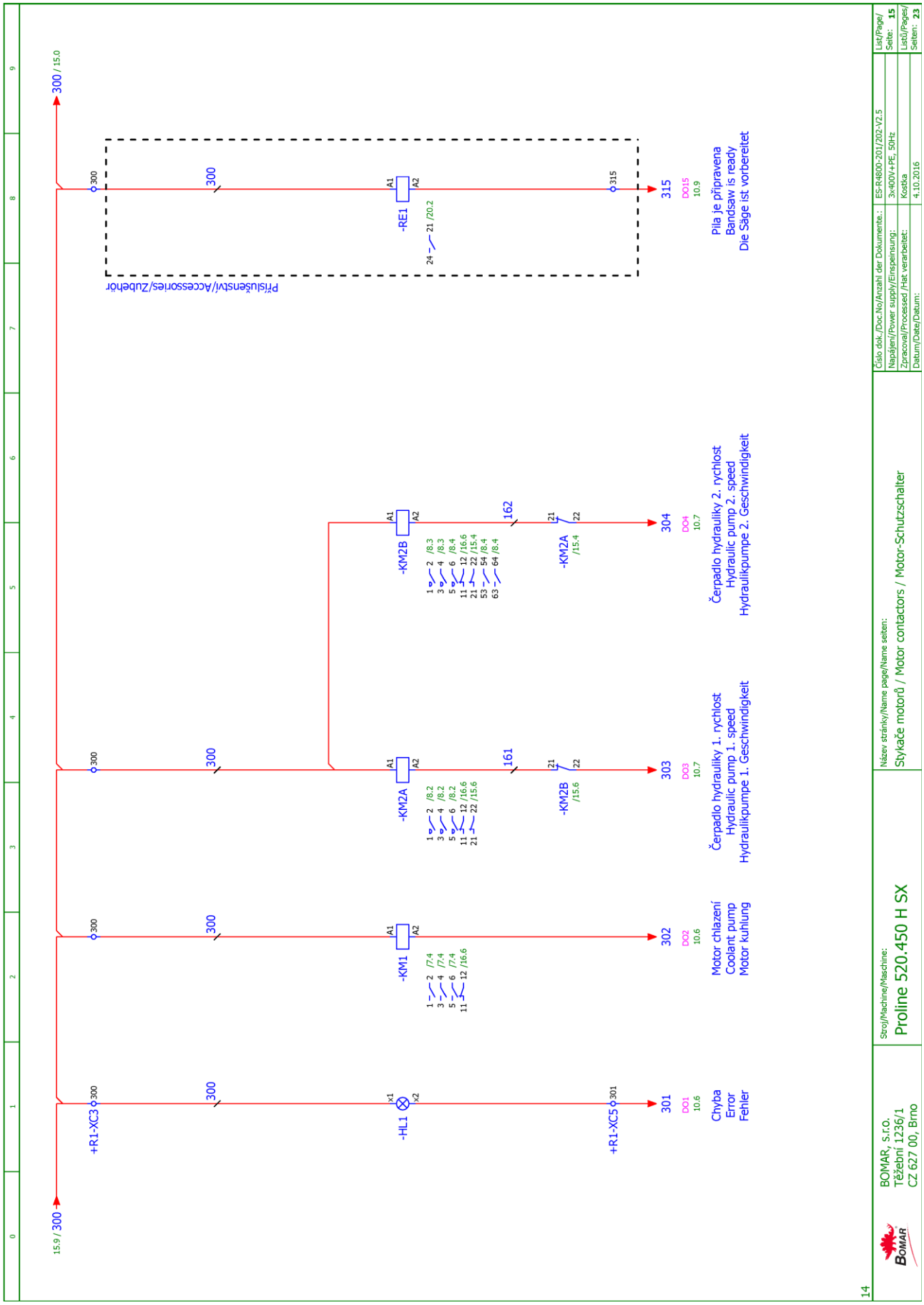
15.9 / 300
300 / 15.0
+R1-XC3
-HL1
+R1-XC5
-KM1
-KM2A
-KM2B
-RE1
Příslušenství/Accessories/Zubehör
Chyba
Error
Fehler
Motor chlazení
Coolant pump
Motor kühlung
Čerpadlo hydrauliky 1. rychlost
Hydraulic pump 1. speed
Hydraulikpumpe 1. Geschwindigkeit
Čerpadlo hydrauliky 2. rychlost
Hydraulic pump 2. speed
Hydraulikpumpe 2. Geschwindigkeit
Pila je připravena
Bandsaw is ready
Die Säge ist vorbereitet
Číslo dok./Doc.No/Anzahl der Dokumente.: ES-R4800-201/202-V2.5
Napájení/Power supply/Einspeisung: 3x400V+PE, 50Hz
Zpracoval/Processed /Hat verarbeitet: Kostka
Datum/Date/Datum: 4.10.2016
List/Page/Seite: 15
Listů/Pages/Seiten: 23
Název stránky/Name page/Name seiten:
Stykače motorů / Motor contactors / Motor-Schutzschalter
Stroj/Machine/Maschine:
Proline 520.450 H SX
BOMAR, s.r.o.
Těžební 1236/1
CZ 627 00, Brno
14

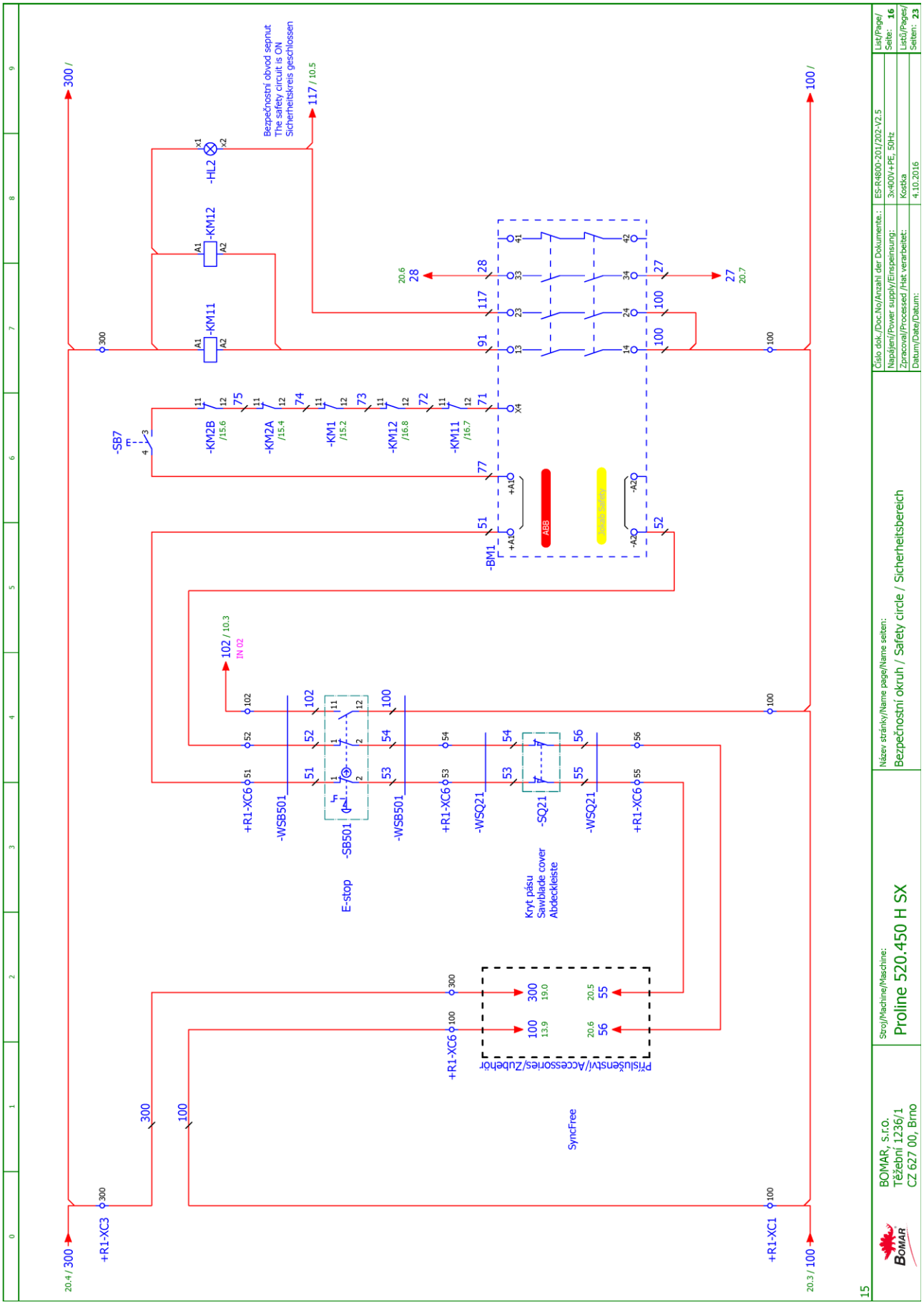
Bezpečnostní obvod sepnut
The safety circuit is ON
Sicherheitskreis geschlossen
-HL2
-KM12
-KM11
-SB7
-KM2B /15.6
-KM2A /15.4
-KM1 /15.2
-KM12 /16.8
-KM11 /16.7
-BM1
ABB
Safety
+R1-XC6
-WSB501
-SB501
E-stop
-SQ21
Kryt pásu
Sawblade cover
Abdeckleiste
-WSQ21
Příslušenství/Accessories/Zubehör
SyncFree
+R1-XC3
+R1-XC1
Název stránky/Name page/Name seiten:
Bezpečnostní okruh / Safety circle / Sicherheitsbereich
Stroj/Machine/Maschine:
Proline 520.450 H SX
BOMAR, s.r.o.
Třešební 1236/1
CZ 627 00, Brno
Číslo dok./Doc.No/Anzahl der Dokumente.:
ES-R4800-201/202-V2.5
Napájení/Power supply/Einspeisung:
3x400V+PE, 50Hz
Zpracoval/Processed /Hat verarbeitet:
Kostka
Datum/Date/Datum:
4.10.2016
List/Page/Seite: 16
Listů/Pages/Seiten: 23
15

Pouze verze s odměřováním výšky ramene/Only version with sawframe position sensor/Nur version mit dem Sensor Rahmenposition

SN1

Snímač výšky ramene Sawframe position sensor Rahmenposition Sensor		Kabel HELU-Flexi 7x0.14
+	HNĚDÁ BROWN BRAUN	HNĚDÁ+MODRÁ BROWN+BLUE BRAU+BLAU
-	SEDÁ GREY GRAU	SEDÁ GREY GRAU
A	RUZOVA PINK ROSAROT	ŽLUTÁ YELLOW GELB
AN	ZELENÁ GREEN GRÜN	RŮŽOVÁ PINK ROSA
B	ŽLUTÁ YELLOW GELB	BÍLÁ WHITE WEIS
BN	BÍLÁ WHITE WEIS	ZELENÁ GREEN GRÜN
	ČERNÁ BLACK SCHWARZ	STÍNĚNÍ SHIELD LEITUNGSSCHIRM

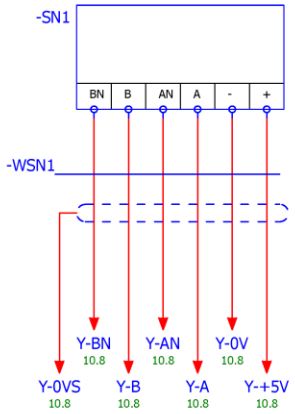

16

BOMAR, s.r.o. Těžební 1236/1 CZ 627 00, Brno	Stroj/Machine/Maschine: Proline 520.450 H SX	Název stránky/Name page/Name seiten: Snímač výšky ramene / Sawframe position sensor / Rahmenposition sensor	Číslo dok./Doc.No/Anzahl der Dokumente.: ES-R4800-201/202-V2.5 Napájení/Power supply/Einspeinsung: 3x400V+PE, 50Hz Zpracoval/Processed /Hat verarbeitet: Kostka Datum/Date/Datum: 23.3.2016	List/Page/Seite: 18 Listů/Pages/Seiten: 23

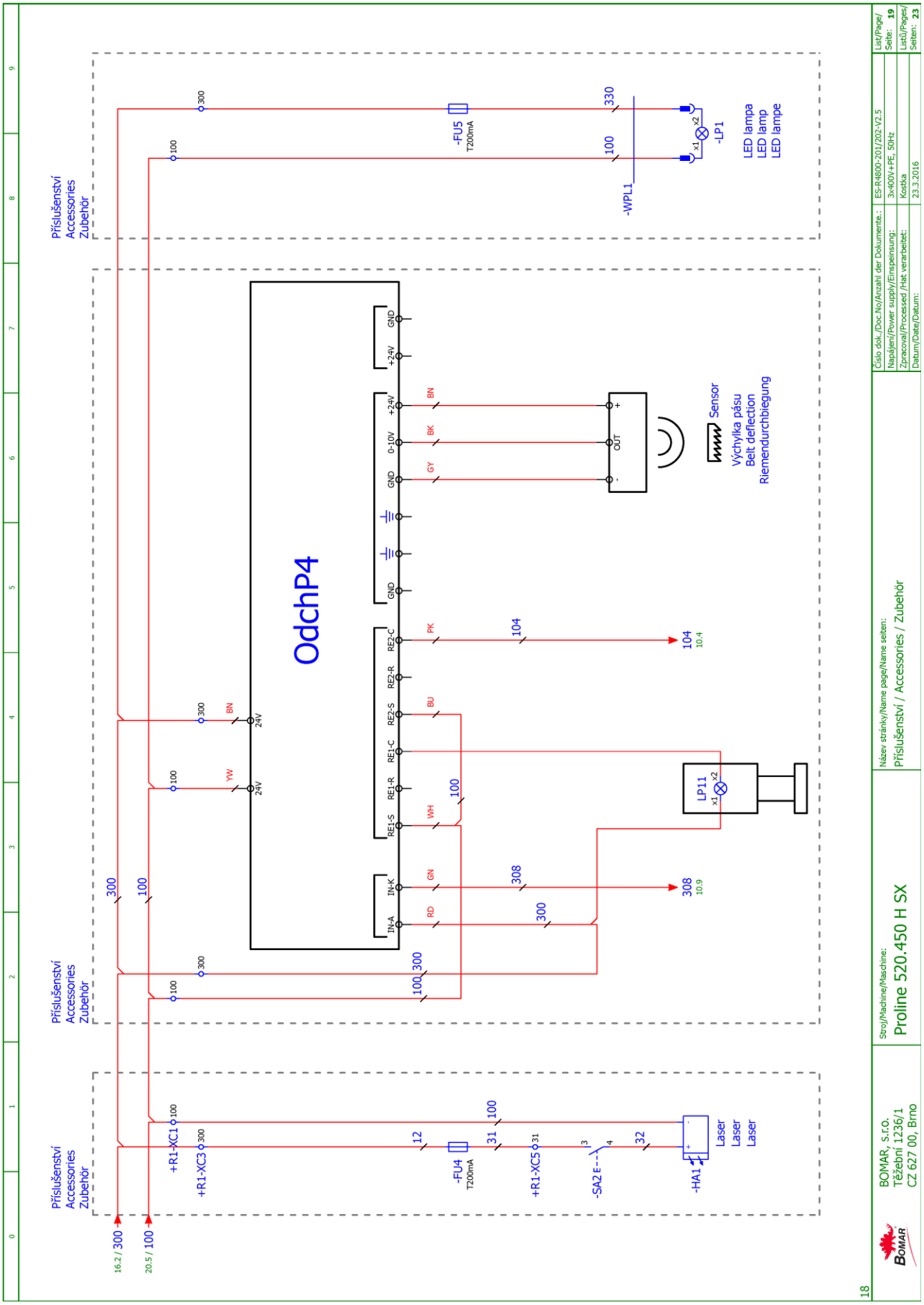
Příslušenství
Accessories
Zubehör
OdchP4
IN-A
IN-K
RE1-S
RE1-R
RE1-C
RE2-S
RE2-R
RE2-C
GND
0-10V
+24V
+24V
GND
RD
GN
WH
BU
PK
GY
BK
BN
YW
BN
24V
24V
-FU5
T200mA
-WPL1
-LP1
LED lampa
LED lamp
LED lampe
Sensor
Výchylka pásu
Belt deflection
Riemendurchbiegung
OUT
LP11
+R1-XC1
+R1-XC3
-FU4
T200mA
+R1-XC5
-SA2
-HA1
Laser
Laser
Laser
16.2 / 300
20.5 / 100
Číslo dok./Doc.No/Anzahl der Dokumente.:
ES-R4800-201/202-V2.5
List/Page/Seite: 19
Napájení/Power supply/Einspeisung:
3x400V+PE, 50Hz
Listů/Pages/Seiten: 23
Zpracoval/Processed /Hat verarbeitet:
Kostka
Datum/Date/Datum:
23.3.2016
Název stránky/Name page/Name seiten:
Příslušenství / Accessories / Zubehör
Stroj/Machine/Maschine:
Proline 520.450 H SX
BOMAR, s.r.o.
Těžební 1236/1
CZ 627 00, Brno
18

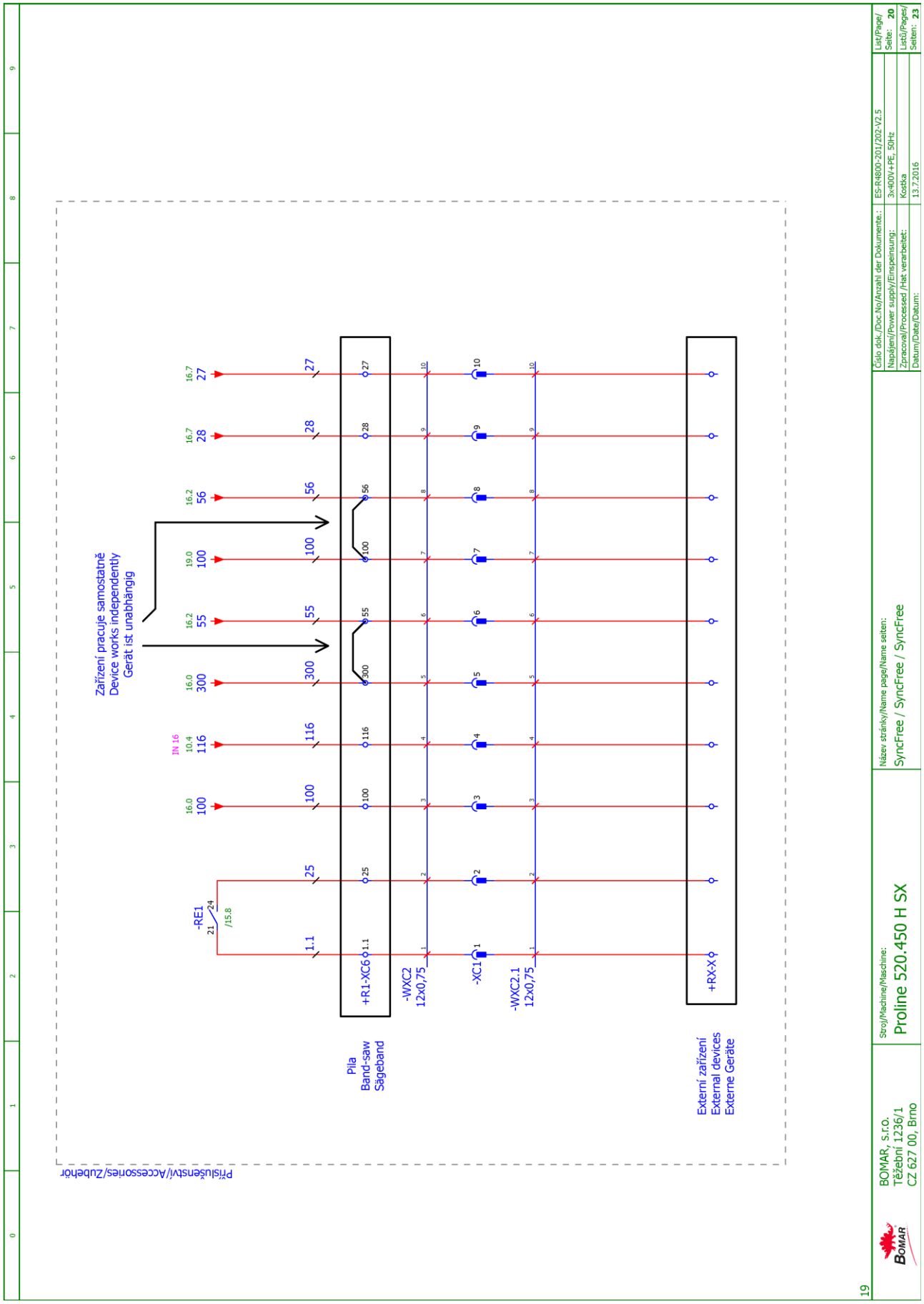

Schémata
Schemas
Schematics

6.2.2. 3×230 V + PE, 50 Hz

Obsah / Table of contents / Inhalt

Strana Page Seite	Název strany Page name Seitenname	Datum Date Datum
1	Úvodní strana / Start page / Startseite	13.7.2016
2	Obsah / Table of contents / Inhaltsverzeichnis	4.10.2016
3	Kusovník artiklů / Parts list / Artikelstückliste	4.10.2016
3.a	Kusovník artiklů / Parts list / Artikelstückliste	4.10.2016
3.b	Kusovník artiklů / Parts list / Artikelstückliste	4.10.2016
3.c	Kusovník artiklů / Parts list / Artikelstückliste	4.10.2016
3.d	Kusovník artiklů / Parts list / Artikelstückliste	4.10.2016
3.e	Kusovník artiklů / Parts list / Artikelstückliste	4.10.2016
4	Rozmístění prvků v rozvaděči R1 / Placement of elements in enclosure R1 / Platzierung der Elemente im Schaltschrank R1	4.10.2016
5	Ovládací panel OP1 / Control panel OP1 / Bedienpult OP1	23.3.2016
6	Rozmístění hydraulických ventilů / Placement of Hydraulic valves / Platzierung die Hydroventile	23.3.2016
7	Silová část M1 / Power part M1 / Feld partie M1	4.10.2016
8	Silová část M2, M3 / Power part M2, M3 / Feld partie M2, M3	4.10.2016
9	Silová část M4, M5 / Power part M4, M5 / Feld partie M4, M5	4.10.2016
10	Řidicí systém / Control system / Steuersystem	4.10.2016
12	Tlačítka ovládací panel OP1 / Button control panel OP1 / Taste Bedienpult OP1	23.3.2016
13	Vstupy / Inputs / Eingänge	4.10.2016
14	Hydraulické ventily / Hydraulic valves / Hydroventile	23.3.2016
15	Stykače motorů / Motor contactors / Motor-Schutzschalter	4.10.2016
16	Bezpečnostní okruh / Safety circle / Sicherheitsbereich	4.10.2016
18	Snímač výšky ramene / Sawframe position sensor / Rahmenposition sensor	23.3.2016
19	Příslušenství / Accessories / Zubehör	23.3.2016
20	SyncFree / SyncFree / SyncFree	13.7.2016

Kusovník artiklů / Parts list / Stückliste

Označení přístroje Device identification Geräteidentifikation	Typ přístroje Device description Gerätebeschreibung	Objednací číslo Type number Typennummer	Výrobce Manufacturer Hersteller	Skladové číslo Part number Lagernummer	Množství Quantity Menge	Umístění Location Stelle
-BM1	Bezpečnostní relé 24VDC, 3NO Safety relay 24VDC, 3NO Sicherheitsrelais 24VDC, 3NO	BT50	ABB	91.051.063	1	/16.5
-FA2	Pomocné kontakty - 1xNO+1xNC Auxiliary contacts - 1xNO+1xNC Hilfskontakte - 1xNO+1xNC	HKF1-11	ABB	91.046.002	1	/8.2
-FA3	Pomocné kontakty - 1xNO+1xNC Auxiliary contacts - 1xNO+1xNC Hilfskontakte - 1xNO+1xNC	HKF1-11	ABB	91.046.002	1	/8.6
-HL1	Signálka LED červená na adaptér Red LED light for adapter Red LED-Licht für Adapter	M22-LED-R	EATON	91.061.027	1	/15.1
-KM2A	Stykač - 4kW/400V, 3P Contactor - 4kW/400V, 3P Schütz - 4 kW / 400V, 3P	AF09-30-01-11	ABB	91.040.047	1	/15.4
-KM2A	Mechanické blokování Mechanical interlock unit Mechanische Interlockeinheit	VM4	ABB	91.041.045	1	/15.4
-KM2B	Stykač - 4kW/400V, 3P Contactor - 4kW/400V, 3P Schütz - 4 kW / 400V, 3P	AF09-30-01-11	ABB	91.040.047	1	/15.6
-KM2B	Pomocný kontakt - 1xNO Auxiliary contact - 1xNO Hilfskontakt - 1xNO	CA4-10	ABB	91.041.044	2	/15.6
-SA1	Hlavice s otočným přepínačem - 4 polohy Head with rotary switch - 4 positions Kopf mit Drehschalter - 4 Positionen	M22 - WRK4	EATON	91.060.087	1	/12.7
-FU1	Pojistka trubičková - 4A/250V, pomalá, 5x20 Tube fuse - 4A/250V, slow, 5x20 Rohrsicherung - 4A / 250V, langsam, 5x20	T4A/250V	ESKA	91.230.015	1	/7.8
-RP1	Potenciometr 4k7 Potenciometer 4k7 Potentiometer 4k7	TP195 4k7/N20A	Elektronické součástky CZ, a.s	91.283.015	1	/9.5
-M5	Ventilátor 24VDC, 154CFM Fan 24VDC, 154CFM Fan 24VDC, 154CFM	RDH1238 B2	Xinruilian Electronic Co.	91.015.126	1	/9.8

The manufacturer reserves right to use an equivalent replacement device.

2

Kusovník artiklů / Parts list / Stückliste

Označení přístroje Device identification Geräteidentifikation	Typ přístroje Device description Gerätebeschreibung	Objednací číslo Type number Typennummer	Výrobce Manufacturer Hersteller	Skladové číslo Part number Lagernummer	Množství Quantity Menge	Umístění Location Stelle
-FA1	Tepelné relé - 0.74A Thermal relay - 0.74A Thermische Relais - 0.74A	T16-0,74	ABB	91.050.021	1	/7.4
-RP1	Hlavice potenciometru - 24mm Head of potentiometer 24mm Leiter Potentiometer 24mm	S8877 BLK	GES-ELECTRONICS, a.s.	91.060.063	1	/9.5
-RCF1	Filtr RFC vývodový Efferent RFC filter Ableitenden RFC Filter	FBOPR1624	Ing. Miroslav Vlček	91.041.015	1	/7.3
-RCF2A	Filtr RFC vývodový Efferent RFC filter Ableitenden RFC Filter	FBOPR1624	Ing. Miroslav Vlček	91.041.015	1	/8.1
-RCF6B	Filtr RFC vývodový Efferent RFC filter Ableitenden RFC Filter	FBOPR1624	Ing. Miroslav Vlček	91.041.015	1	/8.4
-RCF11	Filtr RFC vývodový Efferent RFC filter Ableitenden RFC Filter	FBOPR1624	Ing. Miroslav Vlček	91.041.015	1	/7.6
-RCF12	Filtr RFC vývodový Efferent RFC filter Ableitenden RFC Filter	FBOPR1624	Ing. Miroslav Vlček	91.041.015	1	/7.7
-FA2	Motorový spouštěč - 2.5A Motor starter - 2.5A Motorstarter - 2.5A	MS116-2,5	ABB	91.045.021	1	/8.2
-FA3	Motorový spouštěč - 1.6A Motor starter - 1.6A Motorstarter - 1.6A	MS116-1,6	ABB	91.045.020	1	/8.6
-KM1	Ministýkač 4kW/400V Minicontactor 4kW/400V Minischutz 4kW/400V	B6S-30-01-1.7-71	ABB	91.040.049	1	/15.2
-KM2A	Pomocný kontakt - 1xNC Auxiliary contact - 1xNC Hilfskontakt - 1 xNC	CA4-01	ABB	91.041.043	1	/15.4
-KM2B	Pomocný kontakt - 1xNC Auxiliary contact - 1xNC Hilfskontakt - 1 xNC	CA4-01	ABB	91.041.043	1	/15.6

The manufacturer reserves right to use an equivalent replacement device.

3

Kusovník artiklů / Parts list / Stückliste

Označení přístroje Device identification Geräteidentifikation	Typ přístroje Device description Gerätebeschreibung	Objednací číslo Type number Typennummer	Výrobce Manufacturer Hersteller	Skladové číslo Part number Lagernummer	Množství Quantity Menge	Umístění Location Stelle
-KM11	Stýkač 11kW/400V Contactor 11kW/400V Schütz 11kW/400V	AF26-30-00-11	ABB	91.040.052	1	/16.7
-KM11	Pomocný kontakt - 1xNC Auxiliary contact - 1xNC Hilfskontakt - 1 xNC	CA4-01	ABB	91.041.043	1	/16.7
-KM12	Stýkač 5,5kW/400V Contactor 5,5kW/400V Schütz 5,5kW/400V	AF12-30-01-11	ABB	91.040.051	1	/16.8
-PA1	Pojistkový odpojovač E-90 - 2P Fuse disconnector E-90 - 2P Sicherungstrenner E90 - 2P	E 92/32	ABB	91.241.013	1	/7.5
-PA2	Pojistkový odpojovač E-930 - 3P Fuse breaker E-930 - 3P Lasttrennschalter E-930 - 3P	E 933/50	ABB	91.241.015	1	/9.1
-QS1	3 pólový odpínač, 63 A Disconnector - 3P, 63A Trennschalter - 3P, 63A	OT63FT3	ABB	91.170.110	1	/7.0
-RE1	Ministýkač 4kW/400V Minicontactor 4kW/400V Minischutz 4kW/400V	B6S-30-01-1.7-71	ABB	91.040.049	1	/15.8
-RP1	Svorka rychloupínací Fastconnect clamp Fast Connect Klemm	WAGO 224-112	WAGO	91.250.009	3	/9.5
-SA1	Upevňovací adaptér + 1NO Attaching adapter + 1NO Montageadapter + 1NO	M22-AK10	EATON	91.061.021	1	/12.7
-SA1	Kontaktní blok - 1NO Contact block - 1NO Kontaktblock - 1NO	M22-K10	EATON	91.061.022	2	/12.7
-SB1	Hlavice dvoutlačítka bílá/černá start/stop Double button head white/black start/stop Doppelrundkopf weiß/schwarz Start/Stopp	M22-DDL-WS-GB1/GB0	EATON	91.060.034	1	/12.1
-SB1	Upevňovací adaptér + 1NO Attaching adapter + 1NO Montageadapter + 1NO	M22-AK10	EATON	91.061.021	1	/12.1

The manufacturer reserves right to use an equivalent replacement device.

3.a

Kusovník artiklů / Parts list / Stückliste

Označení přístroje Device identification Geräteidentifikation	Typ přístroje Device description Gerätebeschreibung	Objednací číslo Type number Typennummer	Výrobce Manufacturer Hersteller	Skladové číslo Part number Lagernummer	Množství Quantity Menge	Umístění Location Stelle
-SB2	Kontaktní blok - 1NO Contact block - 1NO Kontaktblock - 1NO	M22-K10	EATON	91.061.022	1	/12.2
-SB3	Upevňovací adaptér + 1NO Attaching adapter + 1NO Montageadapter + 1NO	M22-AK10	EATON	91.061.021	1	/12.3
-SB3	Hlavice dvoutlačítka bílá/černá, zavřít/otevřít Double button head white/black, arrow close/open Doppelrundkopf weiß / schwarz, Pfeil Schließen / Öffnen	M22-DDL-WS-*	EATON	91.060.055	1	/12.3
-SB4	Kontaktní blok - 1NO Contact block - 1NO Kontaktblock - 1NO	M22-K10	EATON	91.061.022	1	/12.4
-SB5	Upevňovací adaptér + 1NO Attaching adapter + 1NO Montageadapter + 1NO	M22-AK10	EATON	91.061.021	1	/12.5
-SB5	Hlavice dvoutlačítka bílá/černá šipka nahoru/dolů Double button head white/black, arrow up/down Doppelrundkopf weiß / schwarz, Pfeil nach oben / unten	M22-DDL-WS-*-*	EATON	91.060.054	1	/12.5
-SB6	Kontaktní blok - 1NO Contact block - 1NO Kontaktblock - 1NO	M22-K10	EATON	91.061.022	1	/12.6
-SB7	Upevňovací adaptér + 1NO Attaching adapter + 1NO Montageadapter + 1NO	M22-AK10	EATON	91.061.021	1	/16.6
-SB7	Hlavice prosvětleného tlačítka žlutá Yellow trasparent switch Leiter beleuchtet gelbe Taste	M22-DL-Y	EATON	91.060.053	1	/16.6
-SB501	Total stop - hlavice + 3xNC Emergency-stop mushroom push - button + 3xNC Not-Aus-Pilz - Taster + 3 xNC	YW1B-V4E02R	IDEC	91.060.084	1	/16.4
-SB501	Kontakt - 1x NO Contact - 1x NO Kontakt - 1x NO	YW-E10	IDEC	91.061.044	1	/16.4
-TR1	Toroidní transformátor - 400V/230V/20V 4,5A 90VA Toroidal transformer - 400V / 230V / 20V 4,5A 90VA Ringkerntransformator - 400V / 230V / 20V 4,5A 90VA	400V/230V/20V 4,5A 90VA	KARBAN s.r.o.	91.080.023	1	/7.6

The manufacturer reserves right to use an equivalent replacement device.

3.b

Kusovník artiklů / Parts list / Stückliste

Označení přístroje Device identification Geräteidentifikation	Typ přístroje Device description Gerätebeschreibung	Objednací číslo Type number Typennummer	Výrobce Manufacturer Hersteller	Skladové číslo Part number Lagernummer	Množství Quantity Menge	Umístění Location Stelle
-SQ21	Bezpečnostní koncový spínač - 2xNC Safety Limit Switch - 2x NC Sicherheitsendschalter - 2x NC	QKS8	KEDU	91.173.012	1	/16.4
-PA1	Pojistka válcová - 2A, 10x38, pomalá Tube fuse - 2A, 10x38, slow Rohrsicherung - 2A, 10x38, langsam	PV10 2A gG	OEZ	91.230.034	2	/7.5
-PA2	Pojistka válcová - 40A, 14x51, rychlá, gG Cylindrical fuse - 40A, 14x51, fast, gG Zylindersicherungs - 40A, 14x51, schnell, gG	PV14 40A gG	OEZ	91.230.060	3	/9.1
-SQ4	Koncový spínač - 1NC+1NO Limit switch - 1NC+1NO Endschalter - 1NC+1NO	D4N-4A31	OMRON	91.173.007	1	/13.7
-SQ1	Koncový spínač - 1NO + 1NC, kladka, pomalá akce Limit switch - 1NO + 1NC, pulley, slow action Endschalter - 1NO + 1NC, rolle, langsame Einwirkung	FR 605-M2	PIZZATO	91.173.009	1	/13.3
-SQ2	Koncový spínač - 1NO + 1NC, kladka, pomalá akce Limit switch - 1NO + 1NC, pulley, slow action Endschalter - 1NO + 1NC, rolle, langsame Einwirkung	FR 615-M2	PIZZATO	91.173.044	1	/13.4
-SQ3	Koncový spínač - 1NO + 1NC, dlouhá nastavitelná kladka, M2, snap action Limit switch - 1NO + 1NC, long adjustable pulley, M2, snap action Endschalter - 1NO + 1NC, lange verstellbare rolle, M2, schnapp	FR 655-M2	PIZZATO	91.173.045	1	/13.6
-FM1	Frekvenční měnič - 7.5kW, 3x230VAC Frequency converter - 7.5kW, 3x230VAC Frequenzumrichter - 7,5kW, 3x230VAC	VFD075E23A	DELTA ELECTRONICS, INC.	91.012.136	1	/9.1
-QS1	Rukojeť odpínače 48x48mm - černá Handle switch 48x48mm - black Griffschalter 48x48mm - Schwarz	OHBS3PH	ABB	91.180.018	1	/7.0
-CU1	Řídící obvod Control unit Steuereinheit	SMA_4.01W	Bomar	265.918	1	/10.0
-RCF0	Odrušovací filtr 32A Noise filter 32A Rauschfilter 32A	32EB15/50/C2	WIDECOM TECHNOLOGY s.r.o.	91.041.066	1	/9.1
-FU1	Svorka pojistková Fuse terminal Sicherungsklemme	WK4/THSi5U	WIELAND	91.251.102	1	/7.8

The manufacturer reserves right to use an equivalent replacement device.

3.c

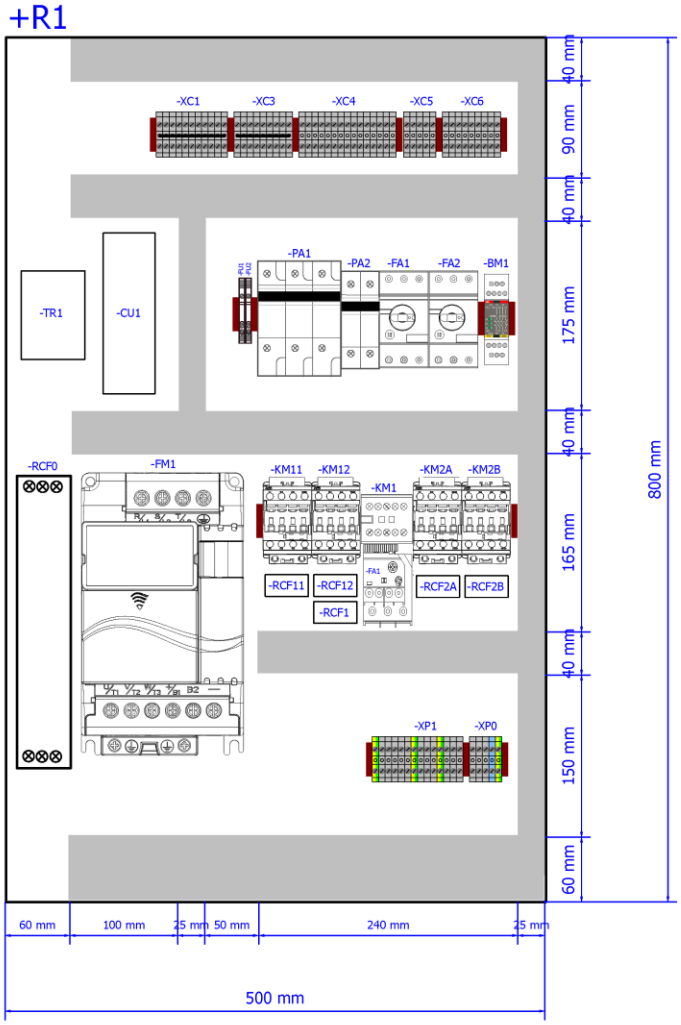

3.d

BOMAR, s.r.o. Těžební 1236/1 CZ 627 00, Brno	Stroj/Machine/Maschine: Proline 520.450 H SX	Název stránky/Name page/Name seiten: Rozmístění prvků v rozvaděči R1 / Placement of elements in enclosure R1 / Platzierung der Elemente im Schaltschrank R1	Číslo dok./Doc.No/Anzahl der Dokumente.:	ES-R4800-203-V2.5	List/Page/Seite: 4
			Napájení/Power supply/Einspeisung:	3x230V+PE, 50Hz	
			Zpracoval/Processed /Hat verarbeitet:	Kostka	Listů/Pages/Seiten: 22
			Datum/Date/Datum:	4.10.2016	

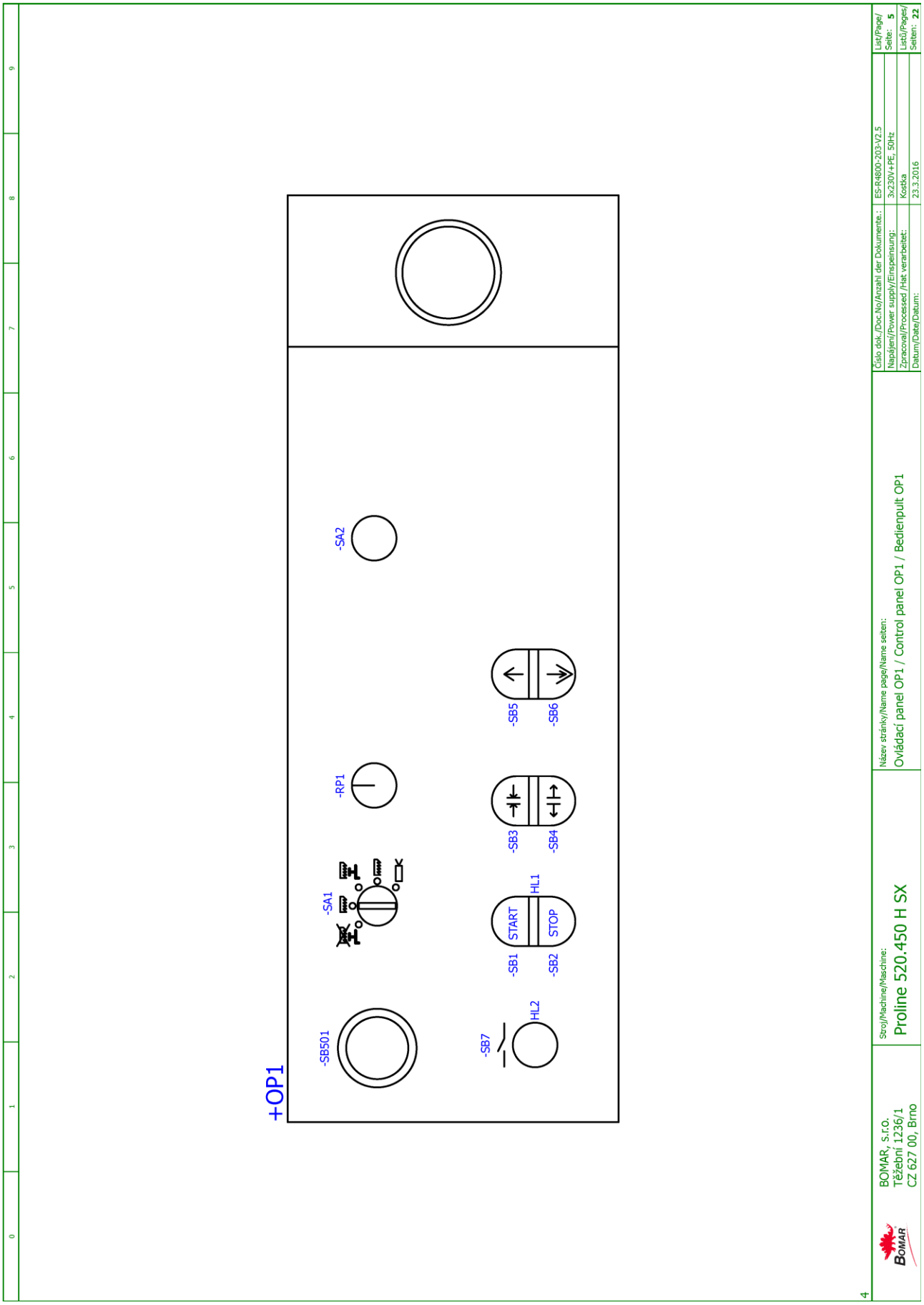
+OP1
-SB501
-SA1
-RP1
-SA2
-SB7
HL2
-SB1
START
-SB2
STOP
HL1
-SB3
-SB4
-SB5
-SB6
BOMAR, s.r.o.
Těžební 1236/1
CZ 627 00, Brno
Stroj/Machine/Maschine:
Proline 520.450 H SX
Název stránky/Name page/Name seiten:
Ovládací panel OP1 / Control panel OP1 / Bedienpult OP1
Číslo dok./Doc.No/Anzahl der Dokumente.:
ES-R4600-203-V2.5
Napájení/Power supply/Einspeisung:
3x230V+PE, 50Hz
Zpracoval/Processed /Hat verarbeitet:
Kostka
Datum/Date/Datum:
23.3.2016
List/Page/
Seite: 5
Listů/Pages/
Seiten: 22
4

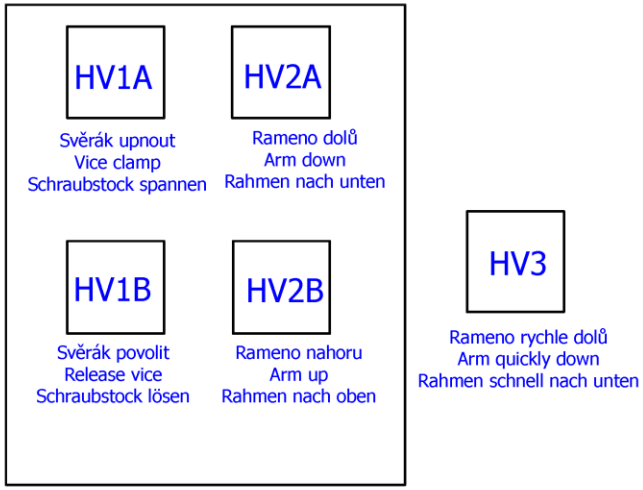

5

BOMAR, s.r.o. Těžební 1236/1 CZ 627 00, Brno	Stroj/Machine/Maschine: Proline 520.450 H SX	Název stránky/Name page/Name seiten: Rozmístění hydraulických ventilů / Placement of Hydraulic valves / Platzierung die Hydroventile	Číslo dok./Doc.No/Anzahl der Dokumente.: ES-R4800-203-V2.5 Napájení/Power supply/Einspeinsung: 3x230V+PE, 50Hz Zpracoval/Processed /Hat verarbeitet: Kostka Datum/Date/Datum: 23.3.2016	List/Page/Seite: 6 Listů/Pages/Seiten: 22

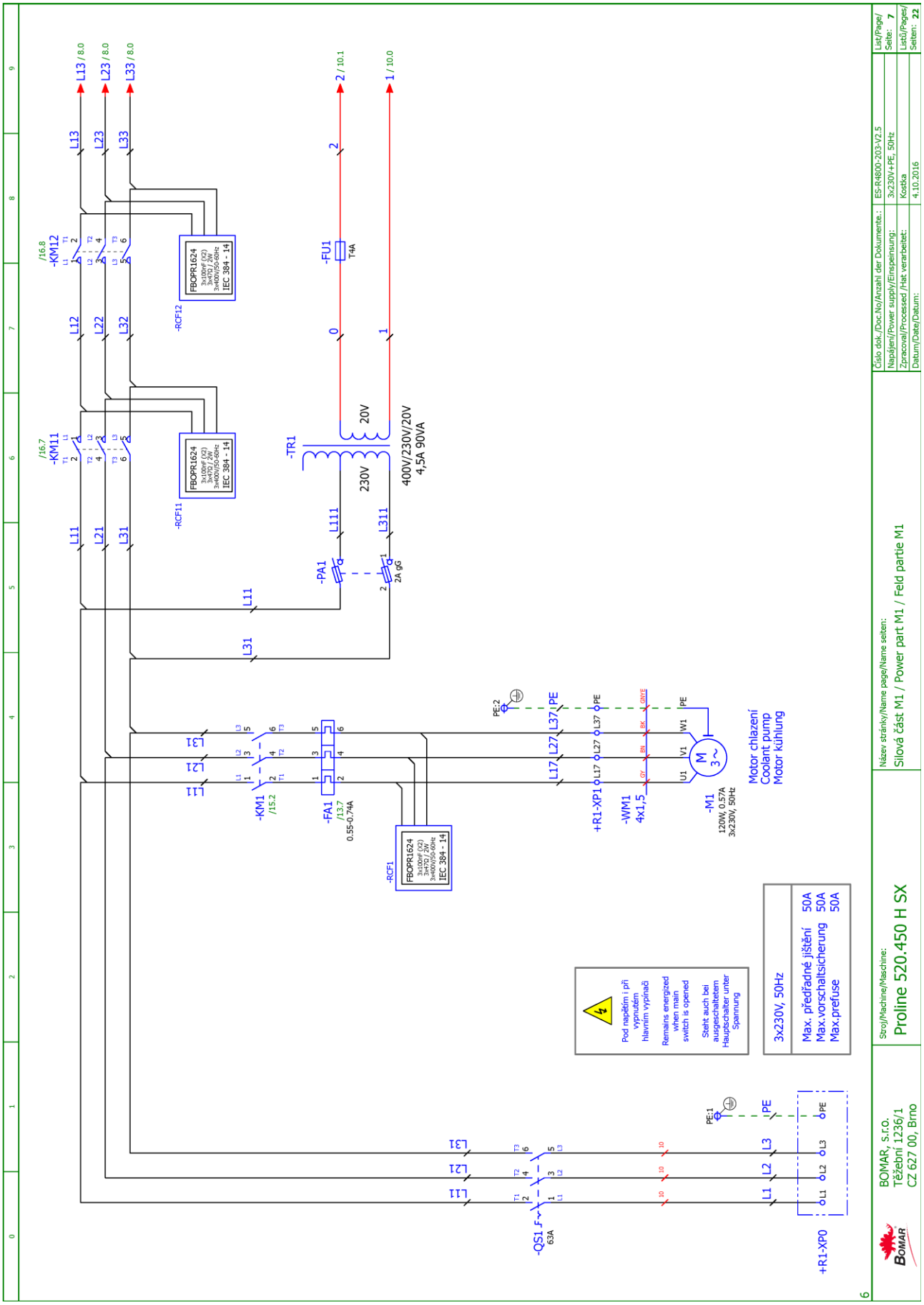
L13 / 8.0
L23 / 8.0
L33 / 8.0
2 / 10.1
1 / 10.0
/16.8
-KM12
/16.7
-KM11
-RCF12
-RCF11
FBOPR1624
3x100nF (X2)
3x470Ω / 2W
3x400V/50-60Hz
IEC 384 - 14
-FU1
T4A
-TR1
20V
230V
400V/230V/20V
4,5A 90VA
-PA1
2A gG
-KM1
/15.2
-FA1
/13.7
0.55-0.74A
-RCF1
PE:2
+R1-XP1
-WM1
4x1,5
-M1
120W, 0.57A
3x230V, 50Hz
Motor chlazení
Coolant pump
Motor kühlung
Pod napětím i při vypnutém hlavním vypínači
Remains energized when main switch is opened
Steht auch bei ausgeschaltetem Hauptschalter unter Spannung
3x230V, 50Hz
Max. předřadné jištění 50A
Max.vorschaltsicherung 50A
Max.prefuse 50A
PE:1
-QS1
63A
+R1-XP0
Číslo dok./Doc.No/Anzahl der Dokumente.: ES-R4800-203-V2.5
Napájení/Power supply/Einspeinsung: 3x230V+PE, 50Hz
Zpracoval/Processed /Hat verarbeitet: Kostka
Datum/Date/Datum: 4.10.2016
List/Page/Seite: 7
Listů/Pages/Seiten: 22
Název stránky/Name page/Name seiten:
Silová část M1 / Power part M1 / Feld partie M1
Stroj/Machine/Maschine:
Proline 520.450 H SX
BOMAR, s.r.o.
Těžební 1236/1
CZ 627 00, Brno
BOMAR

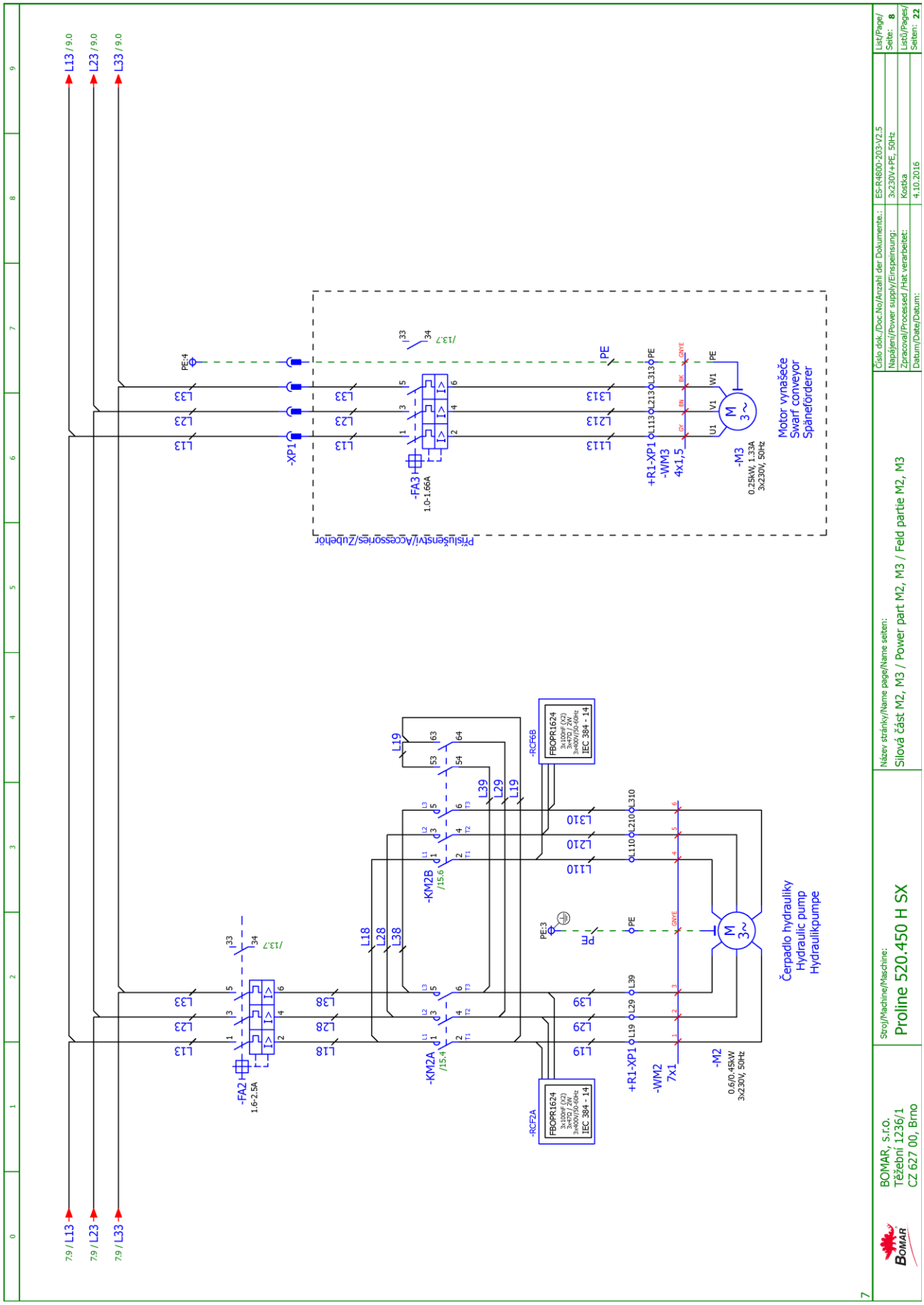

Schémata
Schemas
Schematics

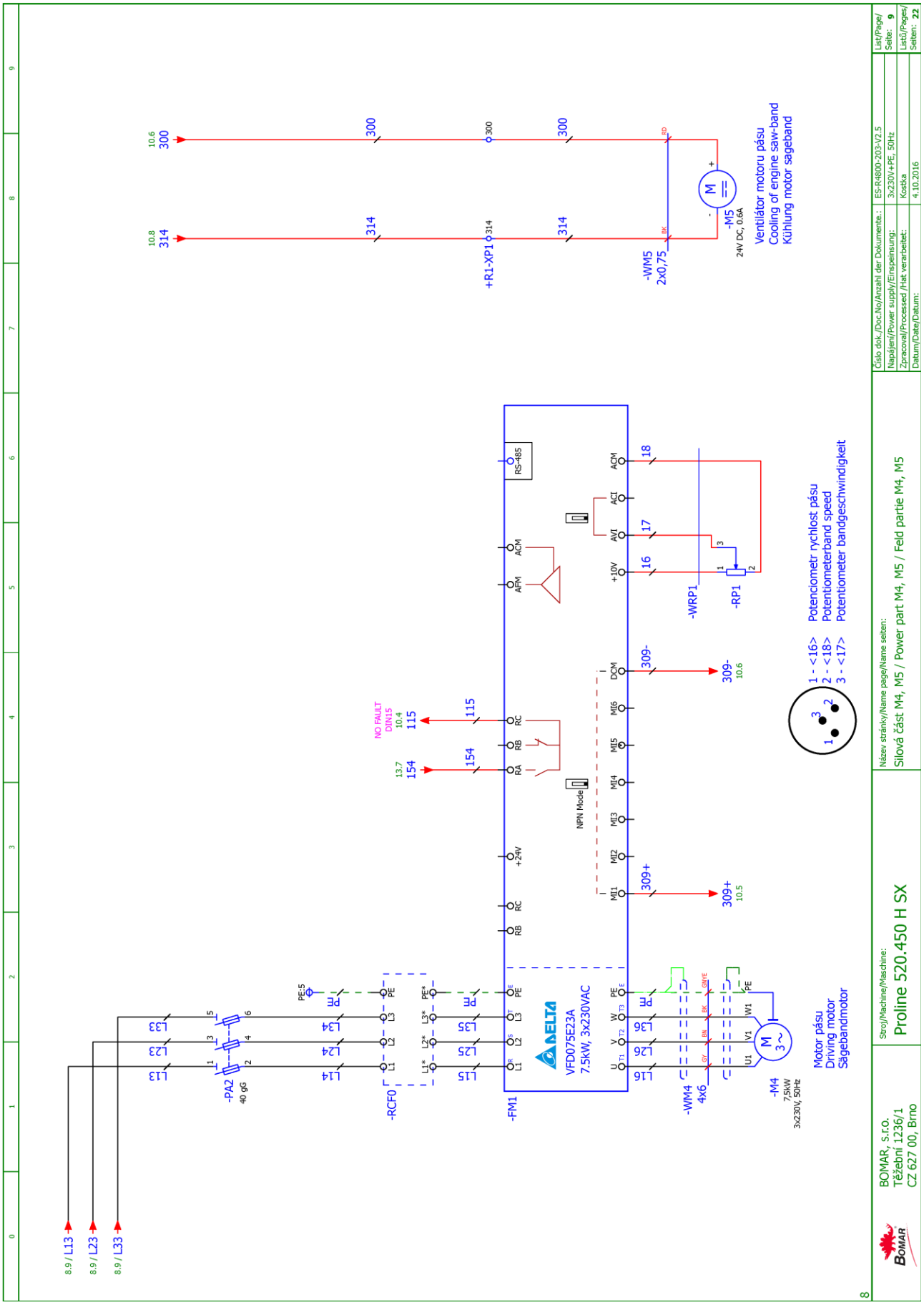
8.9 / L13
8.9 / L23
8.9 / L33
-PA2
40 gG
-RCF0
-FM1
DELTA
VFD075E23A
7.5kW, 3x230VAC
NO FAULT
DIN15
-WM4
4x6
-M4
7,5kW
3x230V, 50Hz
Motor pásu
Driving motor
Sägebandmotor
+R1-XP1
-WM5
2x0,75
-M5
24V DC, 0,6A
Ventilátor motoru pásu
Cooling of engine saw-band
Kühlung motor sageband
-WRP1
-RP1
Potenciometr rychlost pásu
Potentiometerband speed
Potentiometer bandgeschwindigkeit
NPN Mode
RS-485
BOMAR, S.r.o.
Těžební 1236/1
CZ 627 00, Brno
Stroj/Machine/Maschine:
Proline 520.450 H SX
Název stránky/Name page/Name seiten:
Silová část M4, M5 / Power part M4, M5 / Feld partie M4, M5
Číslo dok./Doc.No/Anzahl der Dokumente.:
ES-R4800-203-V2.5
Napájení/Power supply/Einspeisung:
3x230V+PE, 50Hz
Zpracoval/Processed /Hat verarbeitet:
Kostka
Datum/Date/Datum:
4.10.2016
List/Page/
Seite: 9
Listů/Pages/
Seiten: 22

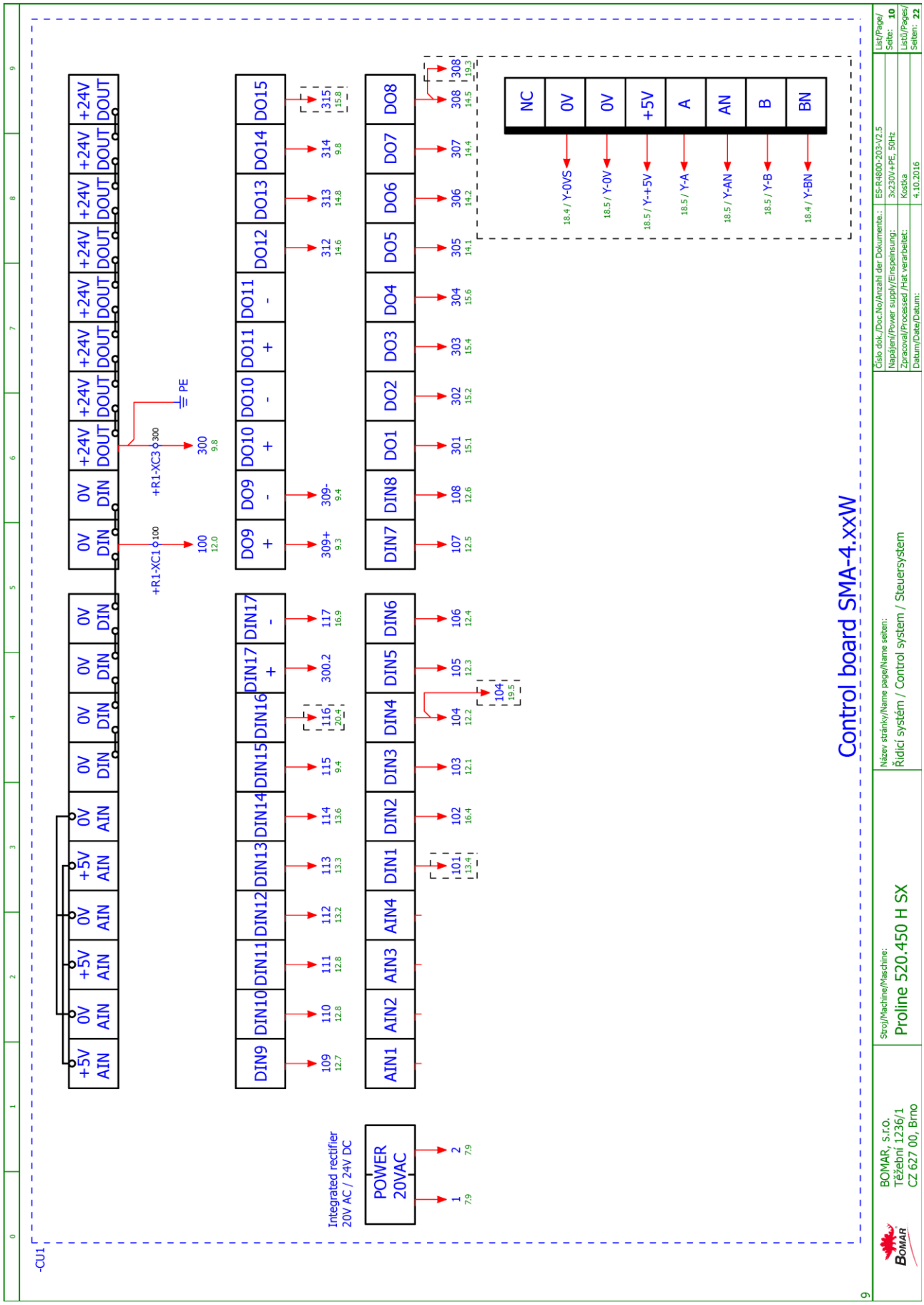
-CU1
Control board SMA-4.xxW
Integrated rectifier
20V AC / 24V DC
POWER
20VAC
AIN1 AIN2 AIN3 AIN4 DIN1 DIN2 DIN3 DIN4 DIN5 DIN6 DIN7 DIN8 DO1 DO2 DO3 DO4 DO5 DO6 DO7 DO8
DIN9 DIN10 DIN11 DIN12 DIN13 DIN14 DIN15 DIN16 DIN17 DO9 DO10 DO11 DO12 DO13 DO14 DO15
+5V AIN 0V AIN +5V AIN 0V AIN +5V AIN 0V AIN 0V DIN 0V DIN 0V DIN 0V DIN 0V DIN 0V DIN +24V DOUT +24V DOUT +24V DOUT +24V DOUT +24V DOUT +24V DOUT +24V DOUT +24V DOUT
+R1-XC1 100
+R1-XC3 300
PE
NC 0V 0V +5V A AN B BN
18.4 / Y-0VS
18.5 / Y-0V
18.5 / Y-+5V
18.5 / Y-A
18.5 / Y-AN
18.5 / Y-B
18.4 / Y-BN
BOMAR, s.r.o.
Těžební 1236/1
CZ 627 00, Brno
Stroj/Machine/Maschine:
Proline 520.450 H SX
Název stránky/Name page/Name seiten:
Řídicí systém / Control system / Steuersystem
Číslo dok./Doc.No/Anzahl der Dokumente.:
ES-R4800-203-V2.5
Napájení/Power supply/Einspeisung:
3x230V+PE, 50Hz
Zpracoval/Processed /Hat verarbeitet:
Kostka
Datum/Date/Datum:
4.10.2016
List/Page/Seite: 10
Listů/Pages/Seiten: 22

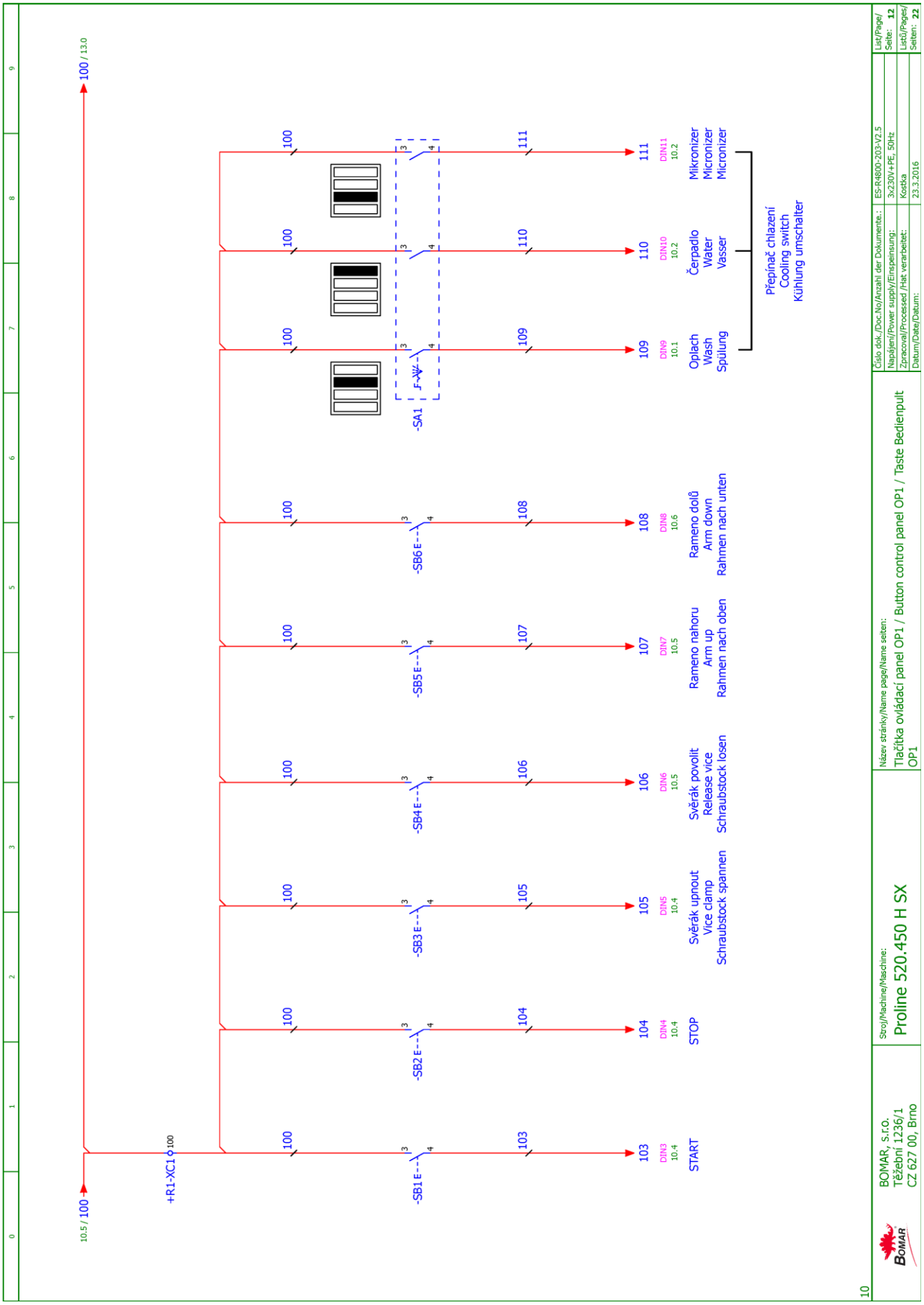
10.5 / 100
100 / 13.0
+R1-XC1
-SB1 E
-SB2 E
-SB3 E
-SB4 E
-SB5 E
-SB6 E
-SA1
103
104
105
106
107
108
109
110
111
DIN3 10.4
DIN4 10.4
DIN5 10.4
DIN6 10.5
DIN7 10.5
DIN8 10.6
DIN9 10.1
DIN10 10.2
DIN11 10.2
START
STOP
Svěrák upnout
Vice clamp
Schraubstock spannen
Svěrák povolit
Release vice
Schraubstock lösen
Rameno nahoru
Arm up
Rahmen nach oben
Rameno dolů
Arm down
Rahmen nach unten
Oplach
Wash
Spülung
Čerpadlo
Water
Vasser
Mikronizer
Micronizer
Micronizer
Přepínač chlazení
Cooling switch
Kühlung umschalter
BOMAR, s.r.o.
Těžební 1236/1
CZ 627 00, Brno
Stroj/Machine/Maschine:
Proline 520.450 H SX
Název stránky/Name page/Name seiten:
Tlačítka ovládací panel OP1 / Button control panel OP1 / Taste Bedienpult OP1
Číslo dok./Doc.No/Anzahl der Dokumente.:
ES-R4800-203-V2.5
Napájení/Power supply/Einspeinsung:
3x230V+PE, 50Hz
Zpracoval/Processed /Hat verarbeitet:
Kostka
Datum/Date/Datum:
23.3.2016
List/Page/Seite: 12
Listů/Pages/Seiten: 22
10

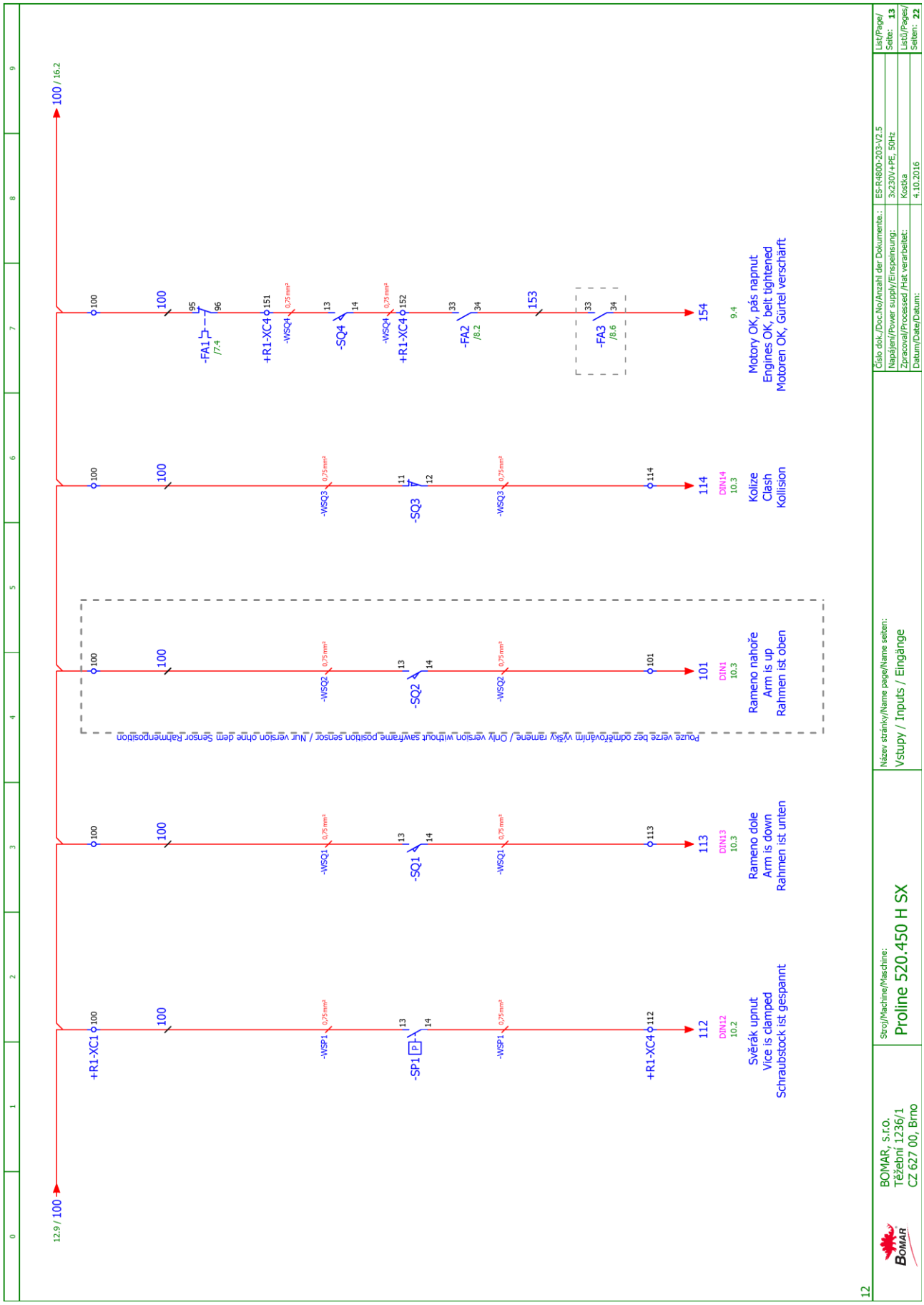
12.9 / 100
100 / 16.2
+R1-XC1
-WSP1
-SP1
+R1-XC4
112
DIN12
10.2
Svěrák upnut
Vice is clamped
Schraubstock ist gespannt
-WSQ1
-SQ1
113
DIN13
10.3
Rameno dole
Arm is down
Rahmen ist unten
Pouze verze bez odměřování výšky ramene / Only version without sawframe position sensor / Nur version ohne dem Sensor Rahmenpositon
-WSQ2
-SQ2
101
DIN1
10.3
Rameno nahoře
Arm is up
Rahmen ist oben
-WSQ3
-SQ3
114
DIN14
10.3
Kolize
Clash
Kollision
-FA1
/7.4
-WSQ4
-SQ4
-FA2
/8.2
-FA3
/8.6
154
9.4
Motory OK, pás napnut
Engines OK, belt tightened
Motoren OK, Gürtel verschärft
12
BOMAR, s.r.o.
Těžební 1236/1
CZ 627 00, Brno
Stroj/Machine/Maschine:
Proline 520.450 H SX
Název stránky/Name page/Name seiten:
Vstupy / Inputs / Eingänge
Číslo dok./Doc.No/Anzahl der Dokumente.:
ES-R4800-203-V2.5
List/Page/Seite: 13
Napájení/Power supply/Einspeisung:
3x230V+PE, 50Hz
Listů/Pages/Seiten: 22
Zpracoval/Processed /Hat verarbeitet:
Kostka
Datum/Date/Datum:
4.10.2016

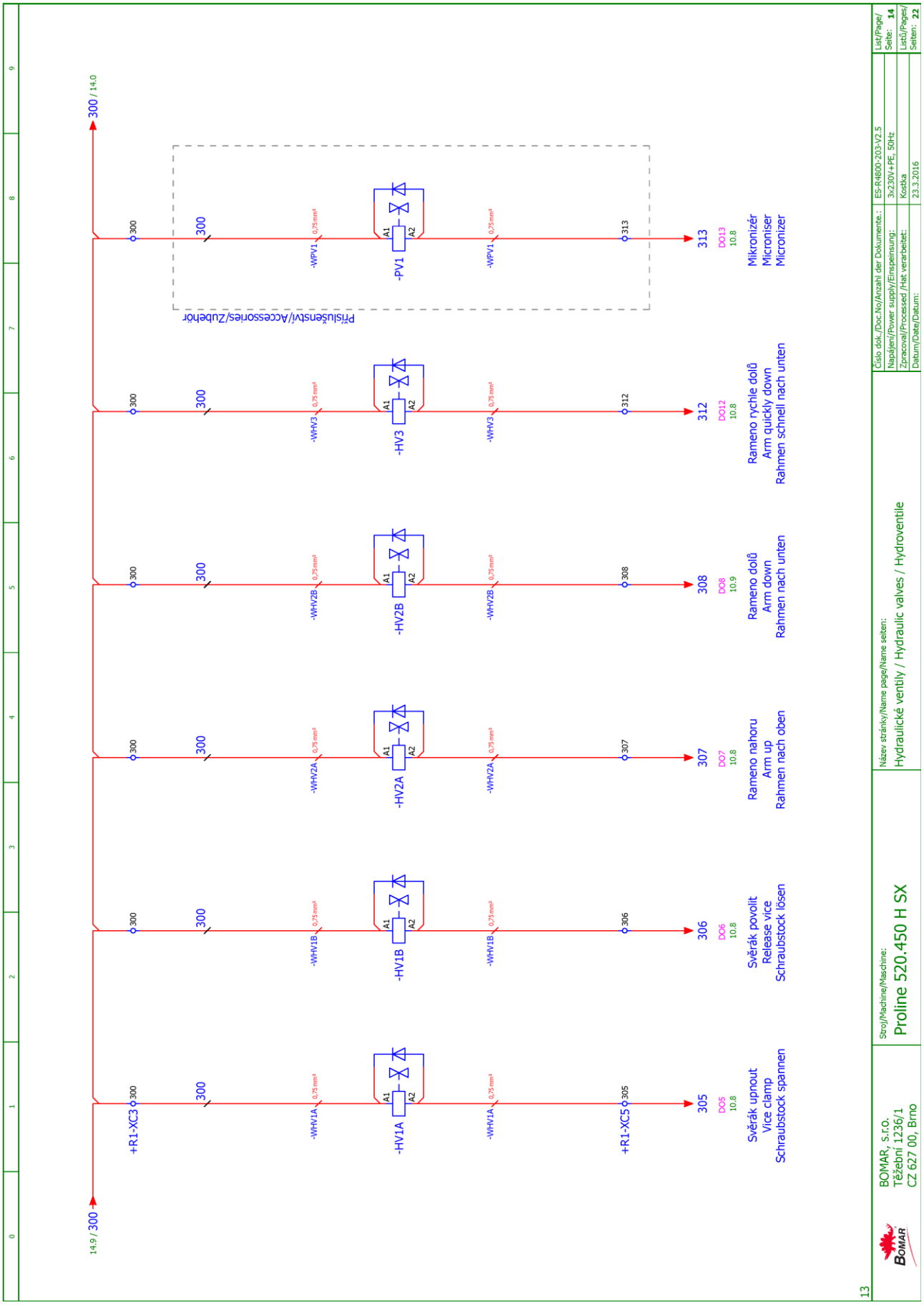
14.9 / 300
300 / 14.0
+R1-XC3
300
-WHV1A
0,75mm²
-HV1A
A1
A2
-WHV1A
0,75mm²
+R1-XC5
305
305
DO5
10.8
Svěrák upnout
Vice clamp
Schraubstock spannen
-WHV1B
0,75mm²
-HV1B
A1
A2
-WHV1B
0,75mm²
306
306
DO6
10.8
Svěrák povolit
Release vice
Schraubstock lösen
-WHV2A
0,75mm²
-HV2A
A1
A2
-WHV2A
0,75mm²
307
307
DO7
10.8
Rameno nahoru
Arm up
Rahmen nach oben
-WHV2B
0,75mm²
-HV2B
A1
A2
-WHV2B
0,75mm²
308
308
DO8
10.9
Rameno dolů
Arm down
Rahmen nach unten
-WHV3
0,75mm²
-HV3
A1
A2
-WHV3
0,75mm²
312
312
DO12
10.8
Rameno rychle dolů
Arm quickly down
Rahmen schnell nach unten
-WPV1
0,75mm²
-PV1
A1
A2
-WPV1
0,75mm²
313
313
DO13
10.8
Mikronizér
Microniser
Micronizer
Příslušenství/Accessories/Zubehör
BOMAR, s.r.o.
Těžební 1236/1
CZ 627 00, Brno
Stroj/Machine/Maschine:
Proline 520.450 H SX
Název stránky/Name page/Name seiten:
Hydraulické ventily / Hydraulic valves / Hydroventile
Číslo dok./Doc.No/Anzahl der Dokumente.:
ES-R4800-203-V2.5
Napájení/Power supply/Einspeinsung:
3x230V+PE, 50Hz
Zpracoval/Processed /Hat verarbeitet:
Kostka
Datum/Date/Datum:
23.3.2016
List/Page/
Seite: 14
Listů/Pages/
Seiten: 22
13

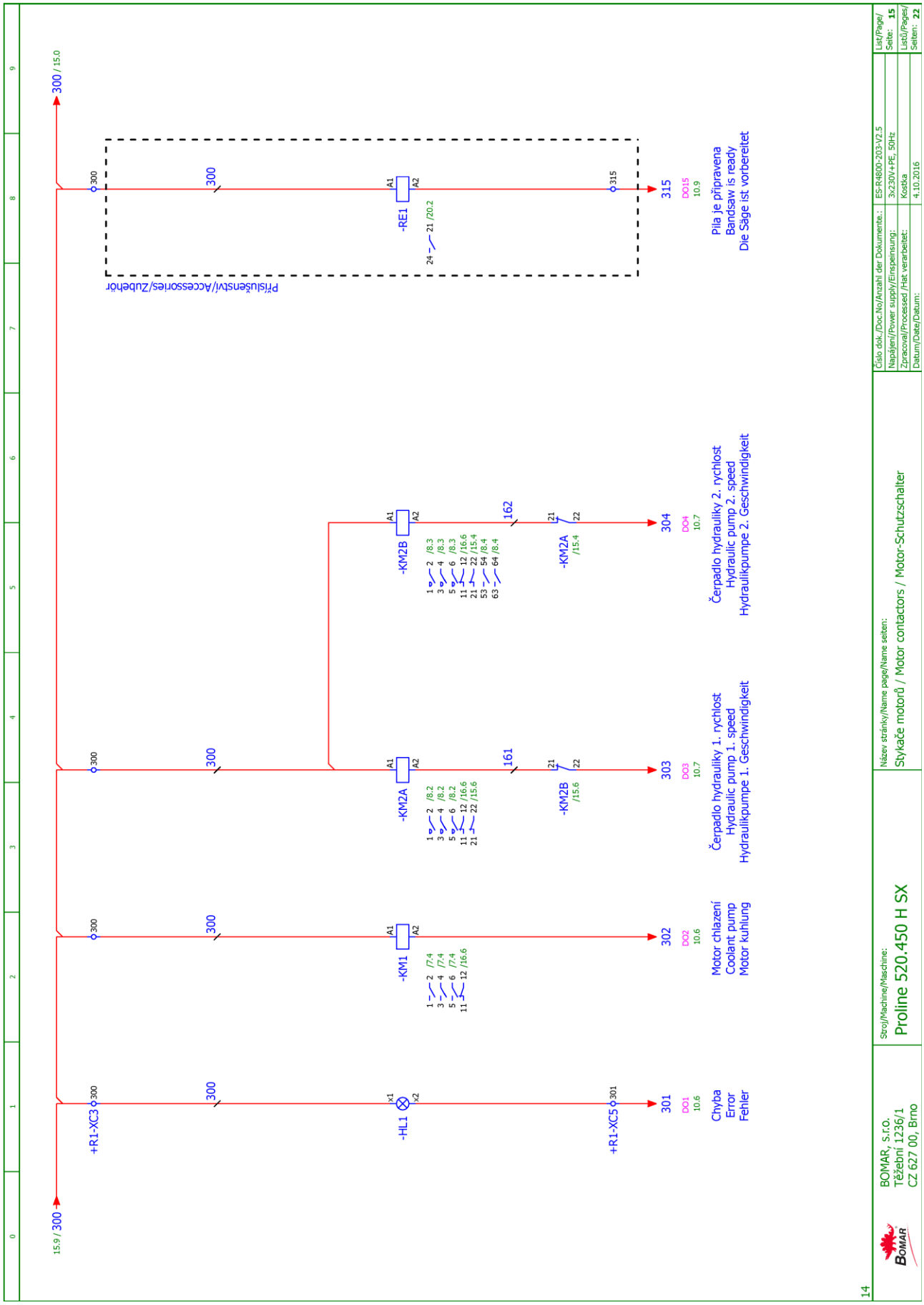
15.9 / 300
300 / 15.0
+R1-XC3
-HL1
+R1-XC5
-KM1
-KM2A
-KM2B
-RE1
Příslušenství/Accessories/Zubehör
Chyba
Error
Fehler
Motor chlazení
Coolant pump
Motor kühlung
Čerpadlo hydrauliky 1. rychlost
Hydraulic pump 1. speed
Hydraulikpumpe 1. Geschwindigkeit
Čerpadlo hydrauliky 2. rychlost
Hydraulic pump 2. speed
Hydraulikpumpe 2. Geschwindigkeit
Pila je připravena
Bandsaw is ready
Die Säge ist vorbereitet
BOMAR, s.r.o.
Těžební 1236/1
CZ 627 00, Brno
Stroj/Machine/Maschine:
Proline 520.450 H SX
Název stránky/Name page/Name seiten:
Stykače motorů / Motor contactors / Motor-Schutzschalter
Číslo dok./Doc.No/Anzahl der Dokumente.:
ES-R4800-203-V2.5
Napájení/Power supply/Einspeisung:
3x230V+PE, 50Hz
Zpracoval/Processed /Hat verarbeitet:
Kostka
Datum/Date/Datum:
4.10.2016
List/Page/Seite: 15
Listů/Pages/Seiten: 22
14

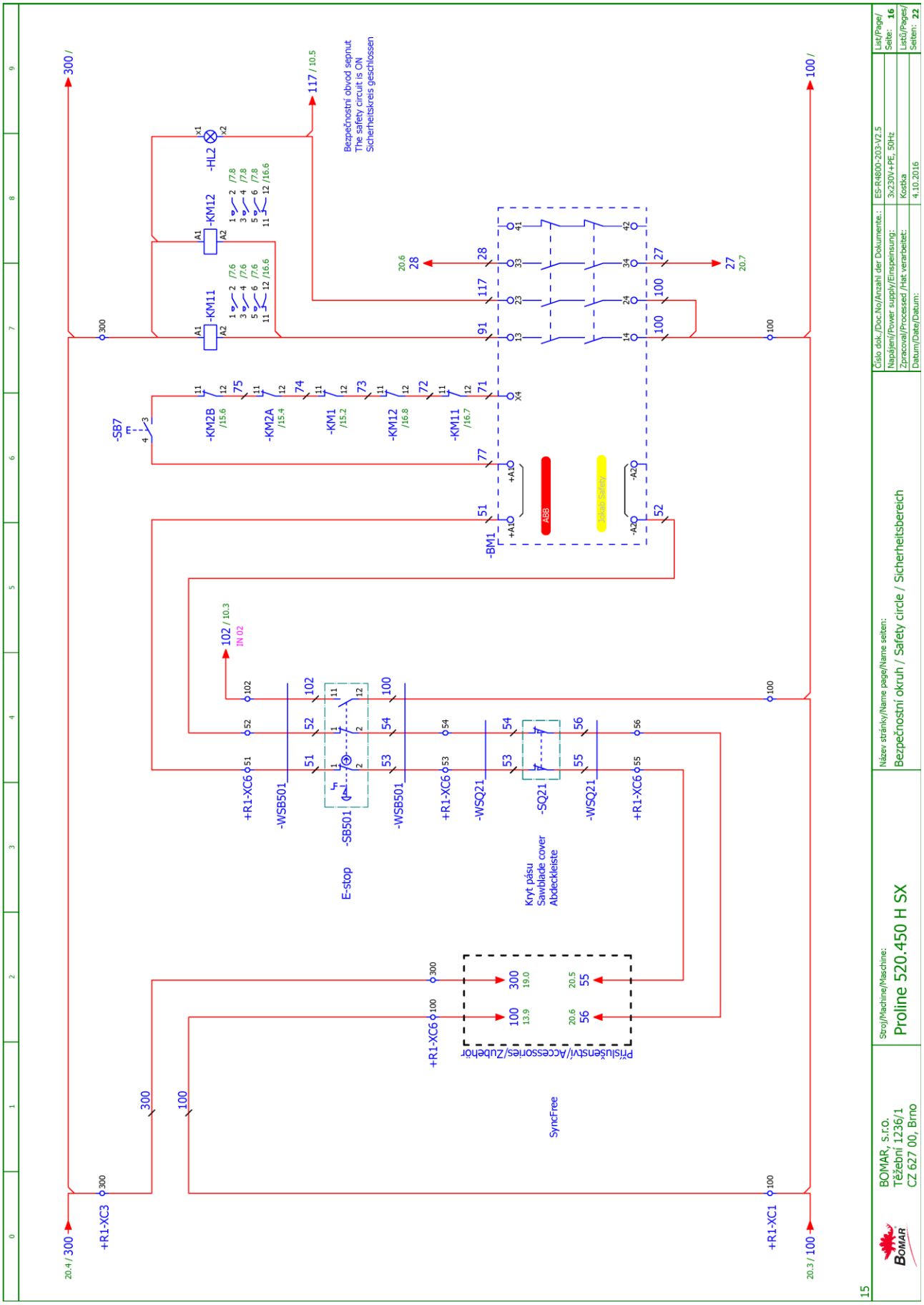
Bezpečnostní obvod sepnut
The safety circuit is ON
Sicherheitskreis geschlossen
-HL2
-KM12
-KM11
-SB7
-KM2B /15.6
-KM2A /15.4
-KM1 /15.2
-KM12 /16.8
-KM11 /16.7
-BM1
ABB
Safety Safety
E-stop
-SB501
-WSB501
+R1-XC6
-WSQ21
-SQ21
Kryt pásu
Sawblade cover
Abdeckleiste
Příslušenství/Accessories/Zubehör
SyncFree
+R1-XC3
+R1-XC1
Název stránky/Name page/Name seiten:
Bezpečnostní okruh / Safety circle / Sicherheitsbereich
Stroj/Machine/Maschine:
Proline 520.450 H SX
BOMAR, s.r.o.
Těžební 1236/1
CZ 627 00, Brno
Číslo dok./Doc.No/Anzahl der Dokumente.:
ES-R4800-203-V2.5
Napájení/Power supply/Einspeisung:
3x230V+PE, 50Hz
Zpracoval/Processed /Hat verarbeitet:
Kostka
Datum/Date/Datum:
4.10.2016
List/Page/Seite: 16
Listů/Pages/Seiten: 22

Pouze verze s odměřováním výšky ramene/Only version with sawframe position sensor/Nur version mit dem Sensor Rahmenposition

SN1

Snímač výšky ramene Sawframe position sensor Rahmenposition Sensor		Kabel HELU-Flexi 7x0.14
+	HNĚDÁ BROWN BRAUN	HNĚDÁ+MODRÁ BROWN+BLUE BRAU+BLAU
-	SEDA GREY GRAU	SEDA GREY GRAU
A	RUZOVA PINK ROSAROT	ŽLUTÁ YELLOW GELB
AN	ZELENÁ GREEN GRÜN	RŮŽOVÁ PINK ROSA
B	ŽLUTÁ YELLOW GELB	BÍLÁ WHITE WEIS
BN	BÍLÁ WHITE WEIS	ZELENÁ GREEN GRÜN
	ČERNÁ BLACK SCHWARZ	STÍNĚNÍ SHIELD LEITUNGSSCHIRM

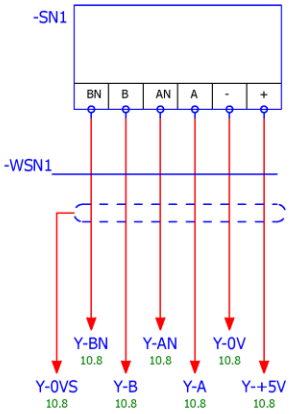

16

BOMAR, s.r.o. Těžební 1236/1 CZ 627 00, Brno	Stroj/Machine/Maschine: Proline 520.450 H SX	Název stránky/Name page/Name seiten: Snímač výšky ramene / Sawframe position sensor / Rahmenposition sensor	Číslo dok./Doc.No/Anzahl der Dokumente.: ES-R4800-203-V2.5 Napájení/Power supply/Einspeinsung: 3x230V+PE, 50Hz Zpracoval/Processed /Hat verarbeitet: Kostka Datum/Date/Datum: 23.3.2016	List/Page/Seite: 18 Listů/Pages/Seiten: 22

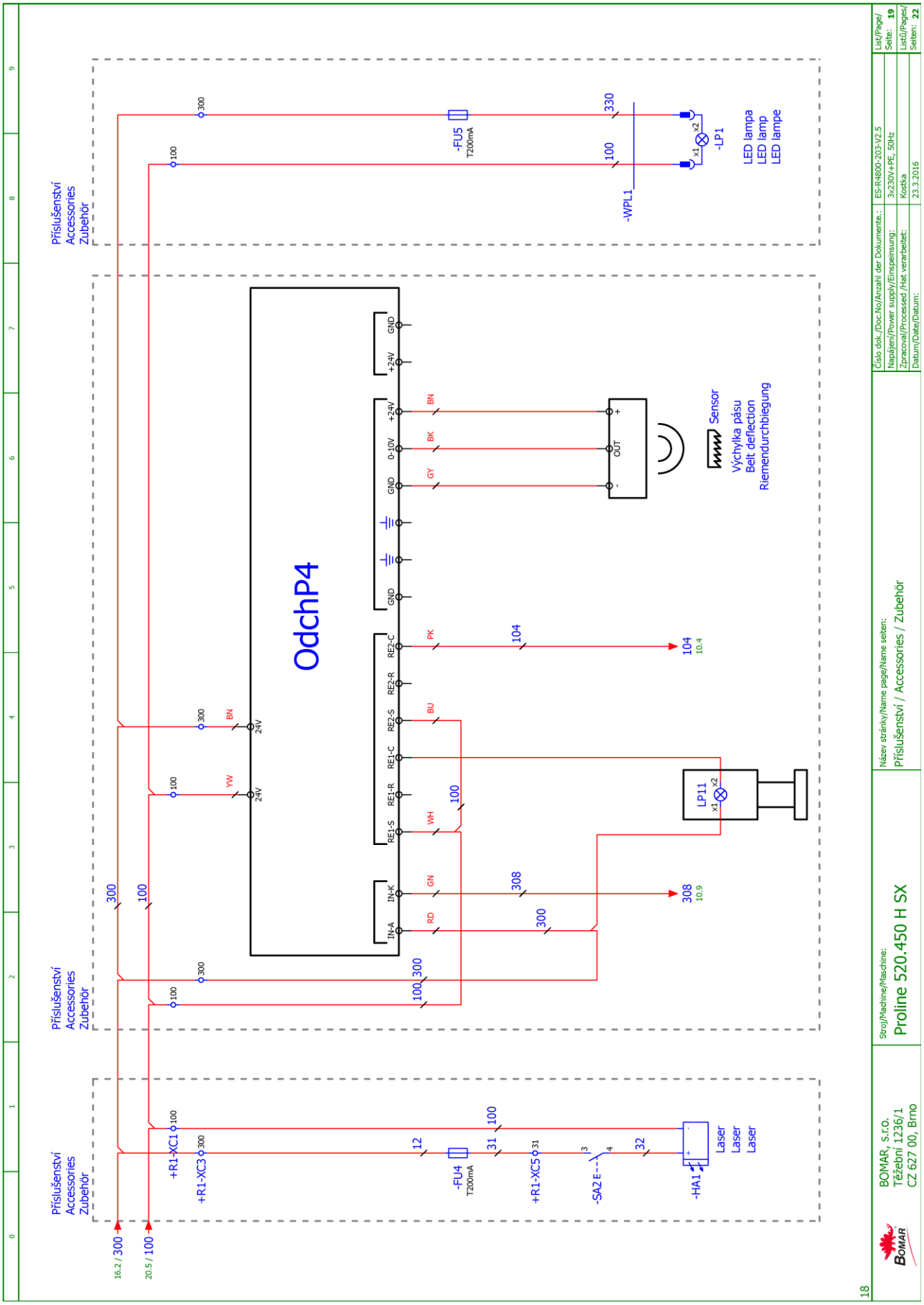
Příslušenství
Accessories
Zubehör
OdchP4
IN-A
IN-K
RE1-S
RE1-R
RE1-C
RE2-S
RE2-R
RE2-C
GND
0-10V
+24V
+24V
GND
Sensor
Výchylka pásu
Belt deflection
Riemendurchbiegung
OUT
LP11
-FU5
T200mA
-LP1
LED lampa
LED lamp
LED lampe
-WPL1
+R1-XC1
+R1-XC3
-FU4
T200mA
+R1-XC5
-SA2
-HA1
Laser
Laser
Laser
16.2 / 300
20.5 / 100
Číslo dok./Doc.No/Anzahl der Dokumente.:
ES-R4800-203-V2.5
List/Page/Seite: 19
Napájení/Power supply/Einspeisung:
3x230V+PE, 50Hz
Listů/Pages/Seiten: 22
Zpracoval/Processed /Hat verarbeitet:
Kostka
Datum/Date/Datum:
23.3.2016
Název stránky/Name page/Name seiten:
Příslušenství / Accessories / Zubehör
Stroj/Machine/Maschine:
Proline 520.450 H SX
BOMAR, s.r.o.
Těžební 1236/1
CZ 627 00, Brno
18

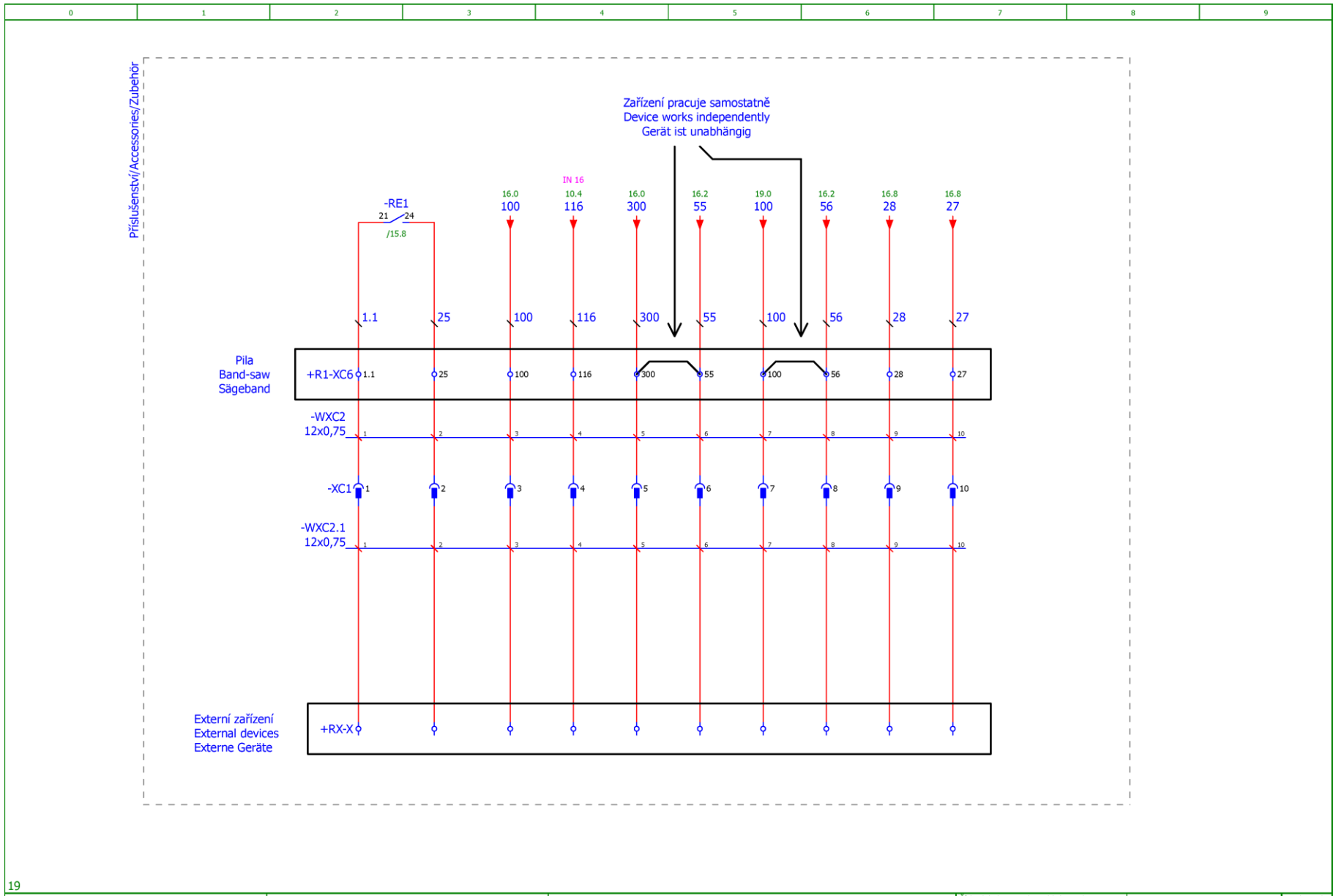

19

BOMAR, s.r.o. Těžební 1236/1 CZ 627 00, Brno	Stroj/Machine/Maschine: Proline 520.450 H SX	Název stránky/Name page/Name seiten: SyncFree / SyncFree / SyncFree	Číslo dok./Doc.No/Anzahl der Dokumente.: ES-R4800-203-V2.5 Napájení/Power supply/Einspeinsung: 3x230V+PE, 50Hz Zpracoval/Processed /Hat verarbeitet: Kostka Datum/Date/Datum: 13.7.2016	List/Page/Seite: 20 Listů/Pages/Seiten: 22

6.3. Hydraulické schéma / Hydraulikschema / Hydraulic scheme

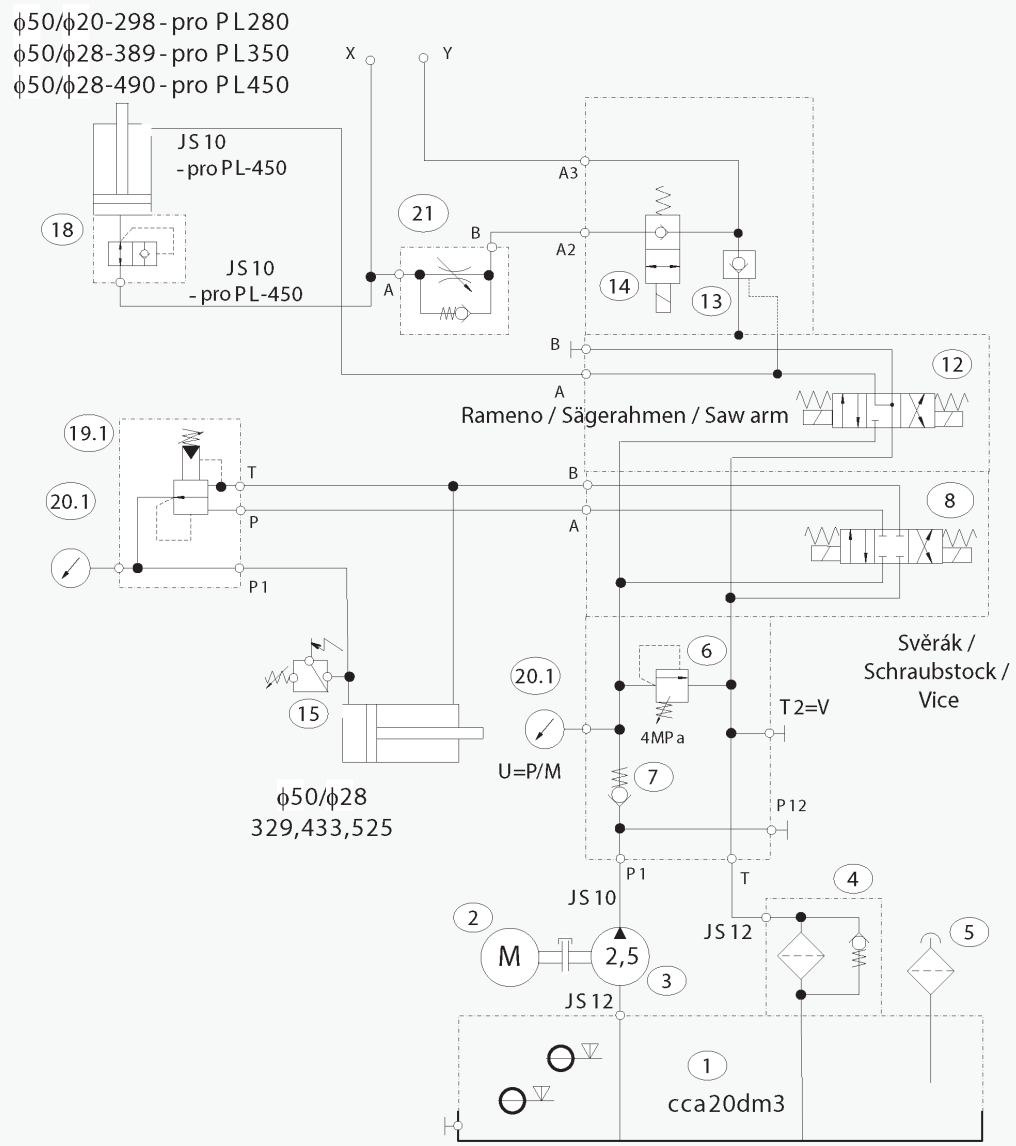

205.R216-00
Proline 280/350/450 H
24.5.2016

Typ / Type / Type	Proline 280/350/450 H
Hydraulický agregát / Hydroaggregat / Hydro aggregat	92.001.077 (FMW), S001-137-2, PPM-AC0, 48/0, 6kW/300/1500-PG1/2,5-TM20-CB03-FR
Neuvedené světlosti / Unerwähnt Lichtbreite / Unlisted inside diameters	JS6
Výstupní šroubení / Ausgangschraubung / Output screewing	G1/4"

Pmax	4,5 MPa
Q	3,3 / 6,6 dm³/min
n	1500 / 3000 ot./min
P	0,48 / 0,6 kW

Regulační závlek stroje: /
Regelungskreis der Anlage für Andruck in den Schnitt: /
Control circuit for the machine: PL450

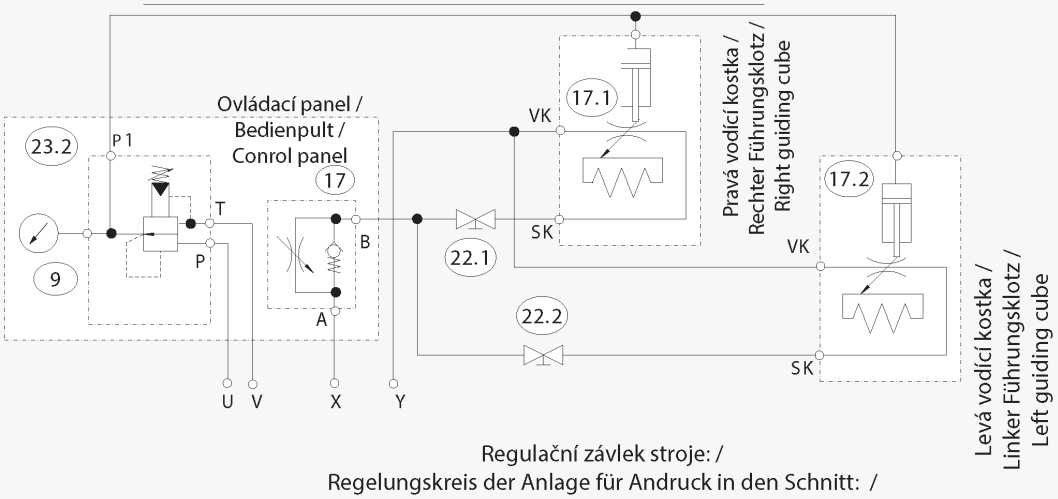

Regulační závlek stroje: /
Regelungskreis der Anlage für Andruck in den Schnitt: /
Control circuit for the machine:
PL-280; PL-350

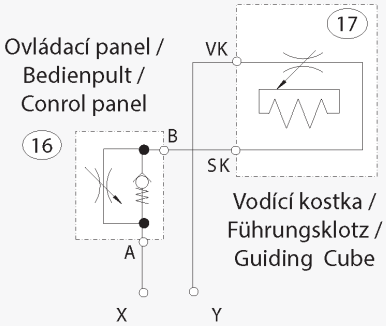

Regulace upínací síly (prvky č. 19+20) jen na přání zákazníka/
Regelung der Spannkraft (Elemente Nr. 19+20) nur auf Wunsch des Kunden/
Clamping force control (elements No. 16+17+18) by customer's request only

V případě el. sítě 3x230V zaměnit elmotor za 92.001.139/
Bei dem Stromnetz 3x230V Elektromotor durch 92.001.139 ersetzen/
In the case of the electric mains 3x230V, replace the electric motor with 92.001.139

U stroje velikosti 460 jsou 2 vodící regul. kostky (poz. 14) paralelně propojené
a mají hydraulický přítlak do řezu, redukčák (19.2+20.2) klasicky v ovlád.pultu a napojen např. pomocí vývodu X, /
Bei der Anlage Gr. 460 sind 2 Führungswürfel (Pos. 14) parallel verbunden und haben hydraulischen
Andruck in den Schnitt, Reduzierventil (19.2+20.2) traditionell in Bedienungstafel und z.B.
mittels Ausgangs X, Y angeschlossenY/
For the machine size 460, there are 2 guide control cubes (pos. 14) connected parallely,
which have hydraulic thrust to cut, reducer (19.2+20.2) at the control panel as usual, connected,
for example, by means of the outlet X, Y

205.R216-00
Proline 280/350/450 H
24.5.2016

Typ / Type / Type	Proline 280/350/450 H
Hydraulický agregát / Hydroaggregat / Hydro aggregat	92.001.077 (FMW), S001-137-2, PPM-AC0, 48/0, 6kW/300/1500-PG1/2,5-TM20-CB03-FR
Neuvedené světlosti / Unerwähnt Lichtbreite / Unlisted inside diameters	JS6
Výstupní šroubení / Ausgangschraubung / Output screewing	G1/4"

Pmax	4,5 MPa
Q	3,3 / 6,6 dm³/min
n	1500 / 3000 ot./min
P	0,48 / 0,6 kW

Poz.	Název položky		ks	Číslo skladové položky
Pos.	**Bezeichnung**		**Menge**	**Artikelnummer im Lagerhaus**
Pos.	**Item**		**Pcs.**	**Stock Item Number**
1	Nádrž / Behälter / Tank	TM 13,5/S, SPEC. (cca20dm3)	1	
2	Elektromotor / Elektromotor / Electromotor	0,48/0,6 kW 400/230 V, 50 Hz	1	
3	Hydrogenerátor / Hydraulikgenerator / Hydrogenerator	10A2, 5X053G, 2,5 cm3/ot.	1	92.153.132
4	Zpětný filtr / Rückschlagfilter / Charge-back filter	MPF0301AG1	1	92.153.131
5	Nalévací zátka / Stopfen / Fill stopper	CPT-MD-FA/1"	1	92.019.007
6	Přepouštěcí ventil / Bypaßventil / By pass valve	MO-020/32	1	92.159.001
7	Jednosměrný ventil / Einwegventil / One-way valve	CV08-20-0-N-4 V205-007-1-01	1	92.160.001
8	Rozváděč / Schaltschrank / Switchboard	DVE03-S01-B4-C24-20-T1-M1	1	92.101.041
9	Manometr / Manometer / Manometer	Ø68 s/mit/with Glycerin	1	
10	--	--	--	
11	-	-	-	
12	Rozváděč / Schaltschrank / Switchboard	DVE03-S04-Bx-C24/20/T1-M1	1	92.101.034
13	Hydraulický zámek / Hydraulisches Schloß / Hydraulic lock	PC08-30-0-N	1	92.103.007
14	Sedlový ventil / Sattelventil/ Saddle valve	SV08-20-0-N-24EG	1	92.101.035
15	Tlakový spínač / Druckschalter / Pressure switch	Kod/Kode/Code 0166415031059 20-50bar	1	92.201.003
16	Škrtící ventil / Drosselventil / Throttle-valve	VS01-04-R2, 5-0S	2	92.152.001
17	Kostka regulace / Regulationklotz / Regulation cube	Manuální přítlak/Manuellen Druck/Manual pressure - (Proline 320.280 a/und/ and Proline 420.350)	1	251.078
		Hydraulický přítlak/Hydraulikdruck/Hydraulic pressure (Proline 520.450)	2	251.346
18	Ventil pojistný / Sicherungsventil / Retaining valve	VPNH ¼"	1	92.151.001
19	Redukčný ventil / Reduktionsventil / Control valve	VRN1-06/RV-6,3,	2/1/0	92.154.001
20	Manometr / Manometer / Manometer	Ø68 , 0-60 bar	2/1/0	
21	Zpětný ventil / Rückschlagfilter / Charge-back filter	VJS3-06-005-G1-150	2/0	

22	Kulový ventil /Kugelventil / Globe valve		4/0	
23	Redukčný ventil / Reduktionsventil / Control valve	VRN2-06/S-6R	1/0	92.154.001

7. Výkresy sestav pro objednání náhradních dílů / Zeichnungen für Bestellung der Ersatzteile / Drawing assemblies for spare parts order – Proline 520.450 H

- Při objednávání náhradních dílů vždy uvádějte: typ stroje (např. Proline 520.450 H/Hsx), výrobní číslo (např. 125) a rok výroby (např. 1999).

- In die Bestellung der Ersatzteile führen Sie immer an: Maschinentyp (z. B. Proline 520.450 H/Hsx), Serien Nr. (z. B. 125) und Baujahr (z. B. 1999).

- For spare parts order, you must always to allege: type of machine (for example Proline 520.450 H/Hsx), serial number (for example 125, see cover page) and year of construction (for example 1999).

7.1. PROLINE 520.450 H

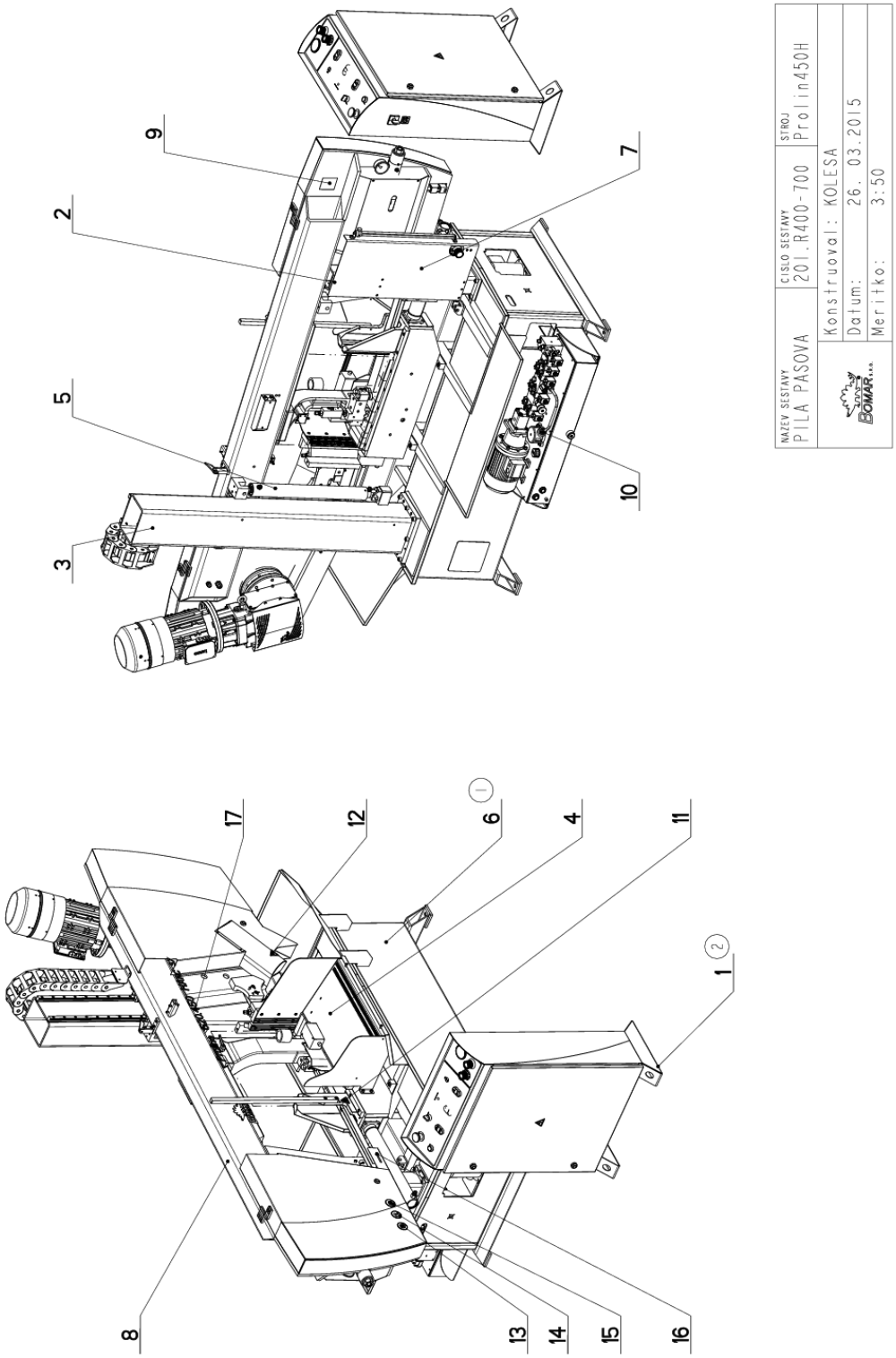

Cislo Sestavy	Ver.	Nazev sestavy
201.R400-700	2	PILA PASOVA/BAND SAW/BANDSÄGE

Poz.	Objednaci cislo	Ver.	Nazev polozky	Rozmer	Ks
1	201.R230-600 (2)	0	OVLADACI PANEL / CONTROL PANEL / BEDIENPULT		1
2	201.R402-020	1	SLOUP / POLE / SÄULE		1
3	201.R402-050	1	SLOUP / POLE / SÄULE		1
4	201.R403-000	4	SVERAK / VICE / SCHRAUBSTOCK		1
5	201.Y407-010	4	VALEC ZVEDACI / LIFTING CYLINDER / HEBEZYLINDER		2
6	221.R401-750 (1)	1	PODSTAVEC / BASE / UNTERSATZ		1
7	221.R402-730	2	ODMEROVANI / POLE / SÄULE		1
8	221.R404-700	4	RAMENO / SAW ARM / SAGERAHMEN		1
9	30.R499-701	2	STITEK TYPOVY / MACHINE LABEL / MASCHINE SCHILD	P 0.5x65	1
10	92.001.077	0	AGREGAT HYDRAULICKY / HYDRAULIC GENERATOR / HYDRAULIKAGGREGAT		1
11	99.900.039	0	SAMOLEPKA / STICKER / AUFKLEBER	NEBEZP.STLACENI	1
12	99.900.040	0	SAMOLEPKA / STICKER / AUFKLEBER		1
13	99.900.047	0	SAMOLEPKA / STICKER / AUFKLEBER		1
14	99.900.048	0	SAMOLEPKA / STICKER / AUFKLEBER		1
15	99.900.049	0	SAMOLEPKA / STICKER / AUFKLEBER		1
16	99.900.053	0	SAMOLEPKA / STICKER / AUFKLEBER		1
17	99.901.048	1	SAMOLEPKA / STICKER / AUFKLEBER		1

1.ZRUS.PODSTAVEC 221.R401-700 A NAHR.221.R401-750. 278/ZM341 12.12.2012 SLEZACKOVA

2.ZRUSEN OVLADACI PANEL 201.M230-700 A NAHR.201.M230-600. 104/ZM073 20.4.2015 SLEZACKOVA

Cislo Sestavy/Number of assembly/Nummer der Baugruppe; Verze (Ver.)/Version/Version; Nazev sestavy/Assembly title/Name der Baugruppe; Pozice (Poz.)/Position/Position; Objednaci cislo/Purchase order number/Bestellnummer; Nazev polozky/Volume title/Name der Position; Rozmer/Stock size/Abmessung

7.3. Ovladací panel / Control panel / Bedienpult

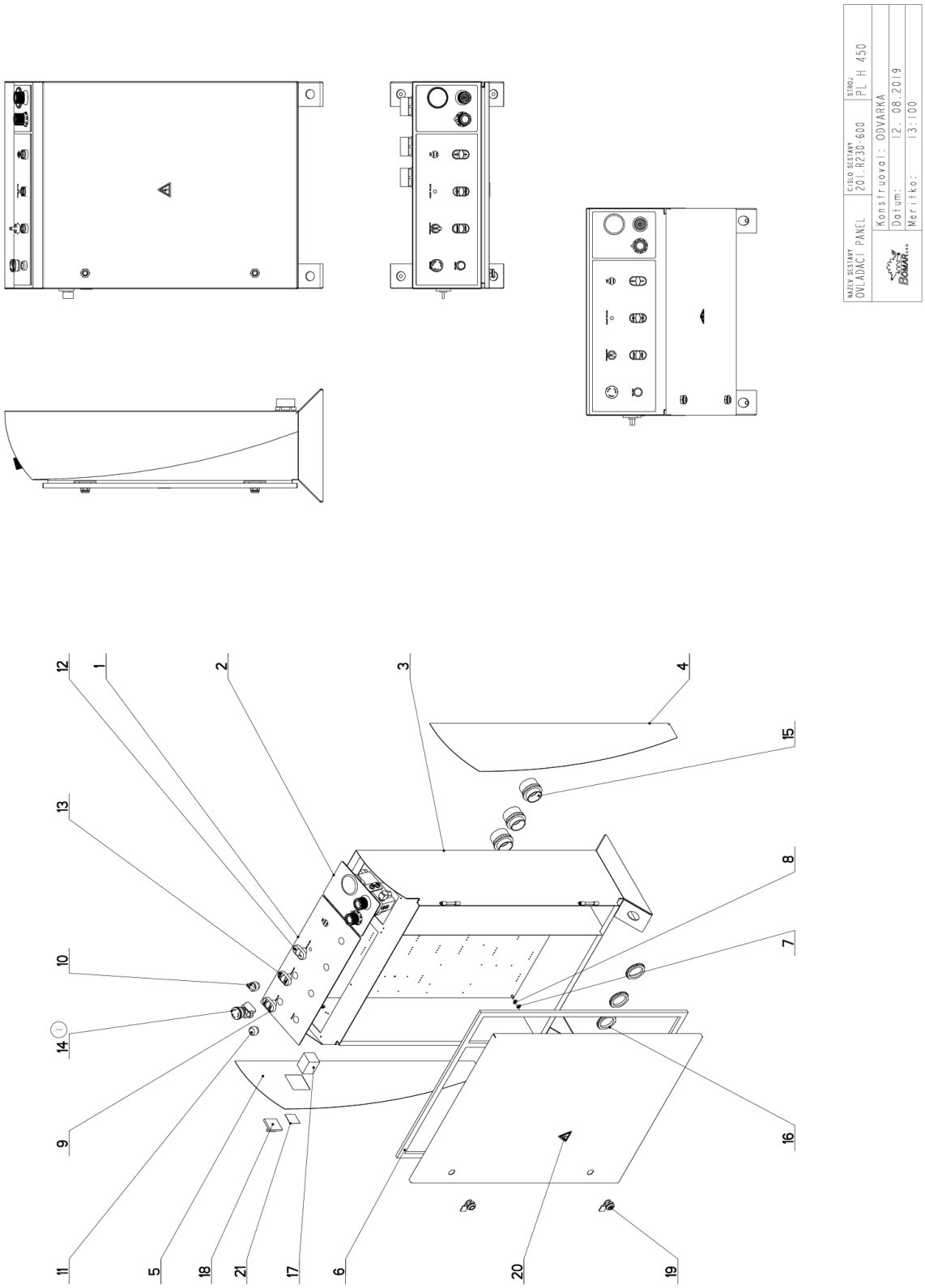

7.4. Kusovník / Piece list / Stückliste - Ovladací panel / Control panel / Bedienpult

Cisla Sestavy	Ver.	Nazev sestavy
201.R230-600	1	OVLADACI PANEL/CONTROL PANEL/BEDIENPULT

Poz.	Objednaci cislo	Ver.	Nazev polozky	Rozmer	Ks
1	251.863	0	PANEL ELEKTRO / ELECTRO PANEL / PANEL		1
2	201.R230-220	1	OVLADACI PANEL / CONTROL PANEL / BEDIENPULT		1
3	30.R230-201	4	SKRIN / BOX / KASTEN		1
4	30.R230-204	1	PLECH / PLATE / BLECH	P 1x220	1
5	30.R230-206	2	PLECH / PLATE / BLECH	P 1x220	1
6	61.352.001	0	TESNENI / SEALING / DICHTUNG	TESNENI 19x10	1
7	90.100.55.004	0	MATICE / NUT / MUTTER	MATICE , M6	4
8	90.130.50.004	0	PODLOZKA / WASHER / UNTERLEGSCHEIBE	PODLOZKA 6,4	4
9	91.060.034	0	HLAVICE / HEAD / KOPF	START/STOP	1
10	91.060.051	0	PREPINAC / SWITCH / UMSCHALTER		1
11	91.060.053	0	HLAVICE / HEAD / KOPF		1
12	91.060.054	0	HLAVICE / HEAD / KOPF	NAHORU/DOLU	1
13	91.060.055	0	HLAVICE / HEAD / KOPF	SV. ZAVRA/OTEV	1
14	91.060.084 (1)	0	HLAVICE TOTAL STOP / TOTAL STOP HEAD / TASTE TOTAL STOP		1
15	91.071.022	0	VYHODKA / BUSHING / TÜLLE		3
16	91.072.016	0	MATICE / NUT / MUTTER		3
17	91.170.003	0	SPINAC NACRONY / CAM SWITCH / SCHALTER	LE2-12-1763	1
18	91.180.001	0	DESKA SPINACE / ELECTRIC BOARD / PLATINE		1
19	99.104.002	0	ZAMEK / LOCK / SCHLOSS	ZAMEK CINSKY	2
20	99.900.045	0	SAMOLEPKA / STICKER / AUFKLEBER		1
21	99.900.046	0	SAMOLEPKA / STICKER / AUFKLEBER		1

1.ZRUSENO 91.060.030 A NAHRAZENO 91.060.084. 235/ZM329 12.08.2019 KOSYK

Cisla Sestavy/Number of assembly/Nummer der Baugruppe; Verze (Ver.)/Version/Version; Nazev sestavy/Assembly title/Name der Baugruppe; Pozice (Poz.)/Position/Position; Objednaci cislo/Purchase order number/Bestellnummer; Nazev polozky/Volume title/Name der Position; Rozmer/Stock size/Abmessung

7.5. Ovladací panel / Control panel / Bedienpult

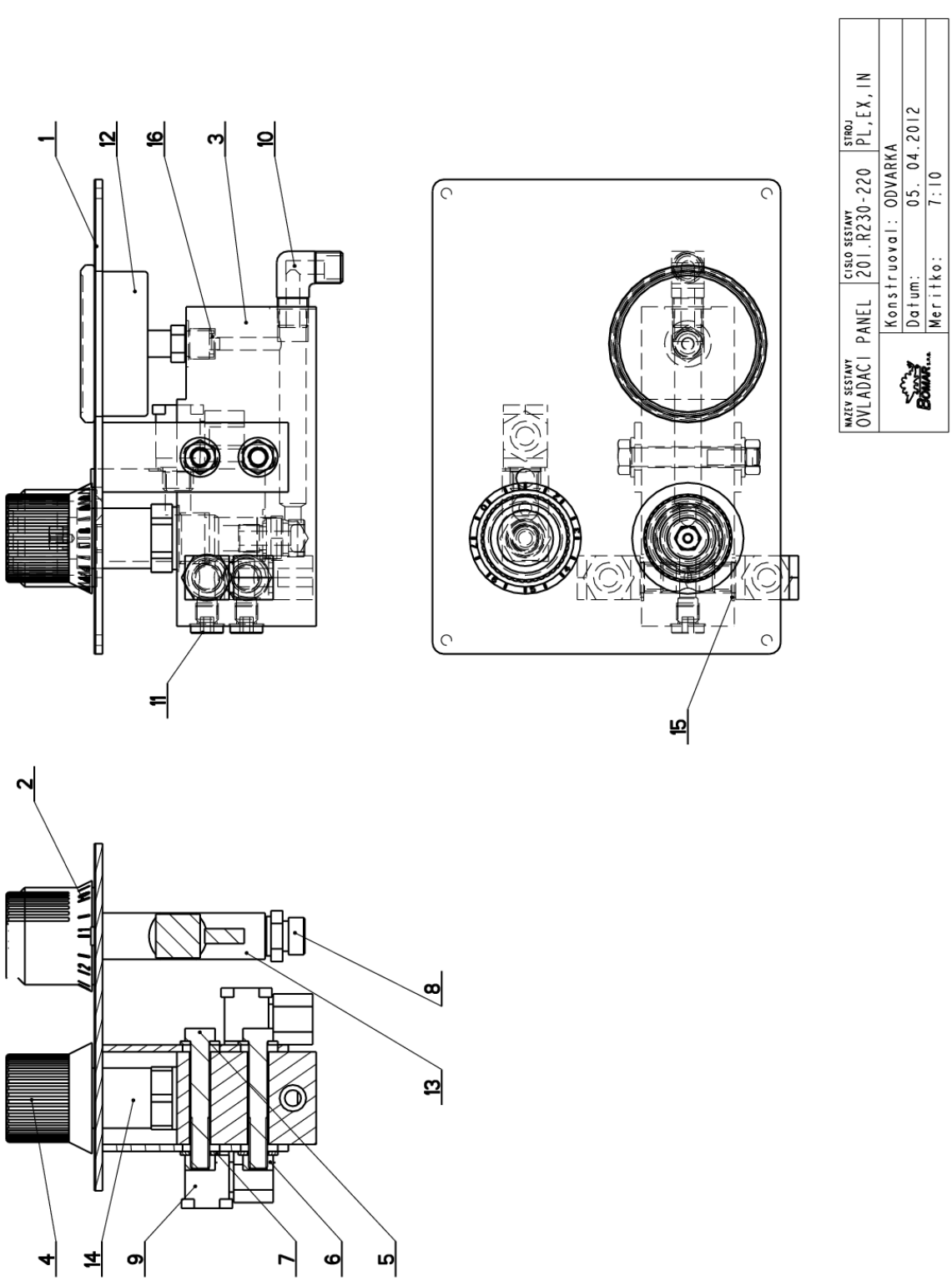

7.6. Kusovník / Piece list / Stückliste - Ovladací panel / Control panel / Bedienpult

Cislo Sestavy	Ver.	Nazev sestavy
201.R230-220	1	OVLADACI PANEL/CONTROL PANEL/BEDIENPULT

Poz.	Objednaci cislo	Ver.	Nazev polozky	Rozmer	Ks
1	251.652	0	PANEL / PANEL / PANEL		1
2	30.6130-018	0	HLAVICE / HEAD / KOPF	VYLISEK	1
3	30.6130-103	2	KOSTKA REGULACE / REGULATION CUBE / REGELUNGSWÜRFEL	TYC 60x40	1
4	31.6130-008	0	HLAVICE / HEAD / KOPF		1
5	90.005.55.064	0	SROUB 6HRANNY / 6 SIDED BOLT / SECHSKANTSCHRAUBE	SROUB M8X55	2
6	90.100.55.005	0	MATICE / NUT / MUTTER	MATICE _ M8	2
7	90.150.50.005	0	PODLOZKA / WASHER / UNTERLEGSCHEIBE	PODLOZKA 8,4	4
8	92.002.103	0	SROUBENI PRIME / DIRECT BOLTING / GERADE VERSCHRAUBUNG	G 1/4" tr12	1
9	92.003.001	0	SROUBENI UHLOVE / ANGLE BOLTING / WINKELVERSCHRAUBUNG	P-RSWS-08LR	3
10	92.004.001	0	SROUBENI UHLOVE / ANGLE BOLTING / WINKELVERSCHRAUBUNG	37701	1
11	92.019.003	0	ZATKA / PLUG / STOPFEN	G1/4" VNITRNI IMBUS	2
12	92.080.002	0	MANOMETR / MANOMETER / MANOMETER	d 63 - 60bar	1
13	92.152.001	0	VENTIL SKRTICI / CHOKE VALVE / DROSSELVENTIL	VS01-04/R 2.5-0	1
14	92.154.001	0	VENTIL REDUKCNI / REDUCTION VALVE / DRUCKMINDERUNGSVENTIL		1
15	96.082.002	0	TESNENI / SEALING / DICHTUNG	KROUZEK CU 13/17	4
16	96.082.005	0	KROUZEK TESNICI / SEAL RING / DICHTUNGSRING	5x8.8x1	2

Cislo Sestavy/Number of assembly/Nummer der Baugruppe; Verze (Ver.)/Version/Version; Nazev sestavy/Assembly title/Name der Baugruppe; Pozice (Poz.)/Position/Position; Objednaci cislo/Purchase order number/Bestellnummer; Nazev polozky/Volume title/Name der Position; Rozmer/Stock size/Abmessung

7.7. Sloup / Pole / Säule

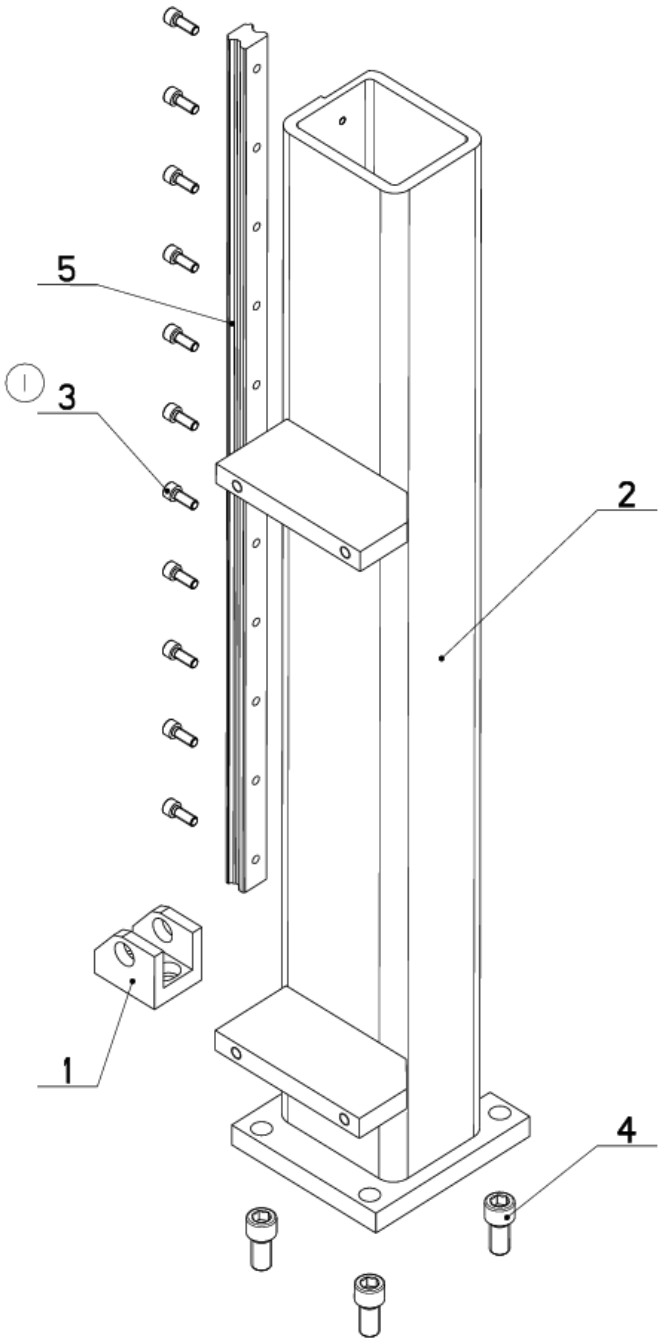

NAZEV SESTAVY	CISLO SESTAVY	STROJ
SLOUP	201.R402-020	PRL 450

Konstruoval: MUSIL
Datum: 23. 01.2015
Meritko: 3:10

7.8. Kusovník / Piece list / Stückliste - Sloup / Pole / Säule

Cislo Sestavy	Ver.	Nazev sestavy
201.R402-020	1	SLOUP/POLE/SÄULE

Poz.	Objednaci cislo	Ver.	Nazev polozky	Rozmer	Ks
1	30.0807-008	3	DRZAK / HOLDER / HALTER	HR 40x40	1
2	30.R402-021	3	SLOUP / POLE / SÄULE		1
3	90.001.25.017 (1)	0	SROUB IMBUS / ALLEN HEAD BOLT / IMBUSSCHRAUBE	M6X16	11
4	90.001.25.057	0	SROUB IMBUS / ALLEN HEAD BOLT / IMBUSSCHRAUBE	M12x25	4
5	99.200.207	0	VEDENI LINEARNI / LINEAR GUIDE / LINEARE FUHRUNG	MSA20R 640-20/20 N	1

1..PRIDAN 11xSROUB M6x16(90.001.25.017). 236/ZM010 23.1.2015 SLEZACKOVA

Cislo Sestavy/Number of assembly/Nummer der Baugruppe; Verze (Ver.)/Version/Version; Nazev sestavy/Assembly title/Name der Baugruppe; Pozice (Poz.)/Position/Position; Objednaci cislo/Purchase order number/Bestellnummer; Nazev polozky/Volume title/Name der Position; Rozmer/Stock size/Abmessung

7.9. Sloup / Pole / Säule

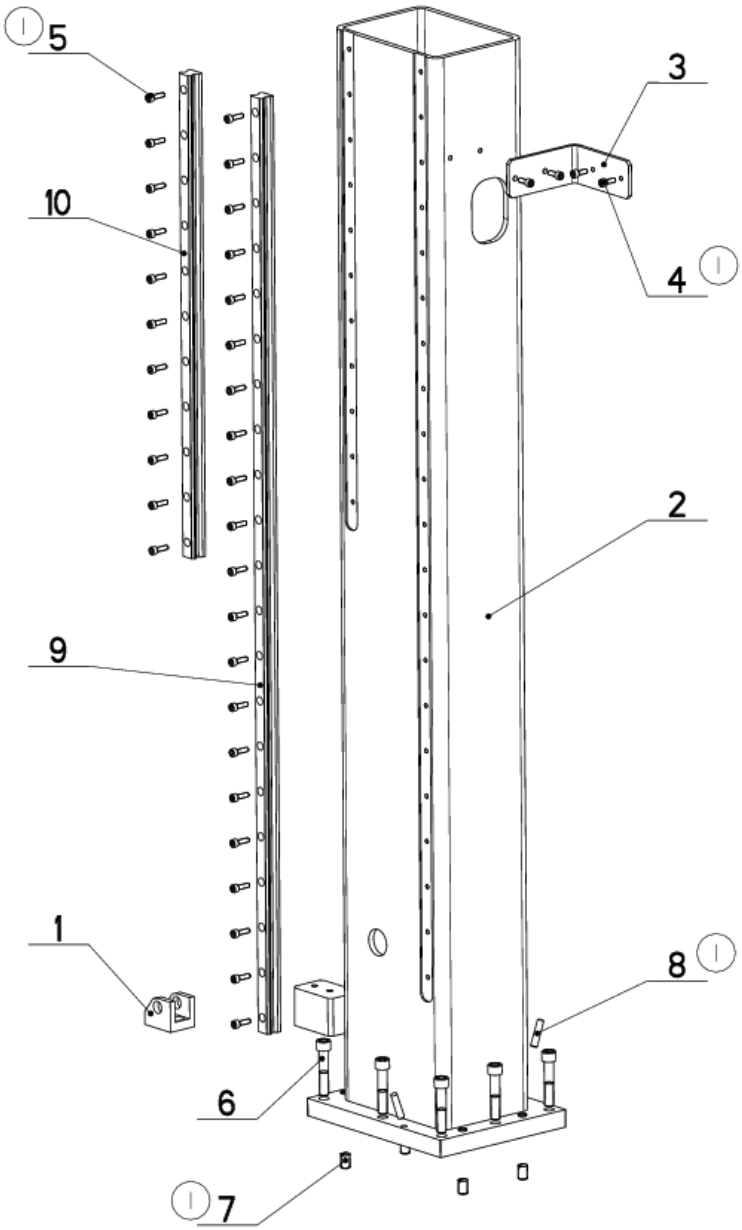

NAZEV SESTAVY	CISLO SESTAVY	STROJ
SLOUP	201.R402-050	PRL 450

BOMAR	Konstruoval: MUSIL
	Datum: 26. 01.2015
	Meritko: 7:50

7.10. Kusovník / Piece list / Stückliste - Sloup / Pole / Säule

Cislo Sestavy	Ver.	Nazev sestavy
201.R402-050	1	SLOUP/POLE/SÄULE

Poz.	Objednaci cislo	Ver.	Nazev polozky	Rozmer	Ks
1	30.0807-008	3	DRZAK / HOLDER / HALTER	HR 40x40	1
2	30.R402-051	2	SLOUP / POLE / SÄULE		1
3	30.Y404-005	0	DRZAK / HOLDER / HALTER	P 5x50	1
4	90.001.25.017 (1)	0	SROUB IMBUS / ALLEN HEAD BOLT / IMBUSSCHRAUBE	M6X16	4
5	90.001.25.018 (1)	0	SROUB IMBUS / ALLEN HEAD BOLT / IMBUSSCHRAUBE	M6X20	32
6	90.001.25.063	0	SROUB IMBUS / ALLEN HEAD BOLT / IMBUSSCHRAUBE	M12X60	8
7	90.002.2D.018 (1)	0	SROUB STAVECI / ADJUSTMENT BOLT / STELLSCHRAUBE	SROUB M12X20	4
8	90.302.0Z.003 (1)	0	KUZEL. KOLIK S ZAV. / TAPER PIN + THREAD / KEGELBOLZEN + GEWINDE	KOLIK 8X36	2
9	99.200.205	0	VEDENI LINEARNI / LINEAR GUIDE / LINEARE FÜHRUNG	MSA25R 1240-20/20 N	1
10	99.200.206	0	VEDENI LINEARNI / LINEAR GUIDE / LINEARE FÜHRUNG	MSA25R 640-20/20 N	1

1.PRID.4xSROUB M6x16(90.001.25.017).32xSROUB M6x20(90.001.25.018),4xSROUB STAVECI M12x20(90.002.2D.018),
2xKOLIK 8x36(90.302.0Z.003). 236/ZM010 26.1.2015 SLEZACKOVA

Cislo Sestavy/Number of assembly/Nummer der Baugruppe; Verze (Ver.)/Version/Version; Nazev sestavy/Assembly title/Name der Baugruppe; Pozice (Poz.)/Position/Position;
Objednaci cislo/Purchase order number/Bestellnummer; Nazev polozky/Volume title/Name der Position; Rozmer/Stock size/Abmessung

7.11. Svěrák / Vice / Schraubstock

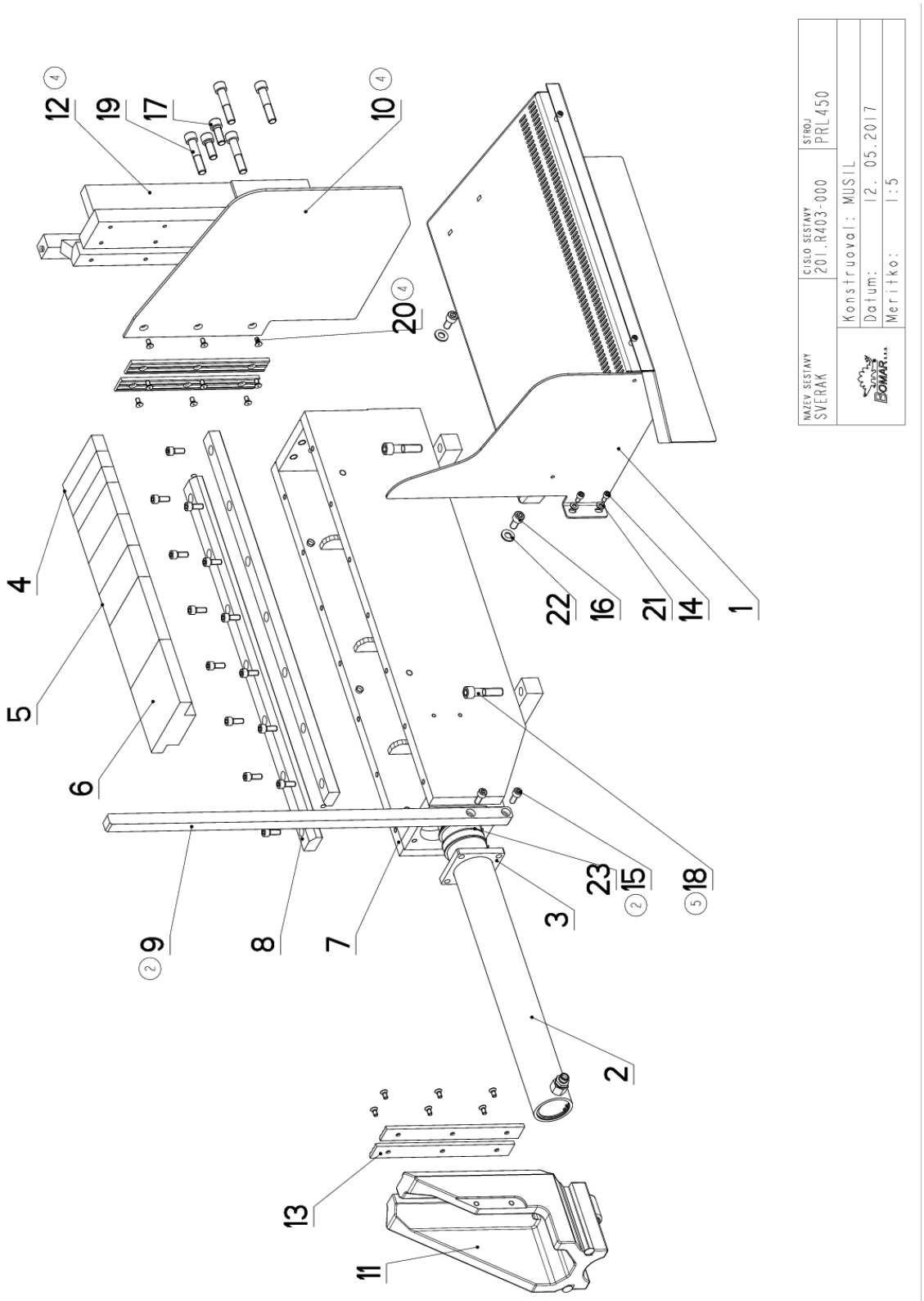

7.12. Kusovník / Piece list / Stückliste - Svěrák / Vice / Schraubstock

Cislo Sestavy	Ver.	Nazev sestavy
201.R403-000	5	SVERAK/VICE/SCHRAUBSTOCK

Poz.	Objednaci cislo	Ver.	Nazev polozky	Rozmer	Ks
1	201.R403-050	1	SKLUZ / SLIDE / RUTSCH		1
2	201.R407-030	0	VALEC SVERAKU / VICE CYLINDER / SCHRAUBSTOCKZYLINDER		1
3	30.2011-010	0	PRILOZKA / STRAP / LASCHE	HR 80x10	1
4	30.R303-016	1	VLOZKA / INSERT / EINLAGE	HR 40x30	3
5	30.R303-017	1	VLOZKA / INSERT / EINLAGE	TYC 60x40	3
6	30.R303-018	1	VLOZKA / INSERT / EINLAGE	HR 120x40	2
7	30.R403-001	9	SVERAK / VICE / SCHRAUBSTOCK		1
8	30.R403-004	1	VEDENI / GUIDE / BACKENFÜHRUNG	HR 40x25	2
9	30.R403-005 (2)	0	LISTA / TRIM / LEISTE	HR 20x20	1
10	30.R403-007 (4)	0	BOCNICE / /	P 4x380	1
11	30.R403-014	4	CELIST POHYBLIVA / MOVING JAW / BEWEGLICHE BACKE	ODLITEK	1
12	30.R403-018 (4)	2	CELIST PEVNA / /		1
13	30.R411-035	2	LISTA CELISTI / JAW TRIM / BACKENLEISTE	HR 30x10	4
14	90.001.25.016	0	SROUB IMBUS / ALLEN HEAD BOLT / IMBUSSCHRAUBE	M6X12	2
15	90.001.25.032 (2)	0	SROUB IMBUS / ALLEN HEAD BOLT / IMBUSSCHRAUBE	8x20	16
16	90.001.25.046	0	SROUB IMBUS / ALLEN HEAD BOLT / IMBUSSCHRAUBE	M10X20	2
17	90.001.25.058	0	SROUB IMBUS / ALLEN HEAD BOLT / IMBUSSCHRAUBE	M12X30	2
18	90.001.25.062 (5)	0	SROUB IMBUS / ALLEN HEAD BOLT / IMBUSSCHRAUBE	M12X50	4
19	90.001.25.063	0	SROUB IMBUS / ALLEN HEAD BOLT / IMBUSSCHRAUBE	M12X60	4
20	90.011.27.005 (4)	0	ZAPUSTNY IMBUS / COUNTERSINK BOLT / SENKSCHRAUBE	SROUB M6X12	15
21	90.150.50.004	0	PODLOZKA / WASHER / UNTERLEGSCHEIBE	PODLOZKA 6,4	2
22	90.150.50.006	0	PODLOZKA / WASHER / UNTERLEGSCHEIBE	PODLOZKA 10,5	2
23	95.800.021	0	SEGR HRIDEL. / SAFETY RING / SICHERUNGSRING	POJISTNY KROUZEK 62	1

1.ZRUS.CELIST 30.R403-012 A NAHR.30.R403-015,ZRUS.CELIST 30.R403-013 A NAHR.30.R403-016. 107/ZM110 19.5.2011 SLEZACKOVA

2.PRIDANO LISTA 30.R403-005, 2xSROUB M8x20 (90.001.25.032). 165/ZM194 20.7.2011 SLEZACKOVA

3.CELIST 30.R403-015 A 30.R403-016 NAHR. 30.R403-017,ZRUS.BOCNICE 30.5503-14 NAHR. 30.R403-006.196/ZM246 25.8.2012,ODVARKA

4.ZRUS.CELIST 30.R403-017 A NAHR.30.R403-018,ZRUS.BOCNICE 30.R303-015 A NAHR.30.R403-007,ZRUS.2xSROUB M6x16 (90.001.25.017) A NAHR.2xM6x12(90.011.27.005). 192/ZM226 30.10.2014 SLEZACKOVA

5.ZRUS.SROUB M12x35(90.001.059) A NAHR.M12x50(90.001.25.062). 107/ZM169 11.5.2017 SLEZACKOVA

Cislo Sestavy/Number of assembly/Nummer der Baugruppe; Verze (Ver.)/Version/Version; Nazev sestavy/Assembly title/Name der Baugruppe; Pozice (Poz.)/Position/Position; Objednaci cislo/Purchase order number/Bestellnummer; Nazev polozky/Volume title/Name der Position; Rozmer/Stock size/Abmessung

7.13. Skluz / Slide / Rutsch

Cislo Sestavy	Ver.	Nazev sestavy
201.R403-050	1	SKLUZ/SLIDE/RUTSCH

Poz.	Objednaci cislo	Ver.	Nazev polozky	Rozmer	Ks
1	30.3509-015	1	KROUZEK DISTANCNI / DISTANCE RING / DISTANZRING	TR 8x1	2
2	30.R403-051	0	STUL / TABLE / TISCH		1
3	30.R403-052	1	SKLUZ / SLIDE / RUTSCH	P 1.5x317	1
4	30.R403-053	1	BOCNICE / SIDE PLATE / SEITENTEIL	P 3x376	1
5	90.001.25.009 (1)	0	SROUB IMBUS CERNENY / ALLEN HEAD BOLT / IMBUSSCHRAUBE	M5X16	2

1.ZRUS.SROUB M6x16 (90.001.25.017) A NAHR.M5X16 (90.001.25.009). 191/ZM204 19.8.2011 SLEZACKOVA

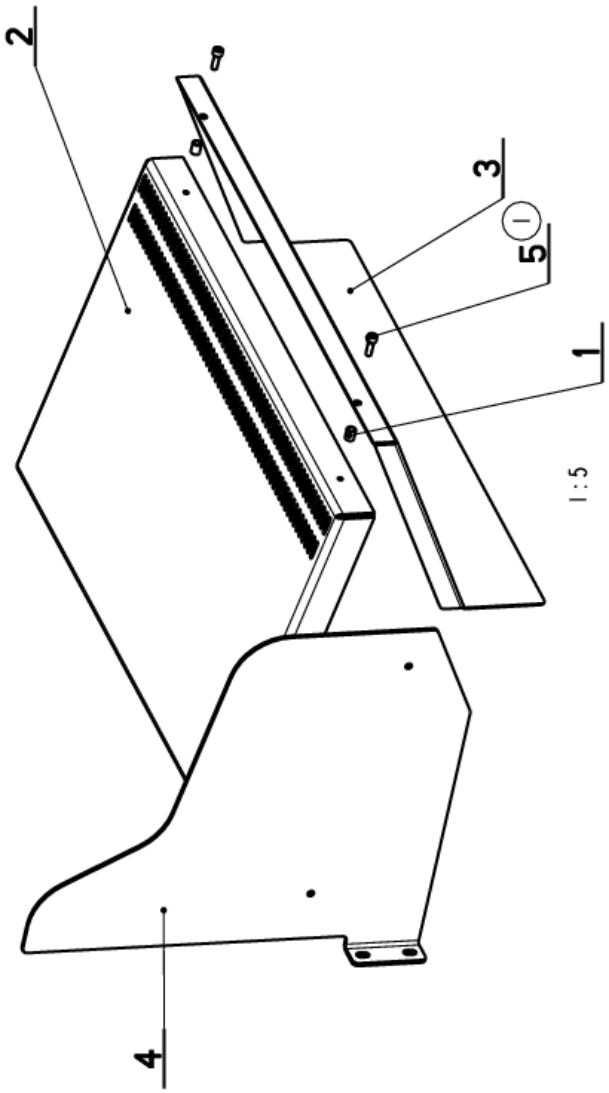

7.14. Válec svěráku / Vice cylinder / Schraubstockzylinder

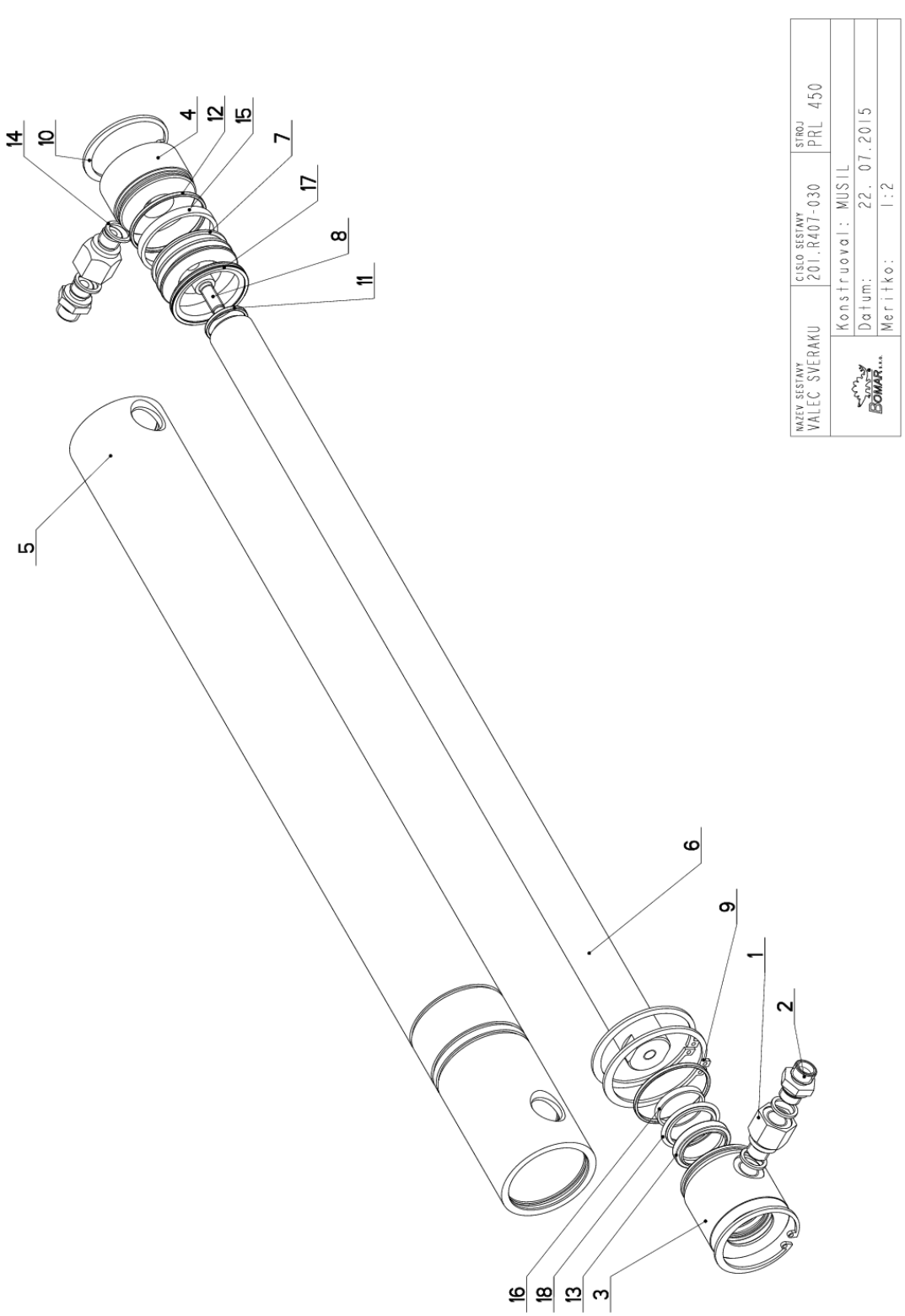

7.15. Kusovník / Piece list / Stückliste - Válec svěráku / Vice cylinder / Schraubstockzylinder

Cislo Sestavy	Ver.	Nazev sestavy
201.R407-030	0	VALEC SVERAKU/VICE CYLINDER/SCHRAUBSTOCKZYLINDER

Poz.	Objednaci cislo	Ver.	Nazev polozky	Rozmer	Ks
1	30.1807-005	3	SROUBENI / BOLTING / VERSCHRAUBUNG	6-HR 22	2
2	30.2807-109	0	SROUBENI PRIME / DIRECT BOLTING / GERADE VERSCHRAUBUNG		2
3	30.C407-012	2	VIKO / COVER / DECKEL	d 55	1
4	30.C407-111	0	VIKO / COVER / DECKEL	d 55	1
5	30.R407-033	1	VALEC SVERAKU / VICE CYLINDER / SCHRAUBSTOCKZYLINDER	TR 62/50	1
6	30.R407-034	0	PISTNICE / PISTON ROD / KOLBENSTANGE	d 28 f8	1
7	30.Y307-035	0	PIST / PISTON / KOLBEN	d 55	1
8	90.001.25.032	0	SROUB IMBUS / ALLEN HEAD BOLT / IMBUSSCHRAUBE	8x20	1
9	95.800.021	0	SEGR HRIDEL. / OUTSIDE SAFETY RING / SICHERUNGSRING AUSSEN	POJISTNY KROUZEK 62	2
10	95.801.009	0	SEGR DIRA / OUTSIDE SAFETY RING / SICHERUNGSRING AUSSEN	POJISTNY KROUZEK 52	2
11	96.002.011	0	KROUZEK O DYNAMICKY / DYNAMIC O RING / O-RING DYNAMISCH	24X2	1
12	96.002.019	0	KROUZEK O DYNAMICKY / DYNAMIC O RING / O-RING DYNAMISCH	46x2 NBR 70SH	2
13	96.061.009	0	KROUZEK STIRACI / SCRAPER RING / ABSTREIFRING	WD2200280 Z201	1
14	96.082.002	0	TESNENI / SEAL RING / DICHTUNGSRING	13/17x1.5 CU	4
15	96.084.001	0	KROUZEK VODICI / LEAD RING / FÜHRUNGSRING	GP6500500-T47	1
16	96.084.006	0	KROUZEK VODICI / LEAD RING / FÜHRUNGSRING	GR4300280-T47	1
17	96.900.001	0	TESNENI KOMBINOVANE / COMBINATION SEALING / KOMBIDICHTUNG	PW4200500-Z20N	1
18	96.900.021	0	TESNENI KOMBINOVANE / COMBINATION SEALING / KOMBIDICHTUNG	RSK200280-46N	1

Cislo Sestavy/Number of assembly/Nummer der Baugruppe; Verze (Ver.)/Version/Version; Nazev sestavy/Assembly title/Name der Baugruppe; Pozice (Poz.)/Position/Position; Objednaci cislo/Purchase order number/Bestellnummer; Nazev polozky/Volume title/Name der Position; Rozmer/Stock size/Abmessung

7.16. Válec zvedací / Lifting cylinder / Hebezylinder

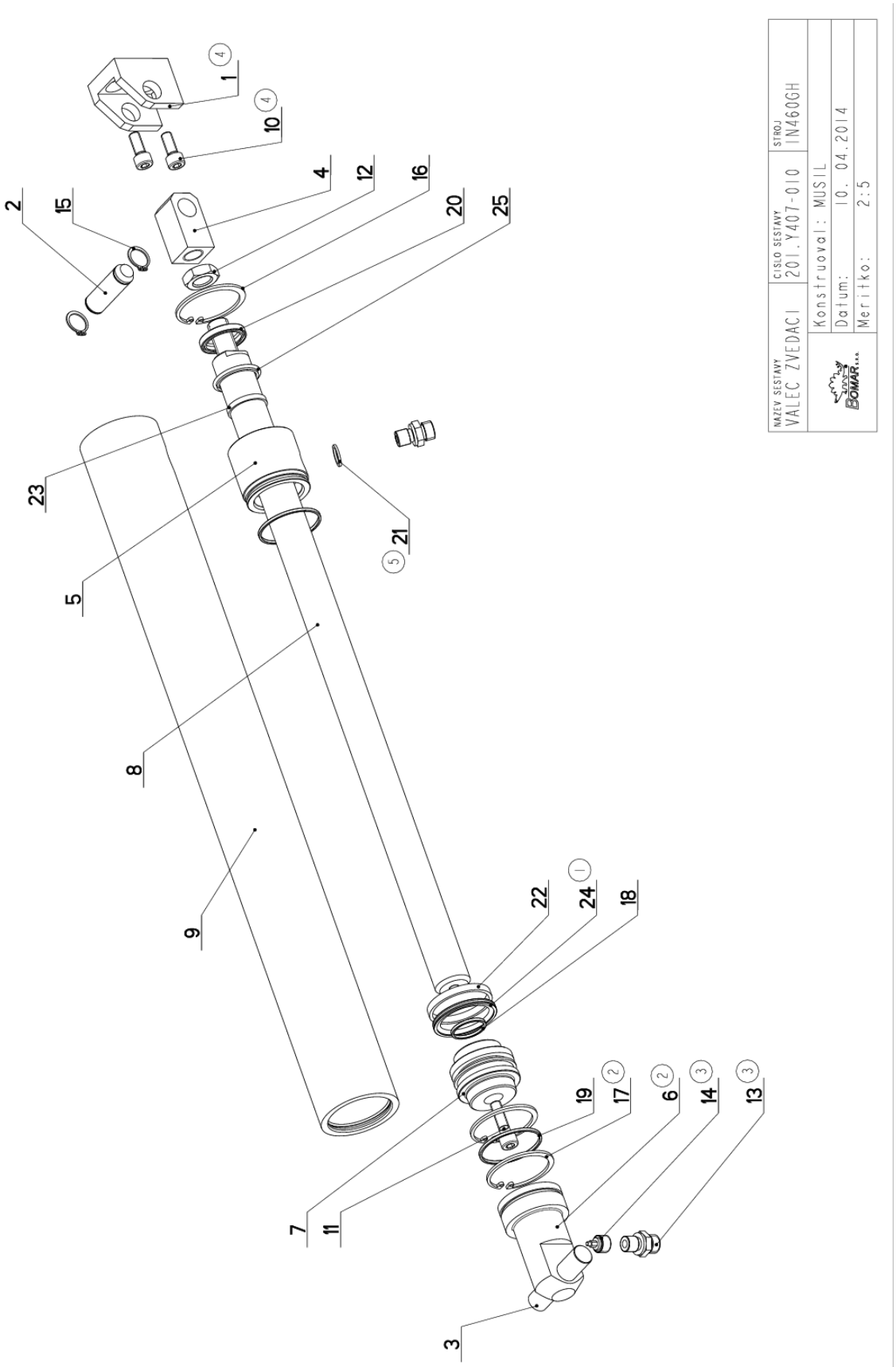

7.17. Kusovník / Piece list / Stückliste - Válec zvedací / Lifting cylinder / Hebezylinder

Cislo Sestavy	Ver.	Nazev sestavy
201.Y407-010	5	VALEC ZVEDACI/LIFTING CYLINDER/HEBEZYLINDER

Poz.	Objednaci cislo	Ver.	Nazev polozky	Rozmer	Ks
1	30.0807-008 (4)	3	DRZAK / HOLDER / HALTER	HR 40x40	1
2	30.0807-009	2	CEP / LUG / BOLZEN	d 16h9	1
3	30.8307-205	0	CEP / LUG / BOLZEN	d 16h9	1
4	30.8607-001	1	DRZAK / HOLDER / HALTER	HR 25x25	1
5	30.C407-012	2	VIKO / COVER / DECKEL	d 55	1
6	30.Y307-003 (2)	3	VIKO / COVER / DECKEL	d 55	1
7	30.Y307-012 (2)	1	PIST / PISTON / KOLBEN	d 55	1
8	30.Y407-002	0	PISTNICE / PISTON ROD / KOLBENSTANGE	d 28 f8	1
9	30.Y407-011	4	VALEC / ROLLER / ZYLINDER	TR 62/50H8	1
10	90.001.25.032 (4)	0	SROUB IMBUS / ALLEN HEAD BOLT / IMBUSSCHRAUBE	8x20	2
11	90.001.55.083	0	SROUB IMBUS / ALLEN HEAD BOLT / IMBUSSCHRAUBE	M8X30	1
12	90.101.55.003	0	MATICE / NUT / MUTTER	MATICE M16	1
13	92.002.001 (2)	0	SROUBENI PRIME / DIRECT BOLTING / GERADE VERSCHRAUBUNG	G 1/4"	2
14	92.151.008 (3)	0	VENTIL POJISTNY / SAFETY VALVE / SICHERUNGSVENTIL	VPN-H 1/4"	1
15	95.800.007	0	SEGR HRIDEL. / OUTSIDE SAFETY RING / SICHERUNGSRING AUSSEN	POJISTNY KROUZEK 16	2
16	95.801.009	0	SEGR DIRA / INSIDE SAFETY RING / SICHERUNGSRING INNEN	POJISTNY KROUZEK 52	1
17	95.801.018 (2)	0	KROUZEK POJIST.VNITR / INSIDE SAFETY RING / SICHERUNGSRING INNEN	POJISTNY KROUZEK 50	2
18	96.002.011	0	KROUZEK O DYNAMICKY / DYNAMIC O RING / O-RING DYNAMISCH	24X2	1
19	96.002.019	0	KROUZEK O DYNAMICKY / DYNAMIC O RING / O-RING DYNAMISCH	46x2 NBR 70SH	2
20	96.061.009	0	KROUZEK STIRACI / SCRAPER RING / ABSTREIFRING	WD2200280 Z201	1
21	96.082.002 (5)	0	TESNENI / SEAL RING / DICHTUNGSRING	13/17x1.5 CU	1
22	96.084.001	0	KROUZEK VODICI / LEAD RING / FÜHRUNGSRING	GP6500500-T47	1
23	96.084.006	0	KROUZEK VODICI / LEAD RING / FÜHRUNGSRING	GR4300280-T47	1
24	96.900.013 (1)	0	TESNENI KOMBINOVANE / COMBINATION SEALING / KOMBIDICHTUNG	PT0200500	1
25	96.900.021	0	TESNENI KOMBINOVANE / COMBINATION SEALING / KOMBIDICHTUNG	RSK200280-46N	1

1.ZRUSENO TESNENI 96.900.001 A NAHRAZENO 96.900.013. 336/ZM006 10.1.2011 SLEZACKOVA

2.ZRUS.REDUKCE 30.9107-509,SROUBENI 30.30.1807-005,ZRUS.VIKO 30.Y307-005 A NAHR.30.Y307-003,ZRUS.SROUBENI 92.003.001 A NAHR.92.002.001,ZRUS.PIST 30.LM07-504 A NAHR.30.Y307-012,ZRUS.1xPOJ.KROUZEK 95.801.009 A NAHR.95.801.018, PRID.1xKROUZEK 96.082.002. 026/ZM027 18.2.2011 SLEZACKOVA

3.VENTIL 92.151.001 PRECISLOVAN NA 92.151.008. 222/ZM212 30.7.2013 SLEZACKOVA

4.PRID.DRZAK 30.0807-008,2xSROUB M8x20(90.001.25.032). 062/ZM50 10.4.2014 SLEZACKOVA

5.ZRUS. 2xTESNENI 96.082.002. 290/ZM003 8.1.2019 SZABARI

Cislo Sestavy/Number of assembly/Nummer der Baugruppe; Verze (Ver.)/Version/Version; Nazev sestavy/Assembly title/Name der Baugruppe; Pozice (Poz.)/Position/Position; Objednaci cislo/Purchase order number/Bestellnummer; Nazev polozky/Volume title/Name der Position; Rozmer/Stock size/Abmessung

7.18. Podstavec / Base / Untersatz

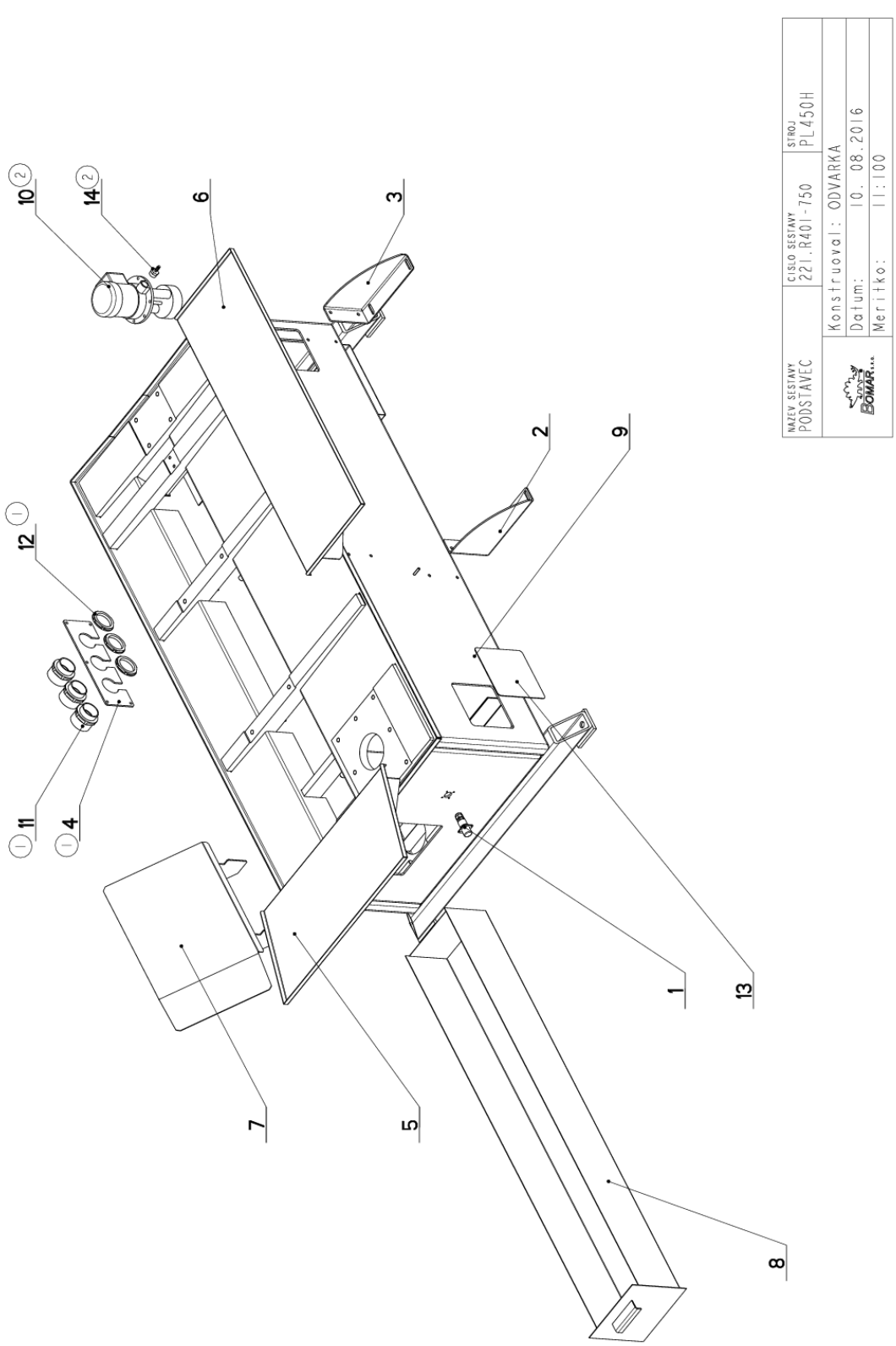

7.19. Kusovník / Piece list / Stückliste - Podstavec / Base / Untersatz

Cislo Sestavy	Ver.	Nazev sestavy
221.R401-750	2	PODSTAVEC/BASE/UNTERSATZ

Poz.	Objednaci cislo	Ver.	Nazev polozky	Rozmer	Ks
1	262.007	0	KONEKTOR / CONNECTOR / STECKVERBINDER		1
2	30.M201-005	2	DRZAK / HOLDER / HALTER	P 4x173	1
3	30.M201-006	2	DRZAK / HOLDER / HALTER	P 4x173	1
4	30.R201-056 (1)	1	VIKO / COVER / DECKEL	P 4x100	1
5	30.R301-053	1	KRYT / COVER / ABDECKUNG		1
6	30.R301-703	1	KRYT / COVER / ABDECKUNG		1
7	30.R314-260	0	KRYT / COVER / ABDECKUNG		1
8	30.R401-006	0	VANA / TANK / WANNE		1
9	30.R401-751	2	PODSTAVEC / BASE / UNTERSATZ		1
10	91.020.032 (2)	0	CERPADLO CHLAZENI / COOLING PUMP / KÜHLMITTELPUMPE	230/400V	1
11	91.071.022 (1)	0	VYVODKA / BUSHING / TÜLLE		3
12	91.072.016 (1)	0	MATICE / NUT / MUTTER		3
13	94.101.039	0	ZASLEPKA / PLUG / BLINDFLANSCH	154x154x4	1
14	94.202.020 (2)	0	REDUKCE / REDUCTION / ADAPTOR / REDUKTION	1/2"-6	1

1.ZRUS.KONZOLA 30.R301-704,30.R301-705,PRID.VIKO 30.R201-056,3xVYVODKA 91.071.022,3xMATICE 91.072.016.
104/ZM073 13.4.2015 SLEZACKOVA
2.ZRUS.CERPADLO 91.020.015 A NAHR.91.020.032,PRID.REDUKCE 94.202.020. 001/Z M.. SLEZACKOVA

Cislo Sestavy/Number of assembly/Nummer der Baugruppe; Verze (Ver.)/Version/Version; Nazev sestavy/Assembly title/Name der Baugruppe; Pozice (Poz.)/Position/Position; Objednaci cislo/Purchase order number/Bestellnummer; Nazev polozky/Volume title/Name der Position; Rozmer/Stock size/Abmessung

7.20. Odměřování / Measuring / Gehrungsmessung

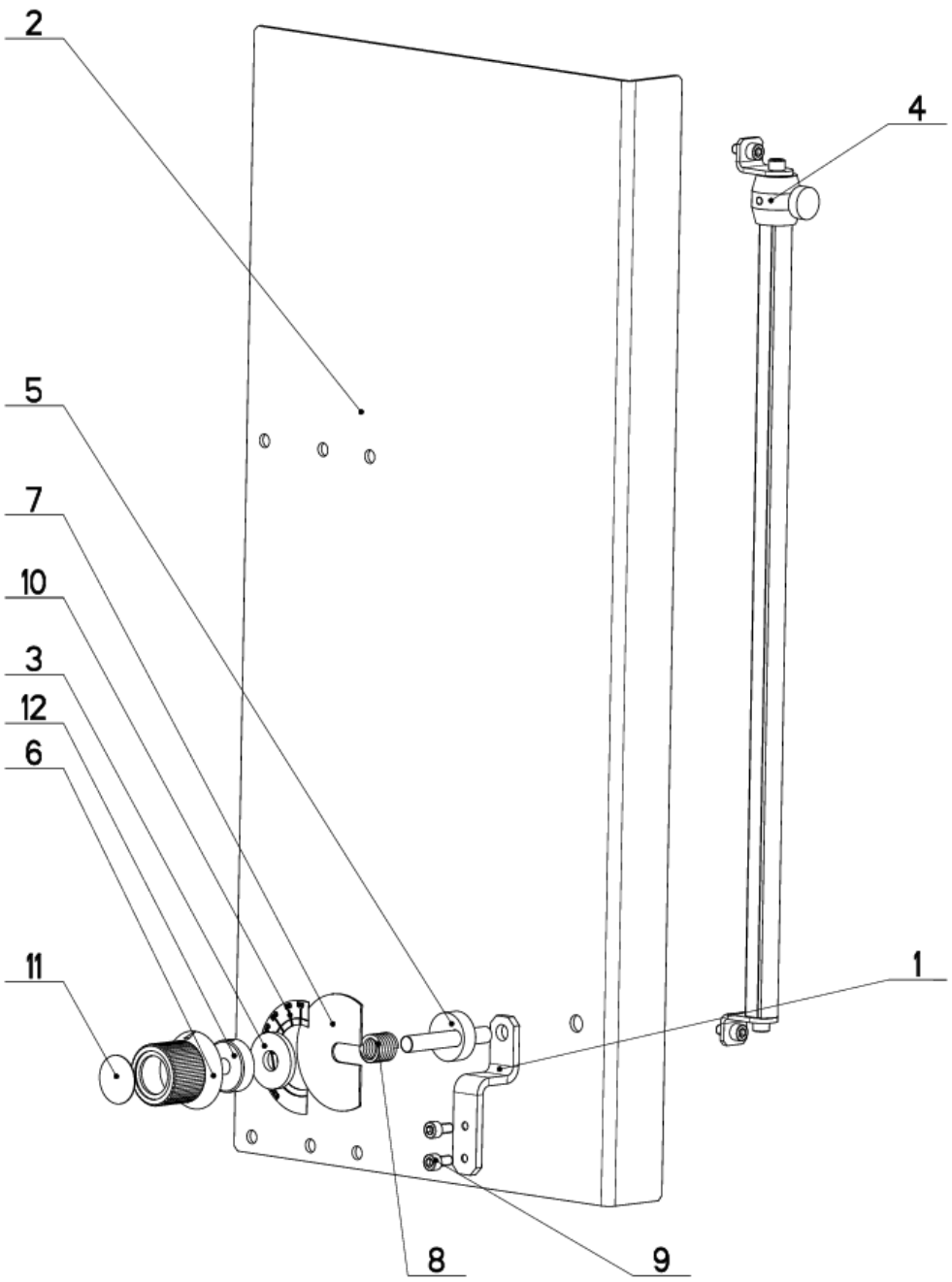

NAZEV SESTAVY	CISLO SESTAVY	STROJ
ODMEROVANI	221.R402-730	Prolin450H

Konstruoval:	KOLESA
Datum:	31. 07.2015
Meritko:	3:10

7.21. Kusovník / Piece list / Stückliste - Odměřování / Measuring / Gehrungsmessung

Cislo Sestavy	Ver.	Nazev sestavy
221.R402-730	2	ODMEROVANI/POLE/SÄULE

Poz.	Objednaci cislo	Ver.	Nazev polozky	Rozmer	Ks
1	30.R202-031	0	DRZAK / HOLDER / HALTER	HR 20x5	1
2	30.R314-701	1	DRZAK / HOLDER / HALTER	P 3x361	1
3	31.K107-006	1	GUMA / RUBBER / GUMMI	d35	1
4	201.Y402-070	1	ODMEROVANI / MEASURING / GEHRUNGSMESSUNG	SESTAVA	1
5	30.R202-033	1	OSA / AXLE / ACHSE	SVARENO	1
6	30.6130-020	0	OVLADANI / CONTROLS / STEUERUNG	VYLISEK	1
7	30.Y302-153	0	PODLOZKA / WASHER / UNTERLEGSCHEIBE	P 1,5x72	1
8	31.T302-054	0	PRUZINA / SPRING / FEDER	d 2.24	1
9	90.001.25.016	0	SROUB IMBUS / ALLEN HEAD BOLT / IMBUSSCHRAUBE	M6X12	2
10	30.R402-034	0	STUPNICE / SCALE / SKALA	P1x41	1
11	30.6130-012	0	VIKO / COVER / DECKEL	P 0.5x 30x30	1
12	30.Y302-058	1	VLOZKA / INSERT / EINLAGE	d 32	1

Cislo Sestavy/Number of assembly/Nummer der Baugruppe; Verze (Ver.)/Version/Version; Nazev sestavy/Assembly title/Name der Baugruppe; Pozice (Poz.)/Position/Position; Objednaci cislo/Purchase order number/Bestellnummer; Nazev polozky/Volume title/Name der Position; Rozmer/Stock size/Abmessung

7.22. Odměřování / Measuring / Gehrungsmessung

Cislo Sestavy	Ver.	Nazev sestavy
201.Y402-070	1	ODMEROVANI/MEASURING/GEHRUNGSMESSUNG

Poz.	Objednaci cislo	Ver.	Nazev polozky	Rozmer	Ks
1	30.6114-023	0	DRZAK / HOLDER / HALTER	P 3x20	2
2	30.Y402-071	1	TYC / POLE / STANGE	d 20	1
3	30.2014-001	0	OBJIMKA / CLAMP / KLAMMERSTÜCK	Ø30-32	1
4	90.001.25.092	0	SROUB IMBUS / ALLEN HEAD BOLT / IMBUSSCHRAUBE	M6X14	4
5	94.007.001	0	SROUB / BOLT / SCHRAUBE	M5x10	1
6	99.120.001 (1)	0	PRAVITKO / RULER / SKALENBANDMAß	0.5m	1

1.PRIDANO PRAVITKO 99.120.001. 138/ZM144 19.5.2010 SLEZACKOVA

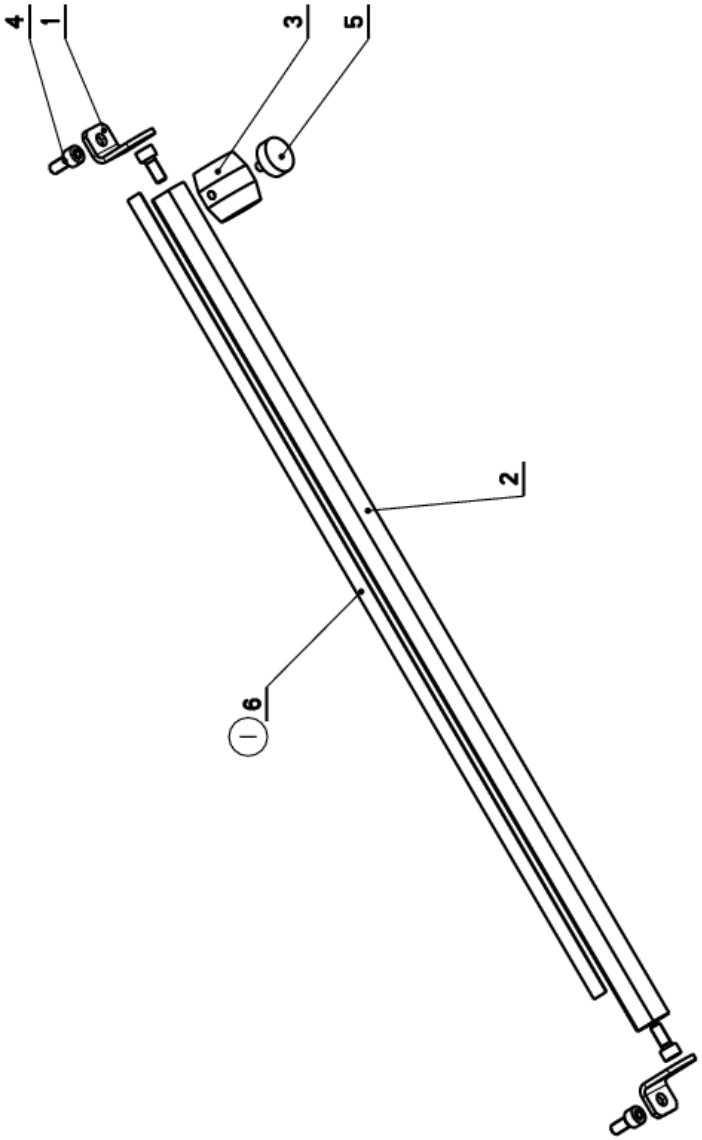

7.23. Rameno / Saw arm / Sagerahmen

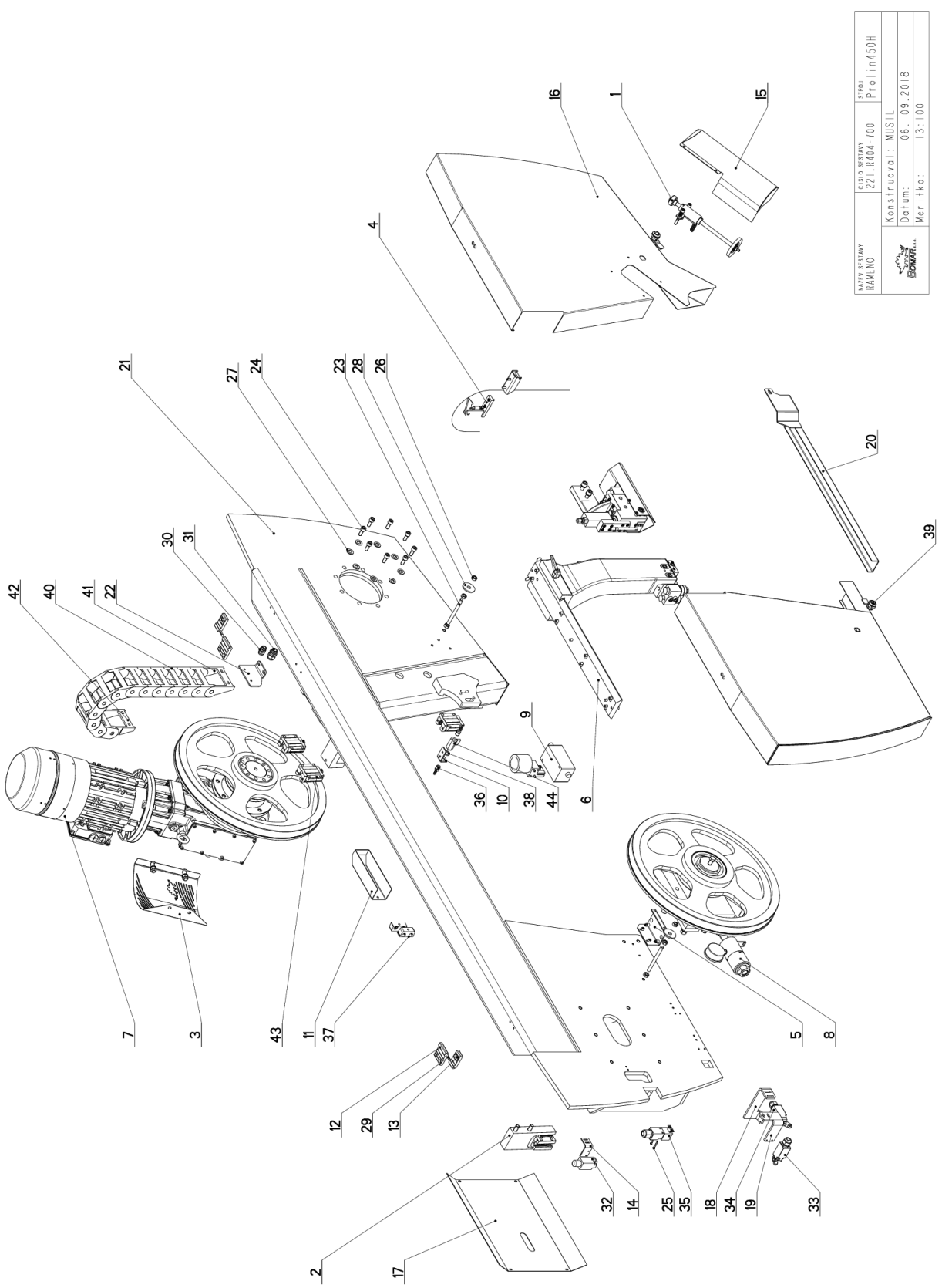

7.24. Kusovník / Piece list / Stückliste - Rameno / Saw arm / Sagerahmen

Cislo Sestavy	Ver.	Nazev sestavy
221.R404-700	5	RAMENO/SAW ARM/SAGERAHMEN

Poz.	Objednaci cislo	Ver.	Nazev polozky	Rozmer	Ks
1	201.9214-300	0	KARTAC / BRUSH / BÜRSTE		1
2	201.R404-020	0	KONZOLA / CONSOLE / KONSOLE		1
3	201.R404-022 (4)	0	KRYT / COVER / ABDECKUNG		1
4	201.R404-050 (2)	0	ZAMEK / LOCK / SCHLOSS		1
5	201.R404-070	0	DRZAK / HOLDER / HALTER		1
6	201.R410-000	0	VEDENI PASU / BELT GUIDE / SÄGEBANDFÜHRUNG		1
7	201.Y405-200	1	POHON / DRIVE / ANTRIEB		1
8	201.Y408-000	0	NAPINANI / TENSIONING / SPANNUNG		1
9	202.6914-100	1	KONTROLA VYCHYLENI PASU / BELT / KONTROLLE DER SÄGEBANDAUSLENKUNG		1
10	30.1814-011	1	DRZAK / HOLDER / HALTER	P 3x76	1
11	30.8914-220	1	KRYT / COVER / ABDECKUNG	P 1.5x153	1
12	30.R304-006	2	PANT / BOARD / PLATTE	PROFIL	2
13	30.R304-007	1	PANT / BOARD / PLATTE	PROFIL	2
14	30.R404-003	0	DRZAK / HOLDER / HALTER	P 3x30	1
15	30.R404-009 (3)	0	KRYT KARTACKU / BRUSH COVER / BÜRSTENABDECKUNG		1
16	30.R404-011	2	KRYT / COVER / ABDECKUNG		1
17	30.R404-017	1	KRYT NAPINANI / TENSIONING COVER / BANDSPANNUNGSABDECKUNG	P 1.5x381	1
18	30.R404-040	1	DRZAK / HOLDER / HALTER	P 6x85	1
19	30.R404-041	0	DRZAK / HOLDER / HALTER	P 80x6	1
20	30.R404-066 (3)	0	KRYT PASU / BELT COVER / BANDABDECKUNG		1
21	30.R404-101	1	RAMENO / SAW ARM / SÄGERAHMEN		1
22	30.T304-014	0	DRZAK / HOLDER / HALTER	P 4x100	1
23	30.Y304-018	0	TYC ZAVITOVA / THREADED POLE / GEWINDESTANGE	M10	2
24	90.001.25.047	0	SROUB IMBUS / ALLEN HEAD BOLT / IMBUSSCHRAUBE	M10X25	8
25	90.013.9Z.104 (5)	0	SROUB PULKULATY / HALF ROUND BOLT / HALBRUNDSCHRAUBE	M4x30	2
26	90.100.55.006	0	MATICE / NUT / MUTTER	MATICE _ M10	6
27	90.150.50.007	0	PODLOZKA / WASHER / UNTERLEGSCHEIBE	PODLOZKA 13	8
28	90.151.50.002	0	PODLOZKA / WASHER / UNTERLEGSCHEIBE	PODLOZKA 12	2
29	90.307.0Z.001	0	KOLIK / PIN / BOLZEN	D6	2
30	91.070.011	0	VYVODKA / BUSHING / TÜLLE	M16x1.5	1
31	91.070.012	0	VYVODKA / BUSHING / TÜLLE	M20x1.5	1
32	91.173.007	0	SPINAC KONCOVY / END SWITCH / ENDSCHALTER		1
33	91.173.008	0	SPINAC KONCOVY / END SWITCH / ENDSCHALTER		1

Cislo Sestavy/Number of assembly/Nummer der Baugruppe; Verze (Ver.)/Version/Version; Nazev sestavy/Assembly title/Name der Baugruppe; Pozice (Poz.)/Position/Position; Objednaci cislo/Purchase order number/Bestellnummer; Nazev polozky/Volume title/Name der Position; Rozmer/Stock size/Abmessung

7.25. Rameno / Saw arm / Sagerahmen

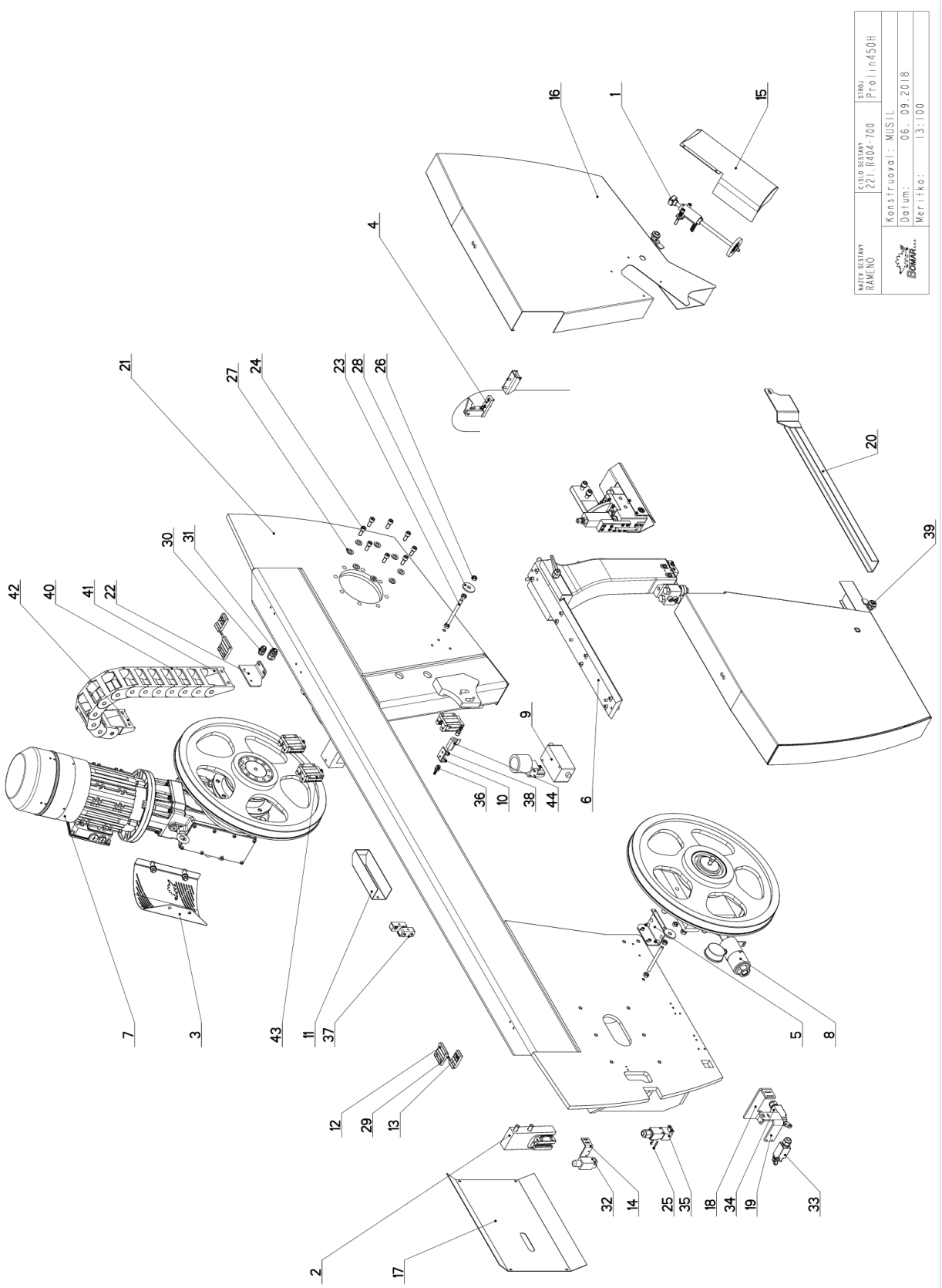

7.26. Kusovník / Piece list / Stückliste - Rameno / Saw arm / Sagerahmen

34	91.173.009	0	SPINAC KONC.S KLADK. / END SWITCH WITH PULLEY / ENDSCHALTER MIT ROLLE	PZ-FR605-M2	1
35	91.173.012	0	SPINAC KONCOVY / END SWITCH / ENDSCHALTER		1
36	94.202.002	0	REDUKCE / REDUCTION / ADAPTOR / REDUKTION	REDUKCE 6/R1/4"	2
37	94.204.005	0	DRZAK / HOLDER / HALTER	LBG 14/14-PP	2
38	96.081.001	0	KROUZEK TESNICI / SEAL RING / DICHTUNGSRING	23x15x3	1
39	99.104.002	0	ZAMEK / LOCK / SCHLOSS	ZAMEK CINSKY	2
40	99.170.001	0	RETEZ ENERGII / ENERGY BELT / ENERGIEKETTE	0555.030.075.100	12
41	99.173.001	0	RETEZ ENERGII / ENERGY BELT / ENERGIEKETTE	KONCOVKA VNEJ	1
42	99.173.002	0	RETEZ ENERGII / ENERGY BELT / ENERGIEKETTE	KONCOVKA VNIT	1
43	99.201.046	0	VEDENI LINEARNI / LINEAR GUIDE / LINEARE FÜHRUNG	MSA25E SS F0 N	3
44	99.260.003	0	VENTIL / VALVE / VENTIL	1/4"	1

1.ZRUS.KRYT PASU 30.Y404-009 A NAHR.30.R404-012. 002/ZM016 30.1.2013 SLEZACKOVA

2.PRID.ZAMEK 201.R404-050. 067/ZM081 15.3.2013 SLEZACKOVA

3.ZRUS.KRYT PASU 30.R404-012 A NAHR.30.R404-066,ZRUS.KRYT KARTACKU 30.M404-009A NAHR.30.R404-009. 090/ZM110 19.5.2014 SLEZACKOVA

4.PRIDAN KRYT PREVODOVKY 201.R404-022. 005/ZM073 13.4.2015 SLEZACKOVA

5. PRID. 2X SROUB M4X30 171/ZM298 24.08.2018 NEDUCHAL

Cislo Sestavy/Number of assembly/Nummer der Baugruppe; Verze (Ver.)/Version/Version; Nazev sestavy/Assembly title/Name der Baugruppe; Pozice (Poz.)/Position/Position; Objednaci cislo/Purchase order number/Bestellnummer; Nazev polozky/Volume title/Name der Position; Rozmer/Stock size/Abmessung

7.27. Kartáč / Brush / Bürste

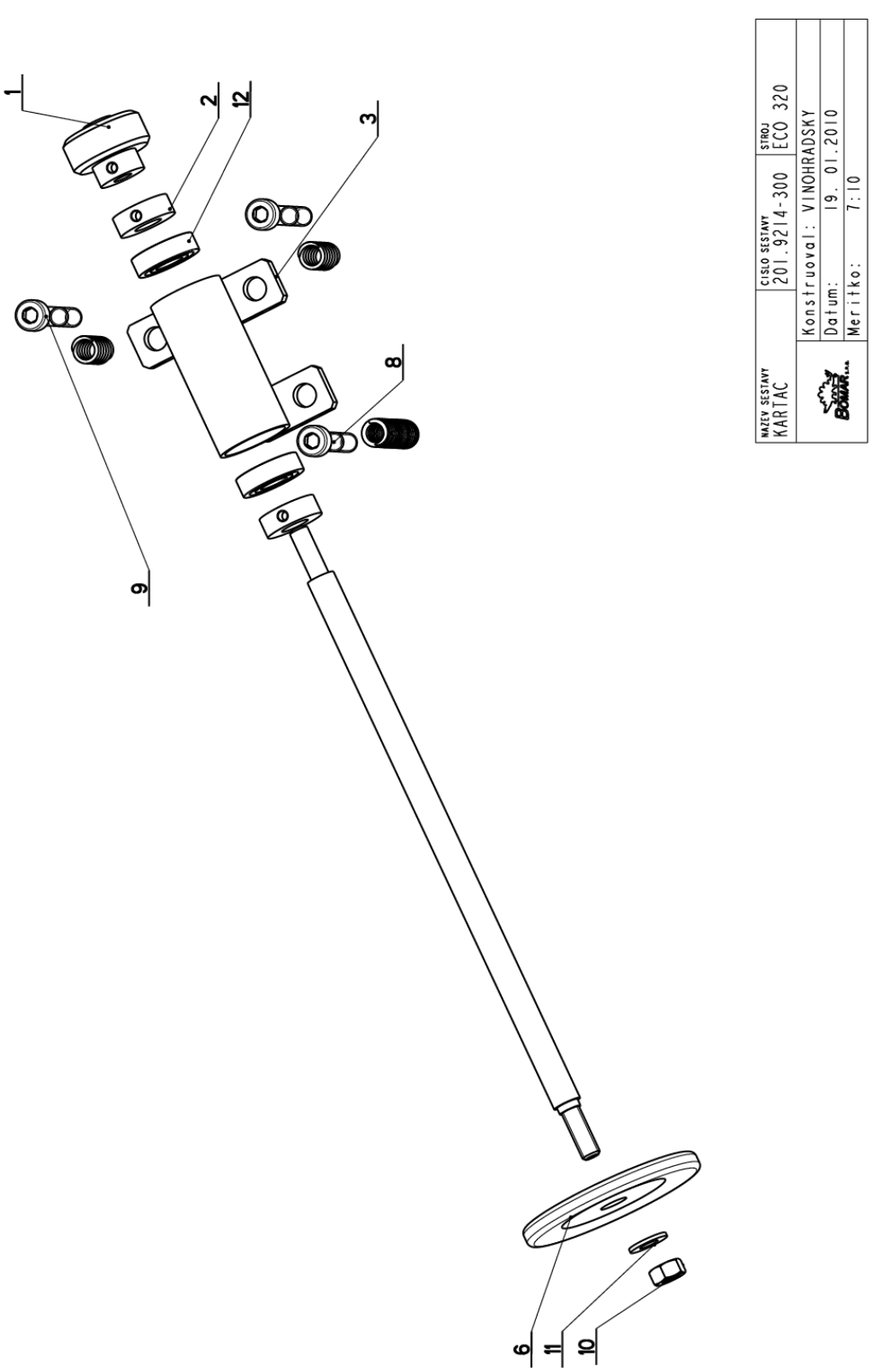

7.28. Kusovník / Piece list / Stückliste - Kartáč / Brush / Bürste

Cislo Sestavy	Ver.	Nazev sestavy
201.9214-300	0	KARTAC/BRUSH/BÜRSTE

Poz.	Objednaci cislo	Ver.	Nazev polozky	Rozmer	Ks
1	30.0814-204	0	KOLECKO / WHEEL / ROLLE	SESTAVA	1
2	30.0814-207	0	KROUZEK / RING / RING	d 25	2
3	30.9214-301	1	DRZAK / HOLDER / HALTER		1
4	30.9214-302	1	HRIDEL / SHAFT / WELLE	D 12	1
5	31.0305-211	0	PRUZINA / SPRING / FEDER	2x12x50x15,5	1
6	31.0814-208	0	KARTAC / BRUSH / BÜRSTE		1
7	31.1506-115	0	PRUZINA / SPRING / FEDER	1.6x12x25x7.5	2
8	90.001.25.038	0	SROUB IMBUS / ALLEN HEAD BOLT / IMBUSSCHRAUBE	M8X50	1
9	90.001.25.040	0	SROUB IMBUS / ALLEN HEAD BOLT / IMBUSSCHRAUBE	M8X60	2
10	90.100.55.005	0	MATICE / NUT / MUTTER	MATICE _ M8	1
11	90.150.50.005	0	PODLOZKA / WASHER / UNTERLEGSCHEIBE	PODLOZKA 8,4	1
12	95.001.005	0	LOZISKO / BEARING / LAGER	6001 2RS	2

7.29. Kolečko / Wheel / Rolle

Cislo Sestavy	Ver.	Nazev sestavy
201.0814-204	0	KOLECKO/WHEEL/ROLLE

Poz.	Objednaci cislo	Ver.	Nazev polozky	Rozmer	Ks
1	30.0814-204.1	0	KOLECKO / /	d 35	1
2	30.0814-204.2	0	NABOJ / /	d 20	1

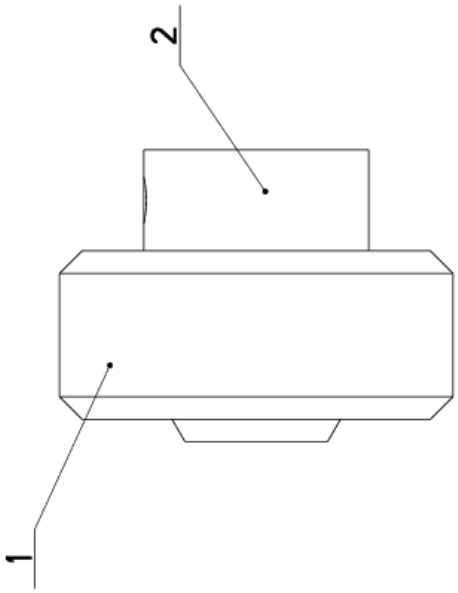

Cislo Sestavy/Number of assembly/Nummer der Baugruppe; Verze (Ver.)/Version/Version; Nazev sestavy/Assembly title/Name der Baugruppe; Pozice (Poz.)/Position/Position; Objednaci cislo/Purchase order number/Bestellnummer; Nazev polozky/Volume title/Name der Position; Rozmer/Stock size/Abmessung

7.30. Konzola / Console / Konsole

Číslo Sestavy	Ver.	Název sestavy
201.R404-020	0	KONZOLA/CONSOLE/KONSOLE

Poz.	Objednací číslo	Ver.	Název polozky	Rozmer	Ks
1	30.R404-021	0	KONZOLA / CONSOLE / KONSOLE	HR 80x30	1
2	90.001.25.063	0	SROUB IMBUS / ALLEN HEAD BOLT / IMBUSSCHRAUBE	M12X60	2
3	99.201.045	0	VOZIK LINEARNIHO VEDENI / LINEAR GUIDE CART / LINEARFÜHRUNGSWAGEN	MSA20A SS F1 N	1

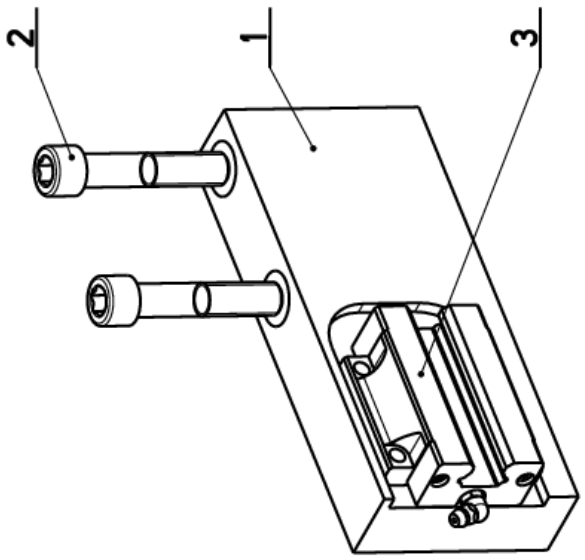

Číslo Sestavy/Number of assembly/Nummer der Baugruppe; Verze (Ver.)/Version/Version; Název sestavy/Assembly title/Name der Baugruppe; Pozice (Poz.)/Position/Position;
Objednací číslo/Purchase order number/Bestellnummer; Název polozky/Volume title/Name der Position; Rozmer/Stock size/Abmessung

7.31. Kryt / Cover / Abdeckung

Cislo Sestavy
201.R404-022

Ver.
0

Nazev sestavy
KRYT/COVER/ABDECKUNG

Poz.	Objednaci cislo	Ver.	Nazev polozky	Rozmer	Ks
1	30.R404-023	0	PLECH / PLATE / BLECH	P1x238	1
2	90.013.27.29	0	SROUB / BOLT / SCHRAUBE	M12X40_ISO_7380	2
3	90.100.55.007	0	MATICE / NUT / MUTTER	MATICE _ M12	2
4	90.152.50.006	0	PODLOZKA / WASHER / UNTERLEGSCHEIBE	M12 DIN6798	2

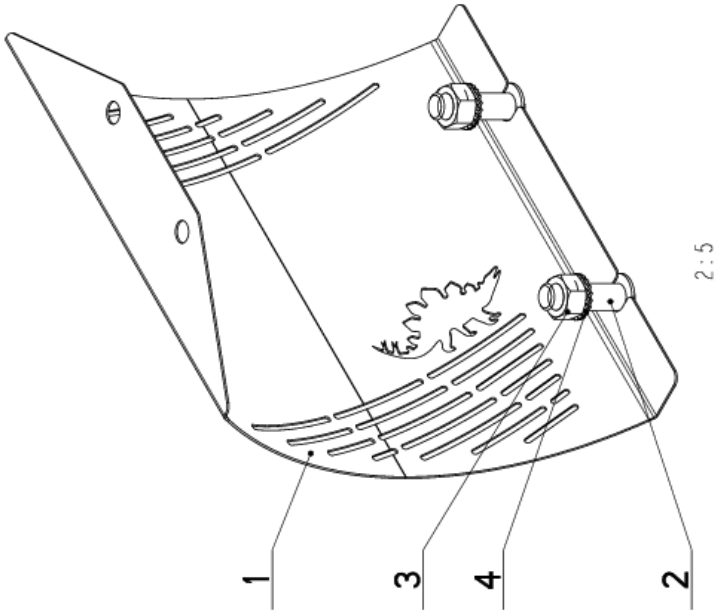

Cislo Sestavy/Number of assembly/Nummer der Baugruppe; Verze (Ver.)/Version/Version; Nazev sestavy/Assembly title/Name der Baugruppe; Pozice (Poz.)/Position/Position;
Objednaci cislo/Purchase order number/Bestellnummer; Nazev polozky/Volume title/Name der Position; Rozmer/Stock size/Abmessung

7.32. Zámek / Lock / Schloss

Cislo Sestavy
201.R404-050

Ver.
0

Nazev sestavy
ZAMEK/LOCK/SCHLOSS

Poz.	Objednaci cislo	Ver.	Nazev polozky	Rozmer	Ks
1	30.R404-051	0	DRZAK / HOLDER / HALTER		1
2	30.R404-052	0	KONZOLA / CONSOLE / KONSOLE		1
3	30.R404-053	0	PAKA / LEVER / HEBEL	P 6x39,2	1
4	31.1605-128		PRUZINA TAZNA / /	1x10x50x22	1
5	90.001.25.009	0	SROUB IMBUS / ALLEN HEAD BOLT / IMBUSSCHRAUBE	M5X16	1
6	90.001.25.017	0	SROUB IMBUS / ALLEN HEAD BOLT / IMBUSSCHRAUBE	M6X16	4
7	90.100.55.003	0	MATICE / NUT / MUTTER	MATICE - M5	1
8	90.301.02.007	0	KOLIK VALCOVY / CYLINDRICAL PIN SOFT / ZYLINDERSTIFT WEICH	KOLIK 8X16	1

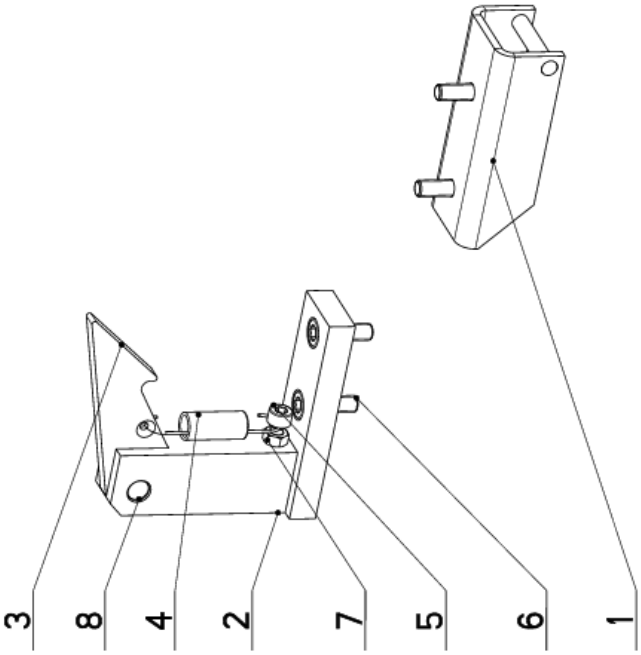

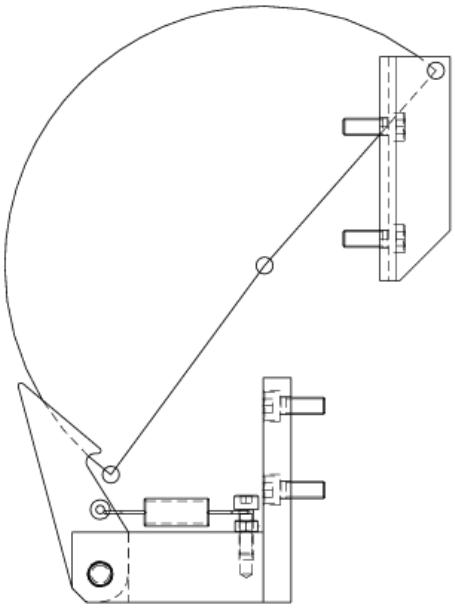

Cislo Sestavy/Number of assembly/Nummer der Baugruppe; Verze (Ver.)/Version/Version; Nazev sestavy/Assembly title/Name der Baugruppe; Pozice (Poz.)/Position/Position;
Objednaci cislo/Purchase order number/Bestellnummer; Nazev polozky/Volume title/Name der Position; Rozmer/Stock size/Abmessung

7.33. Držák / Holde / Halter

Cislo Sestavy
201.R404-070

Ver.
0

Nazev sestavy
DRZAK/HOLDER/HALTER

Poz.	Objednaci cislo	Ver.	Nazev polozky	Rozmer	Ks
1	30.R404-071	0	DRZAK / HOLDER / HALTER	P3 - 100	1
2	90.001.25.016	0	SROUB IMBUS / ALLEN HEAD BOLT / IMBUSSCHRAUBE	M6X12	2
3	90.011.27.024	0	SROUB ZAPUSTNY / COUNTERSINK BOLT / SENKSCHRAUBE	SROUB M5X20	2
4	90.100.55.003	0	MATICE / NUT / MUTTER	MATICE - M5	2
5	90.163.00.006	0	DISTANC / DISTANCE / DISTANZ	TR 10/5.3	2
6	94.101.029	0	ZATKA / PLUG / STOPFEN	PRO IMBUS M8	6

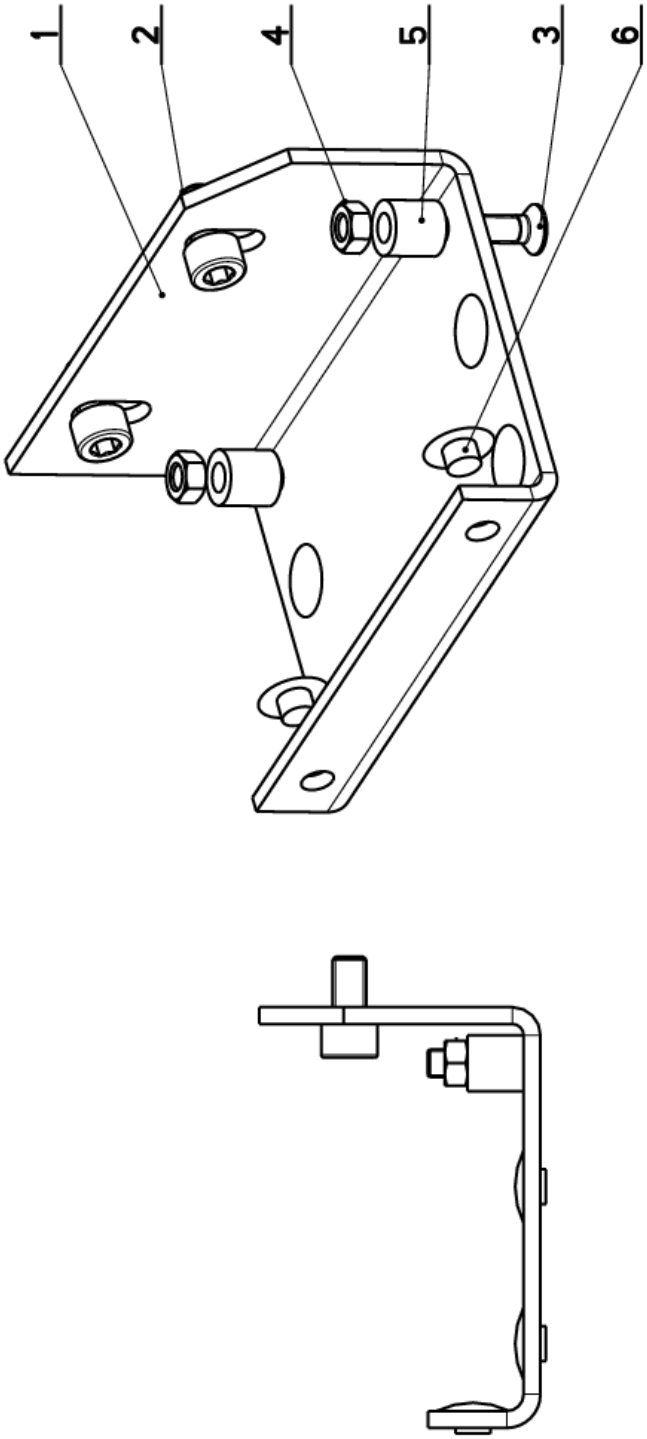

7.34. Vedení pásu / Belt guide / Sägebandführung

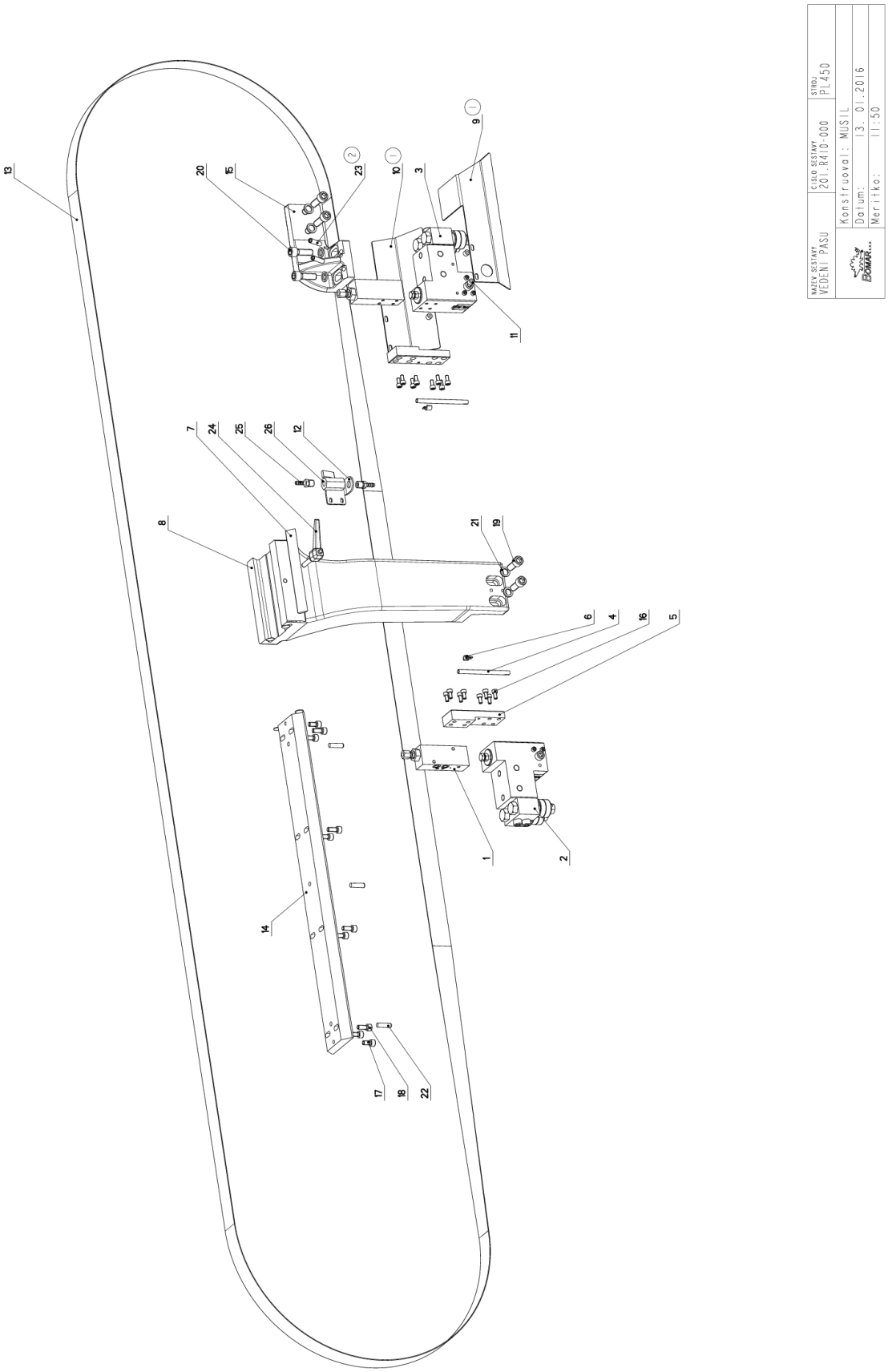

7.35. Kusovník / Piece list / Stückliste - Vedení pásu / Belt guide / Sägebandführung

Cislo Sestavy	Ver.	Nazev sestavy
201.R410-000	2	VEDENI PASU/BELT GUIDE/SÄGEBANDFÜHRUNG

Poz.	Objednaci cislo	Ver.	Nazev polozky	Rozmer	Ks
1	201.6816-100	0	KOSTKA REGULACE / REGULATION CUBE / REGELUNGSWÜRFEL		2
2	201.Y410-100	1	KOSTKA VODICI / LEAD CUBE / FÜHRUNGSKLOTZ		1
3	201.Y410-200	1	KOSTKA VODICI / LEAD CUBE / FÜHRUNGSKLOTZ		1
4	30.3510-004	0	TRUBKA / TUBE / ROHR	TR 8x 1	2
5	30.6016-002	0	DESKA / BOARD / PLATTE	HR 40x20	2
6	30.9010-003	0	DRZAK / HOLDER / HALTER	P1.5x10	2
7	30.M410-008	0	LISTA / TRIM / LEISTE	HR 20x6	1
8	30.R410-004	1	KONZOLA / CONSOLE / KONSOLE		1
9	30.R410-006 (1)	0	KRYT PASU / BELT COVER / BANDABDECKUNG	P 2x192	1
10	30.R410-007 (1)	0	KRYT PASU / BELT COVER / BANDABDECKUNG	P 2x108	1
11	30.Y310-007	0	KROUZEK / RING / RING	TR 10x2,5	4
12	30.Y310-008	1	DRZAK / HOLDER / HALTER	P 3x50	1
13	30.Y404-006	0	PAS PILOVY / SAW BELT / SÄGEBAND	41x1,3	1
14	30.Y410-003	0	LISTA VODICI / LEAD TRIM / FÜHRUNGSLEISTE	HR 90x20	1
15	30.Y410-105	3	DRZAK / HOLDER / HALTER		1
16	90.001.25.016	0	SROUB IMBUS / ALLEN HEAD BOLT / IMBUSSCHRAUBE	M6X12	16
17	90.001.25.031	0	SROUB IMBUS / ALLEN HEAD BOLT / IMBUSSCHRAUBE	8x16	2
18	90.001.25.032	0	SROUB IMBUS / ALLEN HEAD BOLT / IMBUSSCHRAUBE	8x20	8
19	90.001.25.058	0	SROUB IMBUS / ALLEN HEAD BOLT / IMBUSSCHRAUBE	M12X30	2
20	90.001.25.059	0	SROUB IMBUS / ALLEN HEAD BOLT / IMBUSSCHRAUBE	M12X35	4
21	90.163.00.003	0	PODLOZKA / WASHER / UNTERLEGSCHEIBE	NORD-LOCK	6
22	90.302.0Z.002	0	KUZEL. KOLIK S ZAV. / TAPER PIN + THREAD / KEGELBOLZEN + GEWINDE	KOLIK 8X30	3
23	90.302.0Z.003 (2)	0	KUZEL. KOLIK S ZAV. / TAPER PIN + THREAD / KEGELBOLZEN + GEWINDE	KOLIK 8X36	2
24	94.008.003	0	PAKA UPINACI / ATTACHMENT LEVER / SPANNHEBEL	M8x40	1
25	94.202.002	0	REDUKCE / REDUCTION / ADAPTOR / REDUKTION	REDUKCE 6/R1/4"	2
26	99.260.003	0	VENTIL / VALVE / VENTIL	1/4"	1

1.ZRUS.KRYT PASU 30.Y410-006 A NAHR.30.R410-006,PRIDAN KRYT PASU 30.R410-007. 090/ZM110 16.5.2014 SLEZACKOVA
2.PRIDAN 2xKOLIK 8x36(90.302.0Z.003. 004/ZM009 12.1.2016 SLEZACKOVA

Cislo Sestavy/Number of assembly/Nummer der Baugruppe; Verze (Ver.)/Version/Version; Nazev sestavy/Assembly title/Name der Baugruppe; Pozice (Poz.)/Position/Position; Objednaci cislo/Purchase order number/Bestellnummer; Nazev polozky/Volume title/Name der Position; Rozmer/Stock size/Abmessung

7.36. Kostka regulace / Regulation cube / Regelungswürfel

Cislo Sestavy 201.6816-100

Ver. 0

Nazev sestavy KOSTKA REGULACE/REGULATION CUBE/REGELUNGSWÜRFEL

Poz.	Objednaci cislo	Ver.	Nazev polozky	Rozmer	Ks
1	30.6816-101	1	KOSTKA REGULACE / REGULATION CUBE / REGELUNGSWÜRFEL	TYC 40x40	1
2	30.6816-104	2	VIKO / COVER / DECKEL	TYC 16	1
3	30.6816-103	0	PIST / PISTON / KOLBEN	TYC 12	1
4	30.6816-108	1	JEHLA / NEEDLE / NADEL	TYC 8	1
5	95.690.001	0	JEHLA / NEEDLE / NADEL	1.5x11.8	1
6	30.6816-106	3	PIST / PISTON / KOLBEN	TYC 12	1
7	30.6816-107	0	VIKO / COVER / DECKEL	TYC 22	1
8	92.002.102	0	SROUBENI / BOLTING / VERSCHRAUBUNG	S-GEV-8LLR	1
9	96.002.003	0	KROUZEK O DYNAMICKY / DYNAMIC O RING / O-RING DYNAMISCH	6X2	1
10	96.002.041	0	KROUZEK O DYNAMICKY / DYNAMIC O RING / O-RING DYNAMISCH	10x1	1
11	96.001.001	0	KROUZEK O STATICKY / STATIC O RING / O-RING STATISCH	4X1,8	2
12	96.001.003	0	KROUZEK O STATICKY / STATIC O RING / O-RING STATISCH	8X2	1

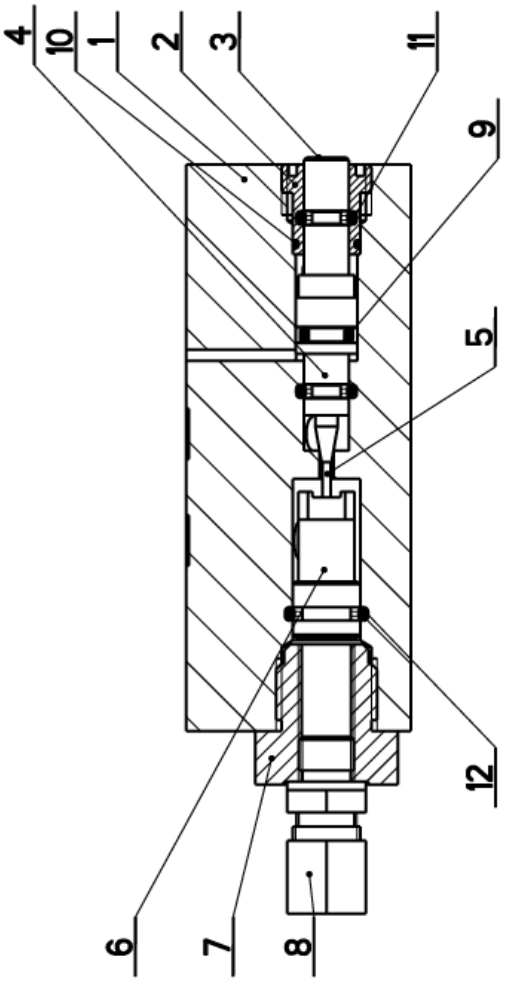

7.37. Kostka vodící / Lead cube / Führungsklotz

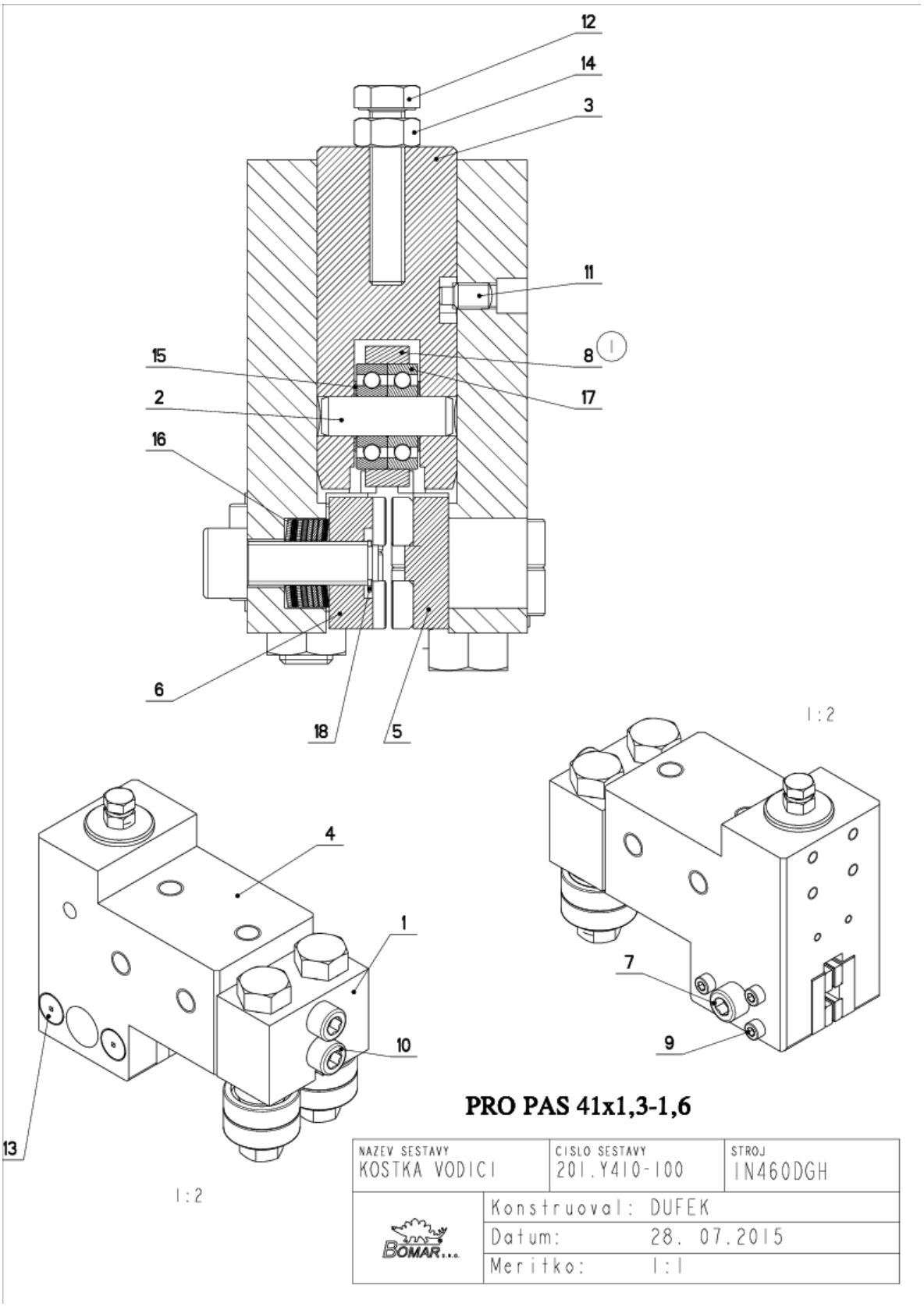

7.38. Kusovník / Piece list / Stückliste - Kostka vodící / Lead cube / Führungsklotz

Cislo Sestavy	Ver.	Nazev sestavy
201.Y410-100	1	KOSTKA VODICI/LEAD CUBE/FÜHRUNGSKLOTZ

Poz.	Objednaci cislo	Ver.	Nazev polozky	Rozmer	Ks
1	201.6110-510	0	VEDENI / GUIDE / BACKENFÜHRUNG		1
2	30.6710-108	1	KOLIK / PIN / BOLZEN	TYC 10	1
3	30.6710-109	0	PIST / PISTON / KOLBEN	d 32	1
4	30.Y410-101	1	KOSTKA VODICI / LEAD CUBE / FÜHRUNGSKLOTZ	HR 110x70	1
5	30.Y410-110	0	DRZAK TVRDOKOVU / POA HOLDER / HM-HALTER		1
6	30.Y410-120	0	DRZAK TVRDOKOVU / POA HOLDER / HM-HALTER		1
7	30.Y610-503	0	SROUB IMBUS / ALLEN HEAD BOLT / IMBUSSCHRAUBE	M10X30	1
8	31.6710-110 (1)	1	KROUZEK / RING / RING	LH 2403210	1
9	90.001.25.011	0	SROUB IMBUS / ALLEN HEAD BOLT / IMBUSSCHRAUBE	M5X25	3
10	90.001.25.054	0	SROUB IMBUS / ALLEN HEAD BOLT / IMBUSSCHRAUBE	M10X60	2
11	90.004.20.002	0	SROUB STAVECI / ADJUSTMENT BOLT / STELLSCHRAUBE	SROUB M6X12	1
12	90.005.55.019	0	SROUB 6HRANNY / 6 SIDED BOLT / SECHSKANTSCHRAUBE	SROUB M8X40	1
13	90.011.27.016	0	ZAPUSTNY IMBUS / COUNTERSINK BOLT / SENKSCHRAUBE	SROUB M8X25	2
14	90.100.55.005	0	MATICE / NUT / MUTTER	MATICE _ M8	1
15	90.154.50.003	0	PODLOZKA / WASHER / UNTERLEGSCHEIBE	10x16x0.50	2
16	90.350.02.005	0	PRUZINA TALIROVA / DISC SPRING / TELLERFEDER	20X10.2X1	8
17	95.001.044	0	LOZISKO / BEARING / LAGER	609 2RS	2
18	95.800.002	0	SEGR HRIDEL. / OUTSIDE SAFETY RING / SICHERUNGSRING AUSSEN	POJISTNY KROUZEK 8	1

1.ZRUS.SOUC.30.6710-110 A NAHR.31.6710-110. 175/ZM178 28.7.2015 SLEZACKOVA

Cislo Sestavy/Number of assembly/Nummer der Baugruppe; Verze (Ver.)/Version/Version; Nazev sestavy/Assembly title/Name der Baugruppe; Pozice (Poz.)/Position/Position;
Objednaci cislo/Purchase order number/Bestellnummer; Nazev polozky/Volume title/Name der Position; Rozmer/Stock size/Abmessung

7.39. Vedení / Guide / Backenführung

Cislo Sestavy	Ver.	Nazev sestavy
201.6110-510	0	VEDENI/GUIDE/BACKENFÜHRUNG

Poz.	Objednaci cislo	Ver.	Nazev polozky	Rozmer	Ks
1	30.6010-104	1	EXCENTR / CAM / EXZENTER	SK 22	2
2	30.6010-108	0	KROUZEK DISTANCNI / DISTANCE RING / DISTANZRING	Tr 25x5	1
3	30.6110-502	0	KOSTKA VODICI / LEAD CUBE / FÜHRUNGSKLOTZ	HR 80x50	1
4	90.100.55.007	0	MATICE / NUT / MUTTER	MATICE - M12	2
5	90.150.50.008	0	PODLOZKA / WASHER / UNTERLEGSCHEIBE	PODLOZKA 15	3
6	95.001.015	0	LOZISKO / BEARING / LAGER	6202 2RS	4

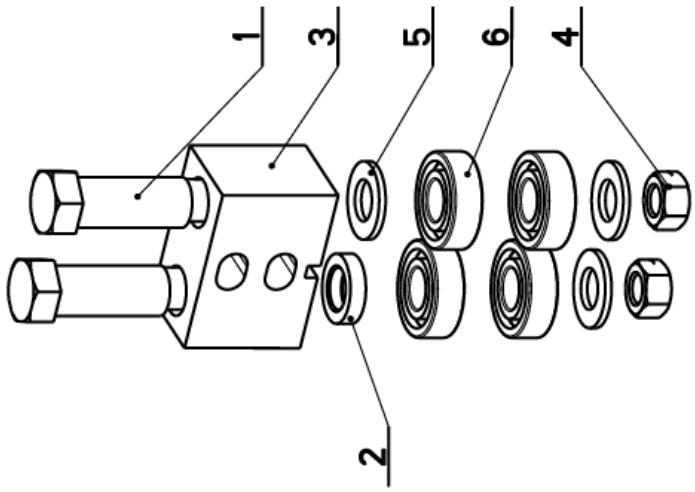

7.40. Kostka vodící / Lead cube / Führungsklotz

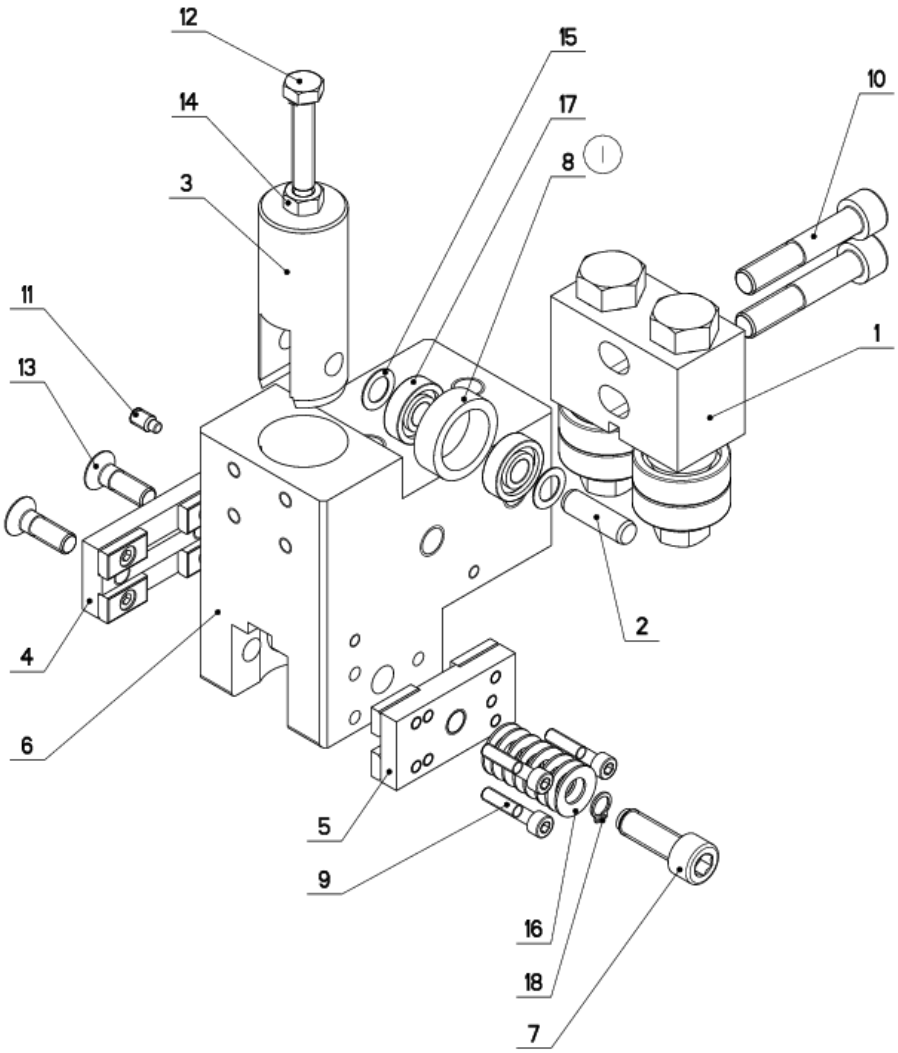

NAZEV SESTAVY	CISLO SESTAVY	STROJ
KOSTKA VODICI	201.Y410-200	IN460DGH
BOMAR	Konstruoval: MUSIL	
	Datum: 28. 07.2015	
	Meritko: 1:2	

7.41. Kusovník / Piece list / Stückliste - Kostka vodící / Lead cube / Führungsklotz

Cislo Sestavy	Ver.	Nazev sestavy
201.Y410-200	1	KOSTKA VODICI/LEAD CUBE/FÜHRUNGSKLOTZ

Poz.	Objednaci cislo	Ver.	Nazev polozky	Rozmer	Ks
1	201.6110-510	0	VEDENI / GUIDE / BACKENFÜHRUNG		1
2	30.6710-108	1	KOLIK / PIN / BOLZEN	TYC 10	1
3	30.6710-109	0	PIST / PISTON / KOLBEN	d 32	1
4	30.Y410-110	0	DRZAK TVRDOKOVU / POA HOLDER / HM-HALTER		1
5	30.Y410-120	0	DRZAK TVRDOKOVU / POA HOLDER / HM-HALTER		1
6	30.Y410-201	1	KOSTKA VODICI LEVA / LEAD CUBE / FÜHRUNGSKLOTZ	HR 110x70	1
7	30.Y610-503	0	SROUB IMBUS / ALLEN HEAD BOLT / IMBUSSCHRAUBE	M10X30	1
8	31.6710-110 (1)	1	KROUZEK / RING / RING	LH 2403210	1
9	90.001.25.011	0	SROUB IMBUS / ALLEN HEAD BOLT / IMBUSSCHRAUBE	M5X25	3
10	90.001.25.053	0	SROUB IMBUS / ALLEN HEAD BOLT / IMBUSSCHRAUBE	M10X55	2
11	90.004.2D.002	0	SROUB STAVECI / ADJUSTMENT BOLT / STELLSCHRAUBE	SROUB M6X12	1
12	90.005.55.019	0	SROUB 6HRANNY / 6 SIDED BOLT / SECHSKANTSCHRAUBE	SROUB M8X40	1
13	90.011.27.016	0	ZAPUSTNY IMBUS / COUNTERSINK BOLT / SENKSCHRAUBE	SROUB M8X25	2
14	90.100.55.005	0	MATICE / NUT / MUTTER	MATICE _ M8	1
15	90.154.50.003	0	PODLOZKA / WASHER / UNTERLEGSCHEIBE	10x16x0.50	2
16	90.350.0Z.005	0	PRUZINA TALIROVA / DISC SPRING / TELLERFEDER	20X10.2X1	8
17	95.001.044	0	LOZISKO / BEARING / LAGER	609 2RS	2
18	95.800.002	0	SEGR HRIDEL. / OUTSIDE SAFETY RING / SICHERUNGSRING AUSSEN	POJISTNY KROUZEK 8	1

1.ZRUS.SOUC.30.6710-110 A NAHR.31.6710-110. 175/ZM178 28.7.2015 SLEZACKOVA

Cislo Sestavy/Number of assembly/Nummer der Baugruppe; Verze (Ver.)/Version/Version; Nazev sestavy/Assembly title/Name der Baugruppe; Pozice (Poz.)/Position/Position;
Objednaci cislo/Purchase order number/Bestellnummer; Nazev polozky/Volume title/Name der Position; Rozmer/Stock size/Abmessung

7.42. Vedení / Guide / Backenführung

Cislo Sestavy	Ver.	Nazev sestavy
201.6110-510	0	VEDENI/GUIDE/BACKENFÜHRUNG

Poz.	Objednaci cislo	Ver.	Nazev polozky	Rozmer	Ks
1	30.6010-104	1	EXCENTR / CAM / EXZENTER	SK 22	2
2	30.6010-108	0	KROUZEK DISTANCNI / DISTANCE RING / DISTANZRING	Tr 25x5	1
3	30.6110-502	0	KOSTKA VODICI / LEAD CUBE / FÜHRUNGSKLOTZ	HR 80x50	1
4	90.100.55.007	0	MATICE / NUT / MUTTER	MATICE - M12	2
5	90.150.50.008	0	PODLOZKA / WASHER / UNTERLEGSCHEIBE	PODLOZKA 15	3
6	95.001.015	0	LOZISKO / BEARING / LAGER	6202 2RS	4

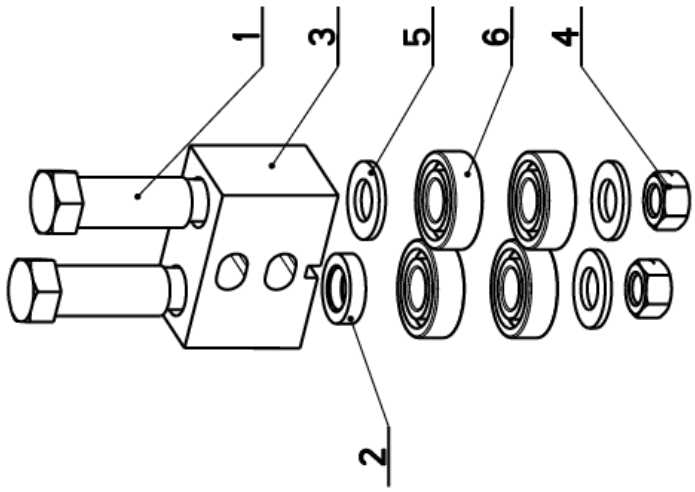

7.43. Pohon / Drive / Antrieb

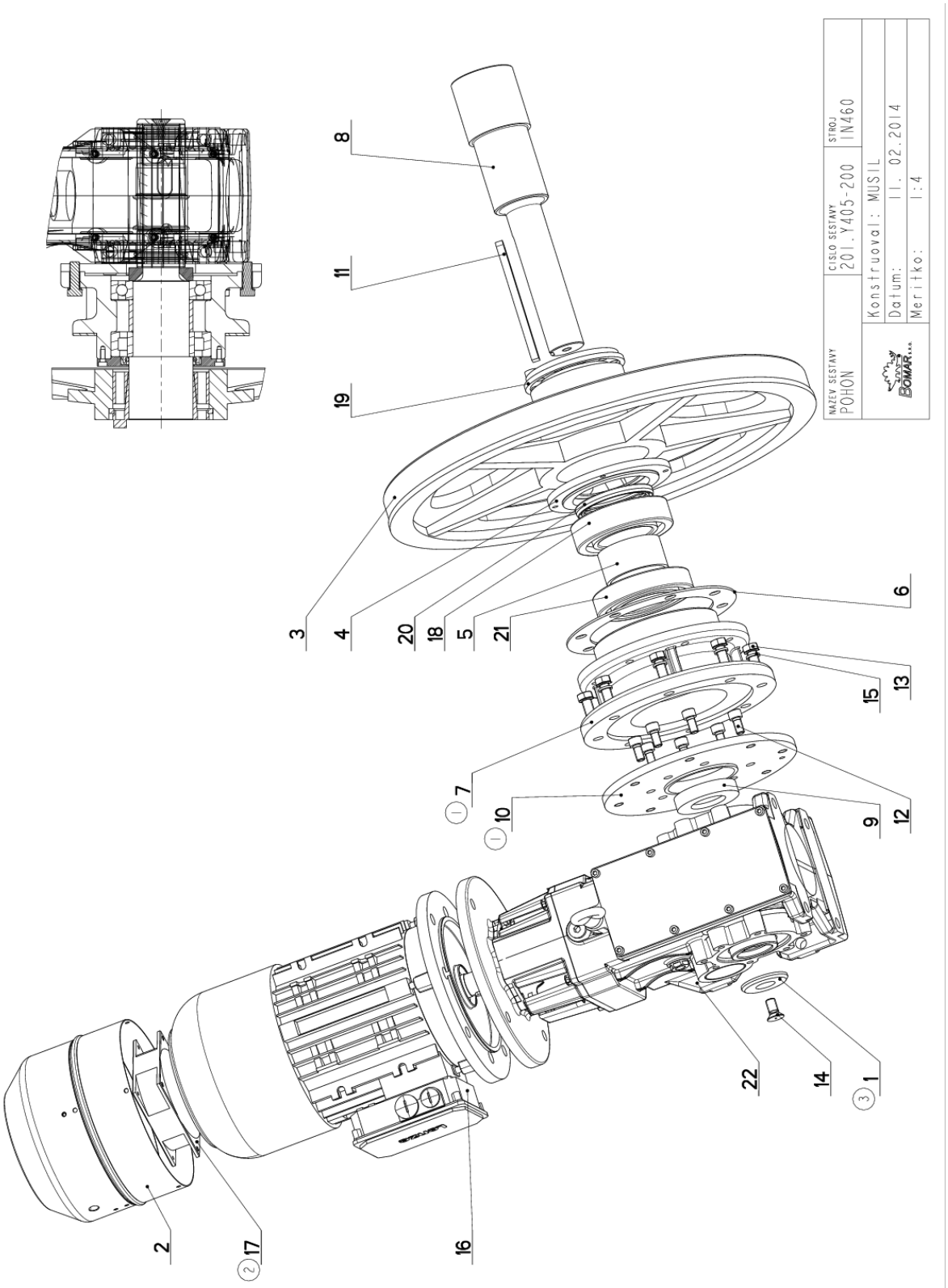

7.44. Kusovník / Piece list / Stückliste - Pohon / Drive / Antrieb

Cislo Sestavy	Ver.	Nazev sestavy
201.Y405-200	3	POHON/DRIVE /ANTRIEB

Poz.	Objednaci cislo	Ver.	Nazev polozky	Rozmer	Ks
1	30.0804-009 (3)	2	PODLOZKA / WASHER / UNTERLEGSCHEIBE	d 60	1
2	30.4304-018	4	VENTILATOR / VENTILATOR / VENTILATOR		1
3	30.6005-001	4	KOLO HNACI / DRIVE WHEEL / ANTRIEBSRAD	ODLITEK	1
4	30.6105-604	1	VIKO / COVER / DECKEL	P 12x159	1
5	30.6105-605	0	KROUZEK DISTANCNI / DISTANCE RING / DISTANZRING	TR 80x5	1
6	30.6105-607	0	KROUZEK DISTANCNI / DISTANCE RING / DISTANZRING	P 4x220	1
7	30.R405-505 (1)	0	PRIRUBA / FLANGE / FLANSCHE	ODLITEK	1
8	30.Y405-202	0	HRIDEL / SHAFT / WELLE	d 90	1
9	30.Y405-203	0	KROUZEK DISTANCNI / DISTANCE RING / DISTANZRING	d 80	1
10	30.Y405-205 (1)	0	PRIRUBA / FLANGE / FLANSCHE	P15x250	1
11	30.Y605-002	0	PERO / SPRING / FEDER	HR.14x9	1
12	90.001.25.046	0	SROUB IMBUS / ALLEN HEAD BOLT / IMBUSSCHRAUBE	M10X20	7
13	90.005.55.033	0	SROUB 6HRANNY / 6 SIDED BOLT / SECHSKANTSCHRAUBE	SROUB M12X35	8
14	90.011.27.025	0	ZAPUSTNY IMBUS / COUNTERSINK BOLT / SENKSCHRAUBE	SROUB M12X25	1
15	90.158.50.009	0	PODLOZKA PRUZNA / SPRING WASHER / FEDERSCHEIBE	PODLOZKA 12	8
16	91.001.117	0	ELEKTROMOTOR / ELECTRIC MOTOR / ELEKTROMOTOR	4kW 4P B5 112	1
17	91.015.126 (2)	0	VENTILATOR / VENTILATOR / VENTILATOR	VENTILATOR RDH1238,B2	1
18	95.201.007	0	LOZISKO / BEARING / LAGER	VALECKOVA L. IRADA	1
19	95.825.001	0	POUZDRO UPINACI / FIXING SLEEVE / SPANNHÜLSE	KTR210- 80x120	1
20	95.830.052	0	GUFERO / GIT SEAL / DICHTUNG	GUFERO 80X100X10	1
21	95.001.XXX	0	KUL. LOZ. I RADE / /	6214A	1
22	99.003.020	0	PREVODOVKA KUZELOCEL / CONICAL TRANSMISSION / KEGELRADGETRIEBE	MBH80C PAM112	1

1.ZRUS.PRIRUBA 30.6105-608,30.Y405-201 A NAHR.30.R405-505,30.Y405-205. 025/ZM029 8.2.2012 SLEZACKOVA
2.ZRUS.VENTILATOR 91.015.100 A NAHR.91.015.126. 074/ZM018 11.2.2014 SLEZACKOVA
3.ZRUS.PODLOZKA 30.1804-010 A NAHR.30.0804-009. 100/ZM123 30.5.2014 SLEZACKOVA

Cislo Sestavy/Number of assembly/Nummer der Baugruppe; Verze (Ver.)/Version/Version; Nazev sestavy/Assembly title/Name der Baugruppe; Pozice (Poz.)/Position/Position; Objednaci cislo/Purchase order number/Bestellnummer; Nazev polozky/Volume title/Name der Position; Rozmer/Stock size/Abmessung

7.45. Napínání / Tensioning / Spannung

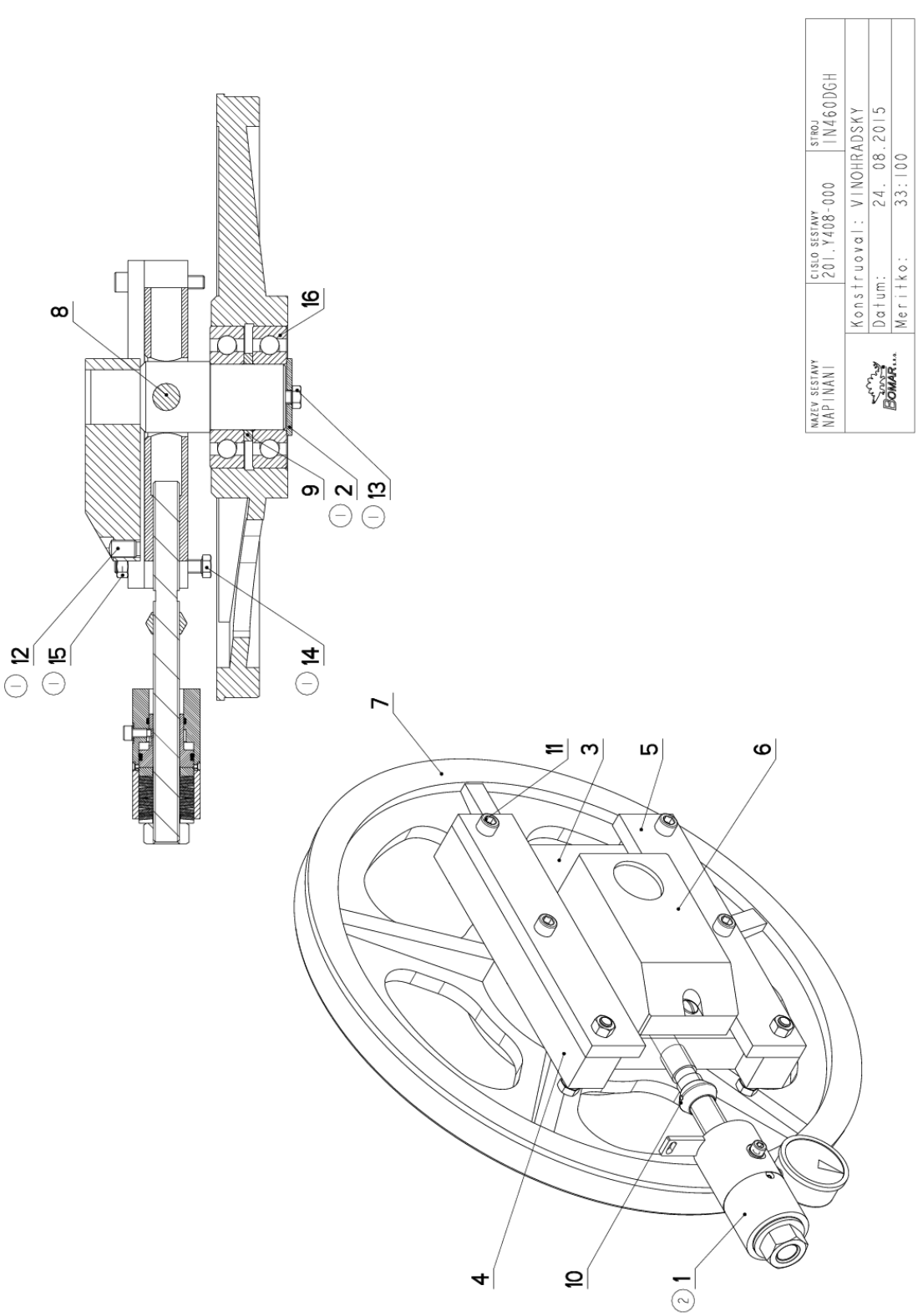

7.46. Kusovník / Piece list / Stückliste - Napínání / Tensioning / Spannung

Cislo Sestavy	Ver.	Nazev sestavy
201.Y408-000	2	NAPINANI/TENSIONING/SPANNUNG

Poz.	Objednaci cislo	Ver.	Nazev polozky	Rozmer	Ks
1	201.6107-360 (2)	0	VALEC / ROLLER / ZYLINDER	SESTAVA	1
2	30.1804-014 (1)	0	PODLOZKA / WASHER / UNTERLEGSCHEIBE	P 5x70	1
3	30.6008-001	1	KOSTKA NAPINANI / TENSIONING CUBE / BANDSPANNUNGSWÜRFEL	HR 160x40	1
4	30.6008-002	0	LISTA VODICI / LEAD TRIM / FÜHRUNGSLEISTE	HR 40x40	2
5	30.6008-003	0	LISTA VODICI / LEAD TRIM / FÜHRUNGSLEISTE	HR 60x15	2
6	30.6008-004	2	NAPINANI / TENSIONING / SPANNUNG		1
7	30.6008-006	6	KOLO NAPINACI / TENSIONING WHEEL / UMLENKRAD		1
8	30.6008-014	1	CEP NAPINANI / TENSIONING LUG / SPANNUNGSBOLZEN	d 25 h6	1
9	30.6708-002	1	KROUZEK DISTANCNI / DISTANCE RING / DISTANZRING	TRUBKA 82.5x12.5	1
10	30.7208-006	0	DORAZ / STOP PIECE / ANSCHLAG	TYC 38	1
11	90.001.25.064	0	SROUB IMBUS / ALLEN HEAD BOLT / IMBUSSCHRAUBE	M12X70	5
12	90.002.2D.028 (1)	0	SROUB STAVECI / ADJUSTMENT BOLT / STELLSCHRAUBE	SROUB M16x1,5x25	1
13	90.005.55.030 (1)	0	SROUB 6HRANNY / 6 SIDED BOLT / SECHSKANTSCHRAUBE	SROUB M12X20	1
14	90.005.55.036 (1)	0	SROUB 6HRANNY / 6 SIDED BOLT / SECHSKANTSCHRAUBE	SROUB M12X80	2
15	90.100.55.007 (1)	0	MATICE / NUT / MUTTER	MATICE _ M12	2
16	95.001.041	0	LOZISKO / BEARING / LAGER	6312A	2

1.ZRUS.2xSROUB IMBUS M12x70(90.0001.25.064) A NAHR.2xSROUB 6HR M12x80(90.005.55.036),PRID.2xMATICE M12(90.100.55.007), 1xSTAVECI SROUB M16x25(90.002.2D.028),ZRUS.PODLOZKA 30.1804-010 A NAHR.30.1804-014,ZRUS.SROUB ZAPUSTNY M12x20 (90.011.27.009) A NAHR.SROUB 6HR M12x20(90.005.55.030 164/ZM187 24.8.2015 SLEZACKOVA
2.ZRUS. VALEC 201.6107-350 A NAHR. VALCEM 201.6107-360. 083/ZM137 31.3.2017 VLACH

Cislo Sestavy/Number of assembly/Nummer der Baugruppe; Verze (Ver.)/Version/Version; Nazev sestavy/Assembly title/Name der Baugruppe; Pozice (Poz.)/Position/Position; Objednaci cislo/Purchase order number/Bestellnummer; Nazev polozky/Volume title/Name der Position; Rozmer/Stock size/Abmessung

7.47. Válec / Roller / Zylinder

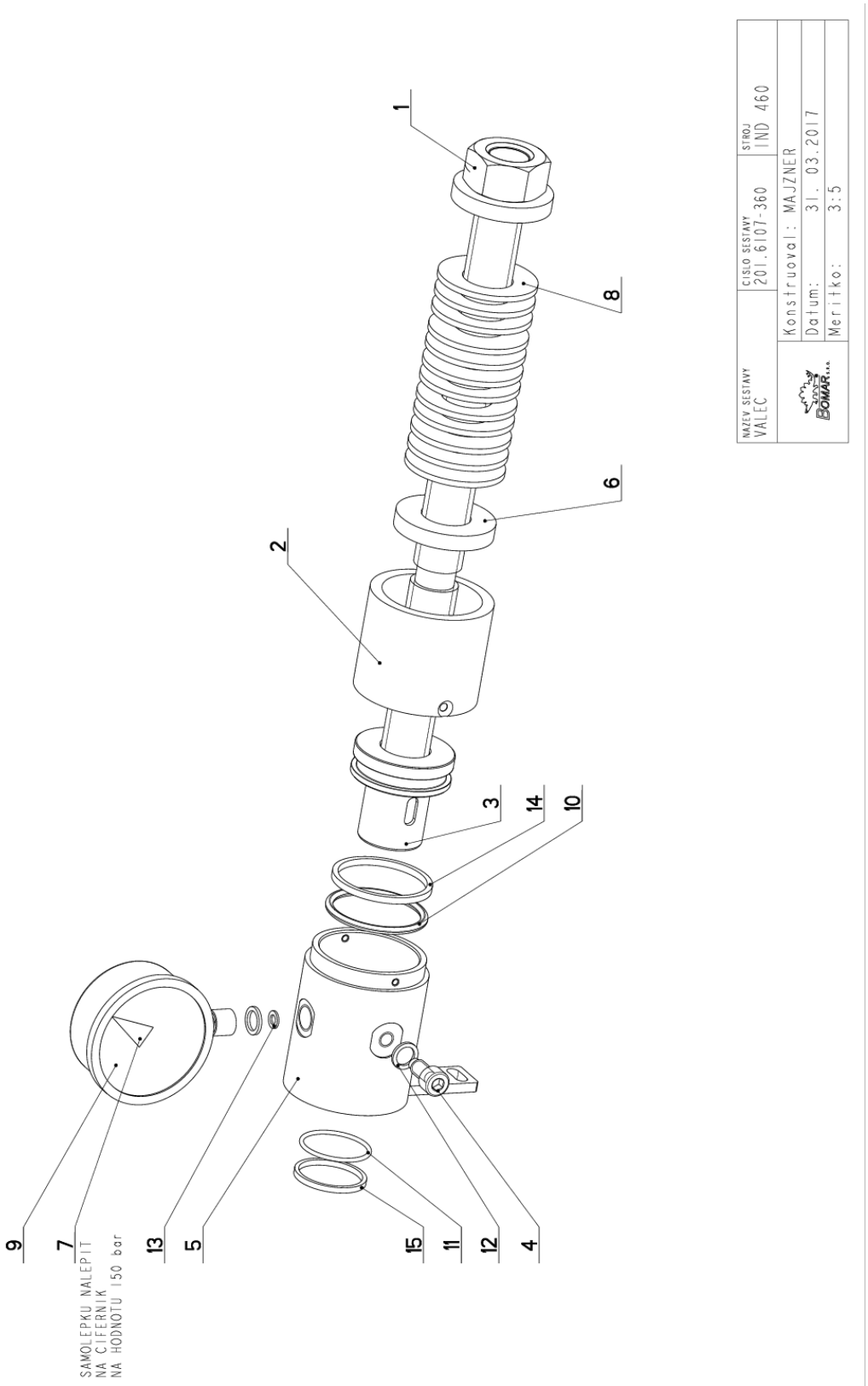

7.48. Kusovník / Piece list / Stückliste - Válec / Roller / Zylinder

Cislo Sestavy	Ver.	Nazev sestavy
201.6107-360	0	VALEC/ROLLER/ZYLINDER

Poz.	Objednaci cislo	Ver.	Nazev polozky	Rozmer	Ks
1	201.6108-020	0	SROUB / BOLT / SCHRAUBE		1
2	30.6008-013	0	TRUBKA / TUBE / ROHR	TR 62x10	1
3	30.6107-352	0	PIST / PISTON / KOLBEN	d 55	1
4	30.6107-354	1	SROUB / BOLT / SCHRAUBE	M8X20	1
5	30.6107-358	0	VALEC / ROLLER / ZYLINDER		1
6	30.6107-359	1	DISTANC / DISTANCE / DISTANZ	P 8x50	1
7	31.0899-004	0	SAMOLEPKA / STICKER / AUFKLEBER		1
8	90.350.0Z.004	0	TAL.PRUZINA DIN 2093 A / DISC SPRING / TELLERFEDER	50X25.4X3	12
9	92.080.004	0	MANOMETR / MANOMETER / MANOMETER	d 63 - 250bar	1
10	96.001.033	0	KROUZEK O STATICKY / STATIC O RING / O-RING STATISCH	ORAR00224-N70	1
11	96.002.063	0	KROUZEK O STATICKY / STATIC O RING / O-RING STATISCH	ORAR00125-N70	1
12	96.082.001	0	KROUZEK TESNICI / SEAL RING / DICHTUNGSRING	10/14x1.5 CU	2
13	96.082.005	0	KROUZEK TESNICI / SEAL RING / DICHTUNGSRING	5x8.8x1	1
14	96.083.010	0	KROUZEK / RING / RING	BG2700446-PT00	1
15	96.083.011	0	KROUZEK / RING / RING	BU2000320-PT00	1

Cislo Sestavy/Number of assembly/Nummer der Baugruppe; Verze (Ver.)/Version/Version; Nazev sestavy/Assembly title/Name der Baugruppe; Pozice (Poz.)/Position/Position; Objednaci cislo/Purchase order number/Bestellnummer; Nazev polozky/Volume title/Name der Position; Rozmer/Stock size/Abmessung

7.49. Volitelné příslušenství

7.49.1. Horní upínání/ Top clamping/ obere Klemm

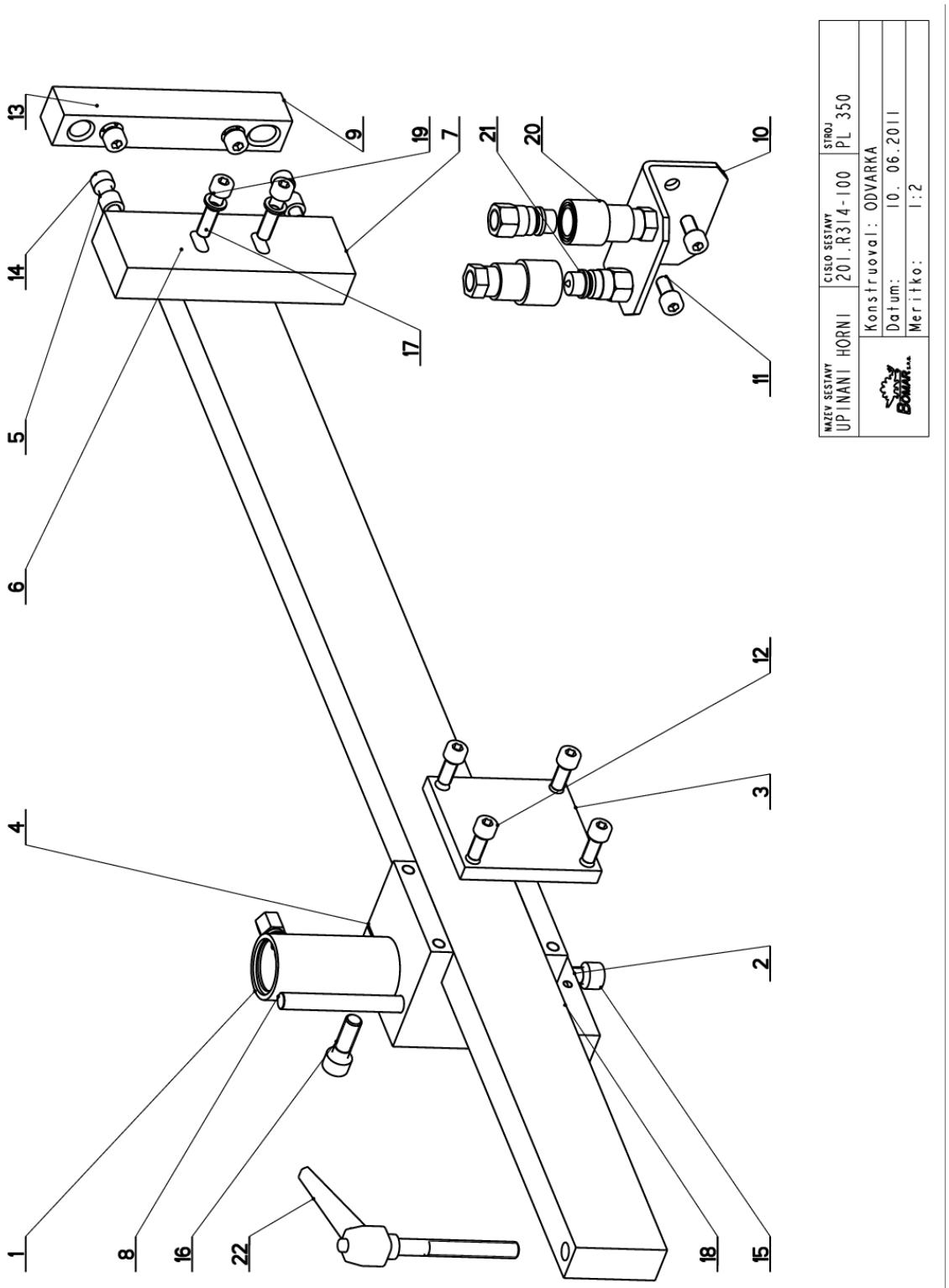

7.49.2. Kusovník / Piece list / Stückliste -
Horní upínání/ Top clamping/ obere Klemm

Cislo Sestavy	Ver.	Nazev sestavy
201.R314-100	0	UPINANI HORNI/TOP CLAM/SPANNVORRICHTUNG OBEN

Poz.	Objednaci cislo	Ver.	Nazev polozky	Rozmer	Ks
1	201.R307-500	0	VALEC POMOCNY / AUXILIARY CYLINDER / HILFSZYLINDER		1
2	30.R214-103	0	DESKA / BOARD / PLATTE	HR 40x15	1
3	30.R214-104	0	DESKA / BOARD / PLATTE	HR 80x10	1
4	30.R214-105	0	KOSTKA / CUBE / WÜRFEL	HR 80x80	1
5	30.R214-107	0	KROUZEK DISTANCNI / LUG / BOLZEN	d 13	2
6	30.R314-101	0	LISTA VODICI / LEAD TRIM / FÜHRUNGSLEISTE	HR 60x25	1
7	30.R314-102	0	DRZAK / LEAD TRIM / FÜHRUNGSLEISTE	HR 50x25	1
8	30.R314-103	0	TYC / POLE / STANGE	D10	1
9	30.R314-104	0	DESKA / LEAD TRIM / FÜHRUNGSLEISTE	HR 25x25	1
10	30.R314-108	0	PLECH / PLATE / BLECH	P 4x80	1
11	90.001.25.031	0	SROUB IMBUS / ALLEN HEAD BOLT / IMBUSSCHRAUBE	8x16	2
12	90.001.25.032	0	SROUB IMBUS / ALLEN HEAD BOLT / IMBUSSCHRAUBE	8x20	4
13	90.001.25.033	0	SROUB IMBUS / ALLEN HEAD BOLT / IMBUSSCHRAUBE	8x25	2
14	90.001.25.034	0	SROUB IMBUS / ALLEN HEAD BOLT / IMBUSSCHRAUBE	M8X30	2
15	90.001.25.045	0	SROUB IMBUS / ALLEN HEAD BOLT / IMBUSSCHRAUBE	M10X16	1
16	90.001.25.048	0	SROUB IMBUS / ALLEN HEAD BOLT / IMBUSSCHRAUBE	M10X30	1
17	90.001.55.035	0	SROUB IMBUS / ALLEN HEAD BOLT / IMBUSSCHRAUBE	M8X35	2
18	90.002.2D.008	0	SROUB STAVECI / ADJUSTMENT BOLT / STELLSCHRAUBE	SROUB M6X16	1
19	90.163.00.002	0	PODLOZKA / WASHER / UNTERLEGSCHEIBE	PODLOZKA 8	2
20	92.060.007	0	RYCHLOSPOJKA / QUICK CONNECT / SCHNELLKUPPLUNG	6 G1/4"	2
21	92.060.008	0	RYCHLOSPOJKA / QUICK CONNECT / SCHNELLKUPPLUNG	6 G1/4"	2
22	94.008.007	0	PAKA UPINACI / ATTACHMENT LEVER / SPANNHEBEL	M10	1

Cislo Sestavy/Number of assembly/Nummer der Baugruppe; Verze (Ver.)/Version/Version; Nazev sestavy/Assembly title/Name der Baugruppe; Pozice (Poz.)/Position/Position; Objednaci cislo/Purchase order number/Bestellnummer; Nazev polozky/Volume title/Name der Position; Rozmer/Stock size/Abmessung

7.49.3. Horní upínání/ Top clamping/ obere Klemm

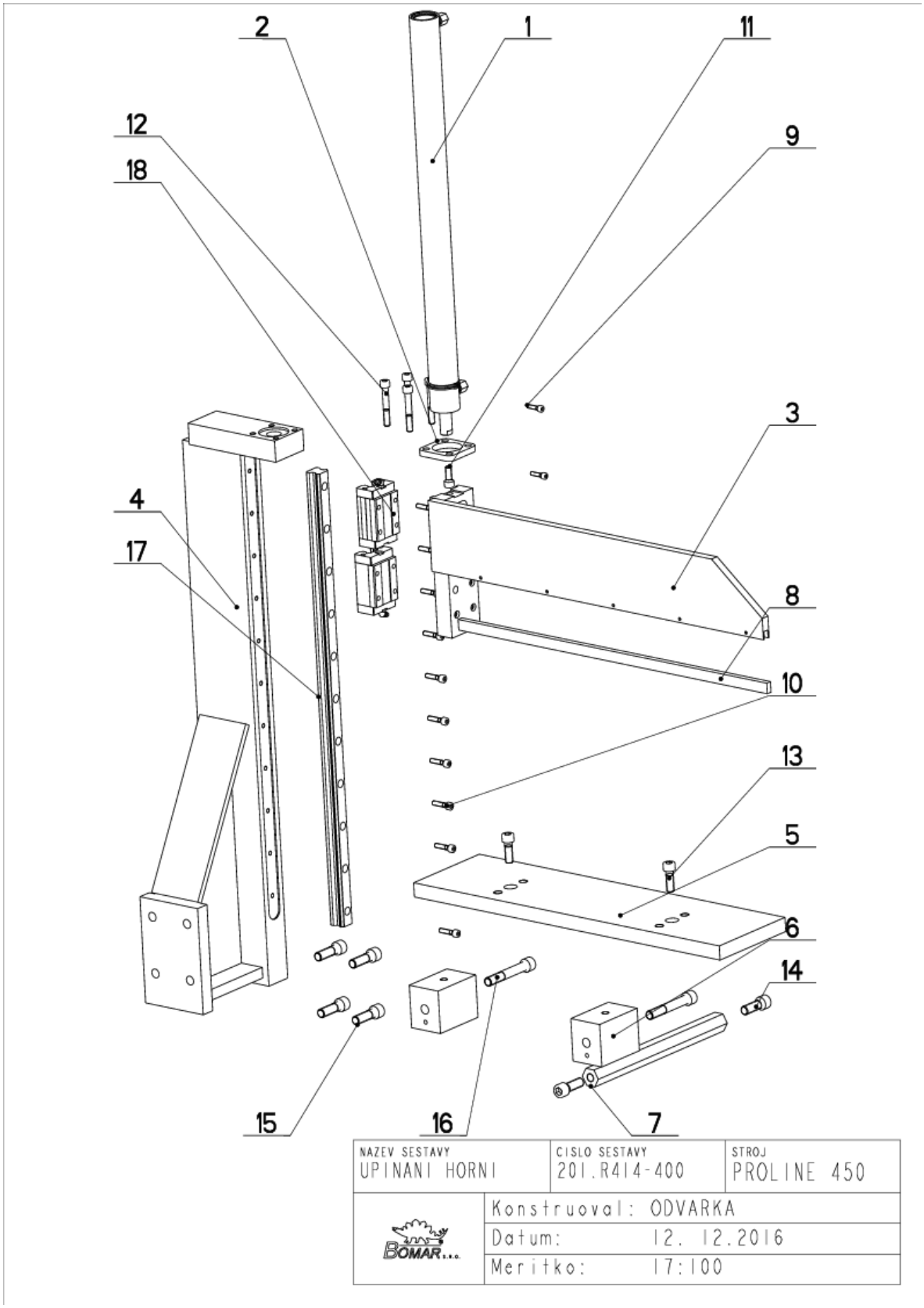

7.49.4. Kusovník / Piece list / Stückliste - Horní upínání/ Top clamping/ obere Klemm

Cislo Sestavy	Ver.	Nazev sestavy
201.R414-400	0	UPINANI HORNI/TOP CLAM/SPANNVORRICHTUNG OBEN

Poz.	Objednaci cislo	Ver.	Nazev polozky	Rozmer	Ks
1	201.D407-140	0	VALEC NAPINACI / TENSIONING CYLINDER / SPANNZYLINDER	D30/16	1
2	30.D311-126	0	DRZAK / HOLDER / HALTER	P 8x58	1
3	30.R414-401	0	CELIST / JAW / BACKE		1
4	30.R414-402	0	SLOUP / POLE / SÄULE		1
5	30.R414-403	0	DESKA / BOARD / PLATTE	HR 140x20	1
6	30.R414-404	0	DESKA / BOARD / PLATTE	HR 80x60	2
7	30.R414-405	0	DESKA / BOARD / PLATTE	6HR 24	1
8	30.R414-406	0	LISTA / TRIM / LEISTE	HR 15x8	1
9	90.001.25.010	0	SROUB IMBUS / ALLEN HEAD BOLT / IMBUSSCHRAUBE	M5X20	8
10	90.001.25.019	0	SROUB IMBUS / ALLEN HEAD BOLT / IMBUSSCHRAUBE	M6X25	11
11	90.001.25.032	0	SROUB IMBUS / ALLEN HEAD BOLT / IMBUSSCHRAUBE	8x20	1
12	90.001.25.039	0	SROUB IMBUS / ALLEN HEAD BOLT / IMBUSSCHRAUBE	M8X55	4
13	90.001.25.048	0	SROUB IMBUS / ALLEN HEAD BOLT / IMBUSSCHRAUBE	M10X30	2
14	90.001.25.059	0	SROUB IMBUS / ALLEN HEAD BOLT / IMBUSSCHRAUBE	M12X35	2
15	90.001.25.060	0	SROUB IMBUS / ALLEN HEAD BOLT / IMBUSSCHRAUBE	M12X40	4
16	90.001.25.065	0	SROUB IMBUS / ALLEN HEAD BOLT / IMBUSSCHRAUBE	M12X80	2
17	99.200.206	0	VEDENI LINEARNI / LINEAR GUIDE / LINEARE FÜHRUNG	MSA25R 640-20/20 N	1
18	99.201.066	0	VOZIK LINEARNIHO VEDENI / LINEAR GUIDE CART / LINEARFUHRUNGSWAGEN	MSA25S	2

Cislo Sestavy/Number of assembly/Nummer der Baugruppe; Verze (Ver.)/Version/Version; Nazev sestavy/Assembly title/Name der Baugruppe; Pozice (Poz.)/Position/Position; Objednaci cislo/Purchase order number/Bestellnummer; Nazev polozky/Volume title/Name der Position; Rozmer/Stock size/Abmessung

7.50. Horní upínání/ Top clamping/ obere Klemm

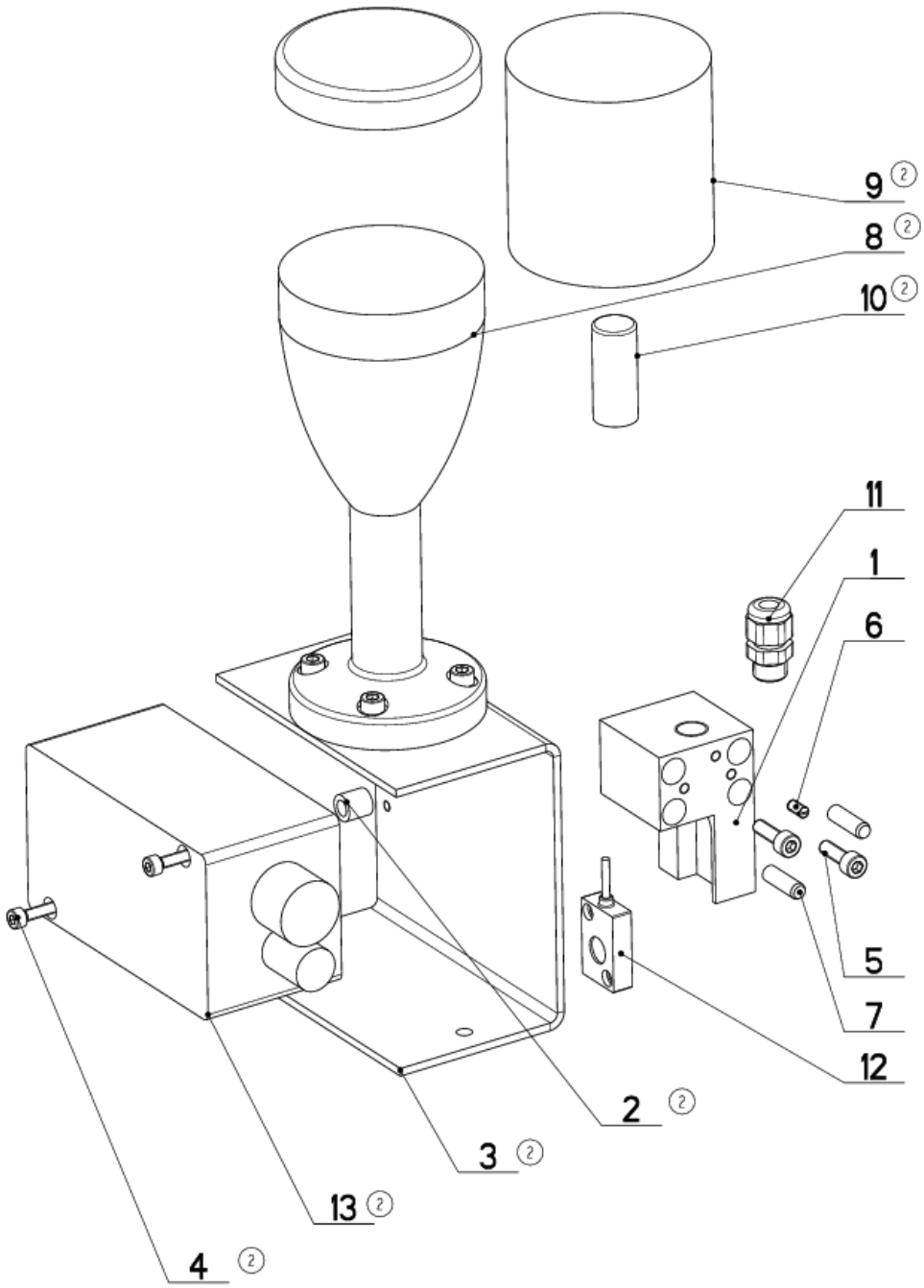

NAZEV SESTAVY	CISLO SESTAVY	STROJ
KONTROLA VYCHYLENI	2FOAPS.U6914-100	WL 280
BOMAR	Konstruoval: VINOHRADSKY	
	Datum: 26. 03.2019	
	Meritko: 1:2	

7.51. Kusovník / Piece list / Stückliste - Horní upínání/ Top clamping/ obere Klemm

Cislo Sestavy	Ver.	Nazev sestavy
202.6914-100	2	KONTROLA VYCHYLENI PASU/BELT/KONTROLLE DER SÄGEBANDAUSLENKUNG

Poz.	Objednaci cislo	Ver.	Nazev polozky	Rozmer	Ks
1	30.6914-101	2	KOSTKA / CUBE / WÜRFEL	HR40x40	1
2	30.K602-209 (2)	0	DISTANC / DISTANCE / DISTANZ	TR 10x2	2
3	30.R214-301 (2)	0	DRZAK / PLATE / BLECH	P 3x115	1
4	90.001.25.004 (2)	0	SROUB IMBUS / ALLEN HEAD BOLT / IMBUSSCHRAUBE	M4X16	2
5	90.001.25.009 (2)	0	SROUB IMBUS / ALLEN HEAD BOLT / IMBUSSCHRAUBE	M5X16	6
6	90.003.2D.011	0	SROUB STAVECI / ADJUSTMENT BOLT / STELLSCHRAUBE	SROUB M4X10	1
7	90.300.0Z.005	0	KOLIK VALC. KAL. / CYLINDRICAL PIN TEMPERED / ZYLINDERSTIFT GEHARTET	KOLIK 6X20	2
8	91.063.058	0	DRZAK / HOLDER / HALTER	SL-CB-100	1
9	91.063.059 (2)	0	SIGNALKA / SIGNAL / SIGNALLEUCHTE	SL7-L-Y	1
10	91.063.061 (2)	0	ZAROVKA / LIGHT BULB / GLUHLAMPE	SL7-L24	1
11	91.070.010	0	VYVODKA / BUSHING / TÜLLE	M12x1.5	1
12	91.172.016 (1)	0	SNIMAC / SENSOR / SENSOR	BAW.R06	1
13	91.995.084	0	JEDNOTKA RIDICI / CONTROL UNIT / STEUEREINHEIT	BDM-2	1

1.z ks.storje zrusit snimac 91.172.011 a nahradit jej snimacem 91.172.016
6.10.2008./325-2008 vinohradsky

2.ZRUS.93.017.172; PRID.30.K602-209,30.R214-301,2x90.001.25.004,4x90.001.25.009,91.063.059,91.063.061; 080/ZM129 26.3.2019 SCERBA

Cislo Sestavy/Number of assembly/Nummer der Baugruppe; Verze (Ver.)/Version/Version; Nazev sestavy/Assembly title/Name der Baugruppe; Pozice (Poz.)/Position/Position; Objednaci cislo/Purchase order number/Bestellnummer; Nazev polozky/Volume title/Name der Position; Rozmer/Stock size/Abmessung

8. Výkresy sestav pro objednání náhradních dílů/ Zeichnungen für Bestellung der Ersatzteile / Drawing assemblies for spare parts order – Proline 520.450 Hsx

Pozor!

Součásti, u kterých není zařazen výkres, jsou shodné se sestavou pily Proline 520.450 H/Hsx.

Caution!

These parts which haven´t any drawing included in this chapter are identical with parts from the assembly of the band saw Proline 520.450 H/Hsx.

Achtung!

Die Teile, bei denen es keine Zeichnung gibt, sind mit der Zusammenstellung der Säge Proline 520.450 H/Hsx - identisch.

8.1. PROLINE 520.450 Hsx

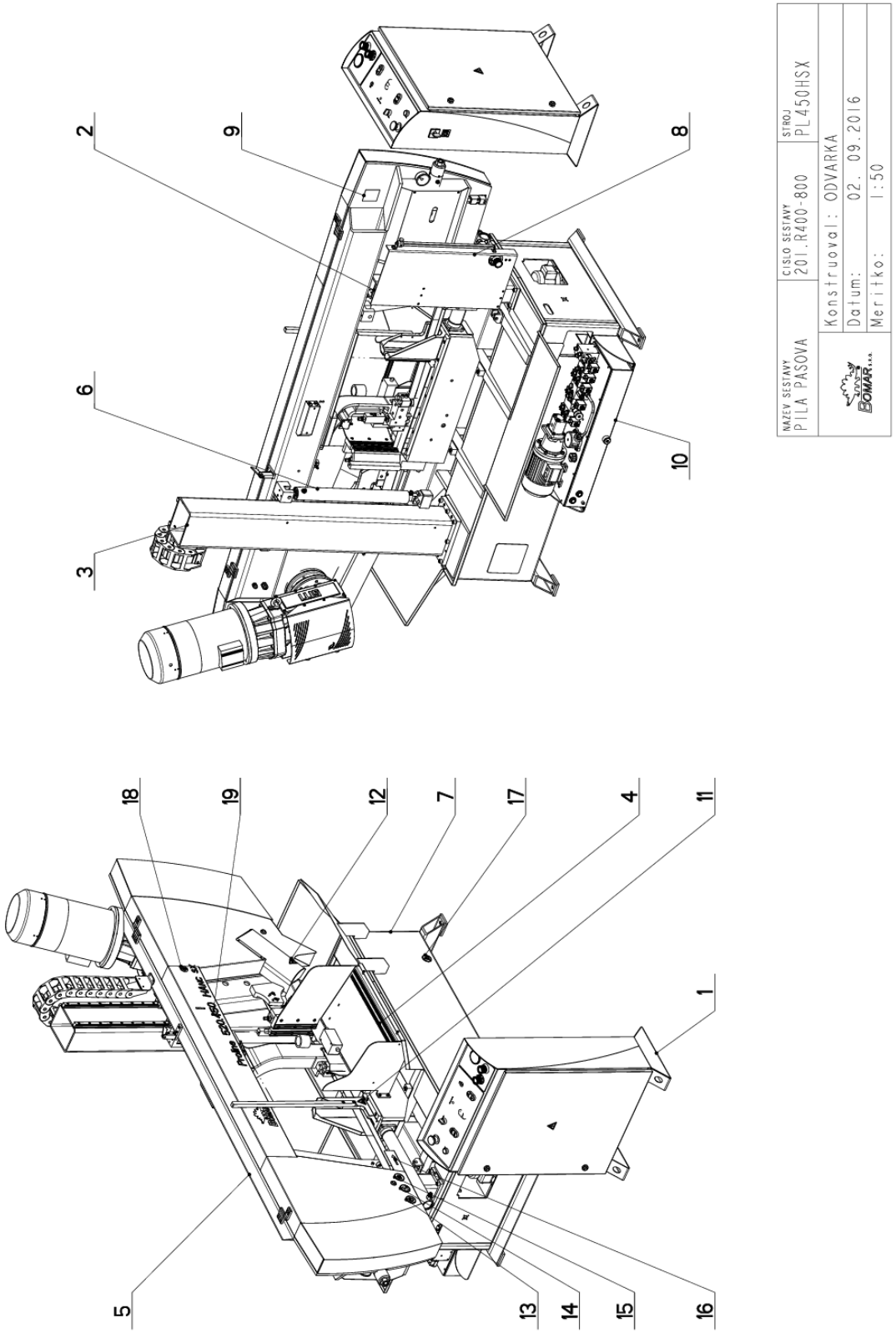

Cislo Sestavy	Ver.	Nazev sestavy
201.R400-800	0	PILA PASOVA/BAND SAW/BANDSÄGE

Poz.	Objednaci cislo	Ver.	Nazev polozky	Rozmer	Ks
1	201.R230-600	0	OVLADACI PANEL / CONTROL PANEL / BEDIENPULT		1
2	201.R402-020	1	SLOUP / POLE / SÄULE		1
3	201.R402-050	1	SLOUP / POLE / SÄULE		1
4	201.R403-000	4	SVERAK / VICE / SCHRAUBSTOCK		1
5	201.R404-800	0	RAMENO / SAW ARM / SAGERAHMEN		1
6	201.Y407-010	4	VALEC ZVEDACI / LIFTING CYLINDER / HEBEZYLINDER		1
7	221.R401-750	1	PODSTAVEC / BASE / UNTERSATZ		1
8	221.R402-730	2	ODMEROVANI / POLE / SÄULE		1
9	30.R499-801	0	STITEK TYPOVY / MACHINE LABEL / MASCHINE SCHILD	P 0.5x65	1
10	92.001.077	0	AGREGAT HYDRAULICKY / HYDRAULIC GENERATOR / HYDRAULIKAGGREGAT		1
11	99.900.039	0	SAMOLEPKA / STICKER / AUFKLEBER	NEBEZP.STLACENI	1
12	99.900.040	0	SAMOLEPKA / STICKER / AUFKLEBER		1
13	99.900.047	0	SAMOLEPKA / STICKER / AUFKLEBER		1
14	99.900.048	0	SAMOLEPKA / STICKER / AUFKLEBER		1
15	99.900.049	0	SAMOLEPKA / STICKER / AUFKLEBER		1
16	99.900.053	0	SAMOLEPKA / STICKER / AUFKLEBER		1
17	99.900.068	0	SAMOLEPKA / STICKER / AUFKLEBER	pouziti vysokozvizneno vozikku	2
18	99.901.032	0	SAMOLEPKA / STICKER / AUFKLEBER	CETIFIKACNI SAMOLEPKA	1
19	99.901.048	1	SAMOLEPKA / STICKER / AUFKLEBER		1

Cislo Sestavy/Number of assembly/Nummer der Baugruppe; Verze (Ver.)/Version/Version; Nazev sestavy/Assembly title/Name der Baugruppe; Pozice (Poz.)/Position/Position; Objednaci cislo/Purchase order number/Bestellnummer; Nazev polozky/Volume title/Name der Position; Rozmer/Stock size/Abmessung

8.3. Rameno / Saw arm / Sagerahmen

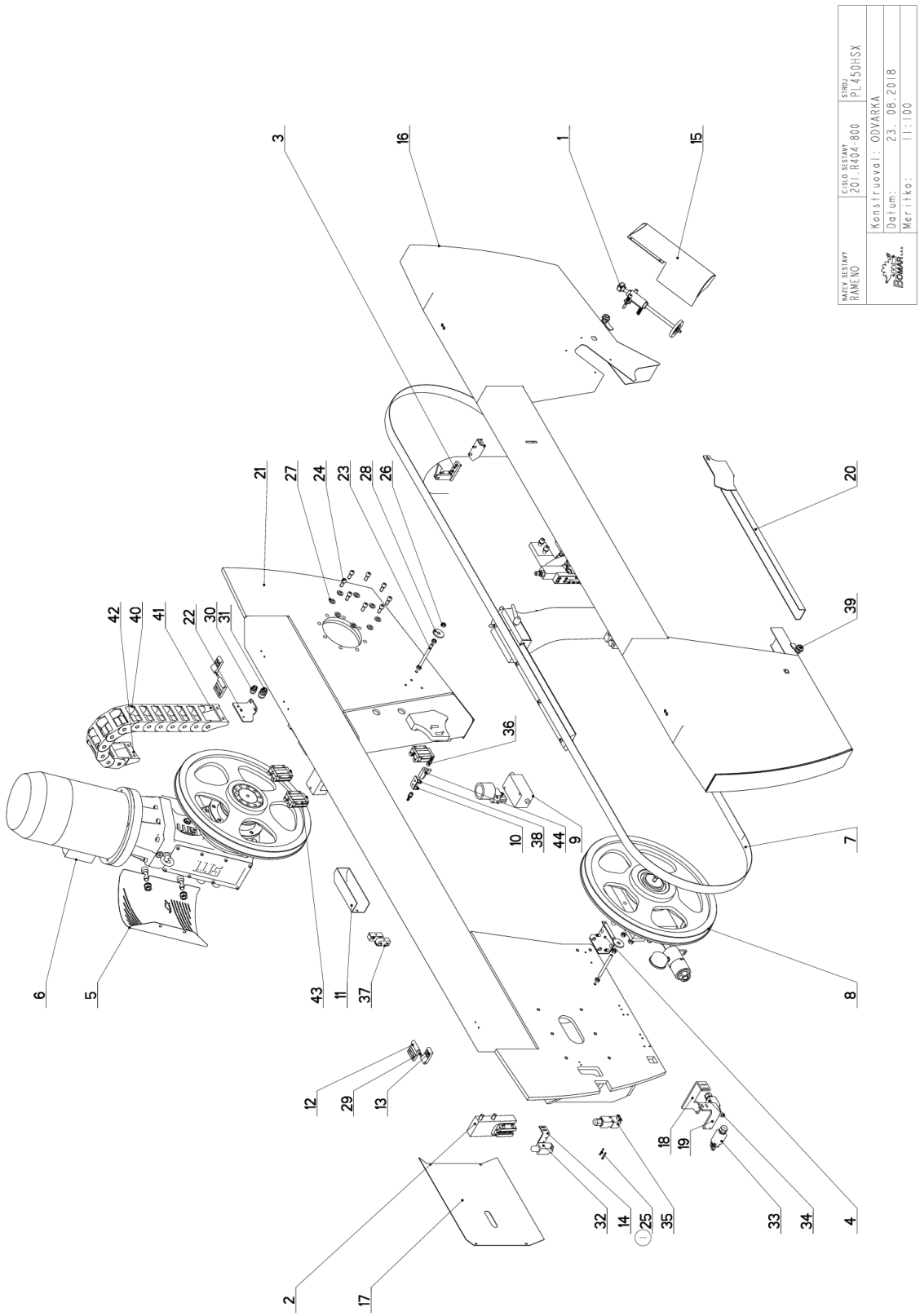

8.4. Kusovník / Piece list / Stückliste - Rameno / Saw arm / Sagerahmen

Cislo Sestavy	Ver.	Nazev sestavy
201.R404-800	1	RAMENO/SAW ARM/SAGERAHMEN

Poz.	Objednaci cislo	Ver.	Nazev polozky	Rozmer	Ks
1	201.9214-300	0	KARTAC / BRUSH / BÜRSTE		1
2	201.R404-020	0	KONZOLA / CONSOLE / KONSOLE		1
3	201.R404-050	0	ZAMEK / LOCK / SCHLOSS		1
4	201.R404-070	0	DRZAK / HOLDER / HALTER		1
5	201.R404-522	0	KRYT / COVER / ABDECKUNG		1
6	201.R405-500	1	POHON / DRIVE / ANTRIEB		1
7	201.R410-000	2	VEDENI PASU / BELT GUIDE / SÄGEBANDFÜHRUNG		1
8	201.Y408-000	2	NAPINANI / TENSIONING / SPANNUNG		1
9	202.6914-100	1	KONTROLA VYCHYLENI PASU / BELT / KONTROLLE DER SÄGEBANDAUSLENKUNG		1
10	30.1814-011	2	DRZAK / HOLDER / HALTER	P 3x76	1
11	30.8914-220	1	KRYT / COVER / ABDECKUNG	P 1.5x153	1
12	30.R304-006	3	PANT / BOARD / PLATTE	PROFIL	2
13	30.R304-007	2	PANT / BOARD / PLATTE	PROFIL	2
14	30.R404-003	0	DRZAK / HOLDER / HALTER	P 3x30	1
15	30.R404-009	0	KRYT KARTACKU / BRUSH COVER / BÜRSTENABDECKUNG		1
16	30.R404-011	2	KRYT / COVER / ABDECKUNG		1
17	30.R404-017	1	KRYT NAPINANI / TENSIONING COVER / BANDSPANNUNGSABDECKUNG	P 1.5x381	1
18	30.R404-040	1	DRZAK / HOLDER / HALTER	P 6x85	1
19	30.R404-041	0	DRZAK / HOLDER / HALTER	P 80x6	1
20	30.R404-066	0	KRYT PASU / BELT COVER / BANDABDECKUNG		1
21	30.R404-101	1	RAMENO / SAW ARM / SÄGERAHMEN		1
22	30.T304-014	1	DRZAK / HOLDER / HALTER	P 4x100	1
23	30.Y304-018	0	TYC ZAVITOVA / THREADED POLE / GEWINDESTANGE	M10	2
24	90.001.25.047	0	SROUB IMBUS / ALLEN HEAD BOLT / IMBUSSCHRAUBE	M10X25	8
25	90.013.9Z.104 (1)	0	SROUB PULKULATY / HALF ROUND BOLT / HALBRUNDSCHRAUBE	M4x30	2
26	90.100.55.006	0	MATICE / NUT / MUTTER	MATICE _ M10	6
27	90.150.50.007	0	PODLOZKA / WASHER / UNTERLEGSCHEIBE	PODLOZKA 13	8
28	90.151.50.002	0	PODLOZKA / WASHER / UNTERLEGSCHEIBE	PODLOZKA 12	2
29	90.307.0Z.001	0	KOLIK / PIN / BOLZEN	D6	2
30	91.070.011	0	VYVODKA / BUSHING / TÜLLE	M16x1.5	1
31	91.070.012	0	VYVODKA / BUSHING / TÜLLE	M20x1.5	1
32	91.173.007	0	SPINAC KONCOVY / END SWITCH / ENDSCHALTER		1
33	91.173.008	0	SPINAC KONCOVY / END SWITCH / ENDSCHALTER		1

Cislo Sestavy/Number of assembly/Nummer der Baugruppe; Verze (Ver.)/Version/Version; Nazev sestavy/Assembly title/Name der Baugruppe; Pozice (Poz.)/Position/Position; Objednaci cislo/Purchase order number/Bestellnummer; Nazev polozky/Volume title/Name der Position; Rozmer/Stock size/Abmessung

8.5. Rameno / Saw arm / Sagerahmen

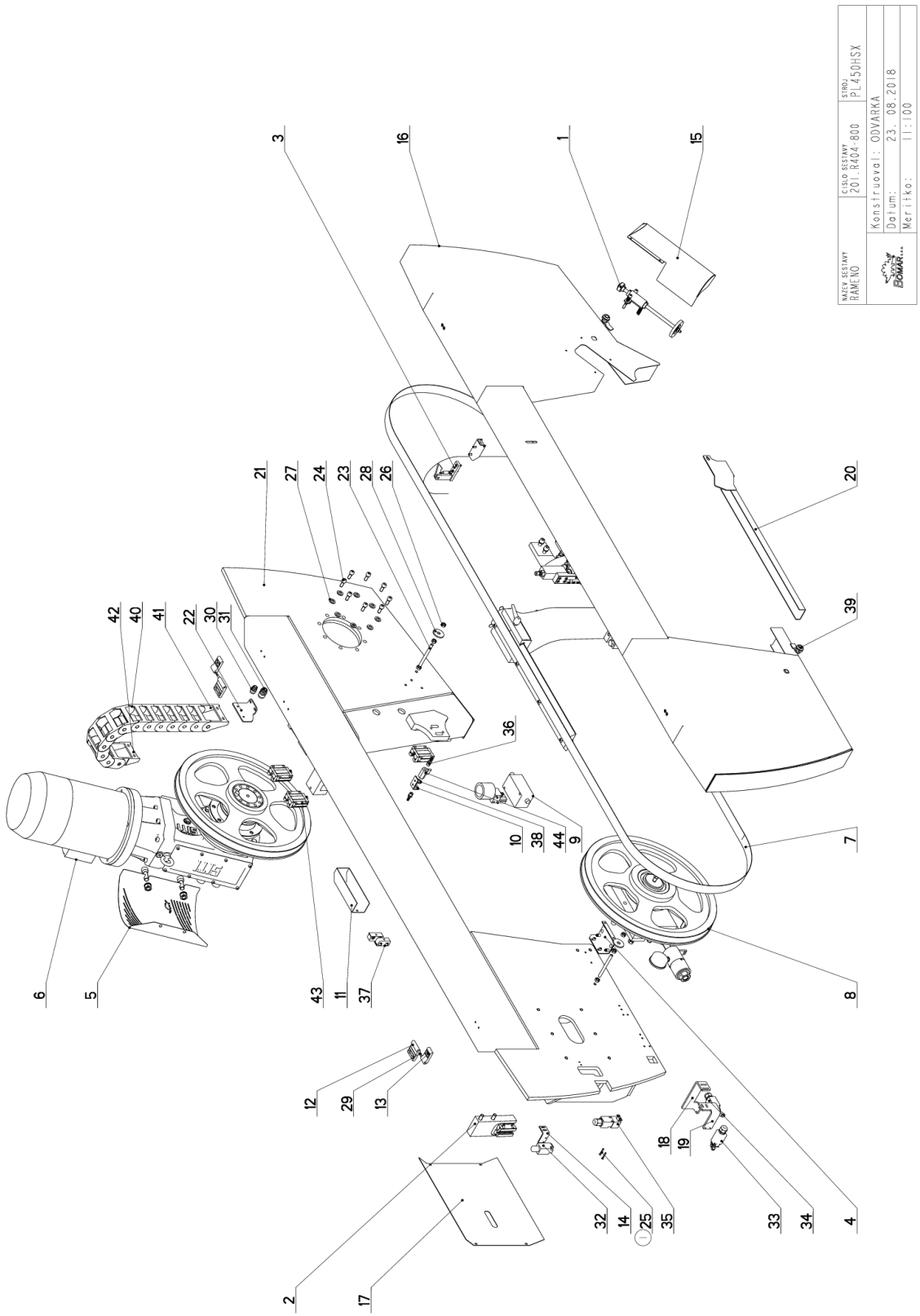

8.6. Kusovník / Piece list / Stückliste - Rameno / Saw arm / Sagerahmen

34	91.173.009	0	SPINAC KONC.S KLADK. / END SWITCH WITH PULLEY / ENDSCHALTER MIT ROLLE	PZ-FR605-M2	1
35	91.173.012	0	SPINAC KONCOVY / END SWITCH / ENDSCHALTER		1
36	94.202.002	0	REDUKCE / REDUCTION / ADAPTOR / REDUKTION	REDUKCE 6/R1/4"	2
37	94.204.005	0	DRZAK / HOLDER / HALTER	LBG 14/14-PP	2
38	96.081.001	0	KROUZEK TESNICI / SEAL RING / DICHTUNGSRING	23x15x3	1
39	99.104.002	0	ZAMEK / LOCK / SCHLOSS	ZAMEK CINSKY	2
40	99.170.001	0	RETEZ ENERGII / ENERGY BELT / ENERGIEKETTE	0555.030.075.100	12
41	99.173.001	0	RETEZ ENERGII / ENERGY BELT / ENERGIEKETTE	KONCOVKA VNEJ	1
42	99.173.002	0	RETEZ ENERGII / ENERGY BELT / ENERGIEKETTE	KONCOVKA VNIT	1
43	99.201.046	0	VEDENI LINEARNI / LINEAR GUIDE / LINEARE FÜHRUNG	MSA25E SS FO N	3
44	99.260.003	0	VENTIL / VALVE / VENTIL	1/4"	1

1.PRID. 2xSROUB M4x30 90.013.9Z.104. 171/ZM290 22.8.2018 SZABARI

Cislo Sestavy/Number of assembly/Nummer der Baugruppe; Verze (Ver.)/Version/Version; Nazev sestavy/Assembly title/Name der Baugruppe; Pozice (Poz.)/Position/Position; Objednaci cislo/Purchase order number/Bestellnummer; Nazev polozky/Volume title/Name der Position; Rozmer/Stock size/Abmessung

8.7. Kryt / Cover / Abdeckung

Cislo Sestavy	Ver.	Nazev sestavy
201.R404-522	0	KRYT/COVER/ABDECKUNG

Poz.	Objednaci cislo	Ver.	Nazev polozky	Rozmer	Ks
1	30.R404-523	0	PLECH / PLATE / BLECH	P1x323	1
2	90.001.25.074	0	SROUB IMBUS / ALLEN HEAD BOLT / IMBUSSCHRAUBE	M16X45	2
3	90.100.55.008	0	MATICE / NUT / MUTTER	MATICE _ M16	2
4	90.152.50.009	0	PODLOZKA / WASHER / UNTERLEGSCHEIBE	M16 DIN6798	2

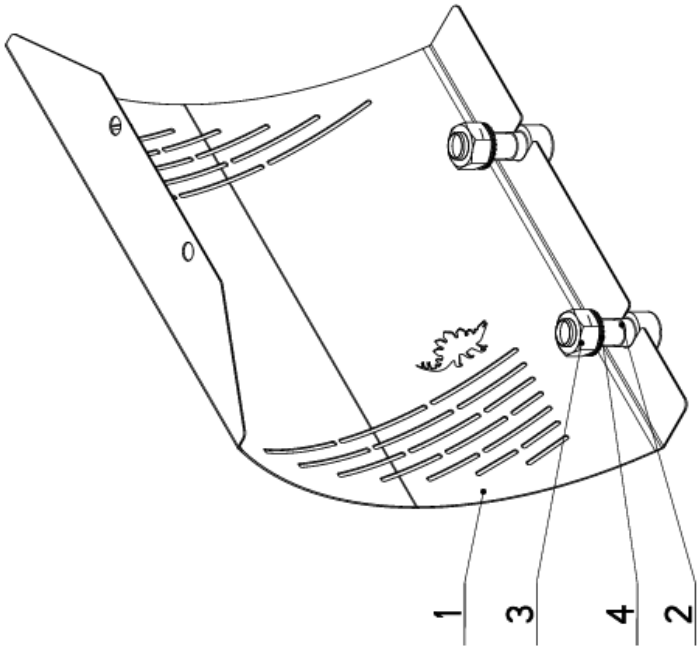

3:10

Cislo Sestavy/Number of assembly/Nummer der Baugruppe; Verze (Ver.)/Version/Version; Nazev sestavy/Assembly title/Name der Baugruppe; Pozice (Poz.)/Position/Position;
Objednaci cislo/Purchase order number/Bestellnummer; Nazev polozky/Volume title/Name der Position; Rozmer/Stock size/Abmessung

8.8. Pohon / Drive / Antrieb

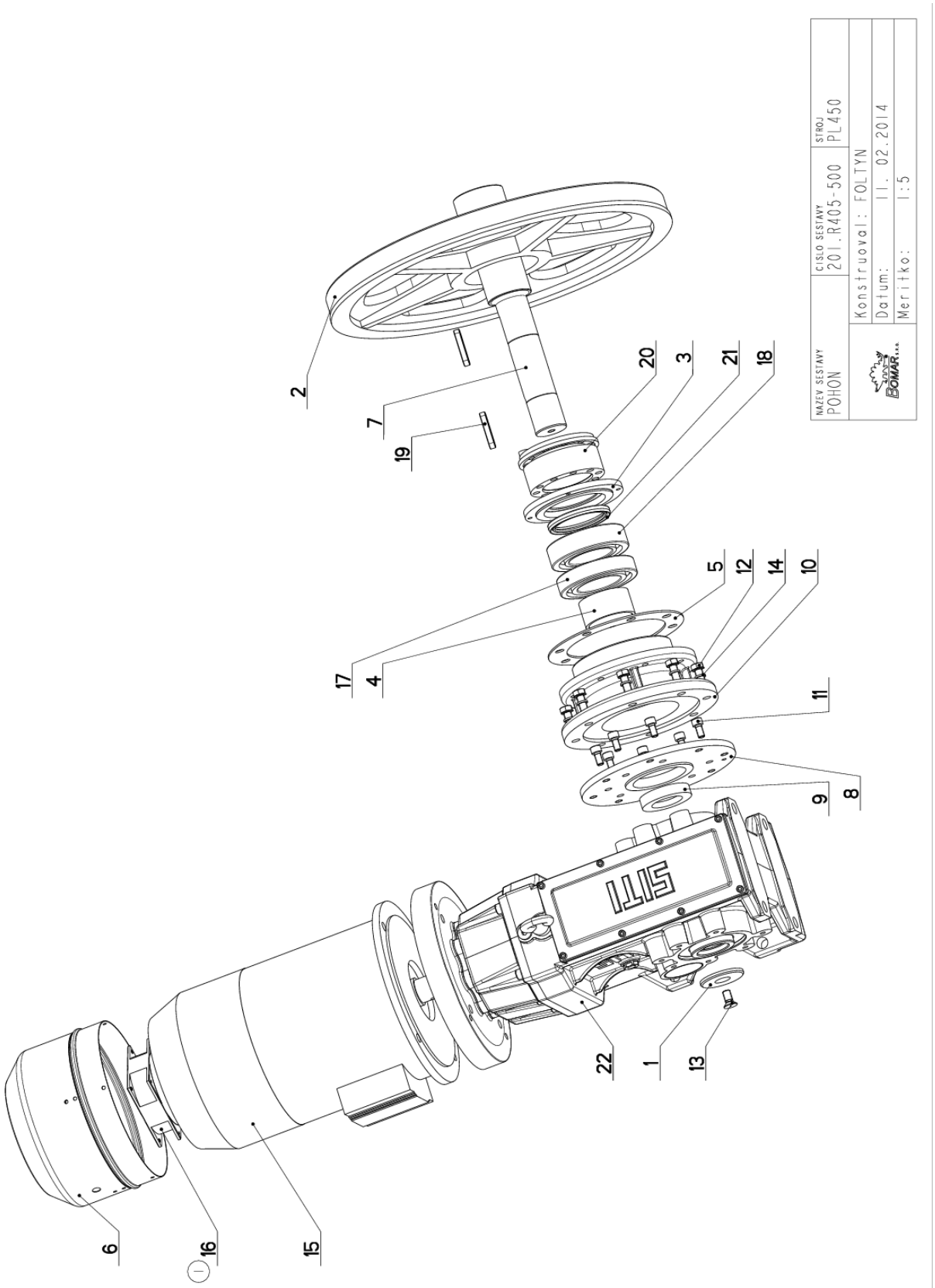

8.9. Kusovník / Piece list / Stückliste - Pohon / Drive / Antrieb

Cislo Sestavy	Ver.	Nazev sestavy
201.R405-500	1	POHON/DRIVE /ANTRIEB

Poz.	Objednaci cislo	Ver.	Nazev polozky	Rozmer	Ks
1	30.1804-010	0	PODLOZKA / WASHER / UNTERLEGSCHEIBE	d 70	1
2	30.6005-001	4	KOLO HNACI / DRIVE WHEEL / ANTRIEBSRAD	ODLITEK	1
3	30.6105-604	1	VIKO / COVER / DECKEL	P 12x159	1
4	30.6105-605	0	KROUZEK DISTANCNI / DISTANCE RING / DISTANZRING	TR 80x5	1
5	30.6105-607	0	KROUZEK DISTANCNI / DISTANCE RING / DISTANZRING	P 4x220	1
6	30.6704-018	3	VENTILATOR / VENTILATOR / VENTILATOR		1
7	30.R405-501	0	HRIDEL / SHAFT / WELLE	d 90	1
8	30.R405-502	0	PRIRUBA / FLANGE / FLANSCHE	P15x250	1
9	30.R405-503	0	KROUZEK DISTANCNI / DISTANCE RING / DISTANZRING	d 80	1
10	30.R405-505	0	PRIRUBA / FLANGE / FLANSCHE	ODLITEK	1
11	90.001.25.046	0	SROUB IMBUS / ALLEN HEAD BOLT / IMBUSSCHRAUBE	M10X20	7
12	90.005.55.033	0	SROUB 6HRANNY / 6 SIDED BOLT / SECHSKANTSCHRAUBE	SROUB M12X35	8
13	90.011.27.025	0	ZAPUSTNY IMBUS / COUNTERSINK BOLT / SENKSCHRAUBE	SROUB M12X25	1
14	90.158.50.009	0	PODLOZKA PRUZNA / SPRING WASHER / FEDERSCHEIBE	PODLOZKA 12	8
15	91.001.167	0	ELEKTROMOTOR / ELECTRIC MOTOR / ELEKTROMOTOR	7,5kW,4P,B5,Vel132, 230_400V	1
16	91.015.126 (1)	0	VENTILATOR / VENTILATOR / VENTILATOR	VENTILATOR RDH1238,B2	1
17	95.001.064	0	LOZISKO / BEARING / LAGER	6214A	1
18	95.201.007	0	LOZISKO / BEARING / LAGER	VALECKOVA L. IRADA	1
19	95.810.032	0	PERO TESNE / SPRING / FEDER	PERO 14X9X60	2
20	95.825.001	0	POUZDRO UPINACI / FIXING SLEEVE / SPANNHÜLSE	KTR210- 80x120	1
21	95.830.052	0	GUFERO / GIT SEAL / DICHTUNG	GUFERO 80X100X10	1
22	99.003.025	0	PREVODOVKA KUZELOCEL / CONICAL TRANSMISSION / KEGELRADGETRIEBE	MBH100C PAM132	1

1.ZRUS.VENTILATOR 91.015.100 A NAHR.91.015.126. 074/ZM025 11.2.2014 SLEZACKOVA

Cislo Sestavy/Number of assembly/Nummer der Baugruppe; Verze (Ver.)/Version/Version; Nazev sestavy/Assembly title/Name der Baugruppe; Pozice (Poz.)/Position/Position; Objednaci cislo/Purchase order number/Bestellnummer; Nazev polozky/Volume title/Name der Position; Rozmer/Stock size/Abmessung