Series **Topline**

# Topline 510.350 DGH

## Operating instructions

**Before transporting and using the machine, please read the instructions thoroughly!**

Seriové číslo / Serien Nummer / Serial Number _____

# Service and information

*Your BOMAR dealer:*

**Direct BOMAR contact:**


| | | |
|---|---|---|
| **BOMAR spol. s r.o.** | telefon: | +420 – 533 426 100 |
| Těžební 1236/1 | fax: | +420 – 533 426 109 |
| 62700 Brno | e-mail: | info@bomar.cz |
| Czech Republic, EU | www: | http://www.bomar.cz |


**We are available:**

| | |
|---|---|
| Mondays to Fridays | $7^{00}$ – $16^{00}$ |

**Version:**

1.01 / March 2016

rev. 1

**BOMAR, spol. s r.o.** © – Subject to modifications and amendments.

# EC Declaration of Conformity

1) We:

**BOMAR, spol. s r.o.**
**Těžební 1236/1**
**627 00 Brno, Czech Republic**
Id. No: 48908827
**declare herewith**

that the following designated device based on its conception and construction as well as the design launched by us meets the relevant basic safety requirements of the decrees of the government.This statement applies exclusively to the machine device in conditions in which it was brought to the market. It does not apply to parts subsequently added by the end user or to modifications performed subsequently by the end user. In the event of any device modification not approved by us this declaration shall lose its validity

| | |
|---|---|
| **Name:** | **Band Saw** |
| **Type :** | **Topline 510.350 DGH** |
| **Serial number:** | |
| **Manufacturer** | **BOMAR, spol. s r.o., Těžební 1236/1, 627 00 Brno** |
| **Product data** | |
| **Determination:** | for cross dividing and cutting of rolled and towed bars and profiles made of steel, stainless steel, non-ferrous metals and plastics |
| **Description:** | Stand, table, cutting unit with the arm, saw band and drive, hand clamping device, cooling system, machine control |
| | Pneumatic *NO* ☒ *YES* ☐ Hydraulic *NO* ☐ *YES* ☒ Control system *NO* ☐ *YES* ☒ |
| **Technical data:** | Cutting rate 20-120 m.min-1 |
| | Cutting angle - 60° až 45° |
| | Total dimensions in mm (lxwxh) 2279x1425x1890 |
| | Total power requirement 6 kW |
| | Weight 1050 kg |

**Documentation:**
Technical documentation for this machine device was elaborated in compliance with Government regulation no. 176/2008, Annex 7, part A.

**The device meets relevant requirements of the given directives:** **2006/42/ES**
**2004/108/ES**

The applied harmonized standards, National standards and technical specifications:

| | | |
|---|---|---|
| ČSN EN ISO 12100:2011 | ČSN EN 13898+A1:2009 | ČSN EN ISO 13857:2008 |
| ČSN EN ISO 4413:2011 | | ČSN EN 60204 -1 ed.2+A1:2009 |
| ČSN EN 55011 ed.3+A1:2011 | ČSN EN 61000-6-2 ed.3:2006 | ČSN EN 61000-6-4 ed.2+A1:2011 |

**The product is safe on condition of the common and determined usage.**

The conformity judging was performed according to §12, par. 3, let. a), of the Law no. 22/1997 Coll. as amended.
The declaration of conformity was carried out in the cooperation with the TÜV SÜD Czech s.r.o, 2) , Novodvorská 994, 142 21 Prague 4 – Czech Republic, Identification number: 63987121 - Inspection body no. 4002.

The inspection certificate no **06.759.511 r1** was issued

BOMAR, spol. s r.o.
Těžební 1236/1, 627 00 Brno
Czech Republic
IČO: 48908827
DIČ: CZ48908827

Brno, 22.2.2016
*Point of issue, datum*

**Alfred Pichlmann, Managing Director**
*Name and function of the responsible subject, signature*

Person authorized to complete the technical documentation:: BOMAR, spol. s r. o., Těžební 1236/1, 627 00 Brno

1) Name, address and identification number of the subject issuing the conformity declaration (producer of importer)
2) The authorized or accredited body co-operating on the conformity judging

| | |
|---|---|
| ! | If the equipment is installed without safety equipment offered by BOMAR, spol. s ro or its agents and used by the customer (or buyer) then EC declaration loses validity.<br>EC Declaration of conformity is valid only if customer (buyer) installed the BOMAR safety equipment with the machine or with some other with equivalent safety device in accordance with current applicable regulations and standards.<br>All machine elements and components that were built into the device by BOMAR, spol. s ro have been declared "identical" to a safety device, as offered by BOMAR, spol. s ro or its agents. |

# Content


## 1. BEZPEČNOSTNÍ POKYNY/ SICHERHEITSHINWEISE/ SAFETY NOTES ..... 9

1.1. Machine determination ..... 11
1.2. Protective suit and personal safety ..... 11
1.3. Safety notes for machine operator ..... 12
1.4. Safety notes for the servicing and repairs ..... 13
1.5. Safety instructions for cooling system ..... 13
1.5.1. Instructions for first aid ..... 13
1.6. Safety notes for the servicing and repairs of the hydraulic unit ..... 13
1.7. Safety machine accessories ..... 14
1.7.1. Total Stop ..... 14
1.7.2. Saw arm cover ..... 14
1.7.3. Saw band stretching and rupture inspection ..... 15
1.7.4. Band saw covers ..... 15
1.7.5. Brush cover ..... 15
1.8. Umístění štítku stroje / Maschinenschild position / Position of machine label ..... 16
1.9. Umístění bezpečnostních značek / Verteilung der Sicherheitszeichen / Position of safety symbols ..... 17

## 2. DOKUMENTACE STROJE/ DOKUMENTATION DER MASCHINEN/ MACHINE DOCUMENTATION/ ..... 19

2.1. Technická data / Technische Daten / Technical data ..... 21
2.2. Rozměrové schéma / Aufstellzeichnung / Installation diagram ..... 22
2.3. Popis / Beschreibung / Description ..... 23
2.4. Transportation and stocking ..... 24
2.4.1. Conditions for transportation and stocking ..... 24
2.4.2. Transport and stocking preparations ..... 24
2.4.3. Transport and stocking ..... 24
2.4.4. Transportní schéma / Transport schema / Transport scheme ..... 25
2.5. Activation ..... 26
2.5.1. Machine working conditions ..... 26
2.6. Band saw unpacking and assembling ..... 26
2.6.1. Machine installing and levelling ..... 26
2.6.2. First run of the power pack ..... 27
2.6.3. Einfüllung des Hydraulikbehälters ..... 27
2.6.4. Verankerungsplan / Grounding plan ..... 28
2.6.5. Electrical connection ..... 29
2.6.6. .Check the direction of the saw band ..... 30
2.6.7. Check machine connection into electrical network ..... 30
2.6.8. Filling of the cooling system ..... 30
2.7. Check machine function ..... 30
2.7.1. Machine disposal after lifetime ..... 31
2.8. Saw band ..... 31
2.8.1. Saw band size ..... 31
2.8.2. Selection of the saw band tooth system ..... 31
2.8.3. Saw band running-in ..... 31
2.8.4. Tables for teeth selection ..... 32

## 3. OVLÁDÁNÍ STROJE/ BEDIENUNG DER MASCHINE/ MACHINE CONTROL ..... 33

3.1. Starting the band saw ..... 35
3.2. Control panel ..... 36
3.2.1. Control panel description ..... 37
3.3. Machine referencing ..... 39
3.4. Control of the machine Topline 510.350 DGH ..... 44
3.4.1. Semi-automatic cycle ..... 44
3.5. Control of the machine Topline 510.350 DGH with automatic swivel of the arm angle ..... 45
3.5.1. Manual control ..... 45
3.5.2. Semiautomatic mode ..... 45
3.5.3. Cycle breaking ..... 49
3.6. Machine setup ..... 49
3.6.1. SERVICE ..... 50
3.6.2. SETUP ..... 52
3.6.3. Machine error messages ..... 54
3.7. Band saw adjusting ..... 55
3.7.1. Angular cut setting ..... 55
3.7.2. Laserliner – optional accessory ..... 56
3.7.3. Saw frame lift stop setting – just for Topline 510.350 DGH ..... 56
3.7.4. Adjusting band guides ..... 57
3.7.5. Cutting speed adjusting ..... 57
3.7.6. Adjustment of pressure to the cut ..... 58
3.7.7. Speed adjustment of the arm lowering ..... 58

3.7.8. Brush setting ... 59
3.7.9. Halogen lighing of working area (optional accessory) ... 60
3.8. Material insertion ... 61
3.8.1. Handling agent selection ... 61
3.8.2. Insertion ... 61
3.8.3. Bundle material cutting ... 61

**4. ÚDRŽBA STROJE/ WARTUNG/ MACHINE SERVICE ... 63**

4.1. Saw band dismantling ... 65
4.2. Saw band installation ... 66
4.3. Saw band stretching and inspection ... 68
4.4. Adjusting of the saw band run ... 69
4.4.1. Saw band run inspection ... 69
4.4.2. Saw band run setting ... 70
4.5. Saw frame lower position stop adjustment ... 70
4.6. Check and adjustment of switches and sensors ... 71
4.6.1. Setting of the limit switch monitoring the band tightening ... 71
4.6.2. Check of adjustment of limit switches of the upper and lower position of the arm 72
4.6.3. Check of setting of the inductive sensor of the bundler opening ... 75
4.6.4. Check and adjustment of the vice opening limit switch ... 77
4.6.5. Check and adjustment of the table position inductive sensors ... 79
4.6.6. Check of switches and sensors of the arm rotation ... 81
4.7. Check of the inductive switch to control the thrust to cut ... 86
4.8. Adjustment of the device for control of thrust to cut ... 86
4.9. Cooling agents and chips disposal ... 87
4.9.1. Coolant device inspection ... 87
4.9.2. Mikroniser(box) – mist lubrication ... 88
4.9.3. Connecting to the compressed air supply ... 91
4.10. Chips disposal ... 91
4.11. Hydraulic, Greases and oils ... 91
4.11.1. Gearbox oils ... 91
4.11.2. Lubricant greases ... 92
4.11.3. Lubrication ... 93
4.11.4. Hydraulic oils ... 93
4.11.5. Hydraulic unit service ... 94
4.12. Machine cleaning ... 95
4.13. Worn pieces replacement ... 95
4.13.1. Hard metal guides replacement ... 95
4.13.2. Hard metal guides adjustment on the machine ... 96
4.13.3. Saw band guiding pulleys replacement ... 97
4.13.4. Pushing bearing replacement ... 99
4.14. Brush replacement ... 101

**5. ZÁVADY / STÖRUNGEN TROUBLESHOOTING ... 103**

5.1. Mechanical problems ... 105
5.2. Electric and hydraulic problems ... 107
5.3. Hydraulic problems ... 108

**6. SCHÉMATA / SCHEMAS / SCHEMATICS ... 111**

6.1. Elektricke schema / Elektroschema / Wiring diagram ... 113
6.2. Hydraulické schéma / Hydraulikschema / Hydraulic diagram ... 134

**7. VÝKRESY SESTAV PRO OBJEDNÁNÍ NÁHRADNÍCH DÍLŮ / ZEICHNUNGEN FÜR BESTELLUNG DER ERSATZTEILE / DRAWING ASSEMBLIES FOR SPARE PARTS ORDER ... 137**

7.1. TOPLINE 510.350 DGH ... 138
7.2. Kusovník / Piece list / Stückliste - TOPLINE 510.350 DGH ... 139
7.3. TOPLINE 510.350 DGH ... 140
7.4. Kusovník / Piece list / Stückliste - TOPLINE 510.350 DGH ... 141
7.5. Topline 510.350 DGH s automatickým natáčením úhlu ramene ... 142
7.6. Kusovník / Piece list / Stückliste - Topline 510.350 DGH s automatickým natáčením úhlu ramene ... 143
7.7. Topline 510.350 DGH s automatickým natáčením úhlu ramene ... 144
7.8. Kusovník / Piece list / Stückliste - Topline 510.350 DGH s automatickým natáčením úhlu ramene ... 145
7.9. Podstavec / Base / Untersatz ... 146
7.10. Kusovník / Piece list / Stückliste - Podstavec / Base / Untersatz ... 147
7.11. Brzda / Drive / Antrieb Topline 510.350 DGH ... 148
7.12. Brzda / Brake / Bremse Topline 510.350 DGH ... 149
7.13. Doraz / Stop piece / Anschlag Topline 510.350 DGH ... 150
7.14. Konzola otočná / Turnable consol / Drehkonsole ... 152
7.15. Kusovník / Piece list / Stückliste - Konzola otočná / Turnable consol / Drehkonsole ... 153
7.16. Sloup / Pole / Säule ... 154
7.17. Kusovník / Piece list / Stückliste - Sloup / Pole / Säule ... 155
7.18. Odměřování / Measuring / Gehrungsmessung ... 156
7.19. Sloup / Pole / Säule ... 158
7.20. Kusovník / Piece list / Stückliste - Sloup / Pole / Säule ... 159
7.21. Svěrák / Vice / Schraubstock ... 160
7.22. Kusovník / Piece list / Stückliste - Svěrák / Vice / Schraubstock ... 161
7.23. Válec upínací / Fixing cylinder / Spannzylinder ... 162

7.24. Kusovník / Piece list / Stückliste - Válec upínací / Fixing cylinder / Spannzylinder....163
7.25. Spínač tlakový / Pressure switch / Druckschalter....164
7.26. Rameno / Saw arm / Sägerahmen....166
7.27. Kusovník / Piece list / Stückliste - Rameno / Saw arm / Sägerahmen....167
7.28. Rameno / Saw arm / Sägerahmen....168
7.29. Kusovník / Piece list / Stückliste - Rameno / Saw arm / Sägerahmen....169
7.30. Převodovka / Transmission / Getriebe....170
7.31. Napínání / Tensioning / Spannung....172
7.32. Kusovník / Piece list / Stückliste - Napínání / Tensioning / Spannung....173
7.33. Vedení pásu / Belt guide / Sägebandführung....174
7.34. Kusovník / Piece list / Stückliste - Vedení pásu / Belt guide / Sägebandführung....175
7.35. Kostka vodící / Lead cube / Führungsklotz....176
7.36. Kusovník / Piece list / Stückliste - Kostka vodící / Lead cube / Führungsklotz....177
7.37. Kostka vodící / Lead cube / Führungsklotz....178
7.38. Kusovník / Piece list / Stückliste - Kostka vodící / Lead cube / Führungsklotz....179
7.39. Pohon / Cart / Wagen....180
7.40. Kusovník / Piece list / Stückliste - Pohon / Cart / Wagen....181
7.41. Podstavec svěráku / Vice base / Schraubstockuntersatz....182
7.42. Kusovník / Piece list / Stückliste - Podstavec svěráku / Vice base / Schraubstockuntersatz....183
7.43. Brzda / Brake / Bremse Topline 510.350 DGH....184
7.44. Pohon/ Drive/ Antrieb Topline 510.350 DGH-A....186
7.45. Kusovník / Piece list / Stückliste - Pohon/ Drive/ Antrieb Topline 510.350 DGH-A....187
7.46. Pohon/ Drive/ Antrieb Topline 510.350 DGH-A....188
7.47. Kusovník / Piece list / Stückliste - Pohon/ Drive/ Antrieb Topline 510.350 DGH-A....189
7.48. Brzda/ Brake/ Bremse Topline 510.350 DGH-A....190
7.49. Snímač magnetický/ Magnetic sensor/ Magnetsensor Topline 510.350 DGH-A....191
7.50. Pohon/ Drive/ Antrieb Topline 510.350 DGH-A....193
7.51. Válec pomocný/ Auxiliary cylinder/ Hilfzylinder Topline 510.350 DGH-A....194
7.52. Kusovník / Piece list / Stückliste - Válec pomocný/ Auxiliary cylinder/ Hilfzylinder Topline 510.350 DGH-A195
7.53. Ovladací panel / Control panel / Bedienpult....196
7.54. Kusovník / Piece list / Stückliste - Ovladací panel / Control panel / Bedienpult....197

# 1. Bezpečnostní pokyny/ Sicherheitshinweise/ Safety notes

The operating instructions must be read by the person, who keeps in touch with the machine before transportation, installation, using, servicing, reparation, stocking or removal!

The operating instructions include relevant information. The operator must familiarise himself with the install and operation, safety notes and machine servicing, because reliability and service life must be reached. The operating instructions must avoid risks, which are linked to work on the machine. Before transporting and using of the machine, please read the instructions thoroughly!

***Attention!***
*The operating instructions must be available at the machine!*
*Keep the operating instructions in good condition!*

## 1.1. Machine determination

The band saws **Topline 510.350 DGH** are determined for cutting and shortening of rolled bars and drawn bars and profiles from steels, stainless steels, non-ferrous metals and plastics **with cutting angle from -60° to 45°.**

**Combustible materials are excepted for cutting!** Any other usage and operation outside this range are unauthorized and the manufacturer/supplier does not accept any responsibility for any damages resulting from such misuse. **The operator has full responsibility!**

The machine is equipped with safety and protective guarding for operator and machine protection. Nevertheless, this safety and protective guarding cannot prevent injury. Service personnel must read this chapter and comprehend it, before he starts to work on the machine. **Always keep instructions about work safety!** Service personnel must take into account other aspects of the risk, which refer to the ambient conditions and the material.

## 1.2. Protective suit and personal safety

**Wear tight fitting overalls!** Loose fitting clothes may be caught with machine parts and cause serious injury.

**Wear protective gloves!** Material cuts and saw band have sharp edges and may cause serious injuries.

***Attention!***
*Gloves you can use only at working material replacement (saw band)! The machine and accessories must be inactive!*
*If the machine is running, you must not wear gloves! It is dangerous, because some parts of the machine can catch gloves!*

**Wear protective shoes with non-skid soles!** The unsuitable shoes may cause balance loss and following injury. Falling work pieces may cause serious injuries too.

**Wear protective goggles!** Chips and cooling liquid may damage your eyes.

**Always wear ear protections!** Most of the machines emit up to 80 dB and may damage your hearing.

**Do not wear jewellery and always tie back long hair!** Moving machine parts can catch jewellery or loose hair and may cause serious injuries.

**Operate the machine only when you are fit enough to work.** Illnesses or injuries diminish concentration. Avoid machine work, which may compromise the safety of you and your colleagues!

***Attention!***
***Mind the safety signs on the machine. Do not remove or damage them! Keep these labels always readable!***

## 1.3. Safety notes for machine operator

***Attention!***
*Machine can only be operated by a person older than 18 years! Machine can be operated only by a person physically and mentally fit for this activity.*

Machine can only be operated only by one person at a time. Machine operator is responsible for other people present near the machine.

The person who is operating the machine using the control elements (control panel and other) must not either alone or with help of other workers move the cut or otherwise machined material at the same time.

***Follow the instructions and directives for work safety!***
*Read the operating instructions before you start to work on the machine! Keep the operating instructions in good condition!*

Close covers before starting the machine and check, if the covers are not damaged. Damaged covers must be repaired or replaced immediately. Do not start the machine, if any cover is removed!

***Attention!***
***Do not connect the machine to electricity if the door or any covers are removed. Do not touch the high voltage electrical equipment (transformers, motors, terminals or wiring).***

- Check, if the electric cables are not damaged.
- Do not hold or manipulate the material during clamping or cutting!
- Do not operate the buttons and switches on the control panel wearing gloves! You may press a wrong button.
- Make sure, that there is nobody in the working area of the machine (the working area of the vice, the saw band, the saw arm etc.) during a working cycle and when starting the machine.
- Under no circumstances touch any rotating elements.
- Use the machine only when it is in a good condition!
- Check at least once in a shift, if the machine is not visibly damaged. If you discover any such damage, you must bring the machine to a halt and inform your superior!
- Keep your working area and machine clean and uncluttered! Ensure sufficient lighting in the working area.
- Take off any spilt water or oil from the floor and dry it immediately to avoid a possibility of injury.
- Do not touch the cooling liquid with bare hands!
- Do not adjust the cooling liquid nozzle if the machine is running.
- Do not remove the chips from the working area of the machine, when the machine is running!
- Do not use compressed air for machine cleaning or for chip removal!
- Use protective gear for chip removall!

## 1.4. Safety notes for the servicing and repairs

***Attention!***
*Only a qualified professional can carry out the servicing and repairs of the electrical equipment! Take special care during the work with electrical equipment. High voltage shock can have fatal consequences! Always follow the work safety instructions! Otherwise, there is possibility of heavy injury!*

- Switch off the main switch and lock it, before you start service work! If you have the Practix type of machine, disconnect it from electrical network. This way you eliminate a possibility of starting the machine accidentally.
- Take care when manipulating the frequency converter. It is still energized for 20 minutes after machine shutdown.
- Always adhere to the safety instructions!
- Only an authorized professional can carry out the servicing and repairs.
- For parts replacement, use only those, which are identical with the originals. Otherwise, there is possibility of health hazard.
- Use only recommended types of hydraulic oils, oils and lubricants!
- Do not remove or lock the limit switches or any other safety equipment!
- Any use of the saw, accessories or machine parts other than that intended by BOMAR, spol. s r.o. company is not permitted. The guarantee on this product will be lost afterward and BOMAR, spol. s r.o. takes no responsibility for damage caused.
- Do not turn the machine on if all covers are not in place.

## 1.5. Safety instructions for cooling system

***Attention!***
- *When handling the coolant always keep to the work safety directives and instructions of the manufacturer.*
- *When handling cooling agents always wear safety fluid-proof gloves!*
- *Wear protective goggles!*
- *Cooling liquid can get in contact with your eyes and may cause severe injuries*

### 1.5.1. Instructions for first aid

1. Pull off and safely remove polluted, soaked clothing.
2. If inhaled, go outside on fresh air or look for first aid treatment.
3. Wash with water and eventually treat with crème any points of contact with the skin.
4. Rinse your eyes with water and seek out a doctor.
5. If swallowed, drink a lot of water and induce vomiting. Look for medical help

## 1.6. Safety notes for the servicing and repairs of the hydraulic unit

Compliance with the principles of cleanliness is a basic requirement for trouble-free operation of hydraulic equipment. Hydraulic components are high precision products, and any contamination leads to a reduced lifetime or even malfunction. The consequences are very difficult and expensive to remove.

Always use clean tools. Parts and fasteners, which are a part of hydraulic circuit, are never to be put on a dirty surface. The best cleaning agent is crepe paper, because fibers from a cleaning cloth can cause malfunction.

Protective caps on threaded chambers are to be removed just before the assembly of the unit.

Flush hoses and pipes with gasoline or other cleaning agent and blow through with compressed air before mounting.

Bolting must be properly tightened. However, do not use brute force.

## 1.7. Safety machine accessories

The machine is equipped with safety accessories. It protects the operator from injuries and the machine before damage. The safety accessories are blocking accessories, emergency switches and covers.

Check once in a week the function of the safety accessories. If the safety accessories are functionless, you must stop work and repair or change the safety accessories.

***Enhanced risk!***
*Do not come into or intervene in the cutting area. Otherwise, there is a danger of injury, cutting or squeezing.*

### 1.7.1. Total Stop

**TOTAL STOP** button is used for emergency switching – off of the machine in a case of defect or health hazard. By pressing the **TOTAL STOP** button the supply of electrical power is interrupted.

**If any faults or states of emergency appear, immediately press the TOTAL STOP button!**

Release of pressed button is possible by twisting the upper part of the button.

The TOTAL STOP button is placed on the control panel of the machine.

### 1.7.2. Saw arm cover

If the cover is opened during operation, the limit switch is opened and the band saw is stopped. The band saw is not possible to start in set mode.

***The band saw is stated to the operation, when the covers is closed!*** Limit switched on saw arm control if cowers are open or not.

### 1.7.3. Saw band stretching and rupture inspection

This device checks the saw band stretching and causes immediate machine shut – down in the event the band ruptures.

The device contains limit switch. Check the stretching carefully and periodically – eventually adjust.

### 1.7.4. Band saw covers

These protective covers eoverlap the saw band in the areas from guiding cubes to the arm.

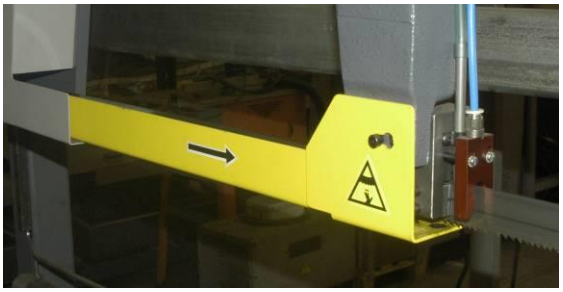

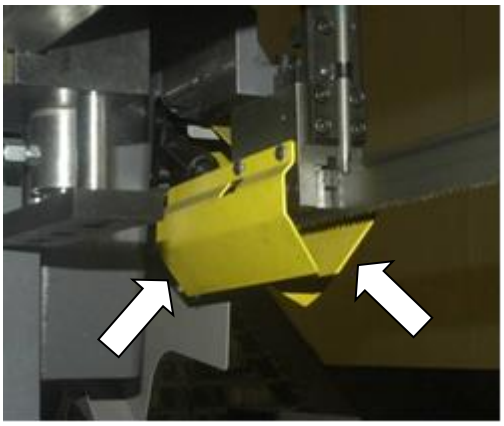

**Never switch on the saw band driver if this cover is not mounted**!

### 1.7.5. Brush cover

It covers the brush for saw blade.

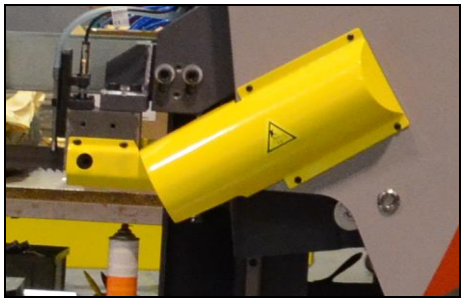

Never switch on the saw band driver if this cover is not mounted!

## 1.8. Umístění štítku stroje / Maschinenschild position / Position of machine label

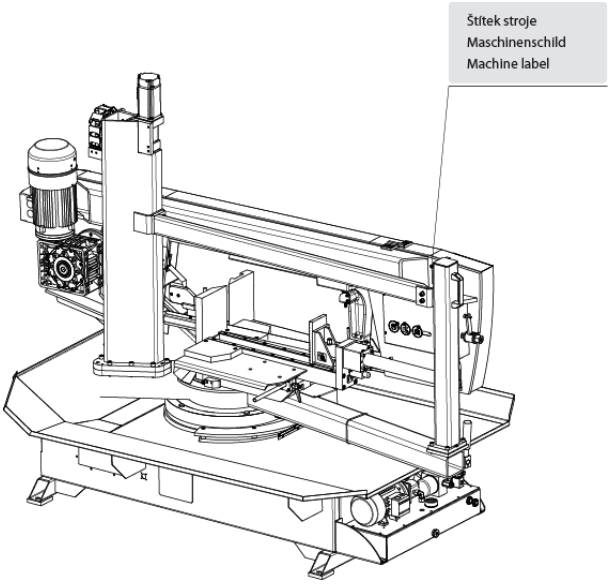


Machine label is placed on saw arm between pile and saw band drive.

## 1.9. Umístění bezpečnostních značek / Verteilung der Sicherheitszeichen / Position of safety symbols

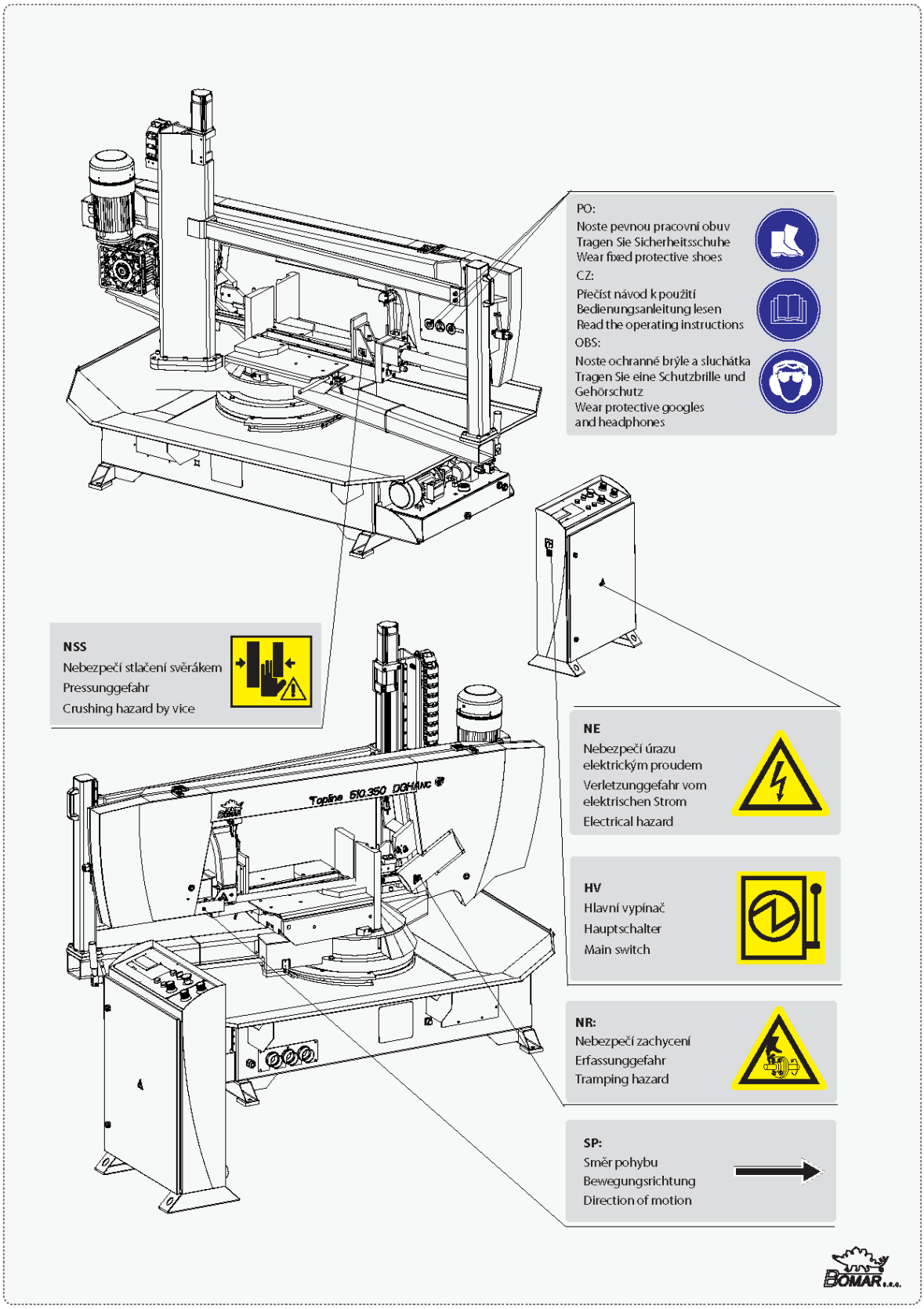

# 2. Dokumentace stroje/ Dokumentation der Maschinen/ Machine documentation/

## 2.1. Technická data / Technische Daten / Technical data

| | |
|---|---|
| **Hmotnost stroje / Maschinengewicht / Machine weight:** | |
| • Hmotnost / Gewicht / Weight | 1400 kg |
| **Rozměry stroje / Maschinengröße / Machine size :** | |
| • Délka / Länge / Lenght | 2350 mm |
| • Šířka / Breite / Width | 2450 mm |
| • Výška / Höhe / Height | 2100 mm |
| **Elektrické vybavení / Elektrische Ausrüstung / Electical equipment:** | |
| • Napájení / Versorgungsspannun / Supply voltage | ~3 x 400 V (230 V), 50Hz, TN-C-S/TN-C |
| • Příkon / Gesamptschlusswert / Total Input | 5,2 kW |
| • Max.jištění / Max. Vorschaltsicherung / Max. Fuse | 16 A |
| • Krytí / Schutzart / Protection | IP 54 |
| **Akustický tlak / Schalldruckpegel / Acoustic pressure:** | |
| • Individual 520.360 DGH | $L_{Aeqv}$=76,3 dB |
| **Pohon / Atrieb / Drive:** | |
| • Typ / Typ / Type | BN112M4 |
| • Napájení / Versorgungsspannun / Supply voltage | ~3 x 400V, 50Hz |
| • Výkon / Leistung / Output | 3 kW |
| • Jmenovité otáčky / Motornenndrehzahl / Nominal speed | 1440 $min^{-1}$ |
| **Hydraulické zařízení / Hydraulikeinrichtung / Hydraulic equipment:** | |
| • Typ / Typ / Type | SSM-3/79+76+16-1/3-17/02400 |
| • Výkon / Leistung / Output | 3 kW/8 MPa |
| **Chladící zařízení / Kühlmiteleinrichtung / Cooling equipment:** | |
| • Typ / Typ / Type | 3-COA4-12 |
| • Výkon / Leistung / Output | 0,05 kW |
| • Obsah nádrže / Volumen vom Kühlmittel / Capacity | 35 l |
| **Rozměr pásu / Sägebanddimension / Band size:** | |
| **4780×34×1,1 mm** | |
| **Řezná rychlost / Schnittgeschwindigkeit / Cutting speed:** | |
| **20–120 m/min.** | |

**Řezné rozsahy / Schnittbereiche / Cutting size:**

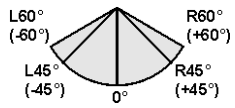


| | | | | |
|---|---|---|---|---|
| 0° | Ø360 mm | 520×360 mm | 360×520 mm | 360×360 mm |
| 45° R | Ø360 mm | 360×325 mm | 360×310 mm | 350×350 mm |
| 45° L | Ø360 mm | 365×350 mm | 360×320 mm | 320×320 mm |
| 60° R | Ø240 mm | 240×310 mm | 360×190 mm | 240×240 mm |
| 60° L | Ø255 mm | 250×340 mm | 360×200 mm | 250×250 mm |

**Warning:**
If the material detection device is installed on machine maximal workpiece height is 10 mm shorter.

**Level of acoustic pressure:**
Equivalent level of acoustic pressure A (noise) at operator position are $L_{Aeqv}$=76,3 dB. Mentioned values are levels of emission which doesn't have to represent safe levels. Factors which influence real level of acoustic pressure on machine operator are: working place characteristics, cut material, saw band. These factors have significantly influence on acoustic pressure.

## 2.2. Rozměrové schéma / Aufstellzeichnung / Installation diagram

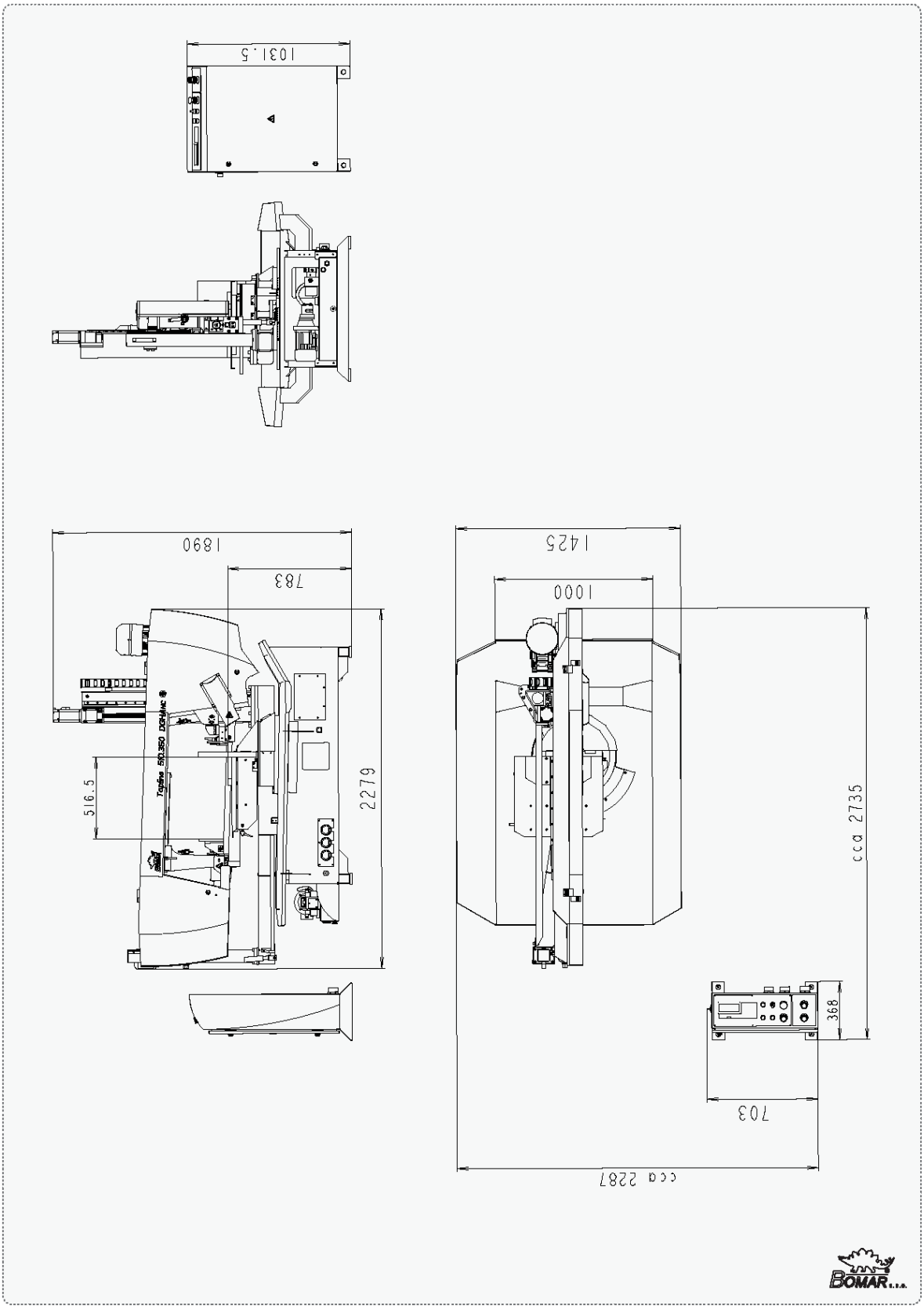

## 2.3. Popis / Beschreibung / Description

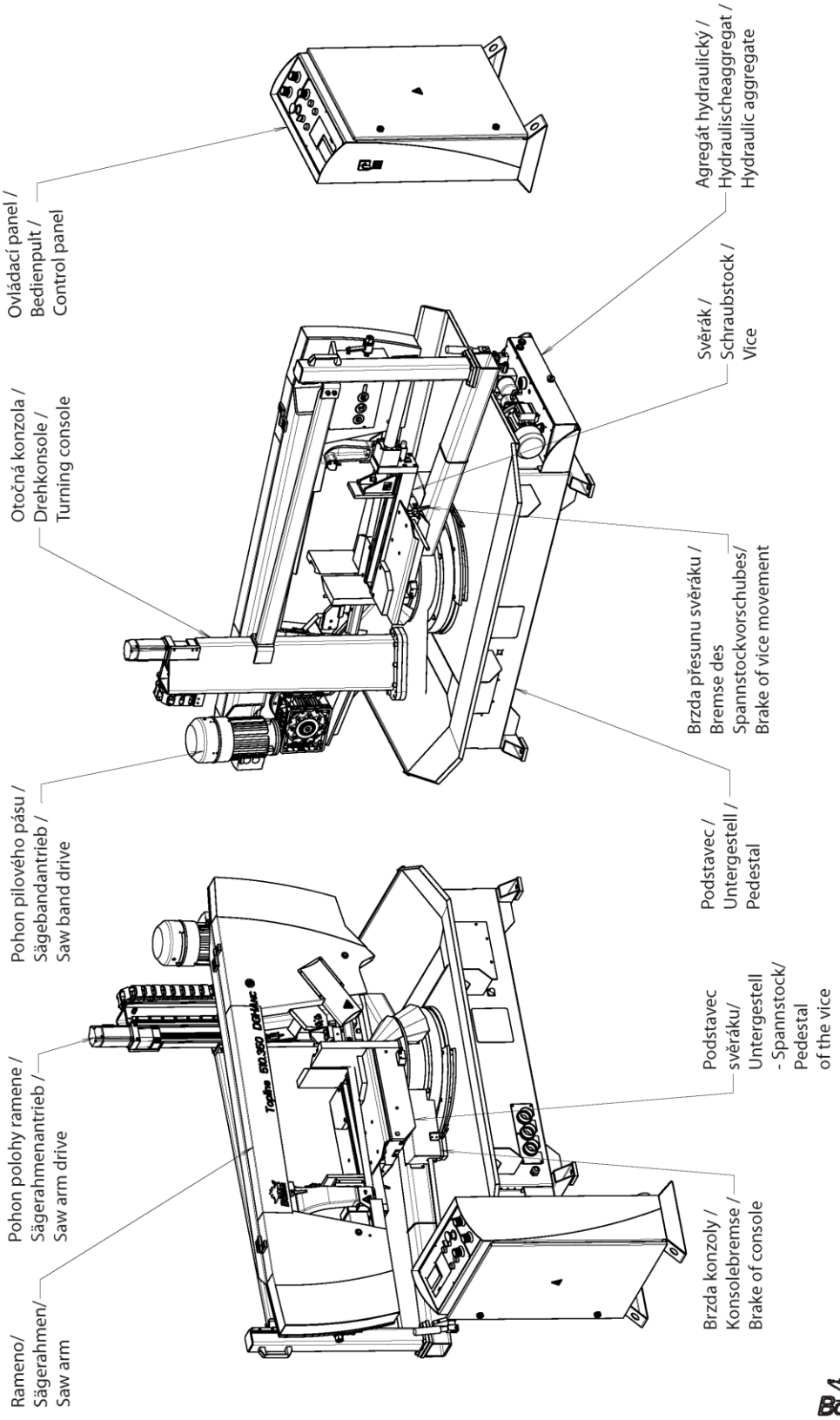

## 2.4. Transportation and stocking

### 2.4.1. Conditions for transportation and stocking

Keep recommendations for the manufacturers for transportation and stocking! If the recommendations are not kept, damage can occur to the machine.

- Don't use a forklift truck for handling the machine, if you do not have license for it!
- Don't move under suspended loads! Fault in lifting device may cause serious injury.
- Keep a safe distance from the machine during the transport.
- Temperature of the air from *-25℃ to 55℃*, for a *short term* (max. 24 hours) temperature of the air until *70℃*
- Do not expose the machine to radiation (for example microwave radiation, ultraviolet radiation, laser radiation, x-ray radiation). Radiation can cause problems with the machine function and deteriorating condition of the isolation.
- Take measures, to prevent damage by dampness, by vibrations and by shakes.

### 2.4.2. Transport and stocking preparations

Close the vice and thoroughly oil all blank surfaces.

Lower the saw frame to the lowest position.

Make sure to empty the machine of all traces of the cooling agent.

Fasten all loose parts securely to the machine.

Pack and wrap the control desk securely to avoid damage during transport.

Fix the stickers stating the minimum approximate machine weight to at least five well visible places.

### 2.4.3. Transport and stocking

Handle the machine only with a hand pallet truck or a forklift truck! Always place the forks of the forklift from the side of the saw accordingly to the transport diagram.

- Make sure that the hand pallet truck or forklift truck have sufficient lifting capacity.
- Make sure that the van or the trailer had sufficient capacity
- The machine must be secured sufficiently during transportation so it won't roll over or fall off the vehicle.
- Fasten the pallet to the floor of the vehicle.
- Beware of damaging the machine during transportation.
- It is forbidden to handle the machine in any way different from that written in these operating instructions (for example lifting it by the saw arm); the machine could get damaged!
- Store the machine only under conditions mentioned in the manual to avoid damaging it.
- Place the forks of a fork lift truck according to these signs!

## 2.4.4. Transportní schéma / Transport schema / Transport scheme

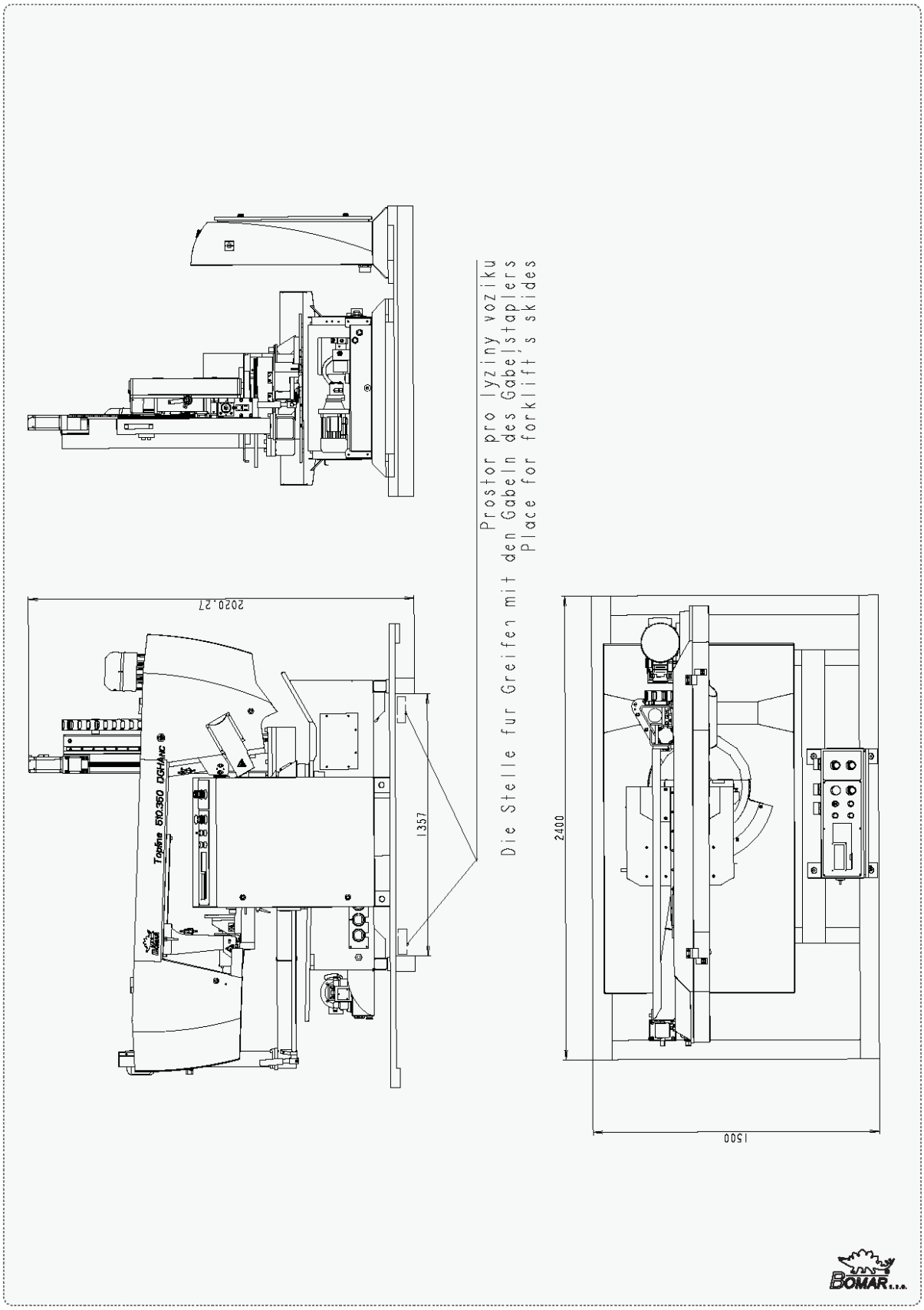

## 2.5. Activation

### 2.5.1. Machine working conditions

Keep the conditions of the manufacturer for machine operating! If recommendations are not kept, damage can occur to the machine.

**The manufacturer warrants the correct function of the machine for these conditions:**

- At temperature air from ***10°C to 40°C***, the temperature average during 24 hours must ***not exceed over 35°C***.
- At relative dampness of the air in the extend from 30% to 95% (not concentrate). Altitude lower than 1000 metres.
- Do not expose the machine to the radiation (for example microwave radiation, ultra-violet radiation, laser radiation, x-ray radiation). Radiation can cause problems with the machine function and deteriorating condition of the isolation.

***Attention!***
*If the ambient temperature drops below 15 ˚ C is required before operating the machine to have switch on hydraulic unit around 10 minutes and then made several motion few times (for example, in manual mode) by all hydraulic cylinders. The reason is to heat hydraulic oil to the operating temperature for proper function of the pressure switches (and choke).*

## 2.6. Band saw unpacking and assembling

Remove the packing from the machine and unpack all parts.

***Attention!***
*Switch off the main switch and lock it, before you start assembly! Otherwise, there is possibility of hazardous machine starting.*

If the hydraulic unit is outside the machine (the machine only connected hoses and cables), it needs to be placed and mounted on a solid basis (floors, etc.). The mounting holes are used on the bottom (bases) of the tank.

### 2.6.1. Machine installing and levelling

Check the floor supporting capacity before machine installing. If the floor capacity does not agree with requirements, you must prepare the necessary base for the machine.

**Minimal requirement:**

machine weight – Individual 520.360 DGH – 1400 kg

+ weight of accessories

+ maximum weight of material

- The machine must be levelled at the horizontal position. All feet of the machine must touch with the floor after levelling
- The machine must be levelled by means of the calibrated spirit level. Spirit level is put on the vice area. Set the roller conveyors according to the spirit level.
- For machine levelling, take care that there is sufficient available space for operation, repair work, servicing of the machine and handling the material..
- The machine including appended parts and accessories must be visible from the place of operation.

### 2.6.2. First run of the power pack

**Before the first run check:**

- The direction of the Pump, while run the power pack for max. 2seconds.
- The cooling fan of the motor has to rotate in the same direction as the arrow on the top of the motor cowling indicates.
- In case of wrong rotational direction, the electrical phase in the connection box is to be changed. This check is required after every disconnection from the power source
- Wiring matches with electrical and hydraulic diagrams
- the electric motors (pump and cooler) are properly connected and have the prescribed rotation
- the hydraulic accumulator with nitrogen gas to the specified value
- aux. elements work right (thermometer, level gauge, heater)

**First run (Attention – working pressure on securing valve is set by producer in accoring the hydraulic diagram):**

- In the short intervals activate an electric pump
- check for leaks and noise
- Bleed the hydraulic circuit
- if possible, test the circuit function with minimum load
- test the electrical equipment
- during operation monitor measuring equipment, noise, height and temperature of oil in the tank
- During this time a careful bleeding off for the whole hydraulic system is necessary. In case there is no bleeder port, the power pack will bleed itself after a while via the air breather on the tank or the return line filter.
- After multiple start-up.

### 2.6.3. Einfüllung des Hydraulikbehälters

Füllen sie den Tank mit einem der Hydrauliköle, die in der Tabelle angezeigt sind. Es handelt sich um Hydrauliköle der Klasse HM und HV nach europäischen Spezifikationen CETOP RP 91H in Viskositätklassen ISO VG32.

Die Einfüllung des Aggregats hat über geeignete Filtervorrichtung mit Filterfeinheit von 20 µm oder besser zu erfolgen!

Sollte es zum Leckage vom Öl kommen, ist es der Verunreinigung der Wasserquellen zu vermeiden. Das verschüttete Öl kann mit einem geeigneten chemischen Mittel entfernt werden (Vapex), oder mit Sägemehl oder Sand bestreut. Lagern Sie dieses aufgesaugtes Material an einer dazu bestimmten Deponie ein.

Das Hydraulikaltöl ist es in Übereinstimmung mit dem Gesetz zu entsorgen.

| Ölsorte | kinematische Viskosität v $mm^2/s$ in Abhängigkeit von der Temperatur | | | | | Gefrier-punkt |
|---|---|---|---|---|---|---|
| | 0°C | 20°C | 40°C | 60°C | 80°C | °C |
| OH-HM 32 | 220 | 100 | 32 | 15 | 7 | -40 |
| OH-HV 32 | 180 | 67 | 32 | 17 | 11 | -40 |

## 2.6.4. Verankerungsplan / Grounding plan

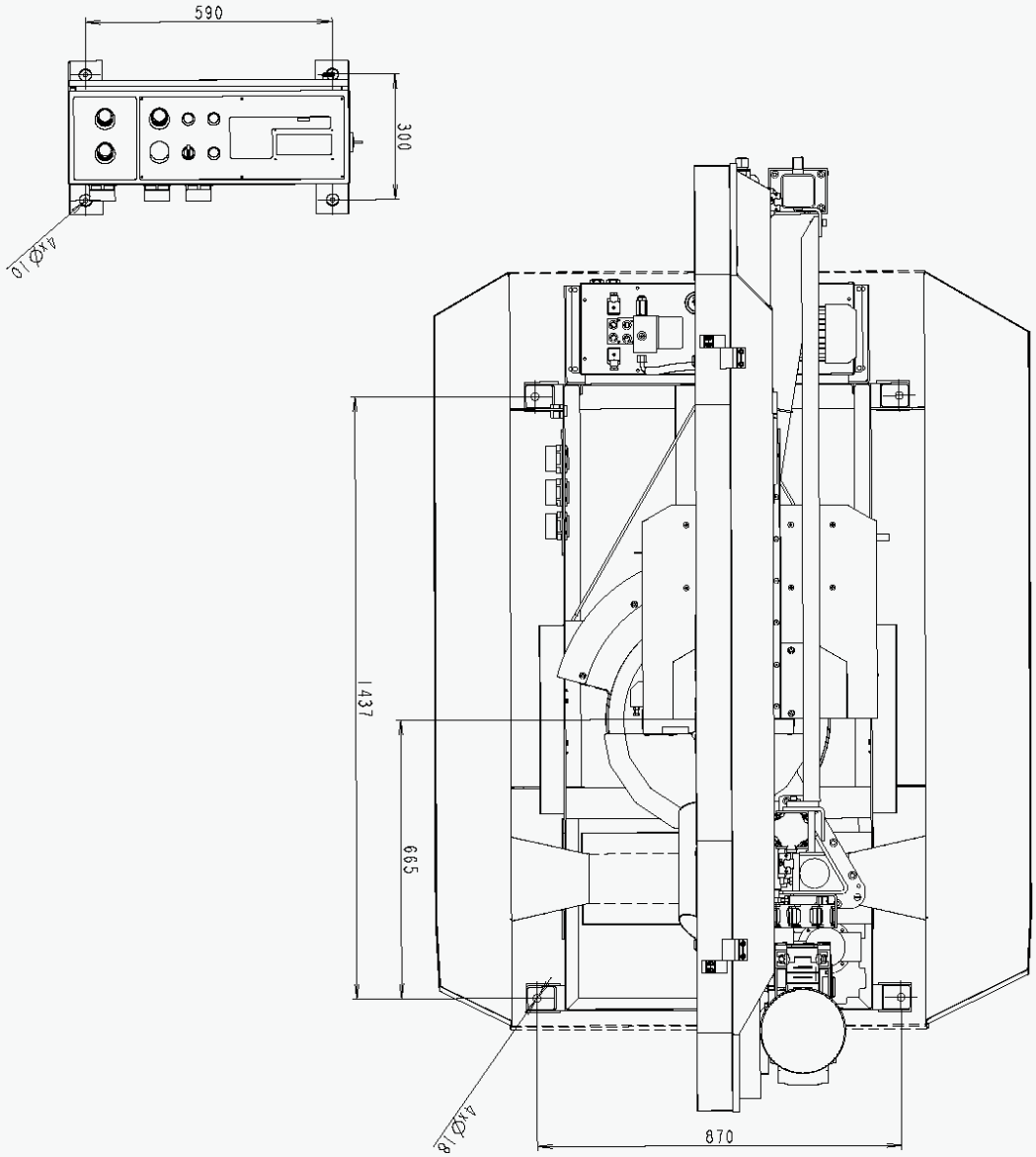


### Kotvící materiál / Verankerungsmaterial / Grouding material

- 4× Hmoždina / Dübel / Plug – ø18 mm
- Vrtáno do hloubky / In die Tiefe gebohrt / Drilled to – 120 mm
- Šrouby / Schraube / Screws – 150×M16

Šrouby podložit deskami o min. rozměrech P10×100-100
- Die Schrauben mit Platten mit Minimaldimensionen P10×100-100 unterlegen
Screew must be bottomed with plates (min. dimensions P10×100-100)

### Požadavky na rovinnost podlahy / Anforderungen an die Bodenebenheit / Requirements for floor flatness

± 10 mm / 1 m

## 2.6.5. Electrical connection

***Attention!***
***Only a qualified professional must carry out the servicing and repairs of the electric equipment!*** *Take special care during work with the electrical equipment. High voltage accident can have fatal consequences! Always follow instructions for work safety.*

**Electrical parameters of the machine:**

- Service voltage: ~ 3×400 V (230 V), TN-C/TN-C-S, 50 Hz
- Total input 5,2 kW
- Max. fuse 16 A

***Note:***
*Values of the cross section of the conductor and the rated current can be found in the regulations.*

Before connecting the machine turn off the main power switch and ensure a dry area for the connection work.

*Service voltage must agree with the line voltage!* Cross section of the supply line must respond with the rated current for max. machine load.

***Note:***
***A socket with fork can be used only for machines with the rated current less than 16 A and total input less than 3 kVA.***

In case the machine is connected directly to the electrical network terminals, an extra main switch which can be locked in zero position must be added.

***Attention!***

***In this case the extra switch on the electrical line becomes the primary switch and the main switch on the machine has only a secondary function!***

### 2.6.6. .Check the direction of the saw band

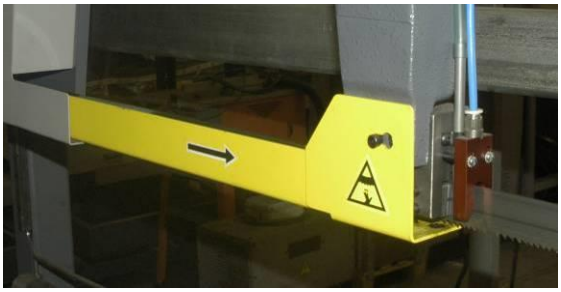

After the machine has been successfully connected, briefly switch on the machine and put the driving engine of the band in the running position. The direction must be in accordance with the arrow direction on the saw band cover. In case the direction of the saw band does not match, two phases at the terminal strip must be switched.

### 2.6.7. Check machine connection into electrical network

***Attention!***
*When you connect the machine to the electrical network secure a correct connection of all phases!*
***THE HYDRAULIC AGGREGATE ENGINE MUST NOT BE OPERATED IN REVERSED DIRECTION FOR MORE THEN 10 SECONDS!!!***

### 2.6.8. Filling of the cooling system

Prepare the mixture of the water and the cooling liquid. Keep the concentration specified by manufacturer. Shift away the cover from the drainage hole. Fill the mixture of the water and the cooling liquid to the tank of the cooling system. Area of the tank for the cooling liquid is discovered from the chapter *Technical data*.

Let the drainage hole opened and with the sieve during operation, because it secures the right work of the cooling system. Filling the tank with the cooling liquid, take care that the liquid does not drip out of the tank and the tank does not overflowed.

*Note:*
*If the machine is equipped with a Microniser, fill the Microniser with prescribed cooling liquid. This makes the Microniser ready for operation.*

## 2.7. Check machine function

Check, if the machine or some parts of the machine were not damaged during transport.

Check, if covers are installed and functional. Check by means of the Tenzomat if the saw band is correctly stretched. If it is necessary, you can stretch the saw band according to chapter *Selection and replacement of the saw band*. Values of the saw band stretching are on the Tenzomat. Switch on the main switch and check the motors and systems (saw band drive, hydraulic pump, cooling pump, chips conveyor).

Open and close the main vice. Turn the saw frame of the band saw from one outer position to other outer position. Raise the saw frame to the top position and drop the saw frame to the lowest position.

Start the machine with the cooling pump and let it run without load until the cooling system will be filled with cooling liquid. As soon as the cooling liquid starts to escape from the nozzles of the cooling system, the cooling system is ready for the operation. Carry one cycle of cutting without material. Check, if the machine runs with no irregularities. If all machine functions are right, the machine is ready for operation..

### 2.7.1. Machine disposal after lifetime

Blown out all service fluids (cooling liquid, hydraulic oil) into designated reservoir. Dismantle machine into separate parts and dispose them in accordance with valid directives

## 2.8. Saw band

Refit the saw band cover only after you have installed and tightened the saw band.

### 2.8.1. Saw band size

**4780×34×1,1 mm**

### 2.8.2. Selection of the saw band tooth system

The manufacturers provide the saw bands with constant and variable tooth system. The important factor for selection of the tooth system is length of the cutting canal with respect to the size of the product

1. *Constant tooth system* – the saw band has parallel tooth pitch all over length. This way is suitable for cutting of solid material.

***BOMAR recommended Variable tooth system for band saw.***

2. *Variable tooth system* – tooth pitch is variable. Variable tooth system is used for profiled materials and bundle cutting. Variable tooth pitch lowers vibration of the saw band, increases service life of the saw band and quality of the cutting area.

In tables, there are advised type of the tooth system depending on sizes and form of the cutting material.

**Footnotes:**

$Z_pZ$ – teeth number on one inch S – tooth with zero angle of the teeth K – tooth with positive angle of the teeth

**Examples of the tooth system marking:**

32 S – number „32" means 32 teeth on one inch (that means constant tooth system), letter „S" marks teeth with zero angle of the tooth.

4–6 K – number „4–6" means 4 till 6 teeth on one inch
(that means variable tooth system); letter „K" marks teeth with positive angle of the teeth.

### 2.8.3. Saw band running-in

**Running-in:** Cut the material with the frame lowering reduced to 50% only. When vibrations occur increase or decrease the band speed.

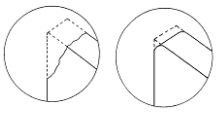

When cutting small pieces run the band until approximately 300 $cm^2$ of material has been cut. When cutting large pieces run the band for 15 minutes approximately. When the band has been run, increase the lowering-speed to normal speed. The running in of the saw band avoids micro-breaks on the cutting edges of new saw band ensuing from first excessive stress. This would decrease service life substantially. The optimal running in of the saw band produces ideal rounded cutting edges and therefore the conditions for an optimal service life.

***Note:** Run regrinding saw bands too.*

## 2.8.4. Tables for teeth selection

**SHAPED MATERIAL ($D_p$, S = mm)**

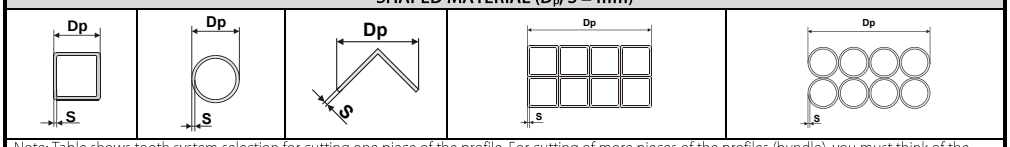


Note: Table shows tooth system selection for cutting one piece of the profile. For cutting of more pieces of the profiles (bundle), you must think of the size of the wall as double size of the wall of one profile (that means, size „S" equates to 2×S). In table, there are tooth systems constant and variable.

| Size of the wall S [mm] | Tooth system ($Z_pZ$) Outer diameter of the profile $D_p$ [mm] | | | | | |
|---|---|---|---|---|---|---|
| | 20 | 40 | 60 | 80 | 100 | 120 |
| 2 | 32 S | 24 S | 18 S | 18 S | 14 S | 14 S |
| 3 | 24 S | 18 S | 14 S | 14 S | 10–14 S | 10–14 S |
| 4 | 24 S | 14 S | 10–14 S | 10–14 S | 8–12 S | 8–12 S |
| 5 | 18 S | 10–14 S | 10–14 S | 8–12 S | 6–10 S | 6–10 S |
| 6 | 18 S | 10–14 S | 8–12 S | 8–12 S | 6–10 S | 6–10 S |
| 8 | 14 S | 8–12 S | 6–10 S | 6–10 S | 5–8 S | 5–8 S |
| 10 | - | 6–10 S | 6–10 S | 5–8 S | 5–8 S | 5–8 S |
| 12 | - | 6–10 S | 5–8 S | 5–8 S | 4–6 K | 4–6 K |
| 15 | - | 5–8 S | 5–8 S | 4–6 K | 4–6 K | 4–6 K |
| 20 | - | - | 4–6 K | 4–6 K | 4–6 K | 3–4 K |
| 30 | - | - | - | 3–4 K | 3–4 K | 3–4 K |
| 50 | - | - | - | - | - | 3–4 K |

| Size of the wall S [mm] | Tooth system ($Z_pZ$) Outer diameter of the profile $D_p$ [mm] | | | | | |
|---|---|---|---|---|---|---|
| | 150 | 200 | 300 | 500 | 750 | 1000 |
| 2 | 10–14 S | 10–14 S | 8–12 S | 6–10 S | 5–8 S | 5–8 S |
| 3 | 8–12 S | 8–12 S | 6–10 S | 5–8 S | 4–6 K | 4–6 K |
| 4 | 6–10 S | 6–10 S | 5–8 S | 4–6 K | 4–6 K | 4–6 K |
| 5 | 6–10 S | 5–8 S | 4–6 K | 4–6 K | 4–6 K | 3–4 K |
| 6 | 5–8 S | 5–8 S | 4–6 K | 4–6 K | 3–4 K | 3–4 K |
| 8 | 5–8 S | 4–6 K | 4–6 K | 3–4 K | 3–4 K | 3–4 K |
| 10 | 4–6 K | 4–6 K | 4–6 K | 3–4 K | 3–4 K | 2–3 K |
| 12 | 4–6 K | 4–6 K | 3–4 K | 3–4 K | 2–3 K | 2–3 K |
| 15 | 4–6 K | 3–4 K | 3–4 K | 2–3 K | 2–3 K | 2–3 K |
| 20 | 3–4 K | 3–4 K | 2–3 K | 2–3 K | 2–3 K | 2–3 K |
| 30 | 3–4 K | 2–3 K | 2–3 K | 2–3 K | 1,4–2 K | 1,4–2 K |
| 50 | 2–3 K | 2–3 K | 2–3 K | 1,4–2 K | 1,4–2 K | 1,4–2 K |
| 75 | - | 2–3 K | 1,4–2 K | 1,4–2 K | 1,4–2 K | 0,75–1,25 K |
| 100 | - | - | 1,4–2 K | 0,75–1,25 K | 0,75–1,25 K | 0,75–1,25 K |
| 150 | - | - | - | 0,75–1,25 K | 0,75–1,25 K | 0,75–1,25 K |
| 200 | - | - | - | 0,75–1,25 K | 0,75–1,25 K | 0,75–1,25 K |

**SOLID MATERIAL (D = mm)**

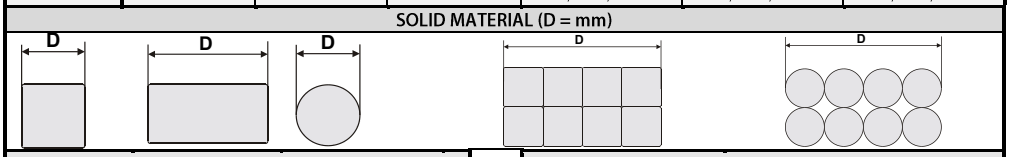


| Constant tooth system | |
|---|---|
| length of the cut D | tooth system ($Z_pZ$) |
| to 3 mm | 32 |
| to 6 mm | 24 |
| to 10 mm | 18 |
| to 15 mm | 14 |
| 15–30 mm | 10 |
| 30–50 mm | 8 |
| 50–80 mm | 6 |
| 80–120 mm | 4 |
| 120–200 mm | 3 |
| 200–400 mm | 2 |
| 300–800 mm | 1,25 |
| 700–3000 mm | 0,75 |

| Variable tooth system | |
|---|---|
| length of the cut D | tooth system ($Z_pZ$) |
| to 30 mm | 10 –14 |
| 20–50 mm | 8–12 |
| 25–60 mm | 6–10 |
| 35–80 mm | 5–8 |
| 50–100 mm | 4–6 |
| 70–120 mm | 4–5 |
| 80–150 mm | 3–4 |
| 120–350 mm | 2–3 |
| 250–600 mm | 1,4–2 |
| 500–3000 mm | 0,75–1,25 |

In spite of the proposals above, consider your supplier's recommendations and ask him for professional advice even though the manufacturers will often recommend their own saw bands.

# 3. Ovládání stroje/ Bedienung der Maschine/ Machine control

## 3.1. Starting the band saw

» 1. Switch on the main switch of the band saw. The main switch is situated on the side of the switchboard.

2. After a few initialization screens the screen appears with information that the safety circuit isn´t switched on.

3. Switch on the safety circuit of the band saw **Safety circuit** (button **2**) on control panel of the band saw.

## 3.2. Control panel

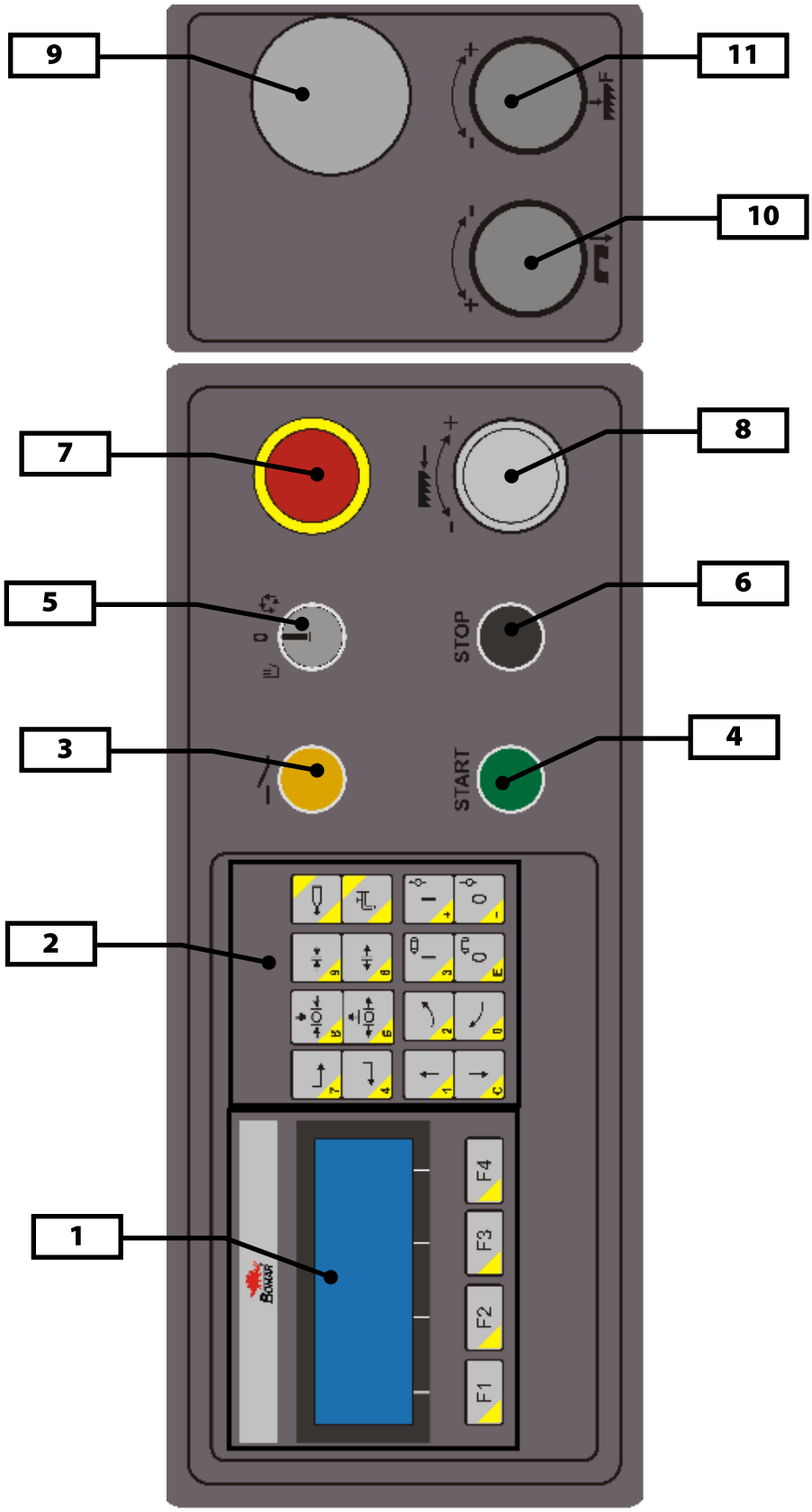

### 3.2.1. Control panel description

| | |
|---|---|
| 1 | **LCD Display**<br>Onto display are described all runnind processes, control with functional buttons **F1-F4** |
| 2 | **Control buttons / numeric keypad** |
| 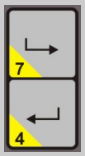 | **GH version – no function**<br>**DGH version – vice movement right/left** |
| | **Clamp / release vice clamp** |
| | **Clamp / release vice**<br>In manual cycle pressing and holding the button allows you to release pressure or clamping vise.<br>. |
| | **Cooling system selection**<br>Cooling with Microniser (optional cccessories)<br>Cooling with water cooling pump runs even when the saw band drive isswitch off. |
| 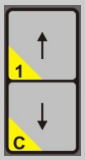 | **Movement of the arm**<br>Pressing and holding a button or trigger arm lifts the lifting hydraulic cylinder. When lifting the arm using the arm can be lifted in its entirety lifting cylinder.<br>On the down can be activated by simultaneously pressing the **rapid move** functional button F1. |
| | **No function** |
| | **Turn on / off the band drive**<br>In manual mode the button is displayed "I" switched band drive, the button with the symbol "0" switch off |
| 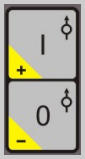 | **Turn on / off the hydraulic circuit**<br>Button with the symbol "I" turns the hydraulic circuit, the button with the symbol "0" disables the hydraulic circuit. The hydraulic circuit is automatically switched on when needed. |
| 3 | **Safety circuit**<br>Switch on the safety circuit by pressing button. |
| 4 | **Button START - Switch on the semi-automatic cycle**<br>After pressing the button will start the cutting cycle |

| | |
|---|---|
| 5 | **Selecting a mode machines**<br>0 for servicing and settings<br>manual mode<br>semi-automatic mode<br><br>**Note**: The functions performed in both manual and semi-automatic mode are the same, but only in semi-automatic cycle it is possible to use the START / STOP (ie start / off cycle) |
| 6 | **Button STOP - Switch off on the semi-automatic cycle**<br>After pressing the button will turn off the interruption or of cutting cycle |
| 7 | **TOTAL – STOP button**<br>In emergency causes the machine must be immediately switched off. |
| 8 | **Frequency convertor**<br>Turn to change the speed of the saw band in the range of 20-120 m / min |
| 9 | **Cutting pressure manometer**<br>Pointer to cut pressure adjustment |
| 10 | **Cutting pressure regulation**<br>Adjust the arm pressure to the cut.<br><br>**Notice:** If you keep closing the throttle valve too tightly, the valve seat may wear off which causes its leakage. Therefore, close the valve always gently. |
| 11 | **Governing valve for adjust the spped of the arm sinking to the cut**<br>Adjust the speed of the arm sinking to the cut by governing valve.<br><br>**Notice:** If you keep closing the throttle valve too tightly, the valve seat may wear off which causes its leakage. Therefore, close the valve always gently. |

## 3.3. Machine referencing

**After switching on, the machine must always be referenced!**

Unless referencing has been done, semiautomatic cycle cannot be started and it is impossible to turn the arm and move the table in the manual mode.

Movements necessary to release the band from cut and material from the vice (vertical arm travel, vice jaws movement and bundler jaws movement) can be controlled in the manual mode even without referencing.

**Provedení referenční sekvence:**

1. Choose the position on the mode selector.

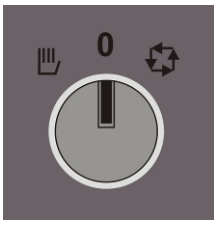


Na displeji se zobrazí následující obrazovka:

2. .**Push and hold the START button** (position 4 on the control panel), thus the machine referencing is started.

**Referencing process:**

Referencing is setting of the machine in the basic reference position. Referencing is always required after switching on the main switch; the movement sequence during referencing is always the same. If a referencing step is not observed, the machine stops and does not continue with referencing until the previous step has been fulfilled.

Referencing of the Topline machines is executed in a sequence of 4 (5) successive steps. Within each step, one specific movable unit of the machine is set to the basic position and this setting is the start-up condition of referencing movement of the next unit. Setting of the last unit to the basic position is the condition of the end of referencing.

Achievement of basic position of the pertinent unit is detected by the limit switch or inductive switch; at the same time, fulfilment of the referencing condition is indicated by the pertinent cross on the control panel display.

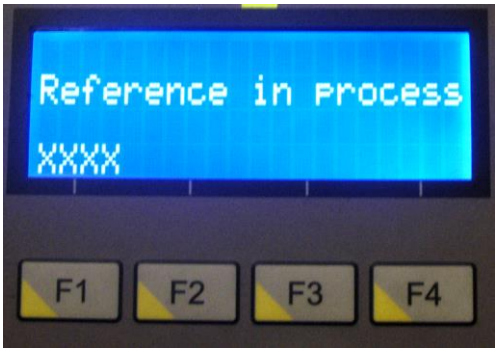


If four crosses are lit (or five crosses - for machines equipped with a bundler), successful end of referencing is indicated.

If the referencing sequence is interrupted before its end, check the pertinent switch/sensor of the basic position of the unit before the step of which the sequence stopped, and its counterpart. If necessary, replace/adjust the damaged part according to the chapter "Adjustment and maintenance".

| Referencing process | Display indication | Referencing condition | Switch location |
|---|---|---|---|
| **Step 1** | **X** | **Arm in upper position** | Limit switch of upper arm position |
| **Step 2** | **XX** | **Bundler fully open** (optional equipment) | Inductive sensor of full opening of the bundlere 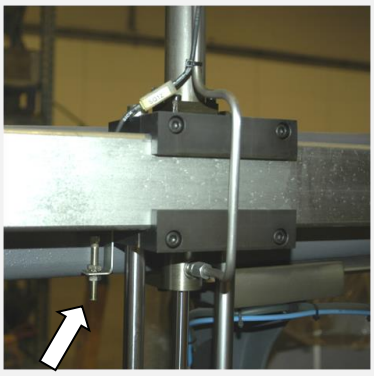 |

| Referencing process | Display indication | Referencing condition | Switch location |
|---|---|---|---|
| **Step 3** | **XXX** | **Vice fully open** | Limit switch of full opening of the vice 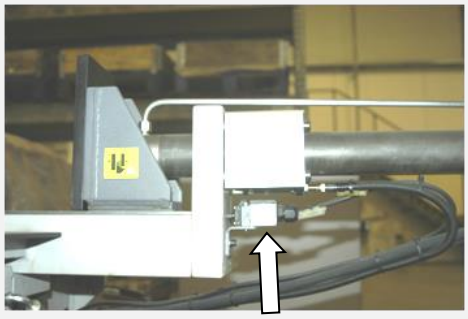 |
| **Step 4** | **XXXX** | **Table position on the left** (from operator's perspective) **Caution! This referencing movement is only executed by the Topline DGH version with automatic swivelling of the angle!** | Inductive sensor of the table located on the left 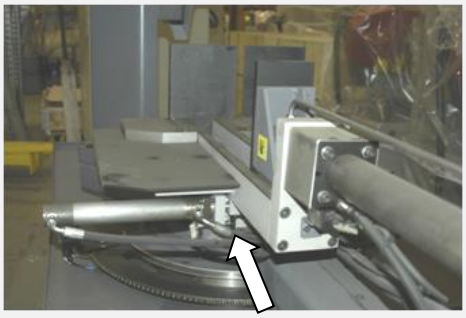 |

| Referencing process | Display indication | Referencing condition | Switch location |
|---|---|---|---|
| **Step 5** | **XXXXX** | **Arm position at angle of 0°**<br>Note:<br>During referencing, the arm starts moving in slow, smooth move to the right (from operator's perspective) and is rotating until the reference limit switch is closed. After closing, the arm quickly returns to the preset angle 0° - by this last sequence, referencing is finished, the machine has been REFERENCED.<br>**Caution! This referencing movement is only executed by the Topline DGH version with automatic angle swivelling!!** | <br>Referencing limit switch of the arm position<br> 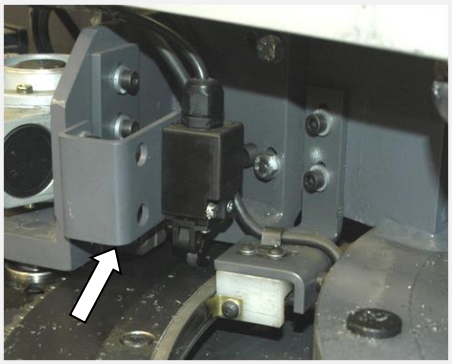 <br>ELGO sensor for angle measurement<br> 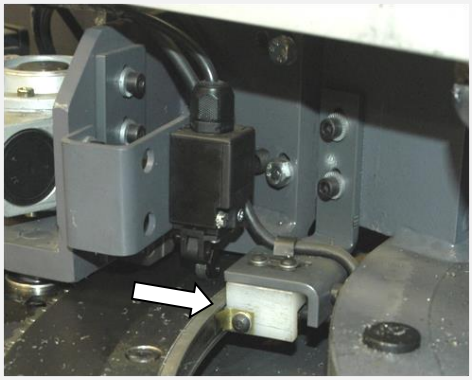 |

3. At the end of successful referencing, a screen appears with the message, that referencing has been completed

4. Release the **START** button.

   Information on referencing completion disappears and the machine is ready to start the semiautomatic cycle.

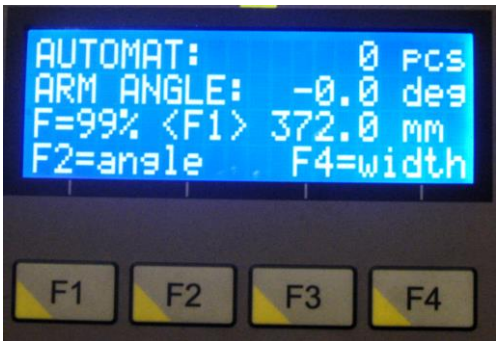

## 3.4. Control of the machine Topline 510.350 DGH

### 3.4.1. Semi-automatic cycle

1. Lift the saw arm to the top position by pressing button 1.
2. Open the vice by pressing button 6.
3. Clamp material to the vice by pressing button 9.
4. Lower the frame about ***10 mm above the material*** by button c.

> ***Attention!***
> *Do not move the saw frame to the material, when the saw band driving is not running! Do not move the saw frame to the material with accelerated motion! The saw band can be damaged!*

5. Select the max. height of the arm with limit switch.

You can clear the register of the performed cycles by button F3 and stop on 5 seconds.

6. Press button **START** (position **4**) of semi-automatic cycle.

Set the saw band speed according to the kind of the cutting material.

Set the speed of the arm sinking by adjust governing valve (position **10**).

> ***Attention!***
> *Press button „5" (STOP of semi-automatic cycle). In risk of injury or damage of the band saw, press the emergency button TOTAL STOP "10"!*

7. The band saw clamps the material to the vice and it makes the cut.
8. Open the vice. If the vice is not opened, you can open it by button 6. Remove the blank ((cut off a piece of material).
9. You can repeat whole process.

## 3.5. Control of the machine Topline 510.350 DGH with automatic swivel of the arm angle

### 3.5.1. Manual control

1 Choose the position on the mode selector.

The screen appears for control of the machine in the manual mode.

The screen shows information on the current state of the machine

In this mode, you can control the individual machine movements with the buttons on the machine control panel.

### 3.5.2. Semiautomatic mode

1 Choose the position on the mode selector.

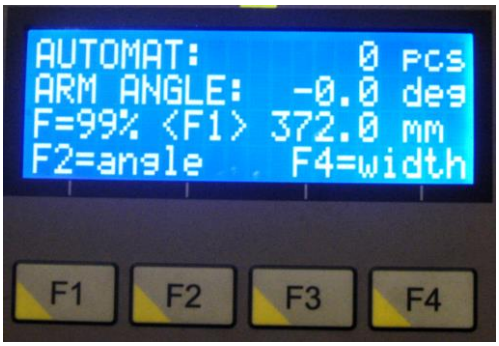


2 Before starting the semiautomatic cycle, you must set the **swivel angle of the arm:**

a) Push the **F2** button to set the angle.

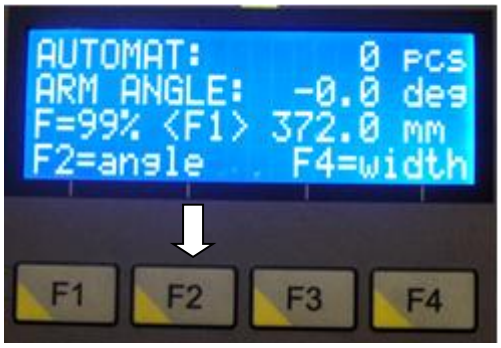

b) Enter the angle value by means of the keyboard.

c) By means of the F1 button, change the sign (+/-).

d) Confirm by pushing the F4 button (OK)

e) The **Press START** prompt appears on then screen and the START button starts flashing

Note::

F1 <ESC> - return to previous screen

f) Push the **START** buttonT

Hold the **START** button until the saw sets at the required angle and a screen appears on the display with the information that the angle has been set

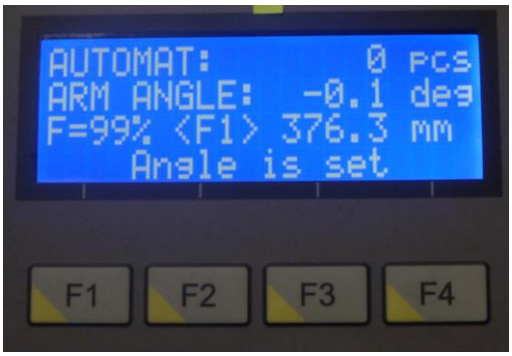


3 Then set the **arm height:**

a) Set the arm height by means of ↑ and ↓.

> *Caution!*
> *Do not lower the saw arm to the material unless the saw band drive is on! Do not lower the saw arm to the material with fast feed! The saw band might be damaged!*

b) Save the value by pushing the function button **F1.**

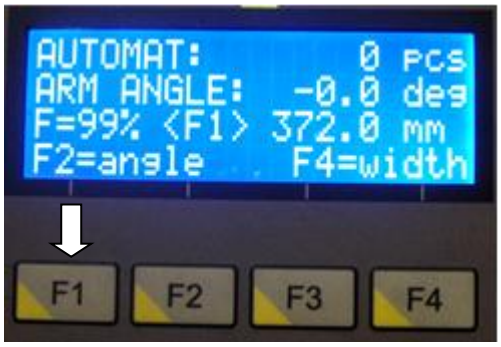


4 Push the function button **F4** to enter the **material width** (the final cut depth will be calculated).

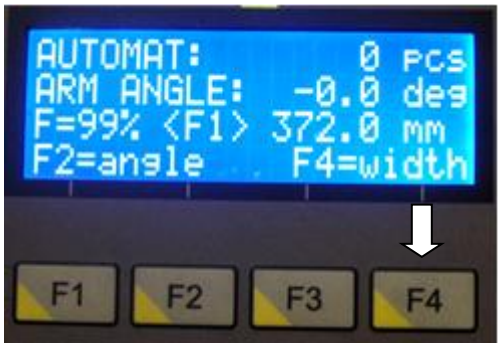

a) Enter the material width by means of the keyboard

b) Confirm by pushing the F4 button (OK).

5 Push the START button to start the semiautomatic cycle.

### 3.5.3. Cycle breaking

» 
- **STOP button**

  Semi-automatic cycle is interrupted by pressing button **STOP** (position **6**) of the semi-automatic cycle.

  The arm is lifted to the top position and the saw band drive is stopped..

  By pressing button ***START*** (position **4**) of the semi-automatic cycle, you can start the cycle.

- **TOTAL STOP button**

  In case of the risk, press button **TOTAL STOP** (position **7**).

  After pressing **TOTAL STOP** button, saw band drive is immediately broken and the arm sinking is stopped.

- **Reactivation**

  1. Turn button **TOTAL STOP** according to the arrows (on the button).
  2. Switch on the **Safety circuit** by button (position **3**).
  3. By pressing button **START** (position **4**) of the semi-automatic cycle), you can start the cycle. The arm is lifted to the top position and the saw band starts the cycle.

## 3.6. Machine setup

Machine setup mode is activated by switch on control panel. Switch must be in **"0"** position.

After swiching into position "0" is displayed on LCD this screen.

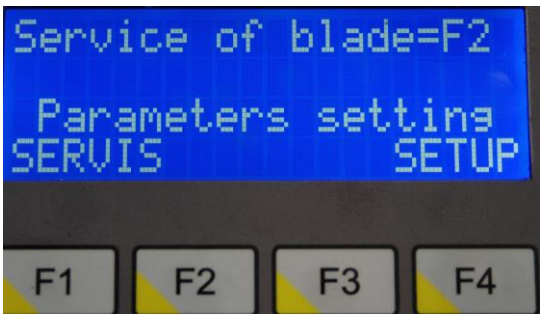


**Note:**

Selection „Service of blade" – without function

### 3.6.1. SERVICE

After pressing the **F1** functional key can be set servis parameters that are password protected (947).

Control and movement in SERVIS can be set using the function keys **F1 - F4.**

| On display | Descriptiom |
|---|---|
| | **Deviation of reference**<br>• Reference switch deviation from the zero angle of the saw<br>• **F1** <ESC> go back, **F4** next menu screen,<br>**F2** <OK> - enter value |
| | **Number of pulses per degree**<br>• Number of pulses of the ELGO band per 1 degree<br>• **F1** go back, **F4** next menu screen,<br>**F2** <OK> - enter value |
| | **Vice clamping time**<br>• Watch vice clamping time in ms.<br>• **F1** go back, **F4** next menu screen,<br>**F2** <OK> - enter value |

**Blade speed correction**

- Constant for calculation of the band speed value displayed from the analog input.
- **F1** go back, **F4** next menu screen, **F2** <OK> - enter value

**Max. arm positoin**

- Arm height after machine referencing
- **F1** go back, **F4** next menu screen, **F2** <OK> - enter value

- **F1** go back, **F4** next menu screen,

- **F1** go back, **F4** next menu screen,

### 3.6.2. SETUP

After pressing the **F4** functional key can be set setup parameters that are not password protected.

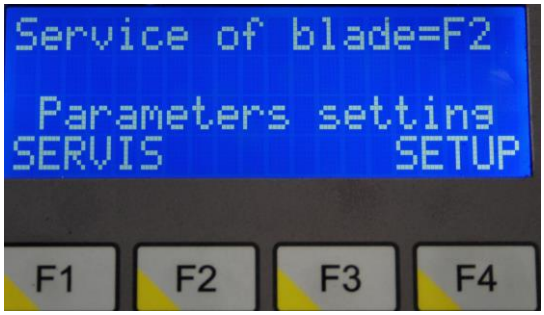


Control and movement in SETUP can be set using the function keys **F1 - F4.**

| On display | Description |
|---|---|
| | **Finish of cycle**<br>• At the top – arm after cut starts above the material and cutting cycle ends<br>• Athe the bottom – arm after cut remains in the lower position, the above material does not exit<br>• **F1** <ESC> go back, **F4** next menu screen,<br>**F2** – change of selection |
| | **Turn off motor after cut**<br>• Up position – saw arm move up after cut and then turn off drive of saw blade.<br>• Down position – drive of saw band turn off immediately after cut.<br>• **F1** <ESC> go back, **F4** next menu screen,<br>**F2** – change of selection |
| | **Upper vice**<br>• Allows to able / disable the upper vice in the cutting process<br>• **F1** <ESC> go back, **F4** next menu screen,<br>**F2** – change of selection |
| | **Vice opening time**<br>• Watch vice opening time in ms.<br>• **F1** go back, **F4** next menu screen,<br>**F2** <OK> - enter value |

**Upper vice opening time**

- Watch upper vice opening time in ms.
- **F1** go back, **F4** next menu screen, **F2** <OK> - enter value

**Switch off hydraulic**

- Setting the hydraulic unit off when idle machines
- **F1** go back, **F4** next menu screen, **F2** <OK> - enter value

**Language**

- Choose menu language
- **F1** <ESC> go back, **F4** next menu screen, **F2** – change of selection

Pushing F4 on the last screen – return to the home screen for setting the machine and service parameters:

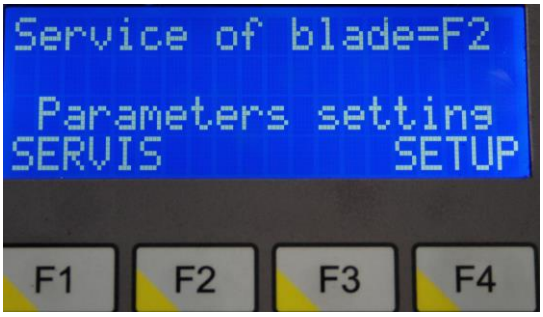

### 3.6.3. Machine error messages

| Error | Information |
|---|---|
| SAFETY BUTTON is OFF<br>F1 F2 F3 F4 | Saffety button (pos. 2 on kontrol panel) is not ON.<br>Press **F4** to confirm error. |
| TOTALSTOP pressed<br>F1 F2 F3 F4 | Total Stop button is active. Turn button **TOTAL STOP** according to the arrows.<br>Press **F4** to confirm error. |
| Blade tension faulty<br>F1 F2 F3 F4 | Saw blade in properly tensioned.<br>Press **F4** to confirm error. |
| Faulty motor protec.<br>F1 F2 F3 F4 | Engine temperature protection is active.<br>**Do not overload saw!**<br>Press **F4** to confirm error. |

## 3.7. Band saw adjusting

### 3.7.1. Angular cut setting

The machine enables angular cuts from 45°to -60° The cut angle can be set fluently from **0°** to **60°** on the left side and from **0°** to **45 on the right side.**

1. Release securing lever of the console.

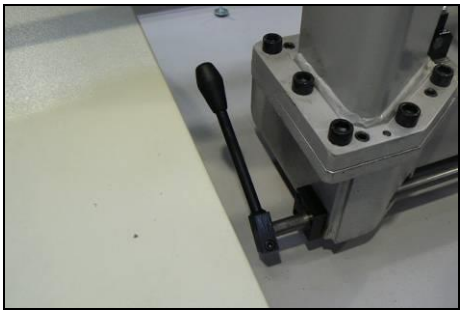

2. Swivel the frame to the desired angle by pulling the saw arm. Angle is shown on scale (see arrow

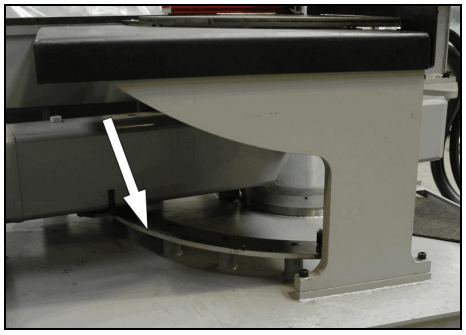

3. After cutting angle setup tighten securing lever.

***Attention!***
*Moving parts of the vice must be moved when saw arm has zero angle of rotation and closed vice jaws.*
*Moving vice jaw of vice must be in endmost position otherwise there is a danger of collision saw arm with vice.*

### 3.7.2. Laserliner – optional accessory

The device is used to ascertain exact position of the material cut before cutting.

The cut is indicated by the laser beam projected on the surface of the prepared material..

The switch for Laserliner is located on the  control board.

### 3.7.3. Saw frame lift stop setting – just for Topline 510.350 DGH

If you want to shorten the time of operations in automatic cycle, you have to adjust the height of the saw arm according to the height of the cutting material.

***Notice:***
*Arm Position  is monitored by a limit switch. If the limit switch lever hits the bar and goes, then you can not run a semi-automatic cycle.*

1. Height adjustment is sensed by a limit switch
2. Press button and lift the saw arm to the upper position.
3. Insert a material into the vice. Carefully lower the saw arm button to the material.
4. Stop the saw arm 10mm above the material.
5. The lift stop setting is sensed by the limit switch

   Set the stop just above arm height sensor - slide stop turning the locking knob close to the limit switch

### 3.7.4. Adjusting band guides

If you want to achieve a smooth and precise cut, it is helpful to position the guide cube as close as possible to the material.

1. Press button ***STOP*** (pozice **6)** to switch off the hydraulics and stop on 2 second.
2. Release the stopping lever of the listel (see picture).
3. Move the left part of the guide apparatus so that the left guide cube edge is as close to the cut material as possible.
4. Tighten the lever of the gib and check the guide cube setting for possible collision with binding table or vice jaw.

### 3.7.5. Cutting speed adjusting

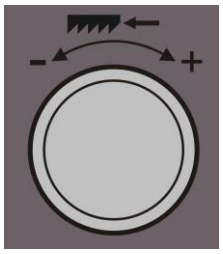


Speed of the saw band is possible change from ***20 to 120 m/min***. You can effect to adjusting speed of the saw band following.

Use the frequency convertor by button ***8*** (position on control panel) to adjust requested speed of the saw band. You can see the speed on display. Band speed is displayed on the screen **1** (position on control panel) during one semi-automatic cycle.

### 3.7.6. Adjustment of pressure to the cut

The band saw ***Individual 520.360 DGH*** is equipped with cutting pressure regulation on the both guiding cubes.

Pressure adjusting is performed with governing valve **9** (position on control panel).

***Lower pressure to the cut*** – turn the wheel against the clock's direction.

**Higher pressure to the cut** – turn the wheel to the clock's direction.

### 3.7.7. Speed adjustment of the arm lowering

Set the speed of the arm lowering to the cut by control valve for Cutting pressure regulation **10** (position on control panel).

- Set the lower speed of the arm lowering to the cut by turning the switch clockwise.
- Set the higher speed of the arm lowering to the cut by turning the switch anti-clockwise.

***Notice:***
*If you keep closing the throttle valve too tightly, the valve seat may wear off which causes its leakage. Therefore, close the valve always gently.*

### 3.7.8. Brush setting

The brush influence the cutting power, lifetime of the saw band, circular wheels, hardmetal guides and precision of the cutting. Replace the brush each shift**.**

**Check the brush adjustment every shift.**

1. Dismantle the brush cover.

2. Set the brush position to the saw band by rotating the adjusting screw (see the arrow).

The brush must touch the saw band toothing.

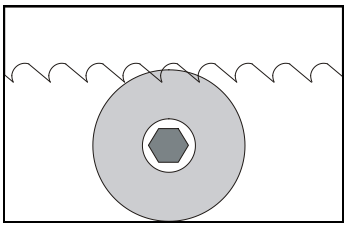

***Caution!***
***The brush must not reach the bottom of the saw toothing!***

3. If the brush does not rotate correctly (the brush drive wheel is slipping on the drive wheel of the saw band), use the screws to push (see the arrows) the brush drive wheel to the saw band drive wheel.

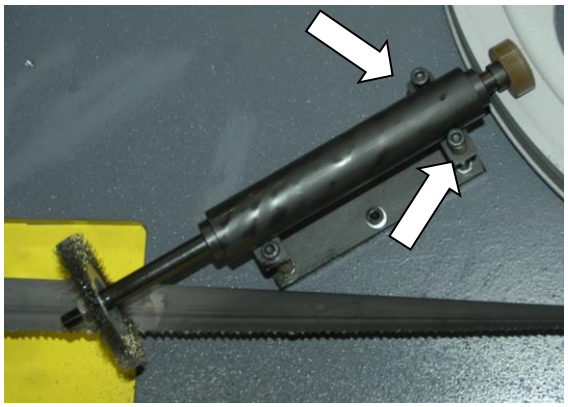

***Attention!***
*Do not overtighten the screws so that the brush drive wheel is not damaged or service life of the band drive wheel bearings reduced!*

### 3.7.9. Halogen lighing of working area (optional accessory)

Light the working area of the machine with natural light and helps to facilitate cutting with a band saw.

Proper lighting in your work area greatly enhances ergonomics machines.

Thanks flexible arm halogen light can accurately adjust to the desired location.

Turn on and off light switch is made directly to the halogen light.

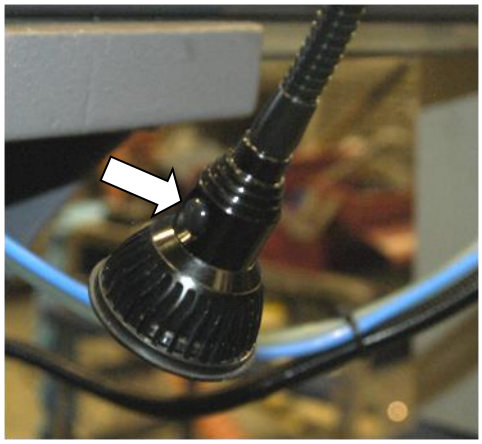

Design lighting unit meets IP54 - Protection against water jets.

***Technical data:***

| | |
|---|---|
| Supply voltage | 230 V |
| Lenght flexible arm | 300 mm |
| average | Ø 5,5 mm |
| lenght | 80 mm |

## 3.8. Material insertion

- Never walk under a suspended load!
- Never climb onto the gravity-roller conveyor!
- Do not hold the material for clamping material to the vice! The vice can cause injury!

### 3.8.1. Handling agent selection

- Use the strong handling agents to lift and transfer the material!
- Handle with the material only with the lift truck or use the suspension strands and the crane!
- Do not use the lift truck or crane in case that you do not have the license to handle with it!

### 3.8.2. Insertion

Insert material to the vice and ensure that the material cannot move in the vice or fall from the vice after the clamping. If you cut long pieces of the material (for example rod, tube), you must use the roller conveyors for material shifting to the band saw. Contact Bomar for more information about roller conveyors

Make sure the conveyor is long enough and the material cannot tip off the conveyor.

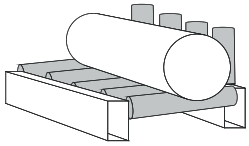

Be especially careful with round materials that it always stays on two vertical rollers and that it cannot fall off the conveyor!

### 3.8.3. Bundle material cutting

If you want to cut the material in the bundle, there are suggestions for the positioning of bundles

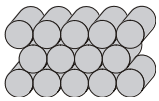

*Round material bundle:* Take care especially with round material that the bars are put according to the picture. If the bars are put differently, you may have problems with movement.

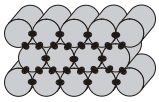

Always weld the material at the rear end of the bundle to secure it from moving.

Before welding always, switch the machine off at the main switch! The magnetic fields, which often occur during welding, may damage the controls!

*Square material bundle:*

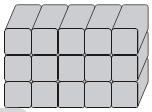

***Attention:***
*Not all material shapes are suitable for bundle cuts. Keep the recommendation of your supplier of the saw bands for material insertion to the bundle.*

# 4. Údržba stroje/ Wartung/ Machine service

## 4.1. Saw band dismantling

When dismounting the saw band, take care not to damage the limit switch of the saw band tightening!

1. Lift the saw arm to maximum position.

2. Switch off the machine and open the front cover of the saw band.

3. Dismantle the yellow protective covers of the band. Covers are fastened by screws

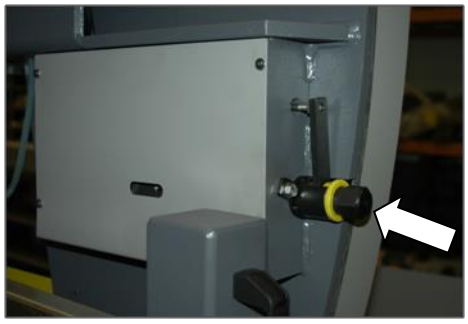

4. Turn by stretching star to the left side, release saw band stretching and pull down the saw band from the wheels.

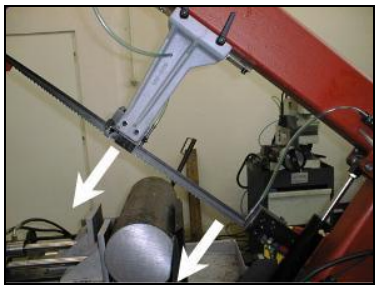

5. Pull up the saw band from the guiding cubes.

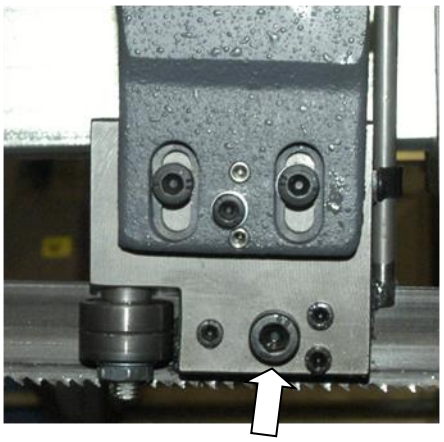

6. To facilitate removal of the saw band from the guide cubes, tighten the adjusting screws of the hard metal guides on the guide cubes to release the saw band from the hard metal guides.

7. Prior to installation of the saw band, clean all track wheels, guide cubes and inner side of the arm thoroughly of all traces of chips and dirt. Keep in mind the teeth direction when installing the saw band.

## 4.2. Saw band installation

When installation of the saw band, take care not to damage the limit switch of the saw band tightening

1. Lift the saw arm to maximum position.

2. Switch off the machine and open the front cover of the saw band.

3. Insert new saw band in the guide cubes. Make sure the saw band runs between both guide rollers and it is pushed all the way to the top.

4. Put the saw band on both guide wheels. Make sure that the saw band ridge fits tightly to the wheel rim. Then push the saw band as far back as possible.

8.

5. Stretch the saw band by means of the screw, that the band did not falls from wheels. Now you can remove the plastic cover from the saw band teeth.

9.

6. Mount the yellow protective guards of the band. The guard arrow must correspond to the direction of the band arrow. If not, turn it.

10.

7. Close the front cover of the saw arm..

8. Adjust the hard metal guides – for the procedure, see the chapter on adjustment of the hard metal guides on the machine.

## 4.3. Saw band stretching and inspection

Right saw band stretching is one of the most important criteria's, which influents accuracy and saw band service life. Stretch the saw bands according to the selected saw band and the band saw. Keep the recommendation of your manufacturer.

| Pilový pás<br>Sägeband<br>Saw band | Napětí pilového pásu<br>Sägebandspannung<br>Blade tension | Napětí pilového pásu PSI (pro Tenzomat)<br>Sägebandspannung PSI (für Tenzomat)<br>Blade tension PSI (for Tenzomat) |
|---|---|---|
| 20 x 0,9 mm | 160 $N.mm^{-2}$ | 23 500 |
| 27 x 0,9 mm | 180 $N.mm^{-2}$ | 26 500 |
| 34 x 1,1 mm | 210 $N.mm^{-2}$ | 30 500 |
| 41 x 1,3 mm | 240 $N.mm^{-2}$ | 35 000 |
| 54 x 1,3 mm | 240 $N.mm^{-2}$ | 35 000 |
| 54 x 1,6 mm | 280 $N.mm^{-2}$ | 40 600 |
| 67 x 1,6 mm | 290 $N.mm^{-2}$ | 42 000 |
| 80 x 1,6 mm | 300 $N.mm^{-2}$ | 43 500 |

1. After mounting, tighten the saw band slightly to that it cannot fall from the wheels.
2. Mount Tenzomat on the saw band and lock it with screws.

3. Tighten the saw band until it is tightened to the required value.

11. If a hydraulic pressure gauge is installed for measuring of the band tightening (optimal accessory), switch on the hydraulic unit after mounting the saw band and check the pressure of the saw band tightening on the pressure gauge.
12. If the saw band is tightened correctly, the pressure gauge pointer is on the green arrow in the scale.

## 4.4. Adjusting of the saw band run

Saw band run on the stretching wheel must be regularly inspected. The inspection has to follow every saw band replacement.

### 4.4.1. Saw band run inspection

**If the run is not correct, the following problems may occur:**

- **The saw band falls off the wheel** – the saw band and protective cover can be damaged.
- **The saw band runs on the wheel rim** – The saw band and wheel rim can be damaged

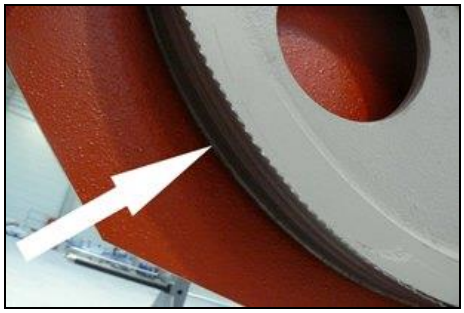

1. Start and stop saw band drive.
2. Stop the main switch!.
3. Open rear cover of the saw frame.

4. Check saw band placing on the wheels.

- If the distance of the rear part of the saw band from wheel rim is **1 mm**, setting is right.
- If the distance is bigger than **1 mm**, or the saw band runs on the wheel rim, saw band run must be set.

5. When the check is finished install and close all covers.

### 4.4.2. Saw band run setting

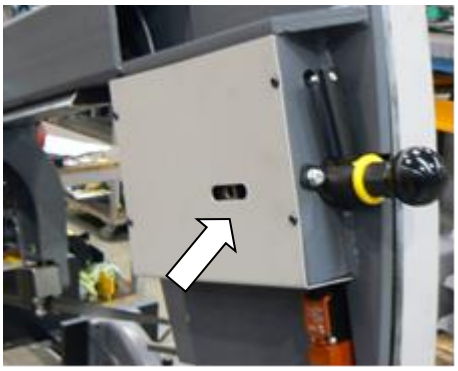

Saw band run is set with screw (arrow) in the stretching cube on the saw arm. Right distance rear part of the saw band from wheel rim is **1 – 3 mm**.

Turn with the screw to the right, the saw band is closer to the stretching wheel rim.

Turn with the screw to the left, the saw band is far from the stretching wheel rim

Check saw band run adjustment again.

## 4.5. Saw frame lower position stop adjustment

The lower stop limits the lowest position of the saw frame. This stop has to be checked at least once a month. If the lower stop is adjusted incorrectly, the loading surface of the table can be cut too deeply or the material will not be cut through completely.

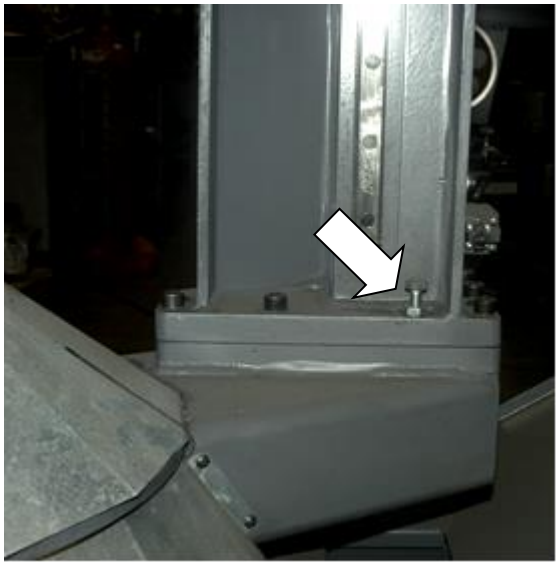

1. Raise the saw frame to the upper position
2. Release the nut of the adjusting screw and adjust the stop
3. Fasten the adjusting screw with the nut again
4. Set the limit switch of the lower arm position

## 4.6. Check and adjustment of switches and sensors

***Warning!***
***All sensors, particularly those effecting the reference function, MUST regularly be checked, kept clean, or adjusted. Damage to these sensors, their incorrect position or contamination may result in MALFUNCTION of the machine!***

### 4.6.1. Setting of the limit switch monitoring the band tightening

It is necessary to check the setting of the limit switch for band tightening monitoring at every band exchange. If the limit switch is not adjusted correctly, the band is tightened too little or too much.

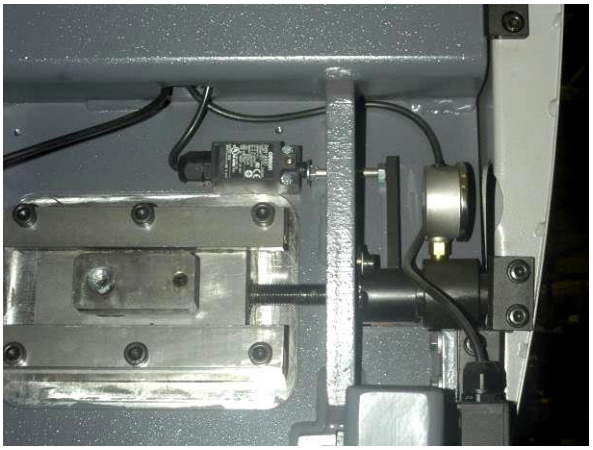

1. Dismount the protective cover.
2. Tighten the saw band by means of TENZOMAT to the optimum value (see table on Tenzomat).

- If the drive motor is on, yet the band is not running, turn the tightening screw clockwise with a spanner until the motor starts running.
- If the drive motor can be started, turn the tightening screw counter-clockwise until the motor stops; then again shortly clockwise until the motor starts running.

3. Mount the protective cover.

### 4.6.2. Check of adjustment of limit switches of the upper and lower position of the arm

Adjustment of limit switches of the upper and lower arm position can be done with adjusting screws located on the limit switch holders.

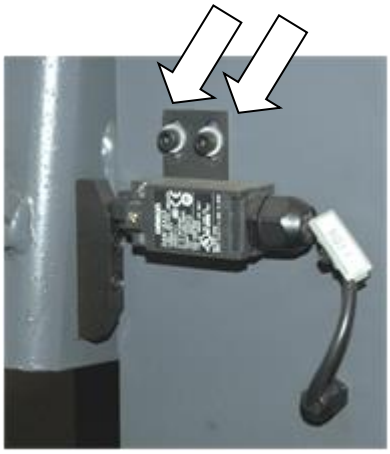

#### 1. Limit switch of the arm lower position

The limit switch of the lower arm position defines the arm stop in the lower position. If the switch is not adjusted correctly, the table may be cut through too deeply or the material cutting will not be finished.

If the lower arm stop has been adjusted, the limit switch must be set again.

**Setting check**

Lower the arm to the bottom position. If the arm rests on the lower stop and the limit switch has responded, the setting is all right. Otherwise set the switch.

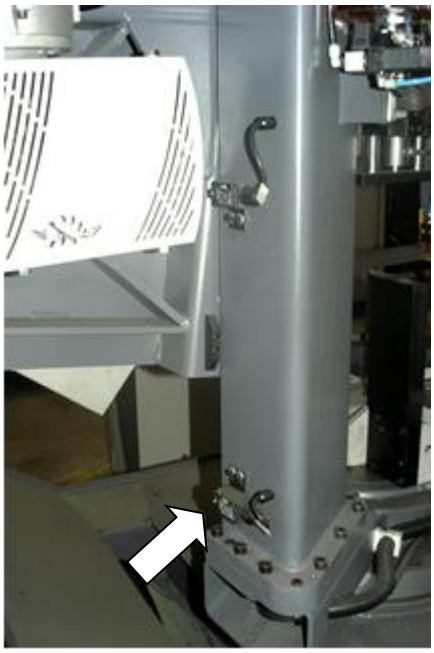

The counterpart of the limit switch is the lower inclined plane of the stop plate

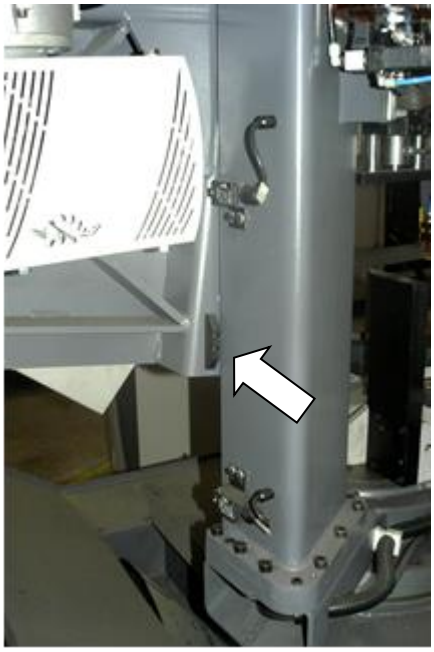

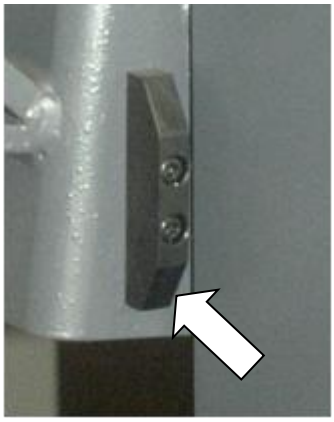

## 2. Limit switch of the upper arm position

The limit switch of the upper arm position has two functions - it defines the arm stop at the upper position and also defines the arm position at referencing.

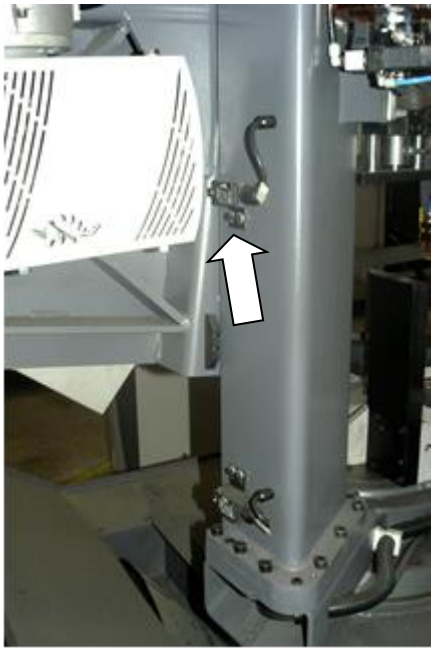

The counterpart of the limit switch is the upper inclined plane of the stop plate.

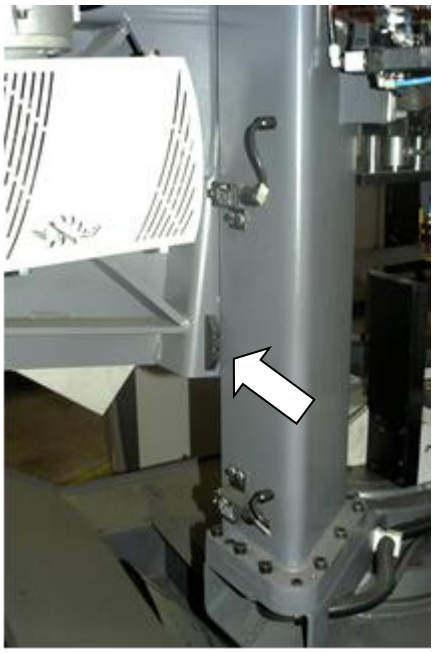

### 4.6.3. Check of setting of the inductive sensor of the bundler opening

The inductive sensor of the bundler opening has two functions – it defines the position of full opening of the bundler movable jaw as well as position of the bundler during referencing

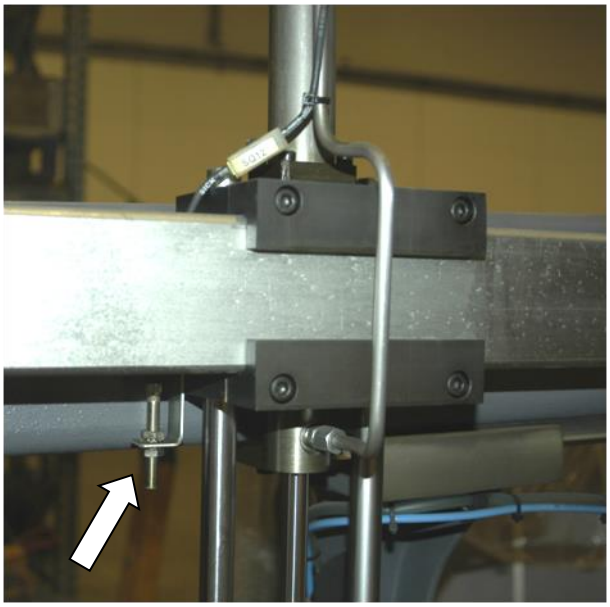

The counterpart of the inductive sensor is the upper surface of the bundler jaw.

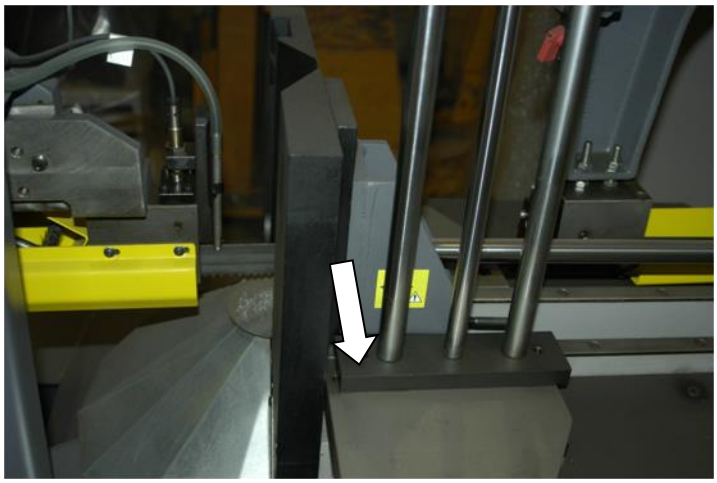

To adjust the inductive sensor, carefully loosen/adjust the sensor and tighten the locking nuts on the threaded sensor stop. For faultless function of the sensor, you must set the gap between the sensor/jaw up to 1mm.

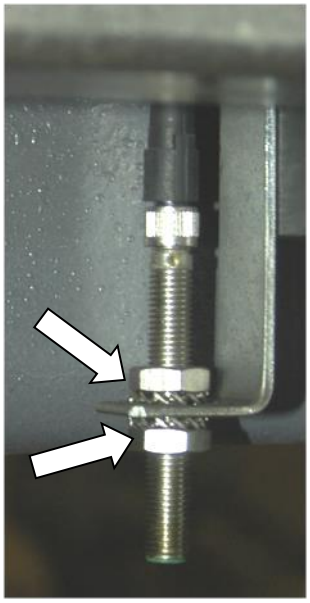

Closing of the sensor (presence of the bundler jaws) is indicated by lighting of the pilot light on the sensor body.

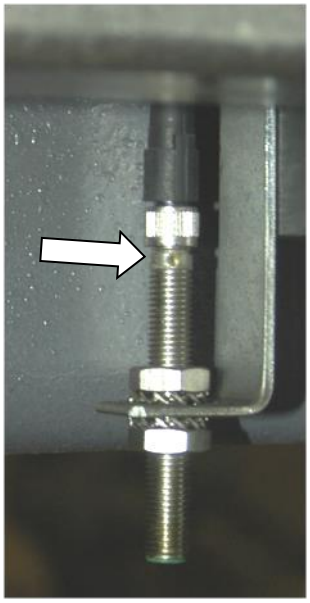

### 4.6.4. Check and adjustment of the vice opening limit switch

The limit switch of the vice opening has two functions - it defines full opening of the movable jaw of the vice and also defines the movable jaw position at referencing.

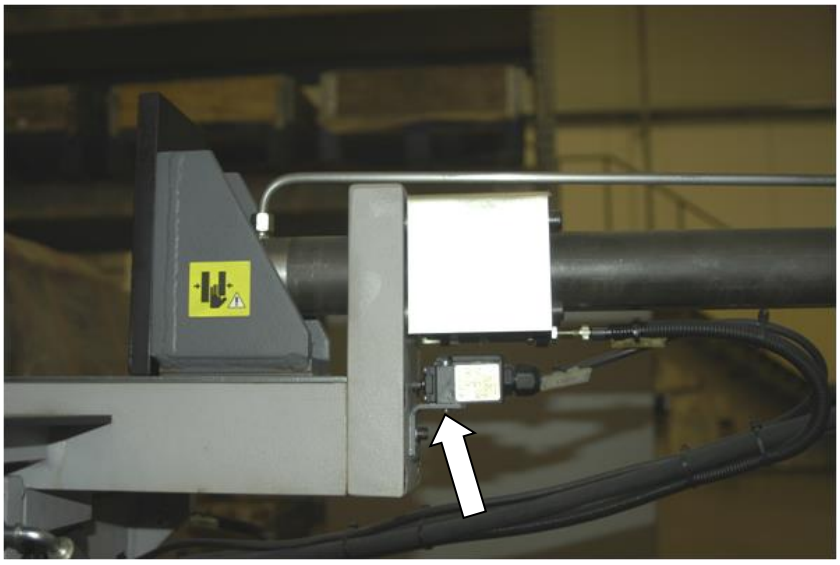

The counterpart of the limit switch is the bar stop located on the moving jaw of the vice.

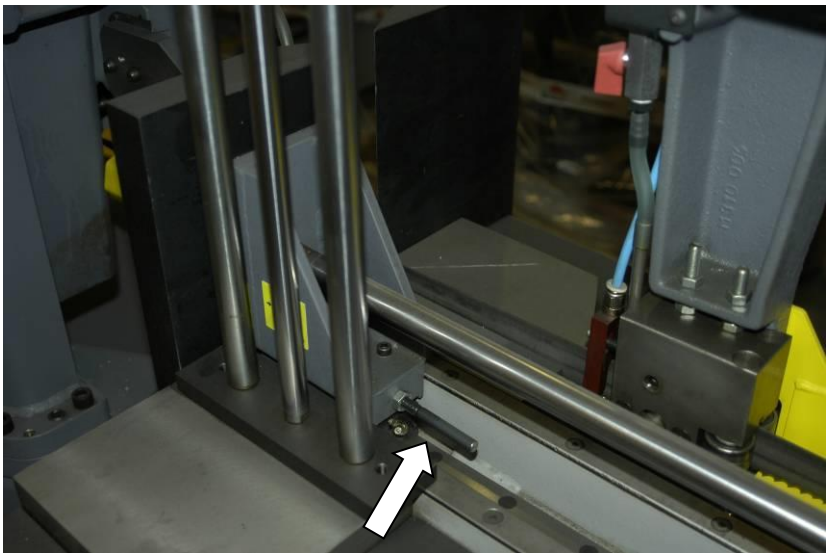

The position of the limit switch of full opening of the vice movable jaw towards the bar stop is adjusted by the setting screws located on the limit switch holder.

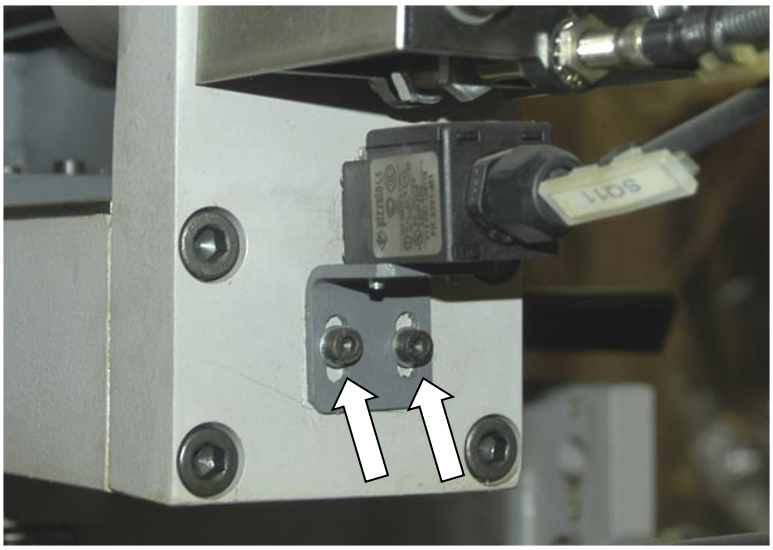

To adjust the bar stop, loosen the locking nut / adjust the stop / tighten the nut.

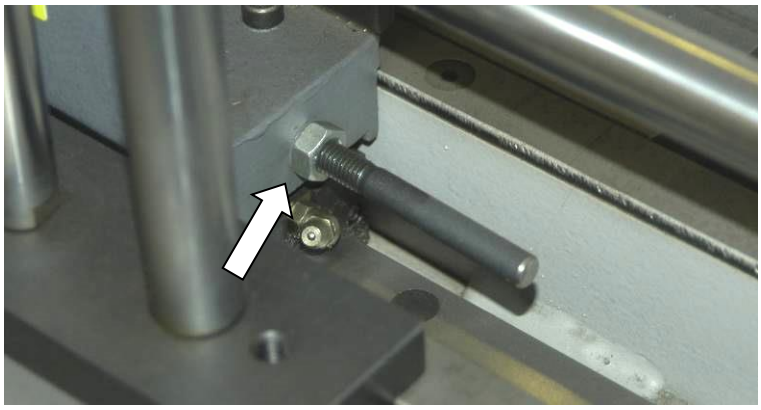

### 4.6.5. Check and adjustment of the table position inductive sensors

The right inductive sensor of the table position defines the table position on the right (from operator's perspective). To this position, the table is automatically moved if negative angles are divided.

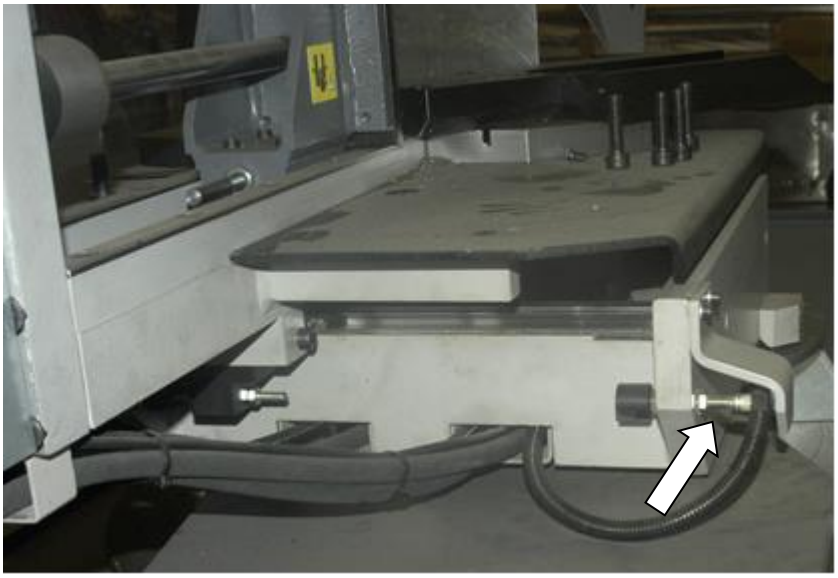

The left inductive sensor of the table position has two functions – it defines the table position on the left (from operator's perspective); to this position, the table is automatically moved if positive angles are divided, and it also defines the table position during referencing

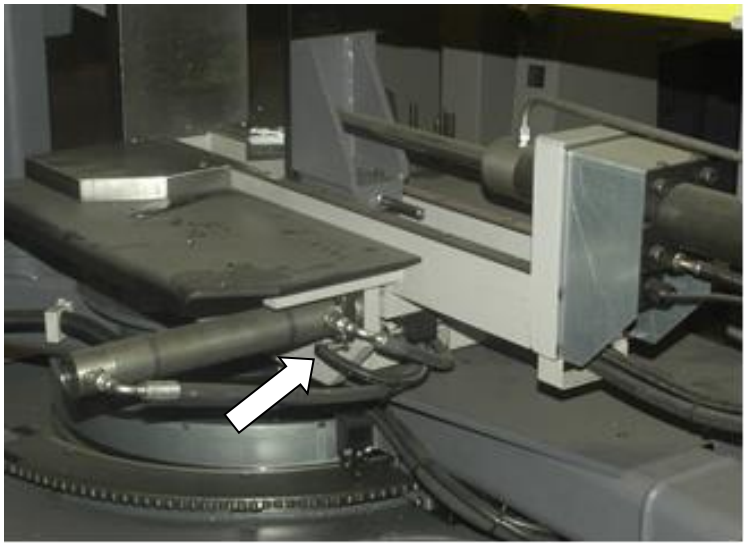

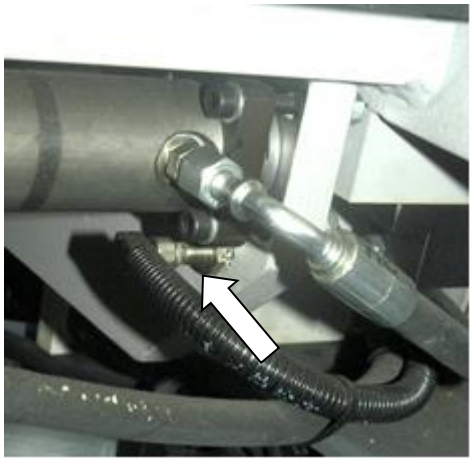

The counterpart of the inductive sensors of the table position is the opposite surfaces of the stop bar, located in the central holder

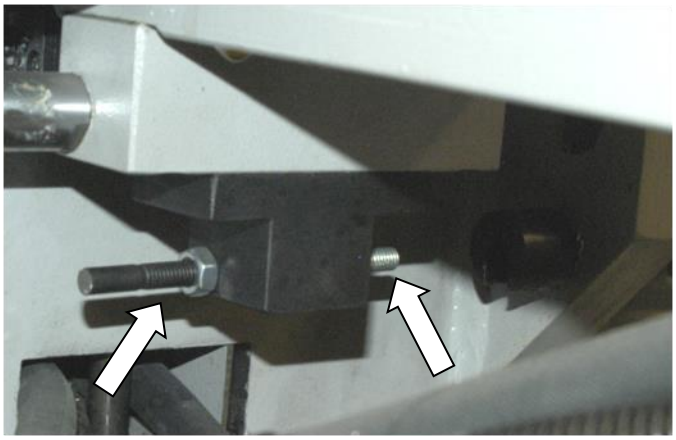

The adjustment procedure of the inductive sensors is analogous to "Adjustment of the inductive sensor of the bundler opening".

These covers protect magnetic ends of the switches against impurities, particularly against collection of metal swarf. Removal of the covers may result in malfunction of the switches!

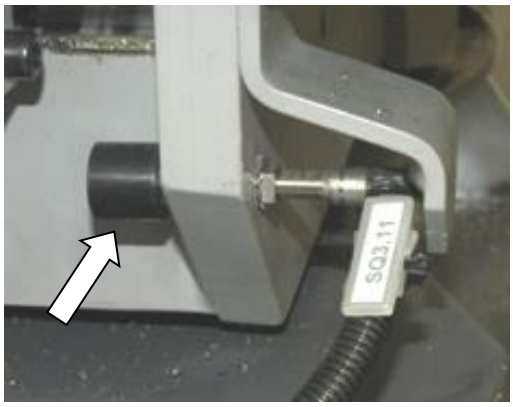

### 4.6.6. Check of switches and sensors of the arm rotation

The arm rotation is checked by the following sensors and switches:

1. **Limit switch of the arm extreme position during rotation at a negative angle** (for Topline DGH without automatic angle swivel and for Topline 510.350 DGH with automatic angle swivel)
2. **Limit switch of the arm extreme position during rotation at a positive angle** (for Topline DGH without automatic angle swivel and for Topline 510.350 DGH with automatic angle swivel)
3. **Referencing limit switch of the arm position** (only for Topline 510.350 DGH with automatic angle swivel)
4. **Sensor for position measurement during arm rotation** (only for Topline 510.350 DGH with automatic angle swivel)

The limit switch of the extreme arm position during rotation at a positive angle (for both types of Topline DGH), and also the referencing limit switch of the arm position and position measurement sensor during the arm rotation (for Topline 510.350 DGH with automatic angle swivel) are located on the slewing bracket under the cover.

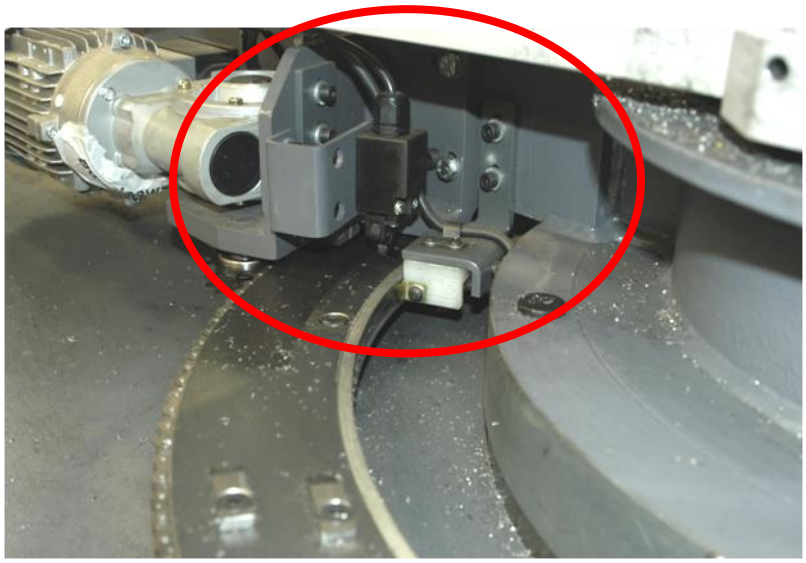

To check/adjust the switches, remove 4 attachment screws of the cover.

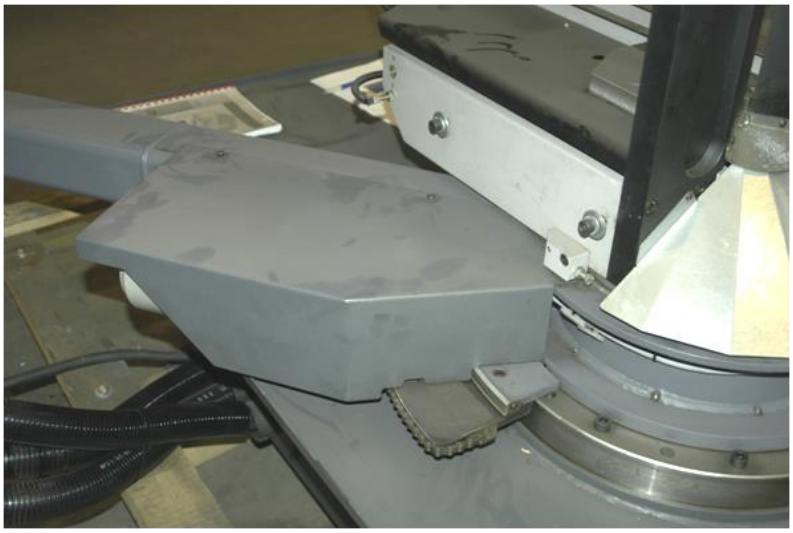

To gain access to the extreme screw on the upper cover surface, swivel the arm in the manual mode to the position in which the screw can be dismounted.

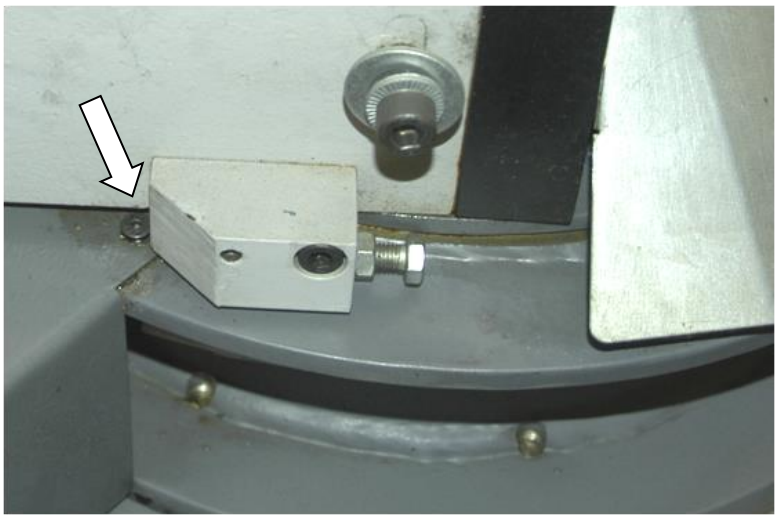

1. **Limit switch of the extreme arm position during rotation at a negative angle**

   **Limit switch of the extreme arm position during rotation at a negative angle** (see the arrow) is used to stop the arm during rotation at the extreme angle of **-60°.**

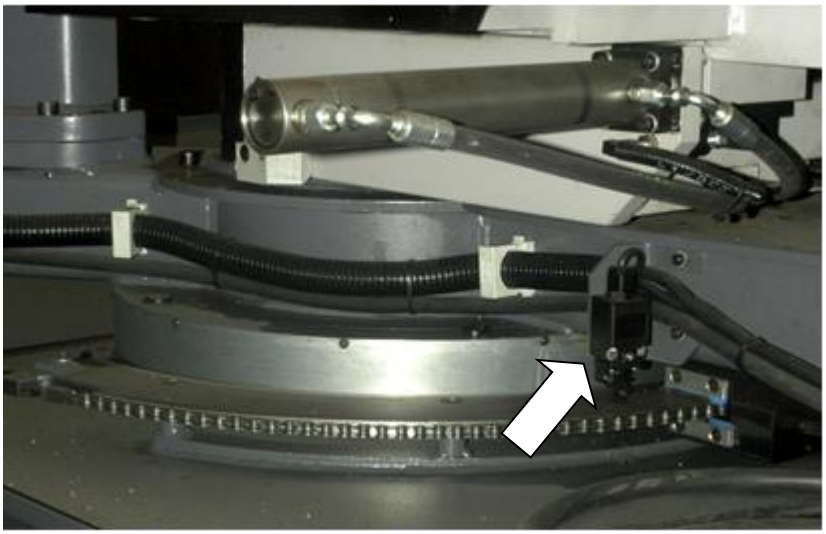

The counterpart of the arm extreme position limit switch at a negative angle is the stop plate located on the guide plate.

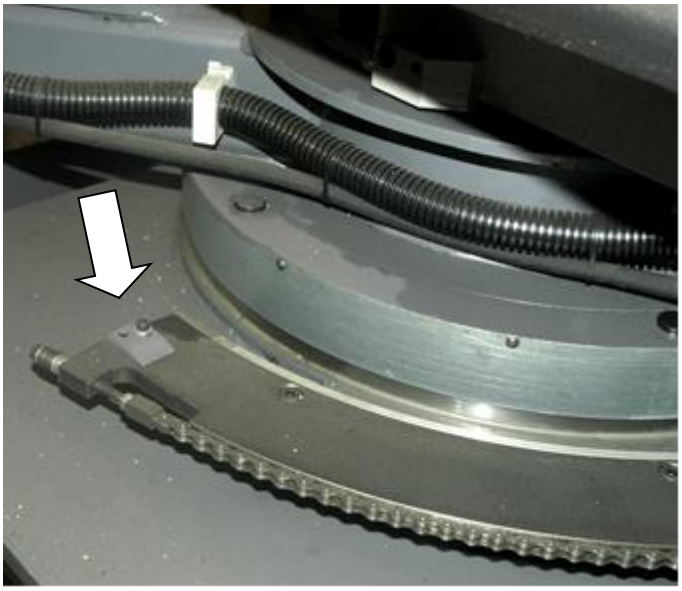

2. **Limit switch of the extreme arm position during rotation at a positive angle**

**Limit switch of the extreme arm position during rotation at a negative angle** (see the arrow) is used to stop the arm during rotation at the extreme angle of **+45°.**

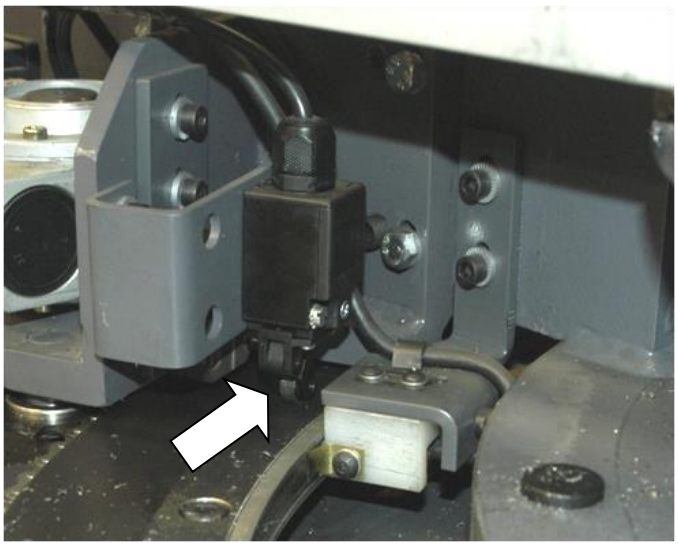

The counterpart of the arm extreme position limit switch at a positive angle is the stop plate located on the guide plate.

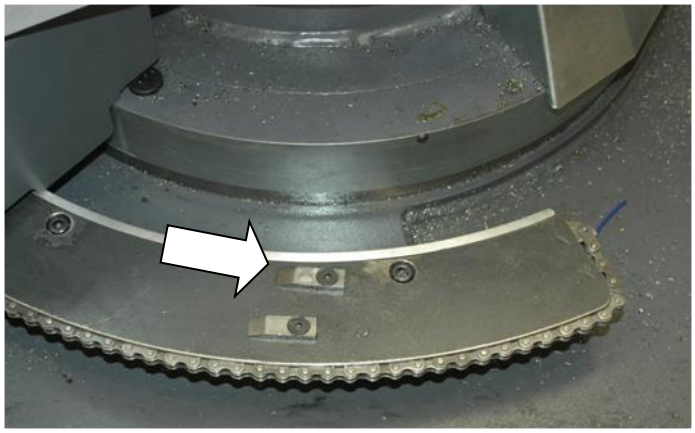

### 3. Reference limit switch of the arm position (only for Topline DGH with automatic angle swivel)

The reference limit switch of the arm position defines the arm position during referencing – after referencing starts, the arm is slowly and smoothly moving towards this switch; after closing, the arm quickly moves back to the initial/specified position.

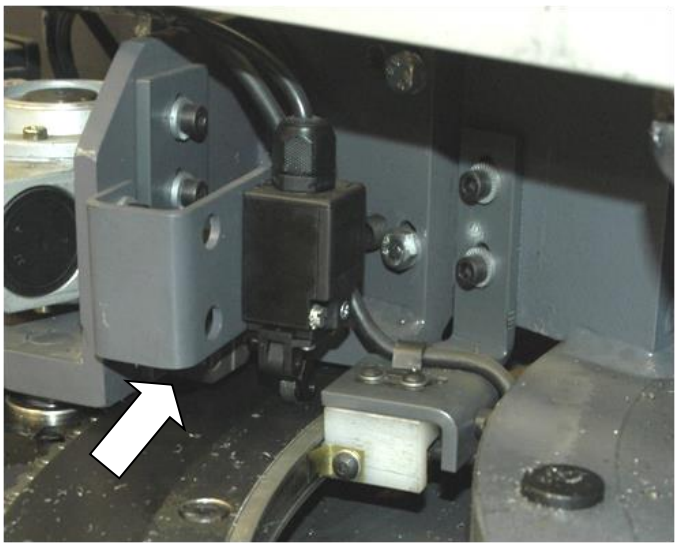

The counterpart of the reference limit switch of the arm position is the stop plate.

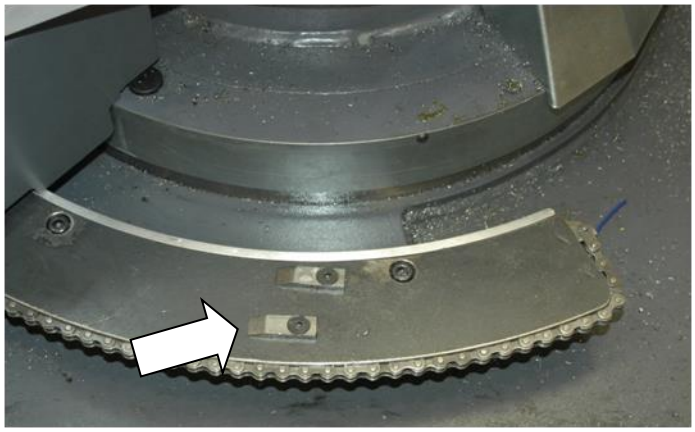

The stop cannot be adjusted. In the case of its malfunction, replace it. If the switch is really damaged and must be replaced, it is NECESSARY to check or readjust correct arm positioning to the initial/specified position – CONTACT THE MANUFACTURER!

**4. Sensor for position measurement during the arm rotation (only for Topline DGH with automatic angle swivel)**

ELGO sensor for angle measurement – measuring sensor by means of which the rotation is set to the given angle. The sensor detects values against a magnetic tape located along the entire track of the bend measured. IT IS NECESSARY to keep this mechanism clean/undamaged, otherwise there is a risk of wrong positioning of the arm!

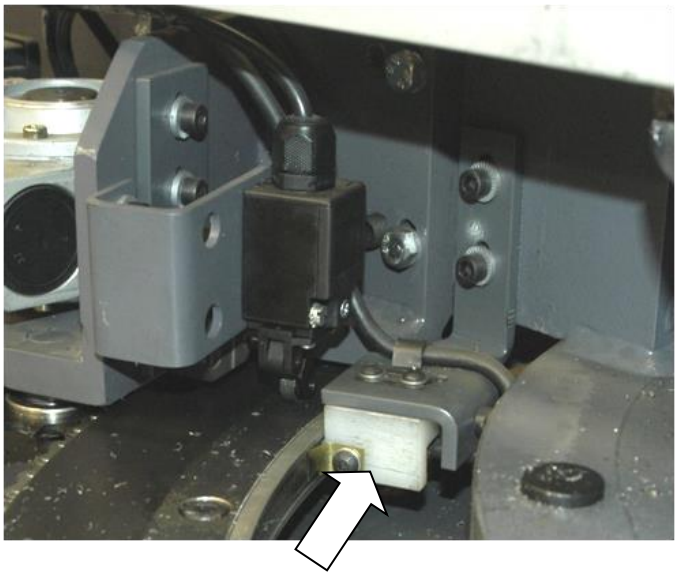

In the case of damage, CONTACT THE MANUFACTURER!

## 4.7. Check of the inductive switch to control the thrust to cut

The inductive switch for control of thrust to cut is used to control the thrust to cut depending on the current band deflection.

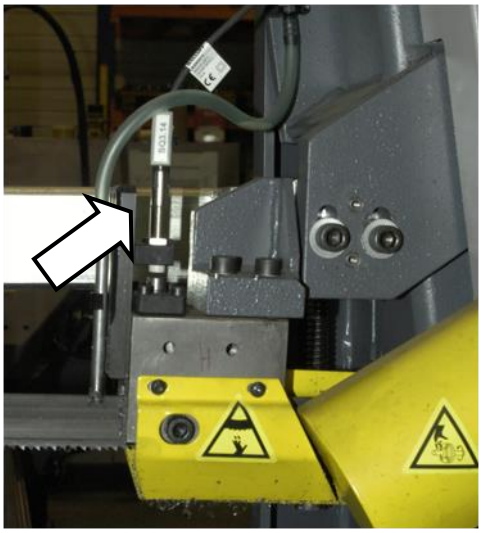

The counterpart of the inductive switch for control of thrust to cut is the opposite area of the guide cube.

**Regularly check the state of the switch and counterpart; the recommended interval is once a month.**

**If problems with the thrust-to-cut control occur, check the state of this switch.**

**If the switch is adjusted incorrectly, it is necessary to readjust the device for thrust-to-cut control – see chapter "Adjustment of the device for control of thrust to cut".**

**If the switch is damaged, contact a special service.**

## 4.8. Adjustment of the device for control of thrust to cut

**If the holder with the inductive sensor for control of thrust to cut h was dismounted, the thrust to cut control must be readjusted in the following way:**

1. Adjust the distance between the inductive switch and the opposite cube area to 2 mm

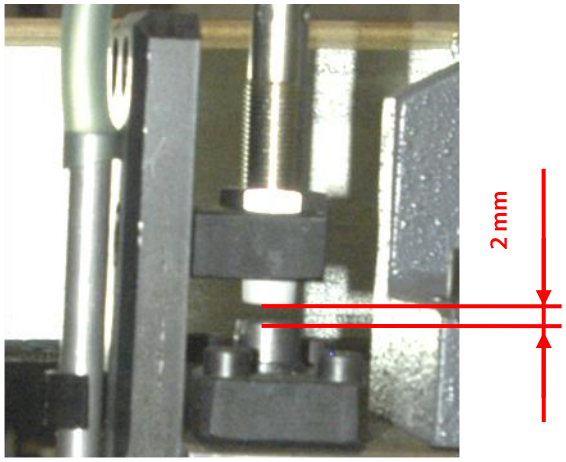

## 4.9. Cooling agents and chips disposal

| The quality of the cooling agent will deteriorate due to: | If the solution is too weak: | If the solution is too strong: |
|---|---|---|
| • use of contaminated water<br>• impurity<br>• outside oil contamination (hydraulics, gears)<br>• high operating temperatures<br>• lack of air circulation<br>• wrong concentration | • corrosion protection is diminished<br>• lubrication decreases<br>• microbial attack is more likely | • the cooling ability is decreased<br>• foam behaviour increases<br>• emulsions stability deteriorates<br>• sticky residue develops |

### 4.9.1. Coolant device inspection

The state of the cooling agent has significant influence on the cutting quality and on the operational life of the machine. Lifetime of the cooling liquid is 1 year, after this time we recommend change the cooling liquid. This time is dependent on the degree of pollution cooling liquid (especially with oils) and on the other factors.

***Check level of the cooling liquid and function of the pump periodically!***

***Note:***
*If the state of the cooling liquid is not satisfactory, the cooling liquid must be changed.*

**Check the state of the cooling agent according to the following table:**

| Testing | Interval | Method | Condition | Precaution |
|---|---|---|---|---|
| **Liquid level** | daily | visually | too low | after concentration check, refill with water or emulsion |
| **Concentration** | daily | refractometer<br>densimeter | too high<br>too low | refill water<br>refill base emulsion |
| **Smell** | daily | by sense of smell | unpleasant smell | good ventilation, add biocides or renew coolant |
| **Contamination** | daily | by sense of smell | visible oil leaks, sludge fungi | surface cleaning, fix leaks, add biocides or fungicides, or coolant renewal after added system cleanser* |
| **Corrosion-protection** | when necessary | visually<br>chip test<br>Herbert-test | insufficient corrosion protection | test stability, if necessary – increase concentration or pH value |
| **Stability** | when necessary | refractometer | oiling | add concentrate, enquiries to supplier |
| **Foam reaction** | when necessary | shaking test | too much foam, foam disperses too slowly | avoid aeration, increase water hardness, ix with defoamer |

* According to manufacturers' instructions

### 4.9.2. Mikroniser(box) – mist lubrication

The placement of a Microniser at the machine is pursuant to this photo

Next photos are for illustrative purposes only.

Microniser is a device used to create a lubricating oil mist in precise doses of oil and air mixture, which is then applied directly to the saw band.

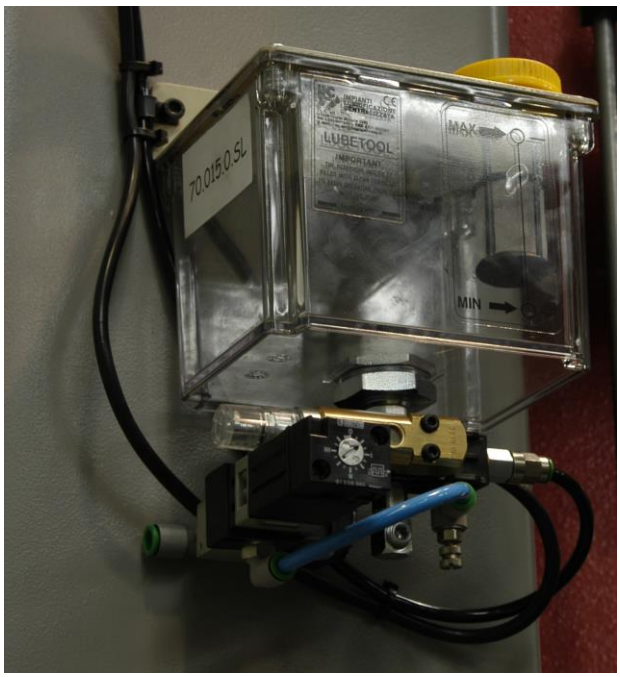

.***Microniser setting:***

1. For proper function of the Microniser pressured air (in the range of 0.5 to 0.5 MPa (5-6 bar)) must supplied from the pneumatic system (dry, clean, free of particles) see - arrow **1**

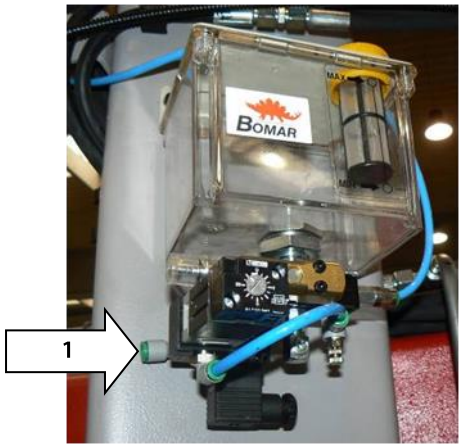


2. Arrow **2** - shows the output of the cooling medium (air + oil).

   Arrow **3** - shows the inlet for the power supply cable.

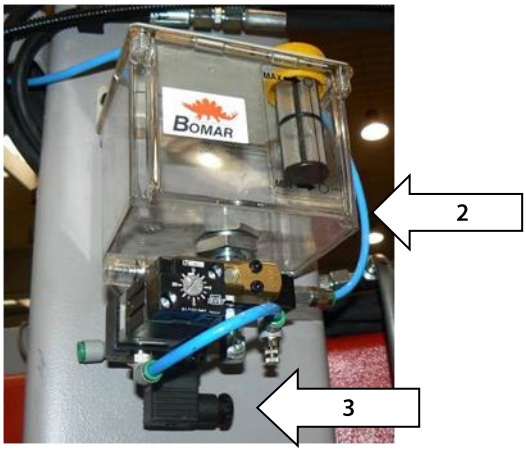


3. Set the interval of cutting oil dispersion on the Microniser- **arrow 4** (3-20 pulses / min.). Adjust this interval to the parameters of the saw band and cut material.

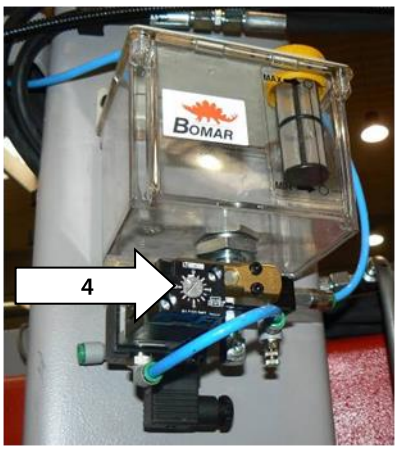

4. Adjust the amount of oil with a regulator - arrow **5**

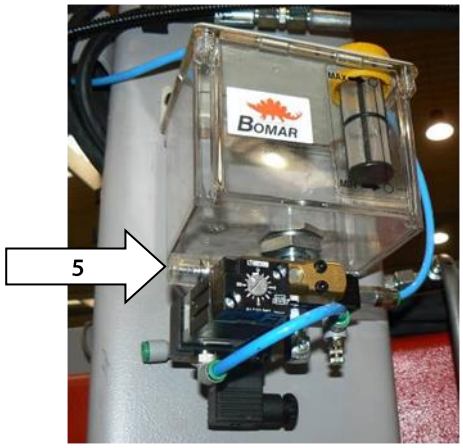


5. Setting the air quantity using another regulator - arrow **6**

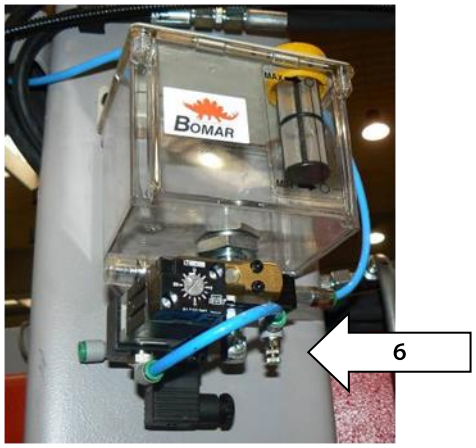


6. Switching on / off of the Microniser is depends on the control system of the machine it is installed on. See chapter "Machine control".

**Recommended cutting oils for Micronisation:**

| Manufacturer | Cutting oil |
|---|---|
| Biona | Biocut |
| Paramo | Paramo cut 22 |

Featured are cutting oils with viscosity class 22.l

Adding of the coolant is possible after removing the filling cap. After the filing is finished the cap must be screwed in again.

Package Includes: a tank with regulators, connection 6m hose, diffuser.

### 4.9.3. Connecting to the compressed air supply

Connect the machine to the compressed air supply by means of the G1/4 screwing.

**Compressed air must satisfy conditions:**

- Roughly cleaned and partly dry
- $p_{min}$ = **0,4** MPa
- $p_{max}$ = **0,6** MPa

## 4.10. Chips disposal

Chips resulting from cutting operations must be disposed of in accordance with the relevant regulations.

- Let the chips drip excess fluid!.
- Fill a watertight container with the chips! Be careful that the container does not leak, because even after a long dripping time, they still contain coolant residue.
- *Place the container into the care of a disposal company equipped for the disposal of chips contaminated with cooling liquid.* In case the machine is equipped with micro-spray installation, the chips must also be handed over to a disposal company.

## 4.11. Hydraulic, Greases and oils

### 4.11.1. Gearbox oils

In gearboxes, oil is used for the whole lifetime of the gearbox. We recommend replacing of the filling oil in case of repair.

Use oils with specification DIN 51517 in the gearboxes. Select the viscosity grade ISO VG according to the original oil fill.

***Attention:***
*When replacing, use oils recommended by BOMAR or oils, which has comparable parameters from the other manufacturers.*
*Do not forget, that mineral and synthetic oils must not be mixed!*

**Recommended oils and quantity according to the type of the band saw**

| Band saw | Gearbox oil | Capacity |
|---|---|---|
| Individual 520.360 DGH | Shell Tivela S 320 | 3,3 l |
| Swarf conveyor | Shell Tivela S 320 | 0,075 l |

**Comparative table of the gearbox oils**

| Manufacturer | Viscosity grade | | |
|---|---|---|---|
| | ISO VG 100 | ISO VG 220 | ISO VG 320 |
| BP | Energol GR-XP 100 | Energol GR-XP 220 | Energol GR-XP 320 |
| Castrol | Alpha SP 100<br>Alpha MW 100 | Alpha SP 220<br>Alpha MW 220 | |
| Elf | Reductelf SP 100 | Reductelf SP 220<br>Reductelf Synthese 220 | Reductelf SP 320 |
| Esso | Spartan EP 100 | Spartan EP 220 | Spartan EP 320 |
| Mobil | Mobilgear 627 | Mobilgear SHC 220<br>Mobilgear 630 | Mobilgear 632 |
| ÖMV | | PG 220 | |
| Paramo | PP 7 | Paramo CLP 220 | Paramo CLP 320 |
| Shell | Shell Omala 100 | Shell Omala 220<br>Shell Tivela S 220 | Shell Omala 320<br>Shell Tivela S 320 |
| Total | Carter EP 100 | Carter EP 220 | Carter EP 320 |

### 4.11.2. Lubricant greases

We recommend using lithium based saponified grease, class NGLI-2 for lubrication. Different greases are mixable, if their oil bases and consistence type are identical.

**Comparative table of the lubricant greases:**

| Manufacturer | Type of the lubricant grease |
|---|---|
| BP | Energrease LS - EP |
| DEA | Paragon EP1 |
| Esso | FETT EGL 3144 |
| | Beacon EP 1 |
| | Beacon EP 2 |
| FINA | FINA LICAL M12 |
| Klüber | Microlube GB0 |
| | Staburags NBU8EP |
| | Isoflex Spezial |
| Optimol | Optimol Longtime PD 0, PD1, PD2 |
| Shell Aseol AG | ASEOL Litea EP 806-077 |
| Texaco | Multifak EP1 |

### 4.11.3. Lubrication

There are several placing on the machine, which are necessary to grease periodically. It secures the right function of the machine.

| Lubrication place | Lubrication |
|---|---|
| 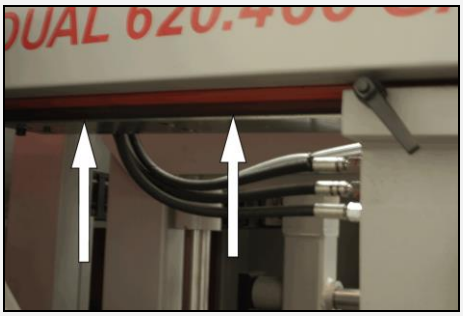 | The guiding cubes leading – grease with oil from both sides once a week. |
| 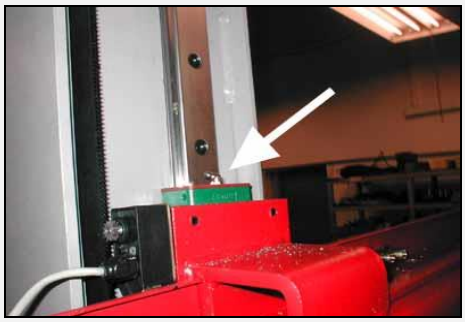 | The linear guiding of the saw arm – lubricate with grease once a three months (see chapter **Lubricant greases**). Use 3-5g grease on the every carriage of the linear guiding. Use the grease gun to the lubrication. Drive 3-5 times whole line of the linear guiding during lubrication. |

### 4.11.4. Hydraulic oils

Replace the hydraulic oil once in 2 years, because the oil can deteriorate its properties and cause problems the hydraulic equipment. If the hydraulic system is equipped with filter (2SF 56/48-0,063), replace the filter too.

Use oils with specification DIN 51524-HLP, ISO 6743-4 and viscosity grade ISO VG 46 in hydraulic aggregates. Hydraulic oils quantity – see chapter **Hydraulic oil level check**.

***Note:***
*When replacing, use oils recommended by BOMAR or oils, which has comparable parameters from the other manufacturers. Do not forget, that mineral and synthetic oils may not be mixed!*

**Comparative table of the hydraulic oils**

| Manufacturer | Type | Manufacturer | Type |
|---|---|---|---|
| Agip | Oso 46 | Ina | Hidraol 46 HD |
| Aral | Vitam GF 46 | Klüber | Lamora HLP 46 |
| Avia | Avilub RSL 46 | Hungary | Hidrokomol P 46 |
| Benzina | OH-HM 46 | Mobil | Mobil DTE 25 |
| BP | Energol HLP 46 | ÖMV | HLP 46 |
| Bulgaria | MX-M/46 | Poland | Hydrol 30 |
| Castrol | Hyspin AWS 46 | Rumania | H 46 EP |
| Čepro | Mogul HM 46 | Russia | IGP 30 |
| DEA | Astron HLP 4hy6 | Shell | Tellus Oil 46 |
| Elf | Elfolna 46 | Sun | Sunvis 846 WR |
| Esso | Nuto H 46 | Texaco | Rando HD B 46 |
| Fam | HD 5040 | Valvoline | Ultramax AW 46 |

| Manufacturer | Type | Manufacturer | Type |
|---|---|---|---|
| Fina | Hydran 46 | | |

### 4.11.5. Hydraulic unit service

After 50 hours working time, or the latest 3 month after the first run, the first service should be carried out. This includes:

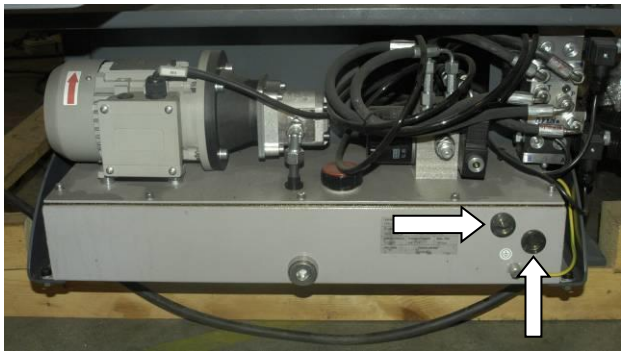

- checking off all screws and connections, fixing points, tubes and hoses for leakage
- Cheb hydraulic oil level
- During time of duty the oil temperature shouldn´t exceed 60-70°C
- check function of signaling components (thermometer, level gauge, dirty filter indicator)
- Check the adjustment of working pressure

**To realise a high reliability of the power pack, the manufacturer lays down following inspection intervals**

| Interval | daily | weekly | monthly | three monthly | six monthly | annually |
|---|---|---|---|---|---|---|
| **Hydraulic fluid** | | | | | | |
| Level | - | • | - | - | - | - |
| Temperature | - | • | - | - | - | - |
| Condition | - | - | • | - | - | - |
| Change interval | - | - | - | - | - | • |
| **Filter** | | | | | | |
| Change interval | - | - | - | - | - | - |
| **Other checks** | | | | | | |
| External Leakages | • | - | - | - | - | - |
| Contamination | • | - | - | - | - | - |
| Damages | • | • | - | - | - | - |
| Noise-(level) | • | - | - | - | - | - |
| Gauges | - | - | • | - | - | - |

## 4.12. Machine cleaning

Clean the machine from the cooling liquid and impurities after every shift stopping. Conserve the guiding surfaces, mainly.

- Clamping jaws guiding of the vice.
- The guiding of the feeder.
- Loading surface of the vice.

## 4.13. Worn pieces replacement

### 4.13.1. Hard metal guides replacement

If the hard metal guides cannot be adjusted, they have to be replace.

> ***ATTENTION!***
> ***Hard metal guides must be replaced together on both guiding cubes!***

1. Disconnect the cooling liquid inlet; dismount the saw band and the saw band guide cube. Dismount the holder with cooling and regulation from the guide cube with the thrust-to-cut control device..

2. Loosen the binding screws of the fixed holder of hard metal guides and remove the holder.

3. Loosen the binding screws of the adjustable holder of hard metal guides.

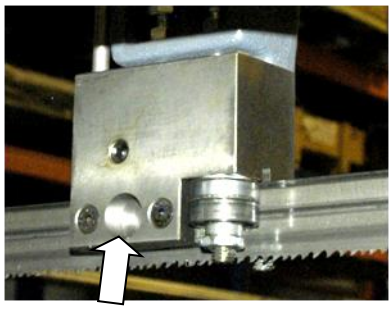

4. Through the hole in the opposite wall, release the lock ring which retains the setting screw of the adjustable holder of hard-metal guide

5. Dismount the setting screw of the adjustable holder of hard-metal guides and remove the holder.
6. Insert new hard metal guides, fix them firmly.
7. Mount the guide cube on the machine. Mount the holder with cooling and regulation on the guide cube with the thrust-to-cut control device.
8. Mount the saw band and connect the cooling.
9. Set the hard metal guides on the machine.

### 4.13.2. Hard metal guides adjustment on the machine

After replacement of the saw band and mounting of the guide cubes on the machine, it is necessary to adjust the hard metal guides on the machine.

Correct adjustment of the hard metal guides has a great influence on cutting accuracy and life of the saw band.

**Set the hard metal guides on both of the guide cubes simultaneously!**

1. Carefully tighten the setting screw of the adjustable holder of hard-metal guides on the guide cube to release the saw band.
2. Then loosen the screw slowly, until the hard-metal plate touches the saw band. It must be possible to turn the screw by hand freely.
3. In the same way, set the hard-metal guides on the right cube as well.

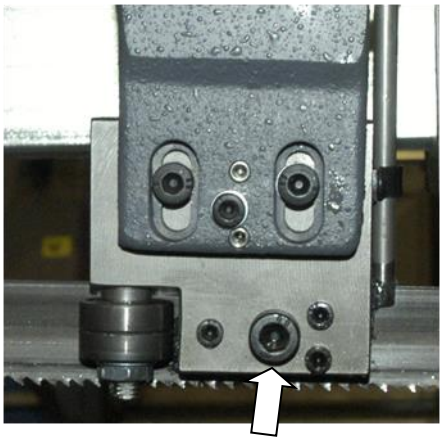

### 4.13.3. Saw band guiding pulleys replacement

If the saw band is not sufficiently guided by guiding pulleys or if the pulleys are obviously worn, the pulleys should be replaced.

> *ATTENTION!*
> *Guiding pulleys must be replaced together on both guiding cubes!!*

1. Disconnect the cooling liquid inlet; dismount the saw band and the saw band guide cube. Dismount the holder with cooling and regulation from the guide cube with the thrust-to-cut control device.

2. Fasten the guide cube in the vice; then dismount both eccentrics with bearings in the described way.

> ***Caution!***
> ***Mark the location of both eccentrics and parts on the eccentric! The eccentrics are not interchangeable!***

10.

3. Dismount the nuts from the eccentrics.

4. Remove eccentrics from bearings by means of the swager and pull them out from the cube.

5. Change all worn bearings and others worn parts.

6. Install eccentrics to the cubes. Install components on both eccentrics in given order. Put bearings by means of the preparation on eccentrics.

> ***ATTENTION!***
> ***Do not replace the eccentrics placing in the cube***

7. Screw on nuts on both eccentrics and tighten them lightly.

8. Now insert a piece of the guide band in the guide cube (approx. 15 – 20 cm). Set the eccentrics with spanners so that the band runs in the middle. The guide rollers must not push on the saw band too much, but they must rotate freely during the saw band run..
9. Tighten the nuts on both eccentrics.
10. Remove the test piece of the saw band from the cube guide.
11. Mount the guide cube on the machine. Mount the holder with cooling and regulation on the guide cube with the thrust-to-cut control device.
12. Mount the saw band and connect the cooling.
13. If it is necessarry, set the hard metal guides on the machine..

### 4.13.4. Pushing bearing replacement

If it is impossible to adjust the bundle gripping assembly and the pushing bearing is worn, it needs to be replaced.

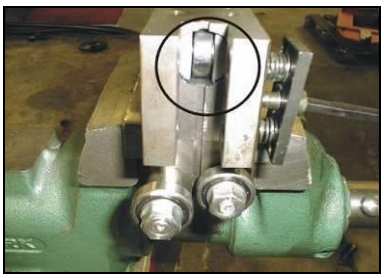

The bearing condition is possible discover, on the cube from the bottom side, for a better inspection is possible to put out the holder of the bearing from the cube.

If the bearing is worn, there is a visible groove on its surface.

**Bearing replacement:**

1. Disconnect the cooling liquid inlet; dismount the saw band and the saw band guide cube. Dismount the holder with cooling and regulation from the guide cube with the thrust-to-cut control device.

2. Fasten a dismantled cube into the vice and by means of the Allen wrench release fixative screw of the bearing holder. Remove the bearing holder from the cube
3. Insert the bearing holder to the vice.

***Attention:***
***The vice has to have aluminium jaws, eventually, there has to be an aluminium agent to protect the bearing holder from damage.***

4. Remove the bearing pivot from the bearing holder by means of the pusher and remove the parts, which were threaded on the pivot.

11. 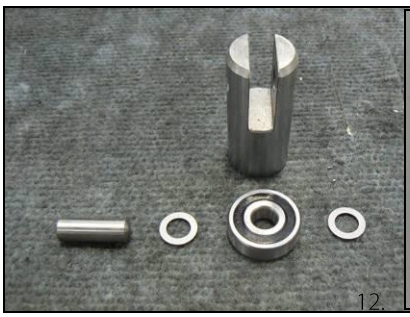

12.

5. Check all parts and remove the worn ones. Including the bearings.
6. Fasten the holder to the vice for mounting again for montage.

***Attention:***
***The vice has to have aluminium jaws, eventually, there has to be an aluminium agent to protect the bearing holder from damage.***

7. Insert the bearing(s) and (eventually) pushing ring and washers in prescribed order and return the pivot to its original place.

***Attention:***
***The pivot may not extend past the holder; otherwise, the bundle gripping assembly regulator gets worse!***

8. Insert the assembled bearing holder into the guide cube and fix it with the grub screw and Allen key.
9. Mount the guide cube on the machine. Mount the holder with cooling and regulation on the guide cube with the thrust-to-cut control device.
10. Mount the saw band and connect the cooling.
11. Set the hard metal guides on the machine if it is necessarry.

## 4.14. Brush replacement

If the chip removing brush is not able to fulfil its function, it has to be replaced.

1. Dismantle the brush cover.

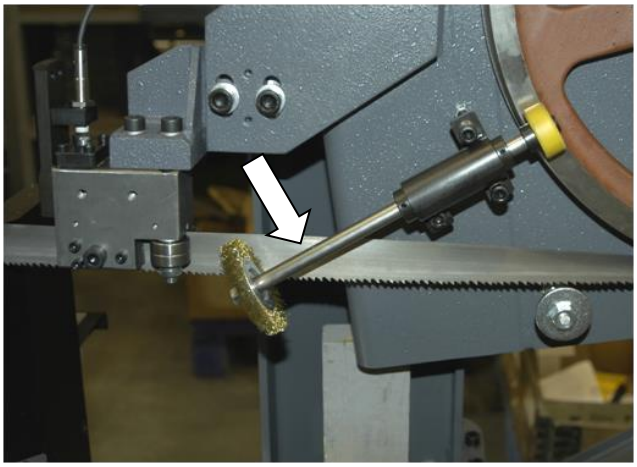

2. Hold the brush shaft, with a spanner, for example

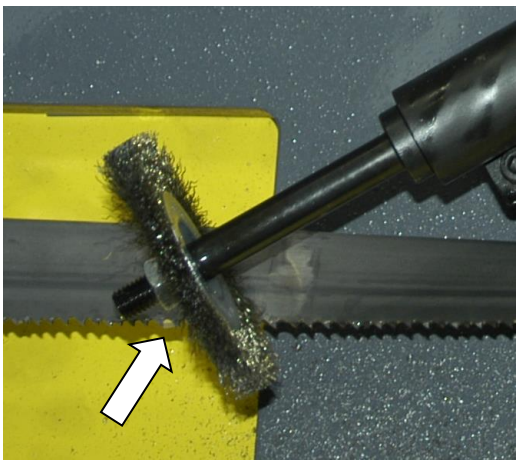

3. Release the nut on the brush, replace worn brush on the new brush, screw on the nut again.
4. Adjust the brush to the saw band.
5. Remount the brush cover.

.

# 5. Závady / Störungen Troubleshooting

## 5.1. Mechanical problems

| Problem | Possible causes | Repair |
|---|---|---|
| 1. Slanting cut | - Wrongly adjusted hard metal guides. | Set according to the chapter „Servicing and adjustment“ |
| | - Worn hard metal guides. | Replace to the chapter „Worn pieces replacement“ |
| | - Wrongly adjusted cubes of the saw band guiding. | Set according to the chapter „Servicing and adjustment“ |
| | - Worn bearings of the saw band guiding. | Replace according to the chapter „Worn pieces replacement“ |
| | - Wrongly adjusted swarf brush. | Set according to the chapter „Servicing and adjustment“ |
| | - Worn swarf brush. | Replace according to the chapter „Worn pieces replacement“ |
| | - Insufficient saw band stretching. | Rise the saw band stretching and set the limit switch. |
| | - Wrongly chosen tooth system of the saw band. | Replace the saw band and keep the instructions of manufacturer on new saw band choice. |
| | - Worn saw band. | Replace the saw band. |
| | - Wrongly balanced roller conveyor. | Set the roller conveyor. |
| | - Dirty feeding board. | Cleanse the feeding board from debris, chip and residue material. |
| | - Guiding arm and guiding cube are loosened. | Clamp the guiding arm. |
| | - Guiding arm and cube are too far from the material. | Set the guiding cube to the material. |
| | - Too fast cutting rate. | Lower the material feeding speed. |
| | - Unexpected oscillation in material quality. | Set the cut and feeding speed to the relevant material. |
| 1. The cut is not cut upon desired angle | - Securing lever is loosened. | Check the securing lever efficiency and carry out its adjustment according to chapter „Servicing and adjustment“. |
| | - Set angle does not match the cut angle. | Check the angle adjustment with a protractor and possibly set it according to chapter „Servicing and adjustment“. |
| | - Insufficient saw band stretching. | Stretch the saw band and set the limit switch according to chapter „Servicing and adjustment“. |
| | - Guiding arm and guiding cube are loosened. | Fasten the guiding arm and the cube. |
| | - Dirt between material and clamping jaw. | Cleanse the material and mating jaw. |
| 2. Short lifetime of the saw band | - Insufficient saw band stretching. | Raise the tightening of the saw band set the scanner of saw band tightening according to chapter „Servicing and adjustment“. |
| | - Worn swarf brush. | Check the swarf brush condition and replace it in case of excessive use as described in chapter „Worn pieces replacement“ |
| | - Wrongly adjusted swarf brush. | Check swarf brush adjustment, set it according to chapter „Servicing and adjustment“ |
| | - Over stretched saw band | Lower stretching of the saw band and set the limit switch of the saw band stretching according to chapter „Servicing and adjustment“ |
| | - Wrongly adjusted hard metal guides. | Check the adjustment of the hard metal guides and carry out adjustment as described in chapter „Servicing and adjustment“ |
| | - Worn hard metal guides of the saw band. | Check the condition of the hard metal guide and if it is too worn, replace hard metal guides according to chapter „Worn pieces replacement“ |

| Problem | Possible causes | Repair |
|---|---|---|
| | - Worn saw band guide bearings. | Check guiding bearings and if you notice some sort of excessive damage, replace them according to chapter„Worn pieces replacement“ |
| | - Wrongly adjusted guiding cubes of the saw band. | Set guiding cube according to chapter „Servicing and adjustment“ |
| | - Wrongly adjusted down feed and saw band speed. | Adjust the feeding and speed of a saw band according to values published by saw band manufacturer. |
| | - Different material quality. | Adjust feeding and speed of a saw band according to desired material (try cut-test). |
| | - Low-class saw band | Replace the saw band (contact your local accessory supplier for more information) |
| | - Wrongly chosen saw band tooth system. | Replace the saw band and keep instructions of the manufacturer on the choice. |
| | - Wrongly adjusted tracking. | Check the space between top of a saw band and driving wheel. Perhaps adjust the tracking as described in chapter „Servicing and adjustment“ |
| 3. Insufficient cut output. | - Worn saw band. | Replace the saw band and keep instructions of the manufacturer on the choice. |
| | - Wrong saw band tooth system. | Replace the saw band and keep instructions of the manufacturer on the choice. |
| | - Wrongly set down feed and speed of a saw band. | Set feed and speed of a saw band according to values published by saw band manufacturer. |
| 4. The cut is not finished. | - Wrongly adjusted lower stop point of the saw frame. | Check lower limit switch and screw. |
| | - Stop point surface is messed-up. | Cleanse stop point surface of the limit switch from debris and residue material. |
| 5. By choke is not possible turn | - Metal clamps between valve and panel. | Clamps must be removed and put on the shaft O-Ring about 10x2 mm. |
| | - Metal clams are in body of valve. | Valve must be cleared or changed. |
| 6. Saw band drive cannot be started. | - Pressure switch is adjusted wrong. | Set the pressure switch according to chapter „Servicing and adjustment“ |
| | - Pressure switch is defective. | Replace defective parts of the pressure switch. |
| 7. The saw bands are cracked. | - In stretching wheel is wrong adjusting geometry. | Adjust distance band from recess wheel c.2 mm according to operating instructions. |
| | - Hard metal plates of circuit saw band are not adjusting. | Hard metal plates of circuit saw band must be adjusting according to operating instructions. |
| | - Guiding cubes are not adjusting (bearings + hard metal circuit) | Guiding cubes must be adjusting (bearings + hard metal circuit) according to operating instructions. |
| | - Bearings of guiding cubes are used (rolling elements are damaged or outside ring of bearing has conical form). | Bearings of guiding cubes must be replaced. Bearings must be adjusting according to operating instructions. |
| 8. Damage tooth system of the saw band | - In gripping the lifting cylinder is backlash. | |
| | - Squeezed pin upper or downer holder of the lifting cylinder. | Exchange complete upper or downer holder of lifting cylinder. |
| 9. The saw is cut downing. | - Geometry of hardmetal guiding cubes is wrong adjusted. | Hardmetal guiding cubes must be adjusted. |
| | - Bearings of guiding cubes are used. | Bearings of guiding cubes must be replaced. |
| 10. Cleansing of the saw band is not functional. | - Elastic wheel of the brush drive is worn-down. | Elastic wheel of the brush must be changed. |
| | - Knurling of the driving wheel is worn-down. | Driving wheel must be changed. |
| | - The shaft of the brush drive is rusted. | The shaft of the brush must be cleaned and oiled. |

| Problem | Possible causes | Repair |
|---|---|---|
| | - The brush position and the brush cover is adjusted wrong – with the brush cannot be turned. | The brush cover must be posed, in order to the brush can be turned. |
| 11. The saw arm periodically rise and fall during the cut; this cause short lifetime of the saw band. | - Backslash in driving wheel lodgement on the shaft. | Change the driving shaft for a long one, new bearings, distance ring, new driving wheel, spring, two covers on the forehead of the shaft + screws. |
| | - Worn channel for spring. | |

## 5.2. Electric and hydraulic problems

| Problem | Possible causes | Repair |
|---|---|---|
| 1. Machine is not possible start. | - In socket is not voltage | Line voltage must be checked. |
| | - Transfer relay is closed (thermal protector) | Each FA relay must be checked. |
| | - Limit switch of saw band stretching, cover of frame or cover of saw band is not started. | Check of saw band stretching and covers closing. |
| 2. When cut is finished, the frame is not raising. | - Bottom limit switch is adjusted wrong. | Bottom limit switch must be adjusted according to chapter ADJUSTING. |
| | - In hydraulic (pneumatic) ring is error. HYTOS (BOSCH) is not acting to frame uplift. | Function of magnetic valve must be checked, valve must be closed, voltage of clamps and inductor must be checked. |
| 3. Electric motor and pump are without voltage. Between contactor and thermal protector is not voltage. | - Wrong contactor. | Replace contactor of engine. |
| 4. The indicator of speed saw band is not functional. | - Sensor of speed is not adjusted. | Sensor of speed must be adjusted. |
| | - Defective display | The display must be changed. |
| | - Wrong sensor – diode of indicator speed is not light. | Sensor must be changed and adjusted. |
| 5. Protector is switched off from engine hydraulic aggregate MA3 sometimes. | - Into hydraulic system is high working pressure. | Service engineer must reduce the pressure in hydraulic system. |
| 6. The hydraulic aggregate cannot be started | Auxiliary contact on thermo-relay FA1 is defective. | Replace the defective contact on motor starter FA1. |
| 7. Hydraulic aggregate is switched on but the saw arm or the main vice is not functional | - Wrong connection of electrical supply. The electrical phases are connected conversely. | The phases must be switched. Only service engineer can do this. |
| 8. Cooling is not active | Lack of cooling agent. | Fill the tank with cooling agent. |
| | - Thermal relay is defective | Change the thermal relay |
| | - Input hosepipe is broken or obstructed. | Check the cooling circuit and perhaps cleanse cooling system. |
| | - Cooling pump protection is defective | Check the protection of cooling pump if need change it. |
| | - Cooling pump is defective. | Replace the cooling pump. |

## 5.3. Hydraulic problems

| Problem | Possible causes | Repair |
|---|---|---|
| 1. Hydrogenerator not supplying oil | • reverse rotation | Check the connections of each phase. Reconnect properly connection of the electrical phases. |
| | • shortage of oil in the tank | Add hydraulic oil |
| | • Oil viscosity does not correspond prescribed viscosity value | Change hydraulic oil. |
| | • Hydrogenerator malfunction | Call service |
| | • Wrong power supply connection. | Check the connections of each phase. Reconnect properly connection of the electrical phases. |
| 2. Hydraulic oil contains bubbles | • Hydraulic circuit is not adequately deaerated | Make deaeration of hydraulic circuit. |
| | • Low oil level | Add hydraulic oil |
| | • the pump shaft seals damaged | Call service |
| 3. Increased mechanical noise | • damaged joint drive | Call service |
| | • damaged or destroyed motor bearings | Call service |
| | • air intake | Check for leaks. |
| 4. Low pressure, pump supplies oil | • problem in the safety valve | Wrong settings. Check the settings and adjust the safety valve. |
| | • pump wear | Call service |
| | • external or internal leakage | Call service |
| 5. Hydrogenerator is seized | • damage by solid particles in oil | Make oil filtration, or call the service. |
| | • non-prescribed oil | Change hydraulic oil. |
| | • wrong type of oil | Change hydraulic oil. |
| | • exceeding the life of the pump | Call service |
| 6. Overheating oil | • cooler malfunction | Check the cooler function or call service. |
| | • wear the pump, the energy is converted into heat | Call service |
| 7. Hydraulic valve can not be readjusted | • electromagnet has no signal (voltage) - interrupted supply lines | Check again. |
| | • Electromagnet coil burnt | Replace coil – Call service. |
| | • spool valve sticking | Replace valve – Call service |

***Note:***

***Frequency Inverter***
***Do install the bandsaw machine at electrical Installation that corresponds recommended technical standards. We recommend to protect the machine using current protectores by characteristics U, able to compansate interchanges of rising current which escapes fromfilter of Frequency Inverter, so that additionalequipments to the machine will not be required than. We don't reccomend to protect a machine by a standard protector current, equipped by a smaller type under 100 mA. Standard used is 30 mA because of currnet escape in accordance of Frequency Inverters fitted on machine. Alternative soulutionshould be used currentprotector (FI) by sensitivity of 100 mA.***

# 6. Schémata / Schemas / Schematics

## 6.1. Elektricke schema / Elektroschema / Wiring diagram

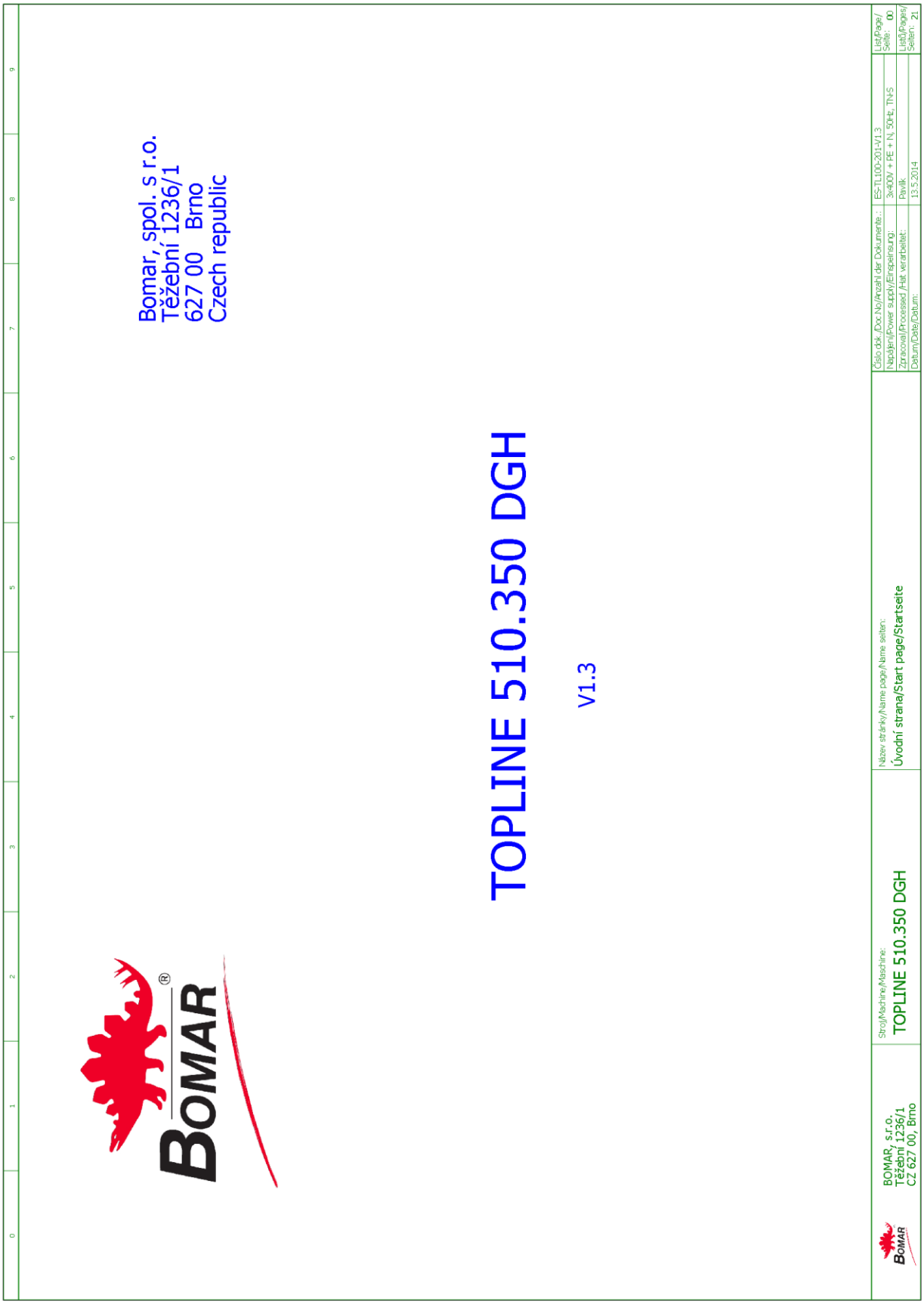

# Obsah/ Table of contents/ Inhaltsverzeichnis


| Stránka/Page/Seite | Název stránky/Name page/Name Seite | Datum/Date/Datum |
|---|---|---|
| 00 | Úvodní strana/Start page/Startseite | 13.5.2014 |
| 01 | Obsah/ Table of contents/ Inhaltsverzeichnis | 13.5.2014 |
| 02 | Kusovník artiklů/ Parts list/ Artikelstückliste | 13.5.2014 |
| 02.a | Kusovník artiklů/ Parts list/ Artikelstückliste | 13.5.2014 |
| 02.b | Kusovník artiklů/ Parts list/ Artikelstückliste | 13.5.2014 |
| 02.c | Kusovník artiklů/ Parts list/ Artikelstückliste | 13.5.2014 |
| 03 | Ovládací panel na rozvaděči/Control panel/Bedienpult | 13.5.2014 |
| 03.a | Rozmístění prvků v rozvaděči RS1 | 13.5.2014 |
| 04 | Silová část / Power part / Feld partie | 13.5.2014 |
| 04.a | Silová část M1, M5, M7/ Power part M1, M5, M7 / Feld partie M1, M5, M7 | 13.5.2014 |
| 04.b | Silová část M2, M4 / Power part M2, M4 / Feld partie M2, M4 | 13.5.2014 |
| 05 | Deska zdroje/Power board/Netzgerat-Platte | 13.5.2014 |
| 06 | Stykače motorů/Motor contactor/Motor-Schutzschalter | 13.5.2014 |
| 07.a | Hydraulické ventily/Hydraulic valve/Hydroventil | 13.5.2014 |
| 08 | Vstupy/Inputs/Eingange | 13.5.2014 |
| 09 | Tlačítka ovládací panel/Button control panel/Taste Bedienpult | 13.5.2014 |
| 10 | Bezpečnostní okruh/Safety circle/Sicherheitsbereich | 13.5.2014 |
| 11 | Frekvenční měnič/Speed controller/Frequenzumrichte | 13.5.2014 |
| 12 | Řídící systém/Control system/Steuersystem | 13.5.2014 |
| 12.a | Řídící systém/Control system/Steuersystem | 13.5.2014 |
| 13 | Příslušenství/Accessories/Zubehör | 13.5.2014 |

# Parts list

| Device identification | Device description | Type number | Manufacturer | Part number | Quantity | Location (page.column) |
|---|---|---|---|---|---|---|
| -SQ11 | Limit switch - 1NO + 1NC | FK 3301-M1 | PIZZATO | 91.173.015 | 1 | /08.4 |
| -CU1 | Touch-sensitive keyboard | 31.R230-207 | AKI ELECTRONIC,spol.s.r.o. | 31.R230-207 | 1 | /12.0 |
| -FA1 | Manual motor starter - 0.25A | MS116-0,25 | ABB | 91.045.016 | 1 | /04.a.3 |
| -FA2 | Manual motor starter - 1A | MS116-1,00 | ABB | 91.045.019 | 1 | /04.b.6 |
| -FA4 | Manual motor starter - 1A | MS116-1,00 | ABB | 91.045.019 | 1 | /04.a.5 |
| -SQ1 | Inductive limit switch Sn=1,5mm | JPS 30D 081.5 PNOFC | BALLUFF | 91.172.009 | 1 | /08.0 |
| -SQ14 | Analog sensor of distance - 1-4mm, M12 | BAW M12MF2-UAC40F-BP00,2-GS08 | BALLUFF | 91.172.017 | 1 | /12.a.8 |
| -SN1 | Lineare incrementa encoder - 10-30VDC/5V TTL line driver | LMIX2-026-08.0-1-01 | ELGO | 91.270.006 | 1 | /13.6 |
| -FU1 | Tube fuse - 2A/250V, slow, 5x20 | T2A/250V | ESKA | 91.230.001 | 1 | /04.b.0 |
| -FU2 | Tube fuse - 2A/250V, slow, 5x20 | T2A/250V | ESKA | 91.230.001 | 1 | /05.5 |
| -FU3 | Tube fuse - 2A/250V, slow, 5x20 | T2A/250V | ESKA | 91.230.001 | 1 | /05.6 |
| -FU4 | Tube fuse - 6,3A/250V, slow, 5x20 | T6,3A/250V | ESKA | 91.230.002 | 1 | /05.7 |
| -FU5 | Tube fuse - 2A/250V, slow, 5x20 | T2A/250V | ESKA | 91.230.001 | 1 | /05.9 |
| -RP1 | Potentiometer 5k | TP195 4x7/N20A | GES-ELECTRONICS, a.s. | 91.283.015 | 1 | /11.3 |
| -RP2 | Potentiometer 5k | TP195 4x7/N20A | GES-ELECTRONICS, a.s. | 91.283.015 | 1 | /12.a.8 |
| -RP3 | Potentiometer 5k | TP195 4x7/N20A | GES-ELECTRONICS, a.s. | 91.283.015 | 1 | /12.a.8 |
| -RCF1 | RCF filter | FBOPR1624 | Ing. Miroslav Vlček | 91.041.015 | 1 | /04.a.2 |
| -RCF2 | RCF filter | FBOPR1624 | Ing. Miroslav Vlček | 91.041.015 | 1 | /04.b.6 |
| -RCF3 | RCF filter | FBOPR1624 | Ing. Miroslav Vlček | 91.041.015 | 2 | /04.a.5 |
| -RCF4 | RCF filter | FBOPR1624 | Ing. Miroslav Vlček | 91.041.015 | 1 | /03.a.6 |
| -RCF11 | RCF filter | FBOPR1624 | Ing. Miroslav Vlček | 91.041.015 | 2 | /04.6 |
| -RCF12 | RCF filter | FBOPR1624 | Ing. Miroslav Vlček | 91.041.015 | 2 | /04.7 |
| -RCF13 | RCF filter | FBOPR1624 | Ing. Miroslav Vlček | 91.041.015 | 1 | /04.6 |
| -RCF14 | RCF filter | FBOPR1624 | Ing. Miroslav Vlček | 91.041.015 | 1 | /04.7 |
| -FA1 | Auxiliary Contact Block - 1xNO+1xNC | HKF1-11 | ABB | 91.046.002 | 1 | /04.a.3 |
| -FA2 | Auxiliary Contact Block - 1xNO+1xNC | HKF1-11 | ABB | 91.046.002 | 1 | /04.b.6 |
| -FA4 | Auxiliary Contact Block - 1xNO+1xNC | HKF1-11 | ABB | 91.046.002 | 1 | /04.a.5 |
| -FU1 | Fuse terminal | WK4/THSi5U | WIELAND | 91.251.102 | 1 | /04.b.0 |

The manufacturer reserves right to use an equivalent replacement device.

01

# Parts list

| Device identification | Device description | Type number | Manufacturer | Part number | Quantity | Location (page.column) |
|---|---|---|---|---|---|---|
| -FU2 | Fuse terminal | WK4/THSi5U | WIELAND | 91.251.102 | 1 | /05.5 |
| -FU3 | Fuse terminal | WK4/THSi5U | WIELAND | 91.251.102 | 1 | /05.6 |
| -FU4 | Fuse terminal | WK4/THSi5U | WIELAND | 91.251.102 | 1 | /05.7 |
| -FU5 | Fuse terminal | WK4/THSi5U | WIELAND | 91.251.102 | 1 | /05.9 |
| -FU7 | Fuse terminal | WK4/THSi5U | WIELAND | 91.251.102 | 1 | /13.1 |
| -FU7 | Tube fuse - 200mA/250V, slow, 5x20 | T200mA/250V | ESKA | 91.230.037 | 1 | /13.1 |
| -HL1 | Green light for Eaton adapter | M22-LED-G | EATON | 91.061.023 | 1 | /07.a.9 |
| -HL2 | White light for Eaton adapter | M22-LED-W | EATON | 91.061.034 | 1 | /10.7 |
| -KM1 | Minicontactor - 4kW/400V, 3P | B6S-30-10-1.7-71 | ABB | 91.040.048 | 1 | /06.1 |
| -KM2 | Minicontactor - 4kW/400V, 3P | B6S-30-01-1.7-71 | ABB | 91.040.049 | 1 | /06.3 |
| -KM3 | Minicontactor - 4kW/400V, 3P | B6S-30-01-1.7-71 | ABB | 91.040.049 | 1 | /06.4 |
| -KM3 | Minicontactor - 4kW/400V, 3P | B6S-30-10-1.7-71 | ABB | 91.040.048 | 1 | /03.a.5 |
| -KM4 | Minicontactor - 4kW/400V, 3P | B6S-30-10-1.7-71 | ABB | 91.040.048 | 1 | /06.6 |
| -KM11 | Contactor - 11kW/400V, 3P | AF26-30-00-11 | ABB | 91.040.052 | 1 | /10.6 |
| -KM11 | Auxiliary Contact Block - 1xNC | CA4-01 | ABB | 91.041.043 | 1 | /10.6 |
| -KM12 | Contactor - 11kW/400V, 3P | AF26-30-00-11 | ABB | 91.040.052 | 1 | /10.7 |
| -KM12 | Auxiliary Contact Block - 1xNC | CA4-01 | ABB | 91.041.043 | 1 | /10.7 |
| -KM13 | Contactor - 5,5kW/400V, 3P | AF12-30-01-11 | ABB | 91.040.051 | 1 | /10.9 |
| -KM13 | Auxiliary Contact Block - 1xNO | CA4-10 | ABB | 91.041.044 | 1 | /10.9 |
| -KM14 | Contactor - 5,5kW/400V, 3P | AF12-30-01-11 | ABB | 91.040.051 | 1 | /10.9 |
| -KM14 | Auxiliary Contact Block - 1xNO | CA4-10 | ABB | 91.041.044 | 1 | /10.9 |
| -PA1 | Fuse switch disconnector E-90 - 3P | E 93/32 | ABB | 91.241.014 | 1 | /04.a.1 |
| -PA2 | Fuse holder E-90 - 1P | E 91/32 | ABB | 91.241.012 | 1 | /04.b.2 |
| -RE1 | Pluggable interface relay CR-P | CR-P024DC2 | ABB | 91.051.049 | 1 | /12.a.5 |
| -RE1 | CR-P Standard socket | CR-PSS | ABB | 91.051.048 | 1 | /12.a.5 |
| -RE2 | Pluggable interface relay CR-P | CR-P024DC2 | ABB | 91.051.049 | 1 | /12.a.5 |
| -RE2 | CR-P Standard socket | CR-PSS | ABB | 91.051.048 | 1 | /12.a.5 |
| -SB7 | Switch 2 positions | M22 - WKV | EATON | 91.060.037 | 1 | /13.1 |

The manufacturer reserves right to use an equivalent replacement device.

02

# Parts list

| Device identification | Device description | Type number | Manufacturer | Part number | Quantity | Location (page.column) |
|---|---|---|---|---|---|---|
| -SB7 | Attaching adapter + 1NO | M22-AK10 | EATON | 91.061.021 | 1 | /13.1 |
| -SB7 | Carrier plates Moeller | M22S-ST-X | EATON | 91.062.009 | 1 | /13.1 |
| -SB501 | Emergency-stop mushroom push - button + 3xNC | YW1B-V4E02R | IDEC | 91.060.084 | 1 | /10.2 |
| =OP1-SA1 | Head of 3 positional switch | M22-WRK3 | EATON | 91.060.051 | 1 | /09.3 |
| =OP1-SA1 | NO contact for Eaton adapter | M22-K10 | EATON | 91.061.022 | 1 | /09.3 |
| =OP1-SA1 | Attaching adapter + 1NO | M22-AK10 | EATON | 91.061.021 | 1 | /09.3 |
| =OP1-SB1 | Green translucent switch head | M22-DL-G | EATON | 91.060.031 | 1 | /09.1 |
| =OP1-SB1 | Attaching adapter + 1NO | M22-AK10 | EATON | 91.061.021 | 1 | /09.1 |
| =OP1-SB2 | Attaching adapter + 1NO | M22-AK10 | EATON | 91.061.021 | 1 | /09.2 |
| =OP1-SB2 | Switch head - black | M22-D-S | EATON | 91.060.035 | 1 | /09.2 |
| =OP1-SB8 | Attaching adapter + 1NO | M22-AK10 | EATON | 91.061.021 | 1 | /10.3 |
| =OP1-SB8 | Yellow translucent switch head | M22-DL-Y | EATON | 91.060.053 | 1 | /10.3 |
| =R1-QS1 | Disconnector - 3P,40A | OT40FT3 | ABB | 91.170.019 | 1 | /04.0 |
| =R1-QS1 | Terminal shroud | OTS40T3 | ABB | 91.170.017 | 1 | /04.0 |
| -SQ21 | Safety limit switch - 2xNC | QKS8 | KEDU | 91.173.012 | 1 | /10.2 |
| -PA1 | Cylindric fuse - 12A, 10x38 fast, gG charakteristic | PV10 12A gG | OEZ | 91.231.007 | 3 | /04.a.1 |
| -PA2 | Cylindric fuse - 16A, 10x38 fast, gG charakteristic | PV10 16A gG | OEZ | 91.230.020 | 1 | /04.b.2 |
| -PA4 | Fuse switch disconnector E-90 - 3P | E 93/32 | ABB | 91.241.014 | 1 | /05.1 |
| -PA4 | Cylindric fuse - 2A, 10x38 fast, gG charakteristic | PV10 2A gG | OEZ | 91.230.034 | 3 | /05.1 |
| -SQ4 | Limit switch - 1NC+1NO, M20, slow | D4N-4A32 | OMRON | 91.173.010 | 1 | /08.3 |
| -SQ2 | Limit switch - 1NO + 1NC, roller, M2, snap action | FR 605-M2 | PIZZATO | 91.173.009 | 1 | /08.1 |
| -SQ3 | Limit switch - 1NO + 1NC, roller, M2, snap action | FR 605-M2 | PIZZATO | 91.173.009 | 1 | /08.2 |
| -FM2 | I / O Easy Connector (44 I / O); B2 CN1,ASD-IF-DS444 | ASD-IF-DS444 | DELTA ELECTRONICS, INC. | 91.143.043 | 1 | /12.a.0 |
| -FM2 | 5m; low inertia (C3) 100W ~ 750W | ASDBCAEN0005 | DELTA ELECTRONICS, INC. | 91.995.769 | 1 | /12.a.0 |
| -FM2 | 5m; low inertia (C3) 100W ~ 750W | ASDBCAPW0305 | DELTA ELECTRONICS, INC. | 91.995.768 | 1 | /12.a.0 |
| =R1-QS1 | Handle switch - black | OHBS2RJ | ABB | 91.180.015 | 1 | /04.0 |
| -BM1 | Safety relay - 4xNO, 1.5s, 24VDC | RT7 A | ABB | 91.051.054 | 1 | /10.4 |
| -CU1 | Control circuit | PRO-5.X | Bomar | 91.995.221 | 1 | /12.0 |

The manufacturer reserves right to use an equivalent replacement device.

02.a

# Parts list

| Device identification | Device description | Type number | Manufacturer | Part number | Quantity | Location (page.column) |
|---|---|---|---|---|---|---|
| -FM1 | AC motor drive - 3.7kW, 3x400VAC | VFD037E43A | DELTA ELECTRONICS, INC. | 91.012.094 | 1 | /11.0 |
| -FM2 | Servo ASD-B2-0421-B; 230 V; 1 phase; 400W | ASD-B2-0421-B | DELTA ELECTRONICS, INC. | 91.001.215 | 1 | /04.b.1 |
| -FM2 | Servo ASD-B2-0721-B; 230 V; 1 phase; 750W | ASD-B2-0721-B | DELTA ELECTRONICS, INC. | 91.001.225 | 1 | /12.a.0 |
| -PLC1 | PLC MPU SX2, output:relay | DVP20SX211T | DELTA ELECTRONICS, INC. | 91.995.758 | 1 | /12.a.6 |
| -RCF0 | Line filter | FFA 4-32-400 | Ing. Miroslav Vlček | 91.041.022 | 1 | /04.3 |
| -ZD1 | Power supply - 400VAC/24VDC, 10A | CP-T 24/10 | ABB | 91.085.030 | 1 | /05.1 |
| -M6 | Fan 24VDC, 154CFM | RDH1238 B2 | Xinruilian Electronic Co. | 91.015.126 | 1 | /06.8 |

The manufacturer reserves right to use an equivalent replacement device.

OP1

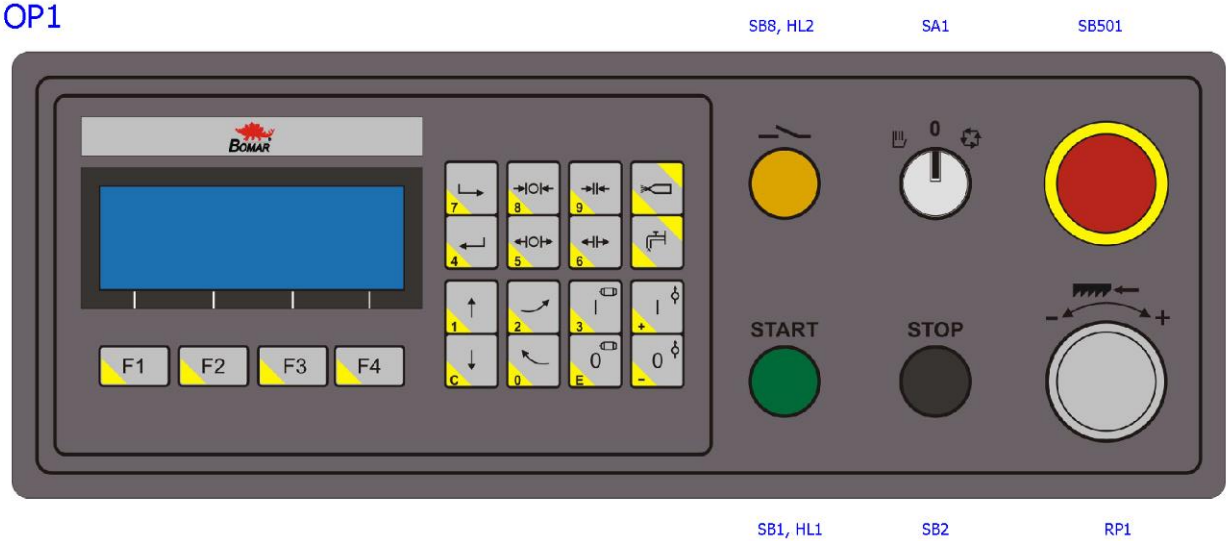


02.c

| | | | | | |
|---|---|---|---|---|---|
| BOMAR, s.r.o.<br>Těžební 1236/1<br>CZ 627 00, Brno | Stroj/Machine/Maschine:<br>TOPLINE 510.350 DGH | Název stránky/Name page/Name seiten:<br>Ovládací panel na rozvaděči/Control panel/Bedienpult | Číslo dok./Doc.No/Anzahl der Dokumente.: | ES-TL100-201-V1.3 | List/Page/Seite: 03 |
| | | | Napájení/Power supply/Einspeisung: | 3x400V + PE + N, 50Hz, TN-S | |
| | | | Zpracoval/Processed /Hat verarbeitet: | Pavlík | Listů/Pages/Seiten: 21 |
| | | | Datum/Date/Datum: | 13.5.2014 | |

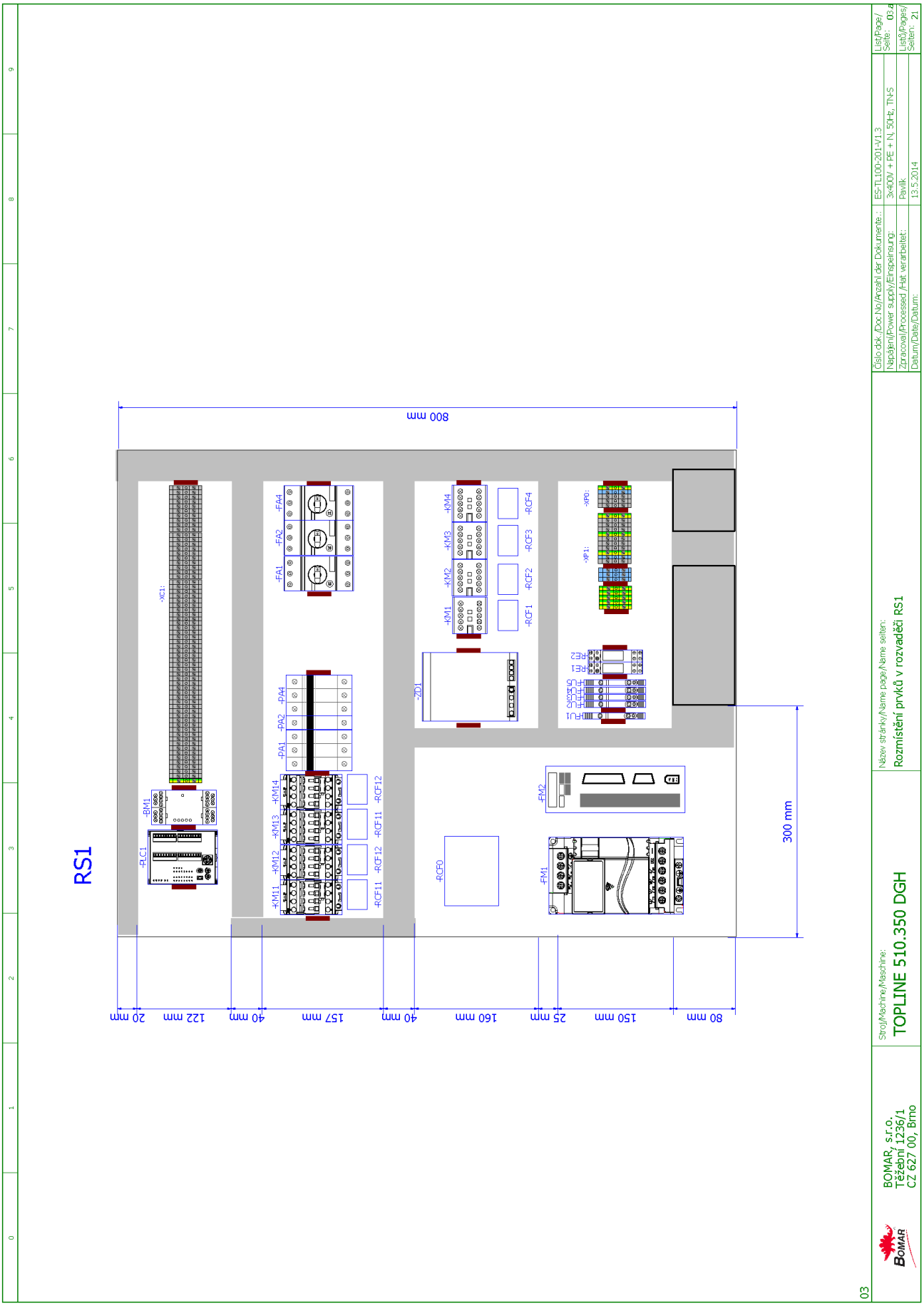
RS1
800 mm
300 mm
20 mm
122 mm
40 mm
157 mm
40 mm
160 mm
25 mm
150 mm
80 mm
-XC1:
-BM1
-PLC1
-FA1
-FA2
-FA4
-PA1
-PA2
-PA4
-KM11
-KM12
-KM13
-KM14
-RCF11
-RCF12
-KM1
-KM2
-KM3
-KM4
-RCF1
-RCF2
-RCF3
-RCF4
-ZD1
-XP1:
-XP0:
-RCF0
-FM1
-FM2
Číslo dok./Doc.No./Anzahl der Dokumente:
E5-TL100-201-V1.3
Napájení/Power supply/Einspeisung:
3x400V + PE + N, 50Hz, TN-S
Zpracoval/Processed /Hat verarbeitet:
Pavlík
Datum/Date/Datum:
13.5.2014
List/Page/Seite: 03
List3/Pages/Seiten: 21
Název stránky/Name page/Name seiten:
Rozmístění prvků v rozvaděči RS1
Stroj/Machine/Maschine:
TOPLINE 510.350 DGH
BOMAR, s.r.o.
Těžební 1236/1
CZ 627 00, Brno
03

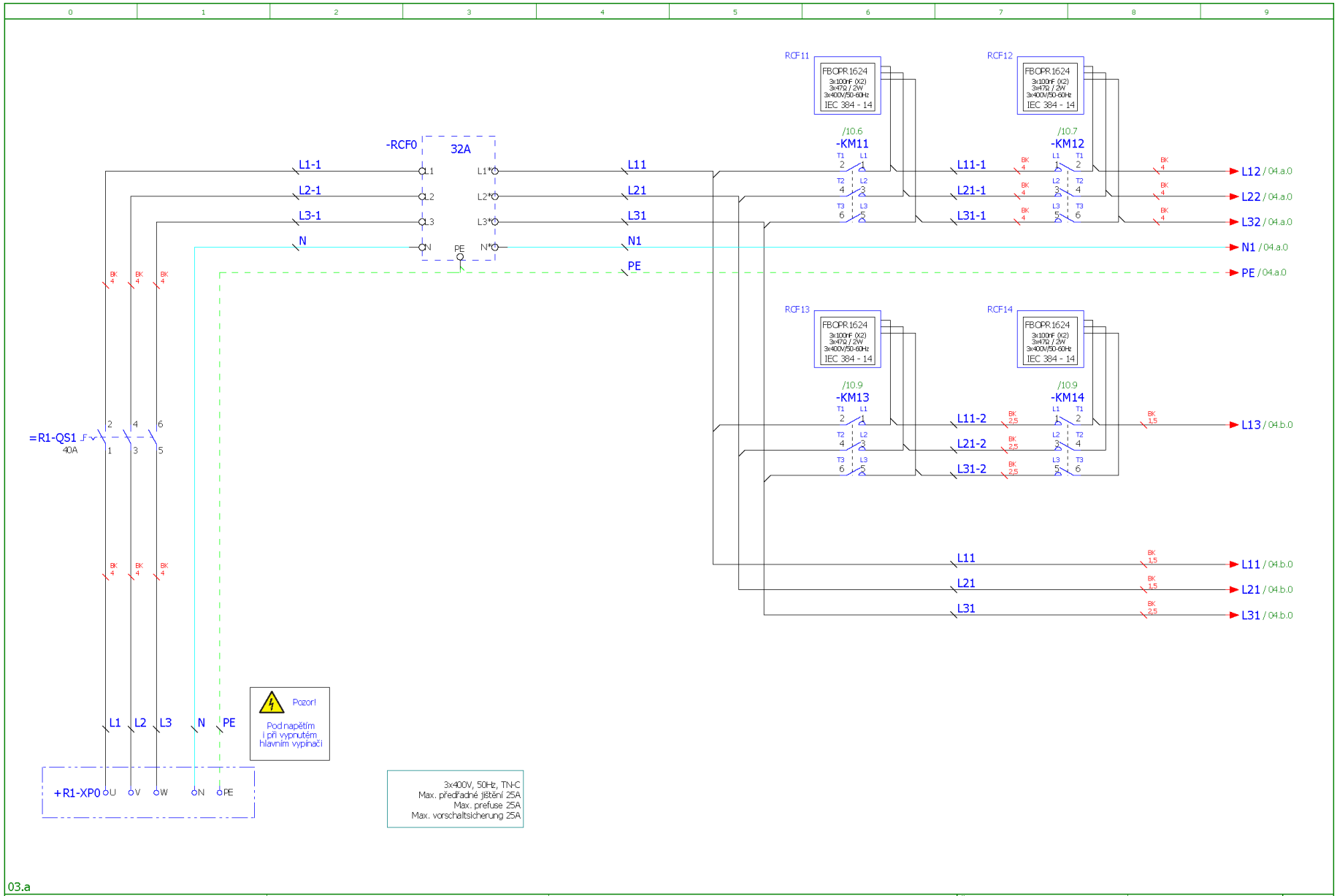


03.a

| | | | | | |
|---|---|---|---|---|---|
| BOMAR, s.r.o.<br>Těžební 1236/1<br>CZ 627 00, Brno | Stroj/Machine/Maschine:<br>TOPLINE 510.350 DGH | Název stránky/Name page/Name seiten:<br>Silová část / Power part / Feld partie | Číslo dok./Doc.No/Anzahl der Dokumente.: | ES-TL100-201-V1.3 | List/Page/Seite: 04 |
| | | | Napájení/Power supply/Einspeinsung: | 3x400V + PE + N, 50Hz, TN-S | |
| | | | Zpracoval/Processed /Hat verarbeitet: | Pavlík | List3/Pages/Seiten: 21 |
| | | | Datum/Date/Datum: | 13.5.2014 | |

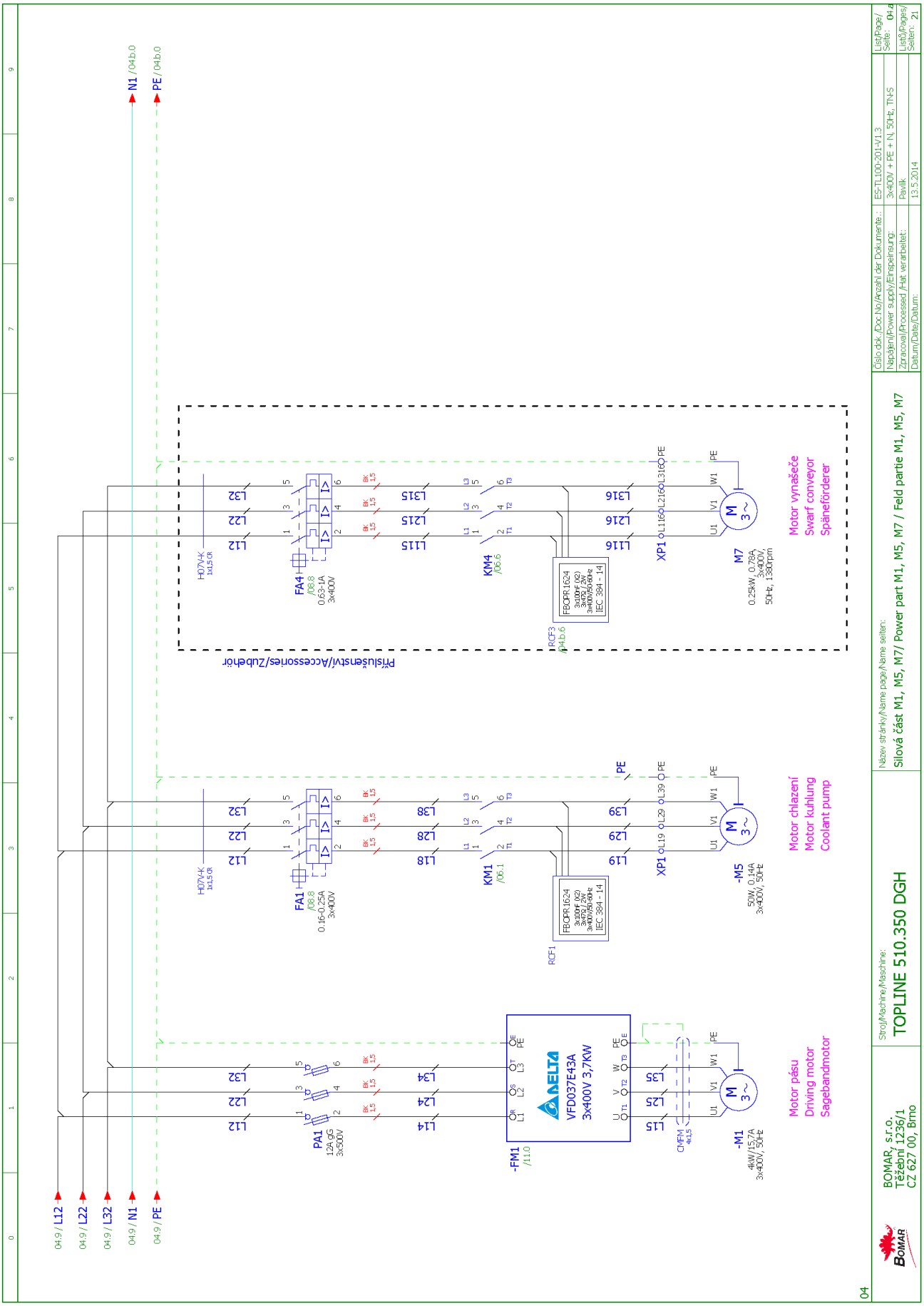
04.9 / L12
04.9 / L22
04.9 / L32
04.9 / N1
04.9 / PE
N1 /04.b.0
PE /04.b.0
PA1
12A gG
3x500V
-FM1
/11.0
DELTA
VFD037E43A
3x400V 3,7KW
-M1
4kW/15,7A
3x400V, 50Hz
Motor pásu
Driving motor
Sagebandmotor
FA1
/08.8
0.16-0.25A
3x400V
KM1
/06.1
RCF1
FBCPR1624
-M5
50W, 0.14A
3x400V, 50Hz
Motor chlazení
Motor kuhlung
Coolant pump
FA4
/08.8
0.63-1A
3x400V
KM4
/06.6
RCF3
/04.b.6
XP1
M7
0.25kW, 0.78A
3x400V,
50Hz, 1380rpm
Motor vynašeče
Swarf conveyor
Späneförderer
Příslušenství/Accessories/Zubehör
Číslo dok./Doc.No./Anzahl der Dokumente:
E5-TL100-201-V1.3
Napájení/Power supply/Einspeisung:
3x400V + PE + N, 50Hz, TN-S
Zpracoval/Processed /Hat verarbeitet:
Pavlik
Datum/Date/Datum:
13.5.2014
List/Page/Seite: 04.a
List3/Pages/Seiten: 21
Název stránky/Name page/Name seiten:
Silová část M1, M5, M7/ Power part M1, M5, M7 / Feld partie M1, M5, M7
Stroj/Machine/Maschine:
TOPLINE 510.350 DGH
BOMAR, s.r.o.
Těžební 1236/1
CZ 627 00, Brno
04

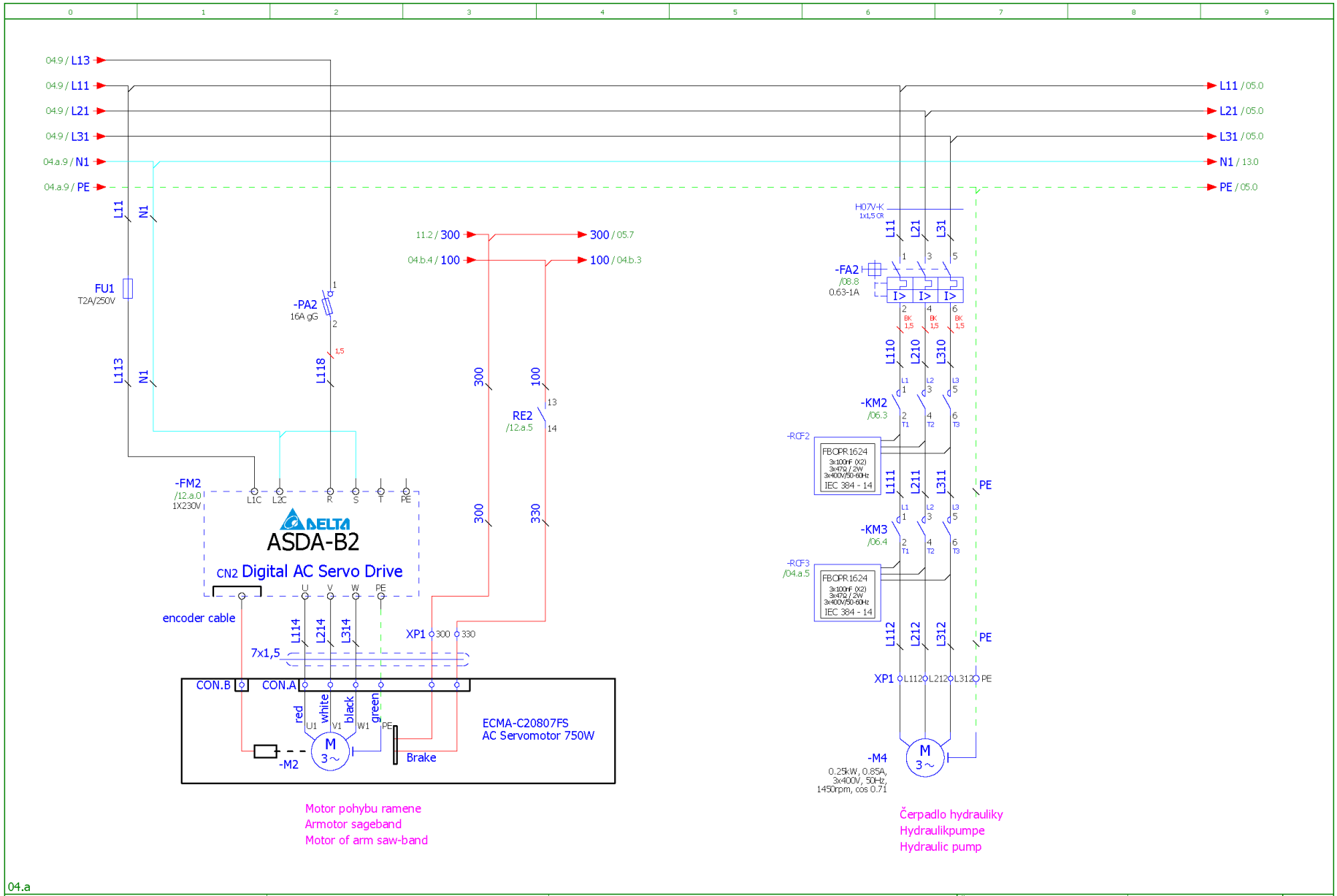


04.a

| | | | | | |
|---|---|---|---|---|---|
| BOMAR, s.r.o.<br>Těžební 1236/1<br>CZ 627 00, Brno | Stroj/Machine/Maschine:<br>TOPLINE 510.350 DGH | Název stránky/Name page/Name seiten:<br>Silová část M2, M4 / Power part M2, M4 / Feld partie M2, M4 | Číslo dok./Doc.No/Anzahl der Dokumente.: | ES-TL100-201-V1.3 | List/Page/Seite: 04.b |
| | | | Napájení/Power supply/Einspeinsung: | 3x400V + PE + N, 50Hz, TN-S | |
| | | | Zpracoval/Processed /Hat verarbeitet: | Pavlík | List3/Pages/Seiten: 21 |
| | | | Datum/Date/Datum: | 13.5.2014 | |

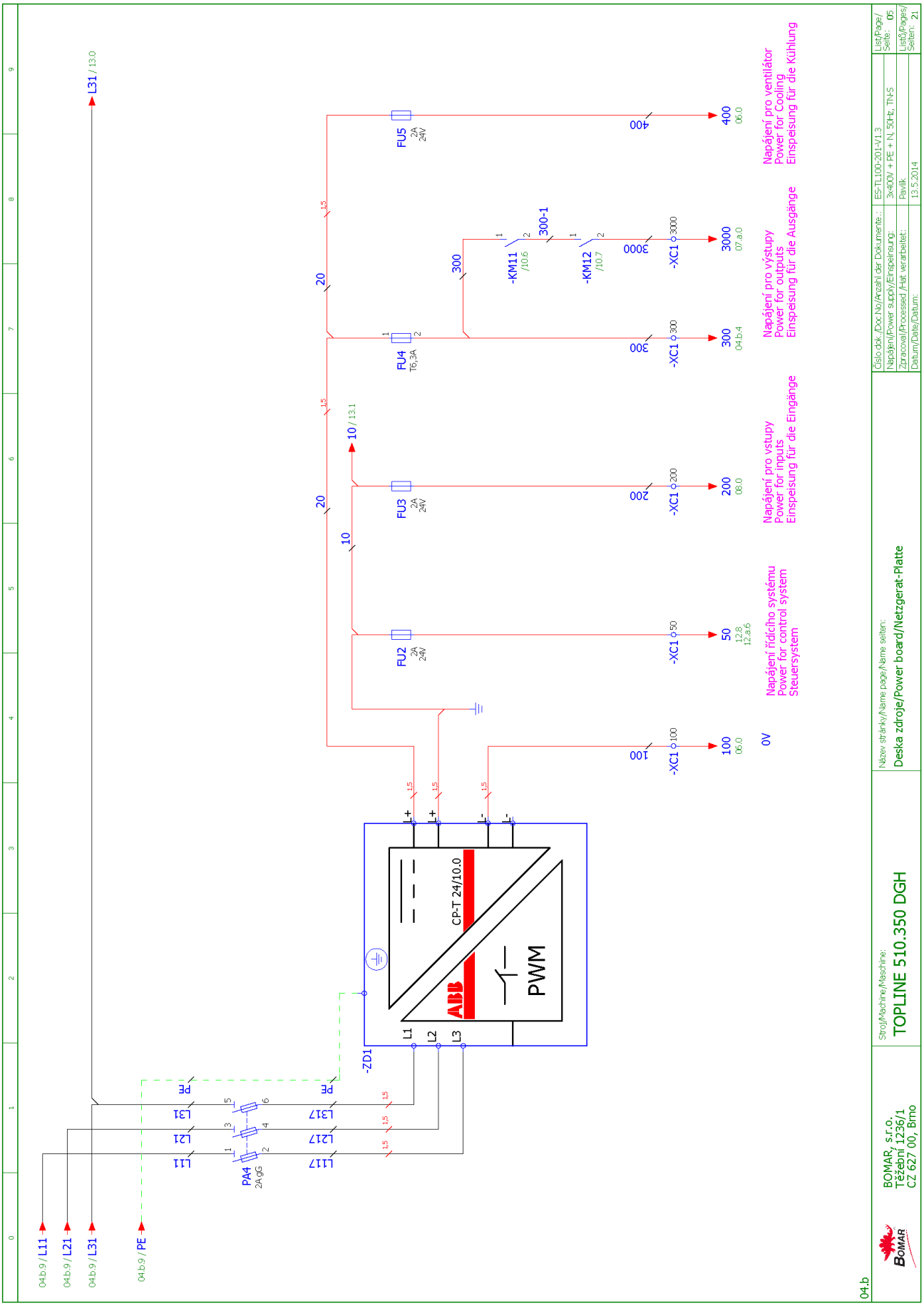
L31 / 13.0
04.b.9 / L11
04.b.9 / L21
04.b.9 / L31
04.b.9 / PE
PA4
2A gG
L11
L21
L31
L117
L217
L317
PE
-ZD1
L1
L2
L3
ABB
CP-T 24/10.0
PWM
L+
L-
FU2
2A
24V
FU3
2A
24V
FU4
T6,3A
FU5
2A
24V
10 / 13.1
10
20
300
300-1
-KM11
/10.6
-KM12
/10.7
-XC1
100
200
300
3000
400
50
12.8
12.a.6
06.0
08.0
04.b.4
07.a.0
0V
Napájení řídicího systému
Power for control system
Steuersystem
Napájení pro vstupy
Power for inputs
Einspeisung für die Eingänge
Napájení pro výstupy
Power for outputs
Einspeisung für die Ausgänge
Napájení pro ventilátor
Power for Cooling
Einspeisung für die Kühlung
04.b
BOMAR, s.r.o.
Těžební 1236/1
CZ 627 00, Brno
Stroj/Machine/Maschine:
TOPLINE 510.350 DGH
Název stránky/Name page/Name seiten:
Deska zdroje/Power board/Netzgerat-Platte
Číslo dok./Doc.No/Anzahl der Dokumente:
E5-TL100-201-V1.3
List/Page/Seite: 05
Napájení/Power supply/Einspeisung:
3x400V + PE + N, 50Hz, TN-S
List3/Pages/Seiten: 21
Zpracoval/Processed /Hat verarbeitet:
Pavlik
Datum/Date/Datum:
13.5.2014

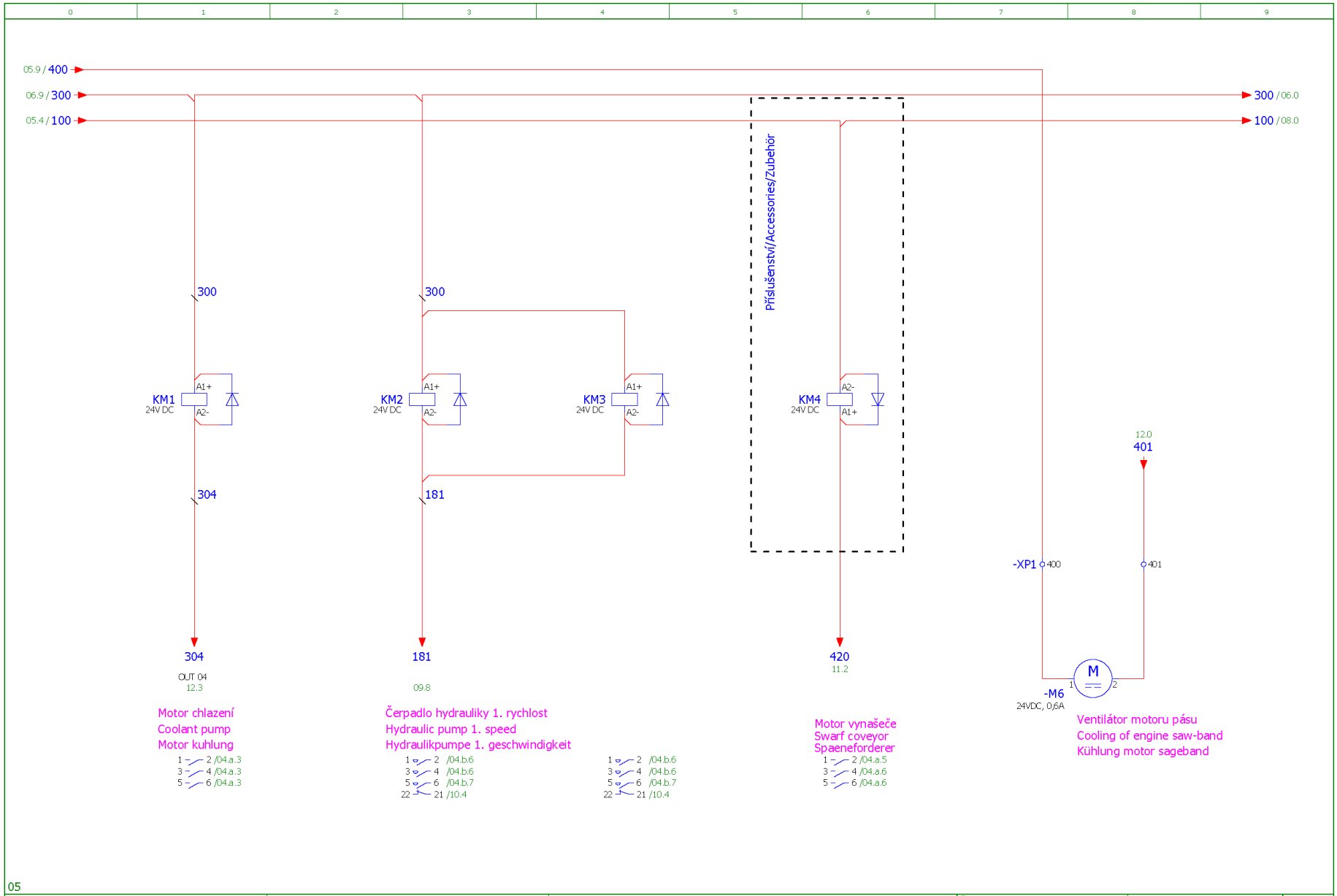


05

| | | | | |
|---|---|---|---|---|
| BOMAR, s.r.o.<br>Těžební 1236/1<br>CZ 627 00, Brno | Stroj/Machine/Maschine:<br>TOPLINE 510.350 DGH | Název stránky/Name page/Name seiten:<br>Stykače motorů/Motor contactor/Motor-Schutzschalter | Číslo dok./Doc.No/Anzahl der Dokumente.: ES-TL100-201-V1.3<br>Napájení/Power supply/Einspeinsung: 3x400V + PE + N, 50Hz, TN-S<br>Zpracoval/Processed /Hat verarbeitet: Pavlík<br>Datum/Date/Datum: 13.5.2014 | List/Page/Seite: 06<br>Listů/Pages/Seiten: 21 |

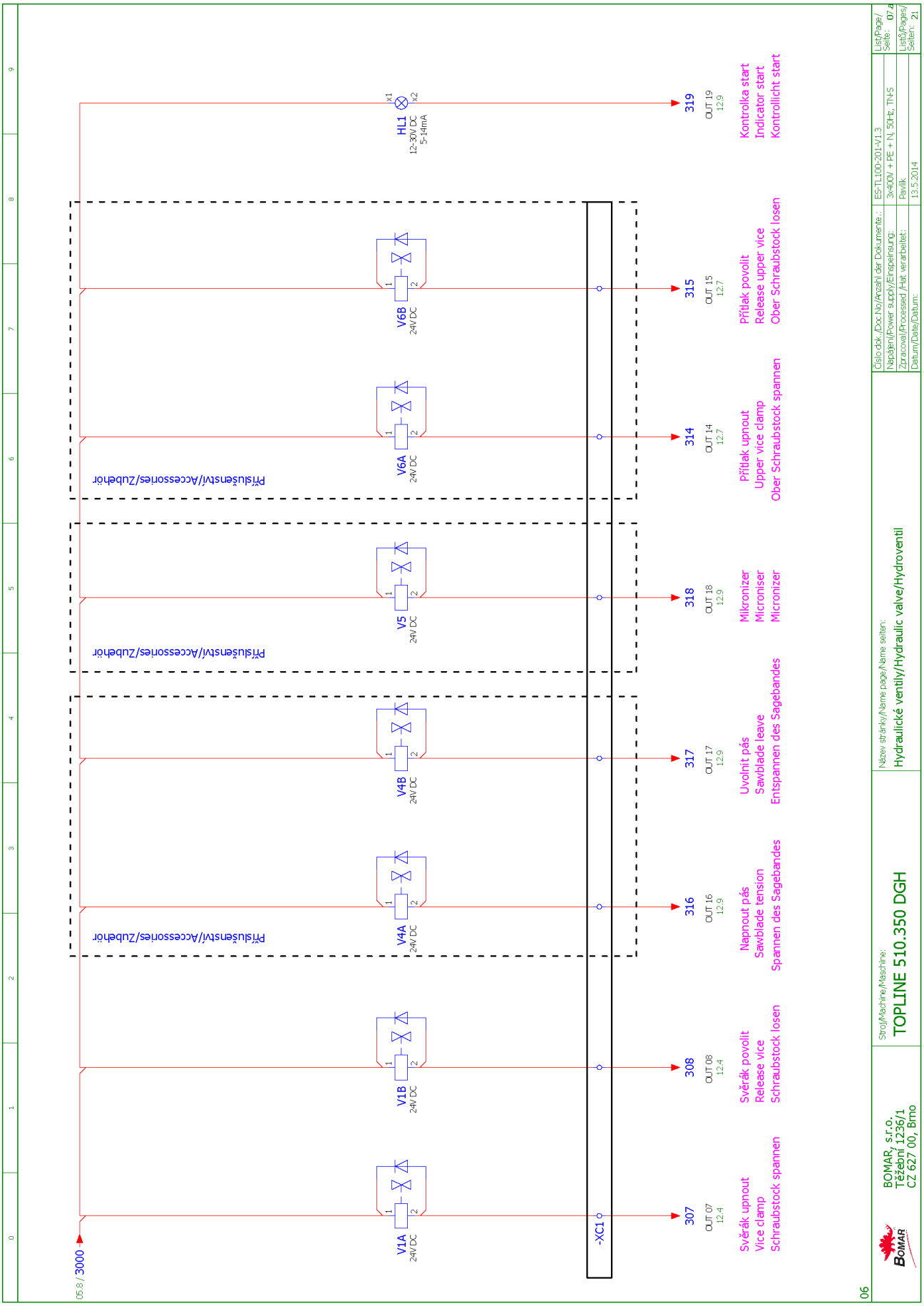
05.8 / 3000
V1A 24V DC
V1B 24V DC
V4A 24V DC
V4B 24V DC
V5 24V DC
V6A 24V DC
V6B 24V DC
Příslušenství/Accessories/Zubehör
Příslušenství/Accessories/Zubehör
Příslušenství/Accessories/Zubehör
-XC1
307 OUT 07 12.4
308 OUT 08 12.4
316 OUT 16 12.9
317 OUT 17 12.9
318 OUT 18 12.9
314 OUT 14 12.7
315 OUT 15 12.7
319 OUT 19 12.9
HL1 12-30V DC 5-14mA
Svěrák upnout
Vice clamp
Schraubstock spannen
Svěrák povolit
Release vice
Schraubstock losen
Napnout pás
Sawblade tension
Spannen des Sagebandes
Uvolnit pás
Sawblade leave
Entspannen des Sagebandes
Mikronizer
Microniser
Micronizer
Přítlak upnout
Upper vice clamp
Ober Schraubstock spannen
Přítlak povolit
Release upper vice
Ober Schraubstock losen
Kontrolka start
Indicator start
Kontrollicht start
06
BOMAR, s.r.o.
Těžební 1236/1
CZ 627 00, Brno
Stroj/Machine/Maschine:
TOPLINE 510.350 DGH
Název stránky/Name page/Name seiten:
Hydraulické ventily/Hydraulic valve/Hydroventil
Číslo dok./Doc.No/Anzahl der Dokumente:
E5-TL100-201-V1.3
Napájení/Power supply/Einspeisung:
3x400V + PE + N, 50Hz, TN-S
Zpracoval/Processed /Hat verarbeitet:
Pavlík
Datum/Date/Datum:
13.5.2014
List/Page/Seite: 07 a
List3/Pages/Seiten: 21

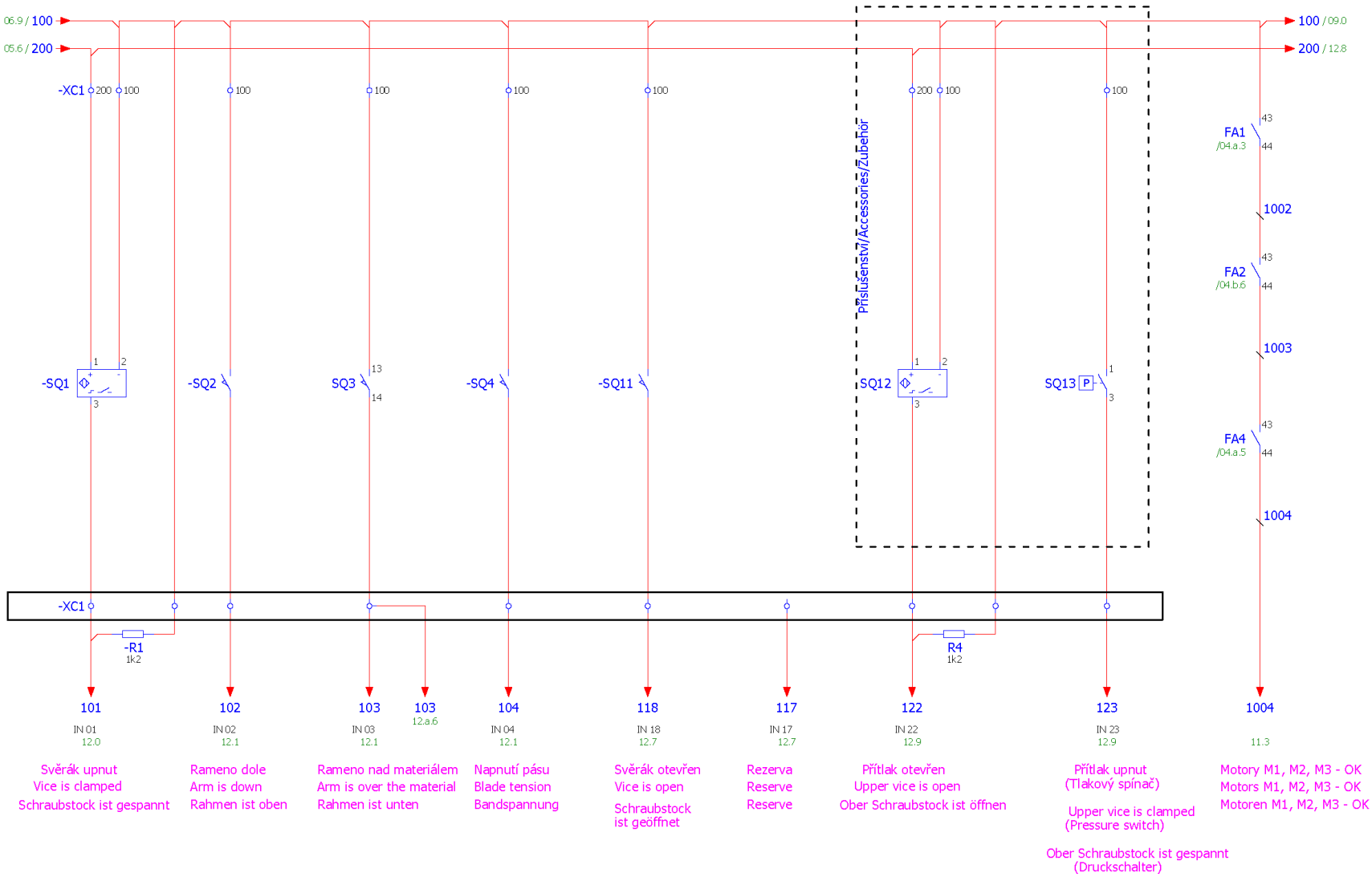


07.a

| | | | | |
|---|---|---|---|---|
| BOMAR, s.r.o.<br>Těžební 1236/1<br>CZ 627 00, Brno | Stroj/Machine/Maschine:<br>TOPLINE 510.350 DGH | Název stránky/Name page/Name seiten:<br>Vstupy/Inputs/Eingange | Číslo dok./Doc.No/Anzahl der Dokumente.: ES-TL100-201-V1.3<br>Napájení/Power supply/Einspeinsung: 3x400V + PE + N, 50Hz, TN-S<br>Zpracoval/Processed /Hat verarbeitet: Pavlík<br>Datum/Date/Datum: 13.5.2014 | List/Page/Seite: 08<br>List3/Pages/Seiten: 21 |

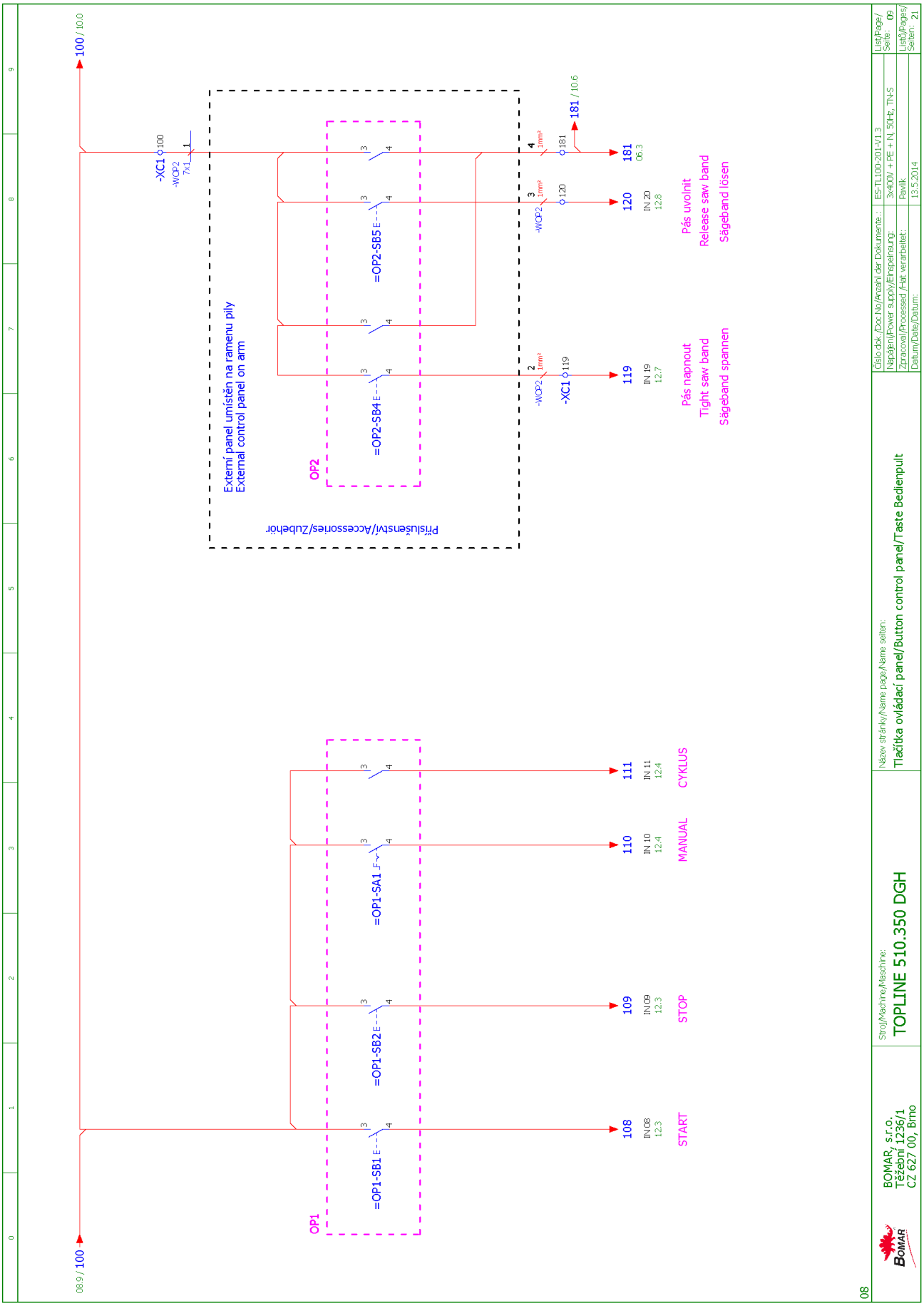
100 / 10.0
08.9 / 100
-XC1 100
-WOP2 7x1
Externí panel umístěn na ramenu pily
External control panel on arm
Příslušenství/Accessories/Zubehör
OP2
=OP2-SB4
=OP2-SB5
-WOP2 2 1mm²
-WOP2 3 1mm²
-WOP2 4 1mm²
-XC1 119
-XC1 120
-XC1 181
181 / 10.6
119
120
181
IN 19 12.7
IN 20 12.8
06.3
Pás napnout
Tight saw band
Sägeband spannen
Pás uvolnit
Release saw band
Sägeband lösen
OP1
=OP1-SB1
=OP1-SB2
=OP1-SA1
108
109
110
111
IN 08 12.3
IN 09 12.3
IN 10 12.4
IN 11 12.4
START
STOP
MANUAL
CYKLUS
08
BOMAR, s.r.o.
Těžební 1236/1
CZ 627 00, Brno
Stroj/Machine/Maschine:
TOPLINE 510.350 DGH
Název stránky/Name page/Name seiten:
Tlačítka ovládací panel/Button control panel/Taste Bedienpult
Číslo dok./Doc.No./Anzahl der Dokumente:
E5-TL100-201-V1.3
Napájení/Power supply/Einspeisung:
3x400V + PE + N, 50Hz, TN-S
Zpracoval/Processed /Hat verarbeitet:
Pavlík
Datum/Date/Datum:
13.5.2014
List/Page/Seite: 02
List3/Pages/Seiten: 21

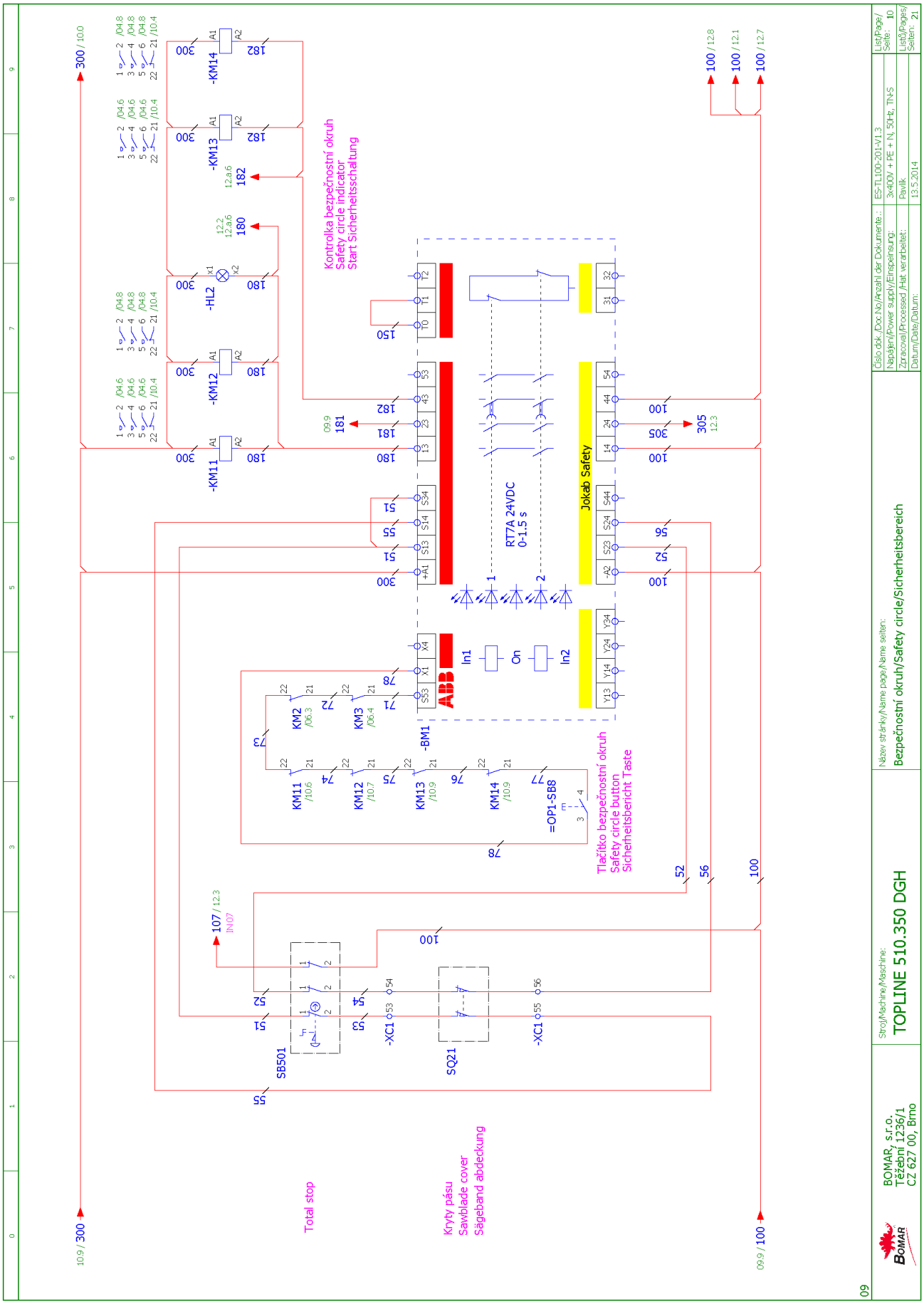
Kontrolka bezpečnostní okruh
Safety circle indicator
Start Sicherheitsschaltung
Jokab Safety
RT7A 24VDC
0-1.5 s
Tlačítko bezpečnostní okruh
Safety circle button
Sicherheitsbericht Taste
Total stop
Kryty pásu
Sawblade cover
Sägeband abdeckung
Číslo dok./Doc.No/Anzahl der Dokumente:
E5-TL100-201-V1.3
Napájení/Power supply/Einspeisung:
3x400V + PE + N, 50Hz, TN-S
Zpracoval/Processed /Hat verarbeitet:
Pavlík
Datum/Date/Datum:
13.5.2014
List/Page/Seite:
10
List/Pages/Seiten:
21
Název stránky/Name page/Name seiten:
Bezpečnostní okruh/Safety circle/Sicherheitsbereich
Stroj/Machine/Maschine:
TOPLINE 510.350 DGH
BOMAR, s.r.o.
Těžební 1236/1
CZ 627 00, Brno

PARAMETRY MĚNIČE FM1

00.10 - 1
01.00 - 73
01.01 - 50
01.02 - 400
01.09 - 2
01.10 - 2
03.00 - 1
03.01 - 22
04.12 - 17
07.00 - 6,5

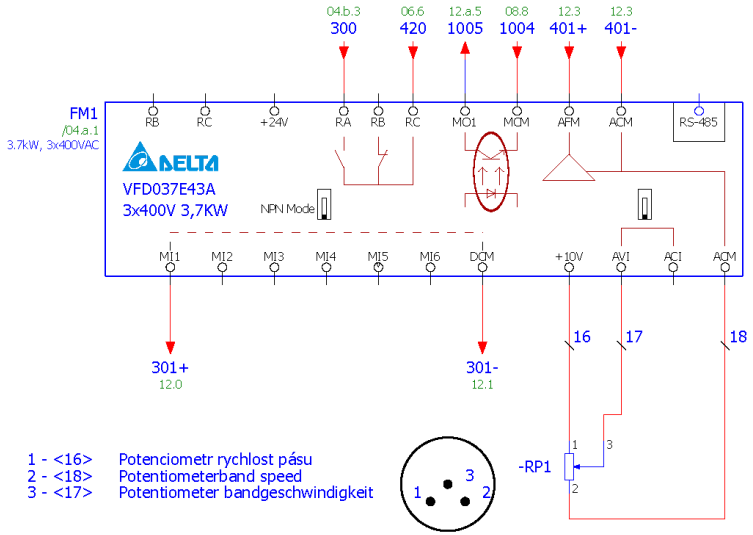


10

| | | | | |
|---|---|---|---|---|
| BOMAR, s.r.o.<br>Těžební 1236/1<br>CZ 627 00, Brno | Stroj/Machine/Maschine:<br>TOPLINE 510.350 DGH | Název stránky/Name page/Name seiten:<br>Frekvenční měnič/Speed controller/Frequenzumrichte | Číslo dok./Doc No/Anzahl der Dokumente.: ES-TL100-201-V1.3<br>Napájení/Power supply/Einspeisung: 3x400V + PE + N, 50Hz, TN-S<br>Zpracoval/Processed /Hat verarbeitet: Pavlík<br>Datum/Date/Datum: 13.5.2014 | List/Page/Seite: 11<br>Listů/Pages/Seiten: 21 |

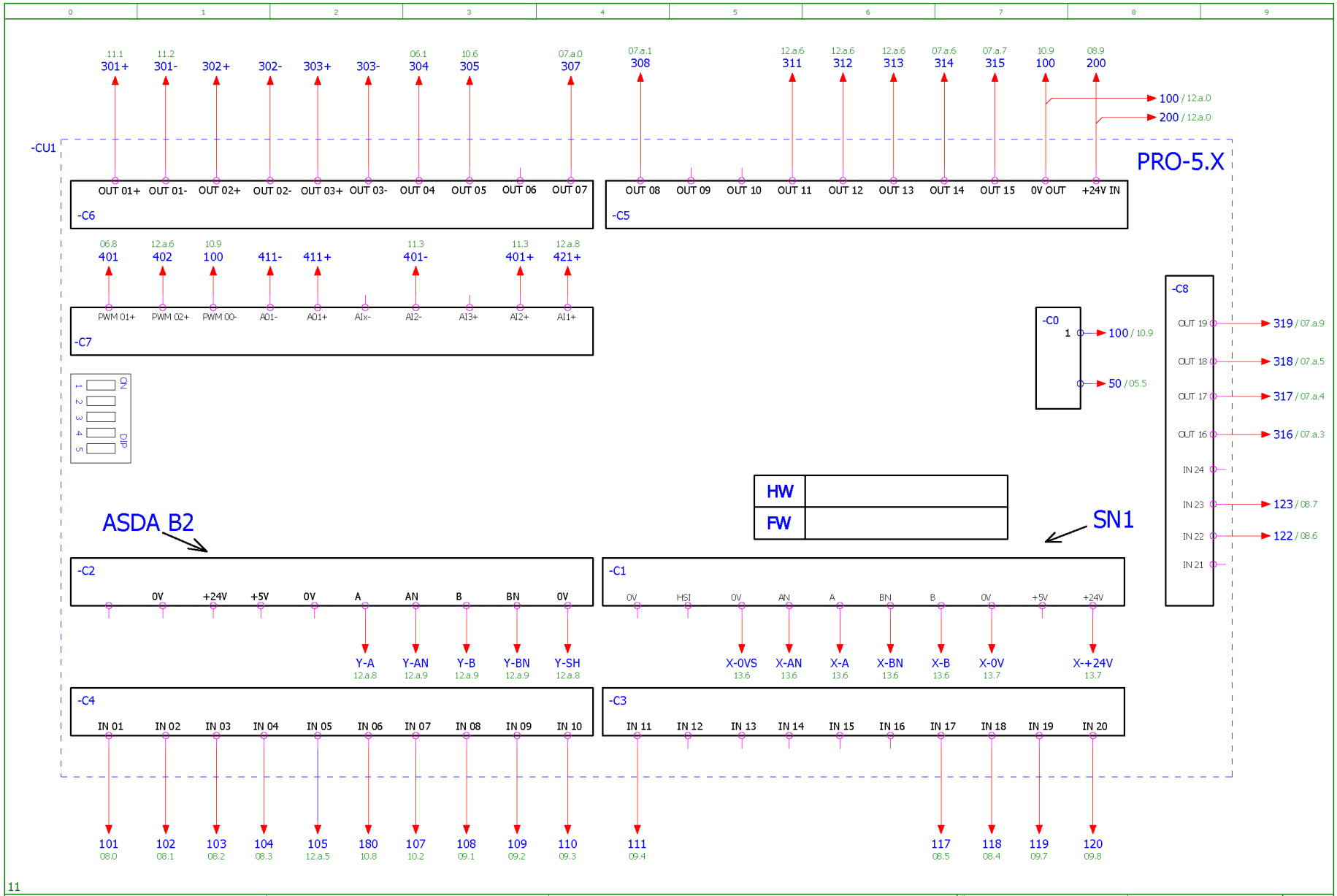
-CU1
PRO-5.X
-C6
OUT 01+ OUT 01- OUT 02+ OUT 02- OUT 03+ OUT 03- OUT 04 OUT 05 OUT 06 OUT 07
-C5
OUT 08 OUT 09 OUT 10 OUT 11 OUT 12 OUT 13 OUT 14 OUT 15 0V OUT +24V IN
-C7
PWM 01+ PWM 02+ PWM 00- A01- A01+ AIx- AI2- AI3+ AI2+ AI1+
-C0
-C8
OUT 19 OUT 18 OUT 17 OUT 16 IN 24 IN 23 IN 22 IN 21
HW
FW
ASDA B2
SN1
-C2
0V +24V +5V 0V A AN B BN 0V
Y-A Y-AN Y-B Y-BN Y-SH
-C1
0V HSI 0V AN A BN B 0V +5V +24V
X-0VS X-AN X-A X-BN X-B X-0V X-+24V
-C4
IN 01 IN 02 IN 03 IN 04 IN 05 IN 06 IN 07 IN 08 IN 09 IN 10
-C3
IN 11 IN 12 IN 13 IN 14 IN 15 IN 16 IN 17 IN 18 IN 19 IN 20
11.1 301+ 11.2 301- 302+ 302- 303+ 303- 06.1 304 10.6 305 07.a.0 307 07.a.1 308 12.a.6 311 12.a.6 312 12.a.6 313 07.a.6 314 07.a.7 315 10.9 100 08.9 200
100 / 12.a.0
200 / 12.a.0
06.8 401 12.a.6 402 10.9 100 411- 411+ 11.3 401- 11.3 401+ 12.a.8 421+
100 / 10.9
50 / 05.5
319 / 07.a.9
318 / 07.a.5
317 / 07.a.4
316 / 07.a.3
123 / 08.7
122 / 08.6
101 08.0 102 08.1 103 08.2 104 08.3 105 12.a.5 180 10.8 107 10.2 108 09.1 109 09.2 110 09.3 111 09.4 117 08.5 118 08.4 119 09.7 120 09.8
11
BOMAR, s.r.o.
Těžební 1236/1
CZ 627 00, Brno
Stroj/Machine/Maschine:
TOPLINE 510.350 DGH
Název stránky/Name page/Name seiten:
Řídící systém/Control system/Steuersystem
Číslo dok./Doc.No/Anzahl der Dokumente.: ES-TL100-201-V1.3
Napájení/Power supply/Einspeisung: 3x400V + PE + N, 50Hz, TN-S
Zpracoval/Processed /Hat verarbeitet: Pavlík
Datum/Date/Datum: 13.5.2014
List/Page/Seite: 12
List3/Pages/Seiten: 21

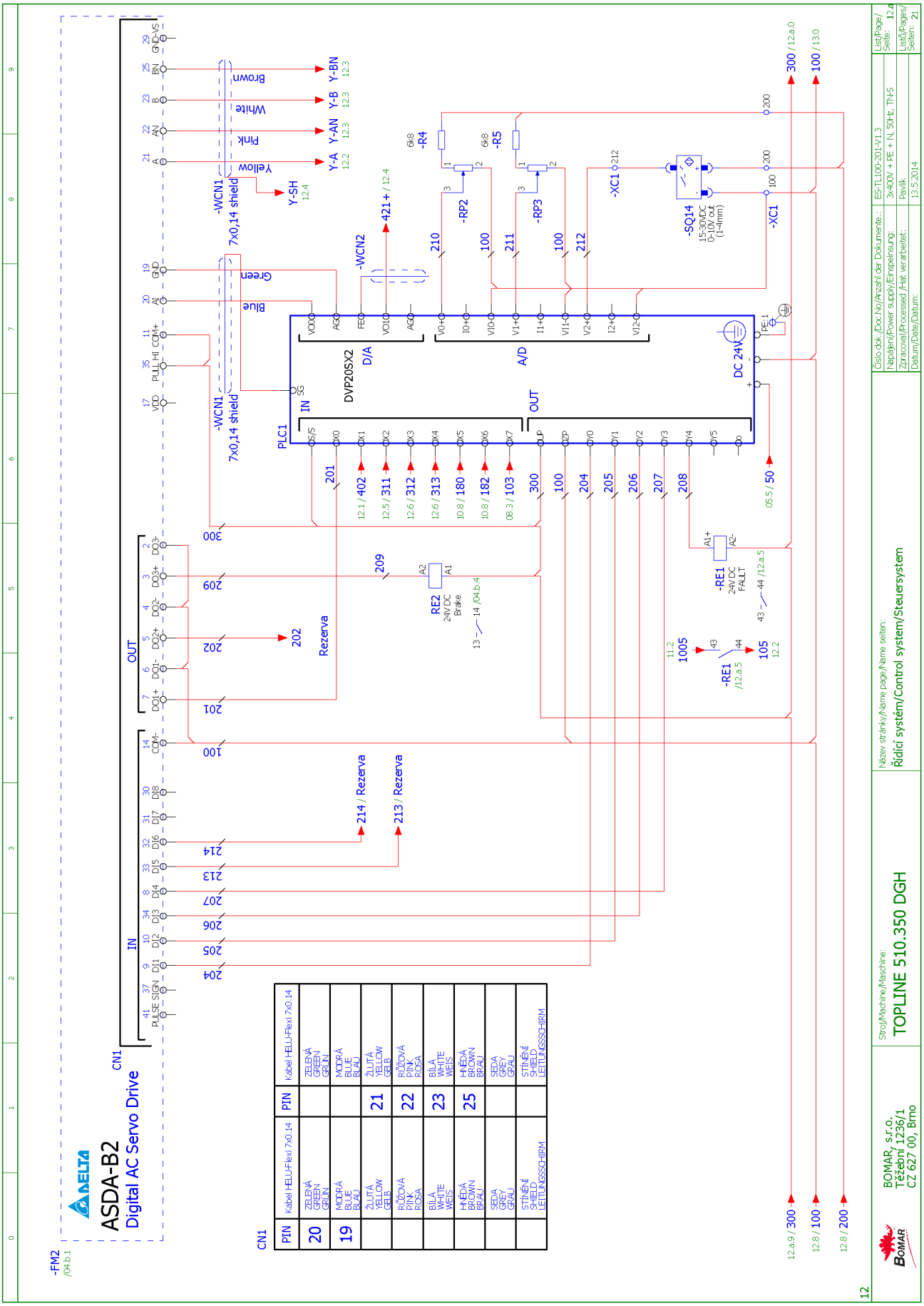




Manual version: 1.01 / March 2016
Manual rev.: 1

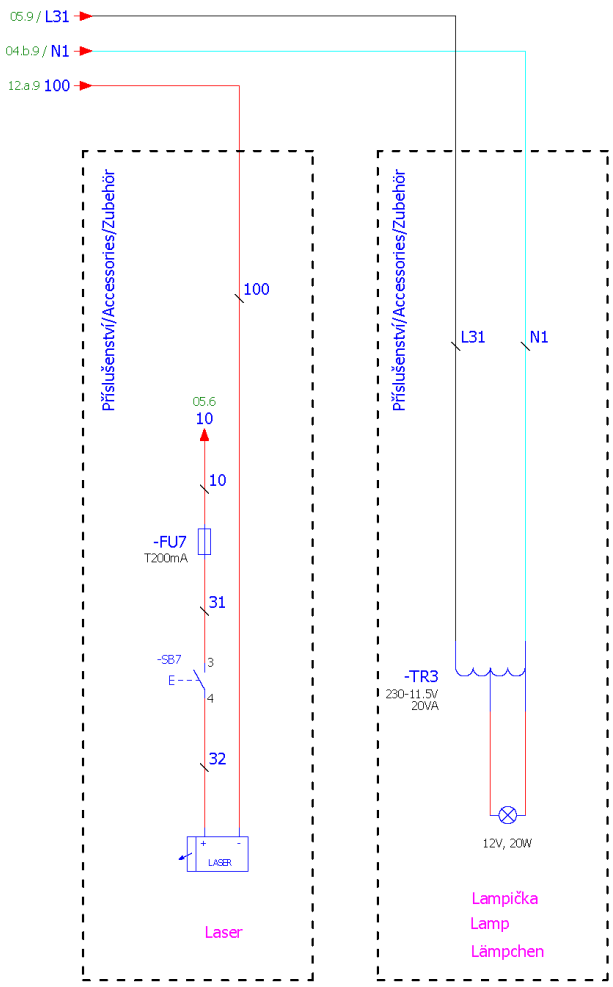


SN1

| ELGO | Linear sensor | Kabel HELU-Flexi 7x0.14 |
|---|---|---|
| + | HNĚDÁ<br>BROWN<br>BRAUN | HNĚDÁ+MODRÁ<br>BROWN+BLUE<br>BRAU+BLAU |
| - | BÍLÁ<br>WHITE<br>WEIS | SEDA<br>GREY<br>GRAU |
| A | ZELENÁ<br>GREEN<br>GRÜN | ŽLUTÁ<br>YELLOW<br>GELB |
| AN | FIALOVÁ<br>VIOLET<br>VIOLET | RŮŽOVÁ<br>PINK<br>ROSA |
| B | ŽLUTÁ<br>YELLOW<br>GELB | BÍLÁ<br>WHITE<br>WEIS |
| BN | ORANŽOVÁ<br>ORANGE<br>ORANGE | ZELENÁ<br>GREEN<br>GRÜN |
| | ČERNÁ<br>BLACK<br>SCHWARZ | STÍNĚNÍ<br>SHIELD<br>LEITUNGSSCHIRM |

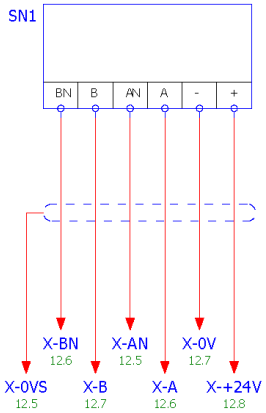


12.a

| | | | | |
|---|---|---|---|---|
| BOMAR, s.r.o.<br>Těžební 1236/1<br>CZ 627 00, Brno | Stroj/Machine/Maschine:<br>TOPLINE 510.350 DGH | Název stránky/Name page/Name seiten:<br>Příslušenství/Accessories/Zubehör | Číslo dok./Doc.No/Anzahl der Dokumente.: ES-TL100-201-V1.3<br>Napájení/Power supply/Einspeinsung: 3x400V + PE + N, 50Hz, TN-S<br>Zpracoval/Processed /Hat verarbeitet: Pavlík<br>Datum/Date/Datum: 13.5.2014 | List/Page/Seite: 13<br>List3/Pages/Seiten: 21 |

## 6.2. Hydraulické schéma / Hydraulikschema / Hydraulic diagram

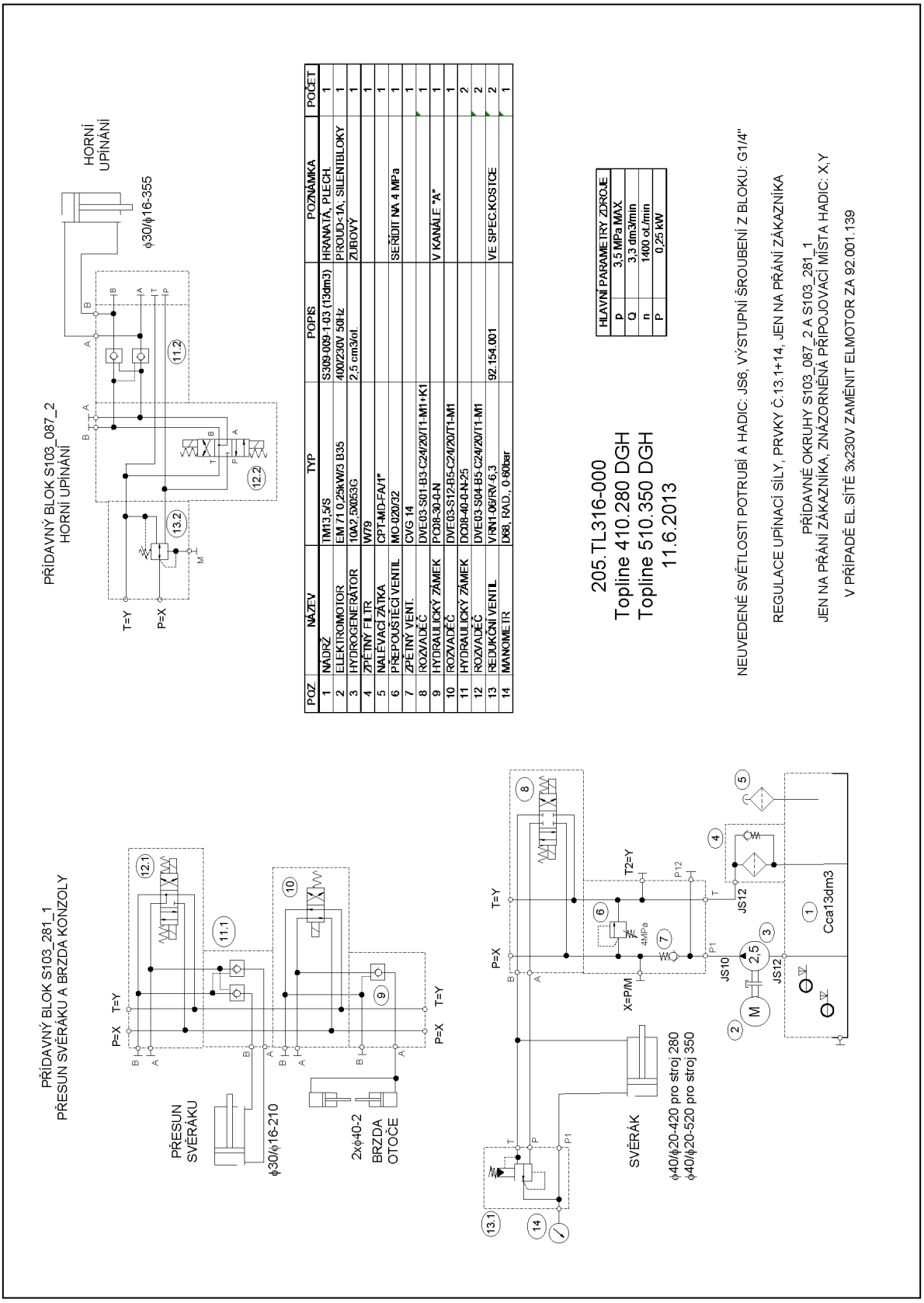


| POZ. | NÁZEV | TYP | POPIS | POZNÁMKA | POČET |
|---|---|---|---|---|---|
| 1 | NÁDRŽ | TM13,5/S | S309.009-1.03 (13dm3) | HRANATÁ, PLECH. | 1 |
| 2 | ELEKTROMOTOR | EM 71 0,25kW/3 B35 | 400/230V 50Hz | PROUD<1A, SILENTIBLOKY | 1 |
| 3 | HYDROGENERÁTOR | 10A2,5X053G | 2,5 cm3/ot | ZUBOVÝ | 1 |
| 4 | ZPĚTNÝ FILTR | W79 | | | 1 |
| 5 | NALÉVACÍ ZÁTKA | CPT-MD-FA/1" | | | 1 |
| 6 | PŘEPOUŠTĚCÍ VENTIL | MO-020/32 | | SEŘÍDIT NA 4 MPa | 1 |
| 7 | ZPĚTNÝ VENT. | CVG 14 | | | 1 |
| 8 | ROZVADĚČ | DVE03-S01-B3-C24/20/T1-M1+K1 | | | 1 |
| 9 | HYDRAULICKÝ ZÁMEK | PO08-30-0-N | | V KANÁLE "A" | 1 |
| 10 | ROZVADĚČ | DVE03-S12-B5-C24/20/T1-M1 | | | 1 |
| 11 | HYDRAULICKÝ ZÁMEK | DO08-40-0-N-25 | | | 2 |
| 12 | ROZVADĚČ | DVE03-S04-B5-C24/20/T1-M1 | | | 2 |
| 13 | REDUKČNÍ VENTIL | VRN1-06/R/ 6,3 | 92.154.001 | VE SPEC.KOSTCE | 2 |
| 14 | MANOMETR | D68, RAD., 0-60bar | | | 1 |

| HLAVNÍ PARAMETRY ZDROJE | |
|---|---|
| p | 3,5 MPa MAX |
| Q | 3,3 dm3/min |
| n | 1400 ot./min |
| P | 0,25 kW |

| Poz. | Název položky | | ks |
|---|---|---|---|
| Pos. | Bezeichnung | | Menge |
| Pos. | Item | | Pcs. |
| 1 | Nádrž / Behälter / Tank | TM13,5/S<br>S309-009-1-03 (13 dm3) | 1 |
| 2 | Elektromotor / Elektromotor / Electromotor | EM 71 0,25kW/3 B 35<br>400/230V. 50 Hz | 1 |
| 3 | Hydrogenerátor / Hydraulikgenerator / Hydrogenerator | 10A2,5X053G | 1 |
| 4 | Zpětný filtr / | W79 | 1 |
| 5 | Nalévací zátka / Stopfen / Fill stopper | CPT-MD-FA/1" | 1 |
| 6 | Přepouštěcí ventil / Bypaßventil / By pass valve | MO-020/32 | 1 |
| 7 | Zpětný ventil / | CVG 14 | 1 |
| 8 | Rozváděč / Schaltschrank / Switchboard | DVE03-S01-B3-<br>C24/20/T1-M1+K1 | 1 |
| 9 | Hydraulický zámek / Hydraulisches Schloß / Hydraulic lock | PC08-30-0-N | 1 |
| 10 | Rozváděč / Schaltschrank / Switchboard | DVE03-S12-B5-<br>C24/20/T1-M1 | 1 |
| 11 | Hydraulický zámek / Hydraulisches Schloß / Hydraulic lock | DC08-40-0-N-25 | 2 |
| 12 | Rozváděč / Schaltschrank / Switchboard | DVE03-S04-B5-<br>C24/20/T1-M1 | 2 |
| 13 | Redukční ventil / Reduktionventil / | VRN1-06/RV-6,3<br>92.154.001 | 2 |
| 14 | Manometr / Manometer / Manometer | D68, RAD., 0-60 bar | 1 |

# 7. Výkresy sestav pro objednání náhradních dílů / Zeichnungen für Bestellung der Ersatzteile / Drawing assemblies for spare parts order

- Při objednávání náhradních dílů vždy uvádějte: typ stroje (např. practix Individual 520.360 DGH) , výrobní číslo (např. 125) a rok výroby (např. 1999).

- In die Bestellung der Ersatzteile führen Sie immer an: Maschinentyp (z. B. Individual 520.360 DGH), Serien Nr. (z. B. 125) und Baujahr (z. B. 1999).

- For spare parts order, you must always to allege: type of machine (for example Individual 520.360 DGH), serial number (for example 125, see cover page) and year of construction (for example 1999).

## 7.1. TOPLINE 510.350 DGH

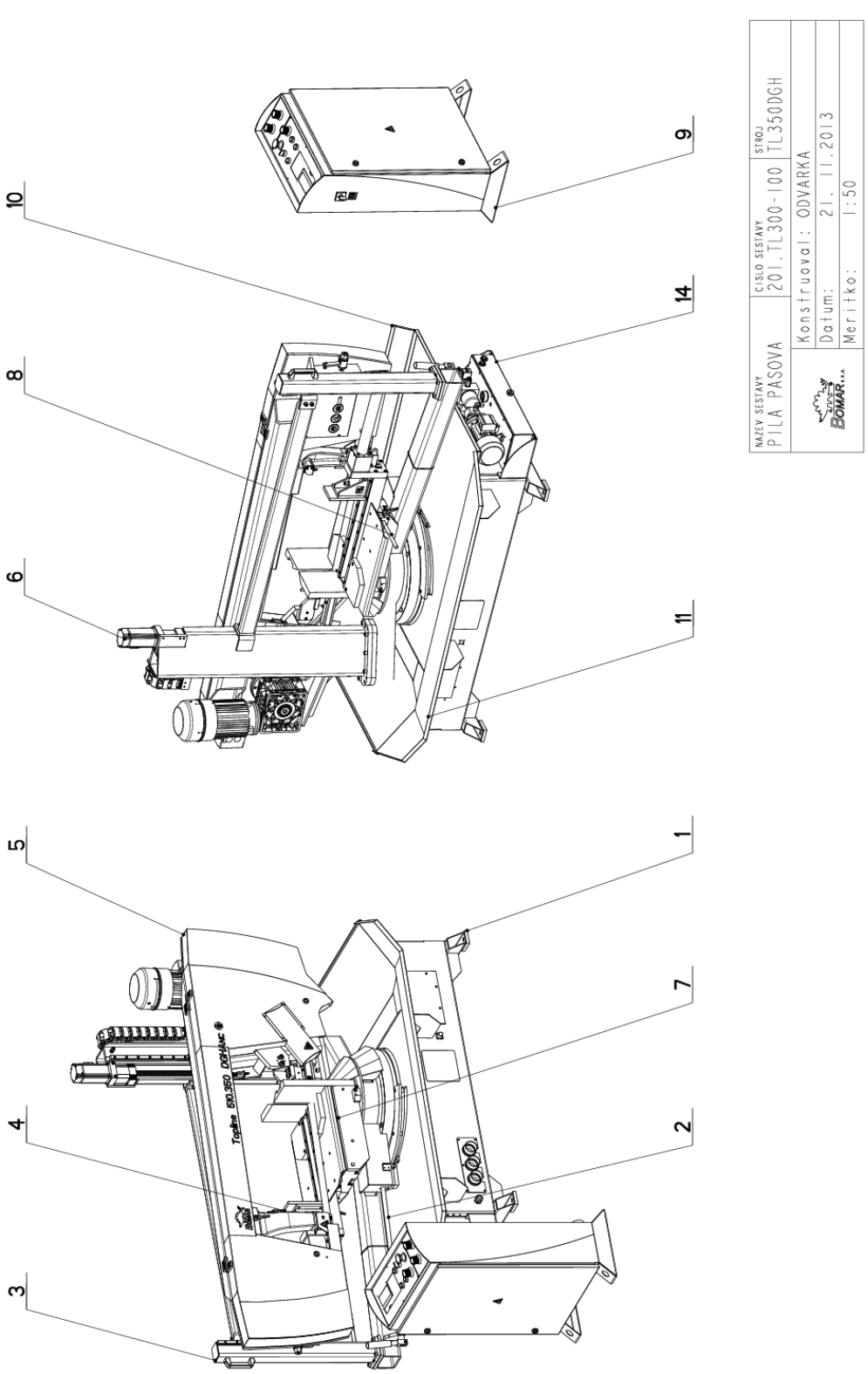

## 7.2. Kusovník / Piece list / Stückliste - TOPLINE 510.350 DGH

| Cislo Sestavy | Ver. | Nazev sestavy |
|---|---|---|
| 201.TL300-100 | 0 | PILA PASOVA/BAND SAW/BANDSAGE |

| Poz. | Objednaci cislo | Ver. | Nazev polozky | Rozmer | Ks |
|---|---|---|---|---|---|
| 1 | 201.TL301-100 | 0 | PODSTAVEC / BASE / UNTERSATZ | | 1 |
| 2 | 201.TL302-050 | 0 | BRZDA / DRIVE / ANTRIEB | | 1 |
| 3 | 201.TL302-100 | 0 | KONZOLA OTOCNA / TURNABLE CONSOL / DREHKONSOLE | | 1 |
| 4 | 201.TL303-000 | 0 | SVERAK / VICE / SCHRAUBSTOCK | SESTAVA | 1 |
| 5 | 201.TL304-000 | 0 | RAMENO / SAW ARM / SÄGERAHMEN | | 1 |
| 6 | 201.TL305-100 | 0 | POHON / CART / WAGEN | SESTAVA | 1 |
| 7 | 201.TL309-000 | 0 | PODSTAVEC SVERAKU / VICE BASE / SCHRAUBSTOCKUNTERSATZ | | 1 |
| 8 | 201.TL309-020 | 0 | BRZDA / BRAKE / BREMSE | | 1 |
| 9 | 201.TL330-000 | 0 | OVLADACI PANEL / CONTROL PANEL / BEDIENPULT | | 1 |
| 10 | 30.TL314-250 | 0 | OKAP / GUTTER CHANNEL / BLECH | | 1 |
| 11 | 30.TL314-260 | 0 | OKAP / GUTTER CHANNEL / BLECH | | 1 |
| 12 | 30.TL399-001 | 0 | STITEK / LABEL / SCHILD | P 0.5x65 | 1 |
| 13 | 31.0599-005 | 0 | SAMOLEPKA / STICKER / AUFKLEBER | | 2 |
| 14 | 92.001.085 | 0 | AGREGAT HYDRAULICKY / HYDRAULIC GENERATOR / HYDRAULIKAGGREGAT | | 1 |
| 15 | 99.900.040 | 0 | SAMOLEPKA / STICKER / AUFKLEBER | | 1 |
| 16 | 99.900.043 | 0 | SAMOLEPKA / STICKER / AUFKLEBER | | 1 |
| 17 | 99.900.045 | 0 | SAMOLEPKA / STICKER / AUFKLEBER | | 1 |
| 18 | 99.900.046 | 0 | SAMOLEPKA / STICKER / AUFKLEBER | | 1 |
| 19 | 99.900.047 | 0 | SAMOLEPKA / STICKER / AUFKLEBER | | 1 |
| 20 | 99.900.048 | 0 | SAMOLEPKA / STICKER / AUFKLEBER | | 1 |
| 21 | 99.900.049 | 0 | SAMOLEPKA / STICKER / AUFKLEBER | | 1 |
| 22 | 99.900.053 | 0 | SAMOLEPKA / STICKER / AUFKLEBER | | 1 |
| 23 | 99.901.032 | 0 | SAMOLEPKA / STICKER / AUFKLEBER | CETIFIKACNI SAMOLEPKA | 1 |
| 24 | 99.901.065 | 0 | SAMOLEPKA / STICKER / AUFKLEBER | | 1 |

Cislo Sestavy/Number of assembly/Nummer der Baugruppe; Verze (Ver.)/Version/Version; Nazev sestavy/Assembly title/Name der Baugruppe; Pozice (Poz.)/Position/Position; Objednaci cislo/Purchase order number/Bestellnummer; Nazev polozky/Volume title/Name der Position; Rozmer/Stock size/Abmessung

## 7.3. TOPLINE 510.350 DGH

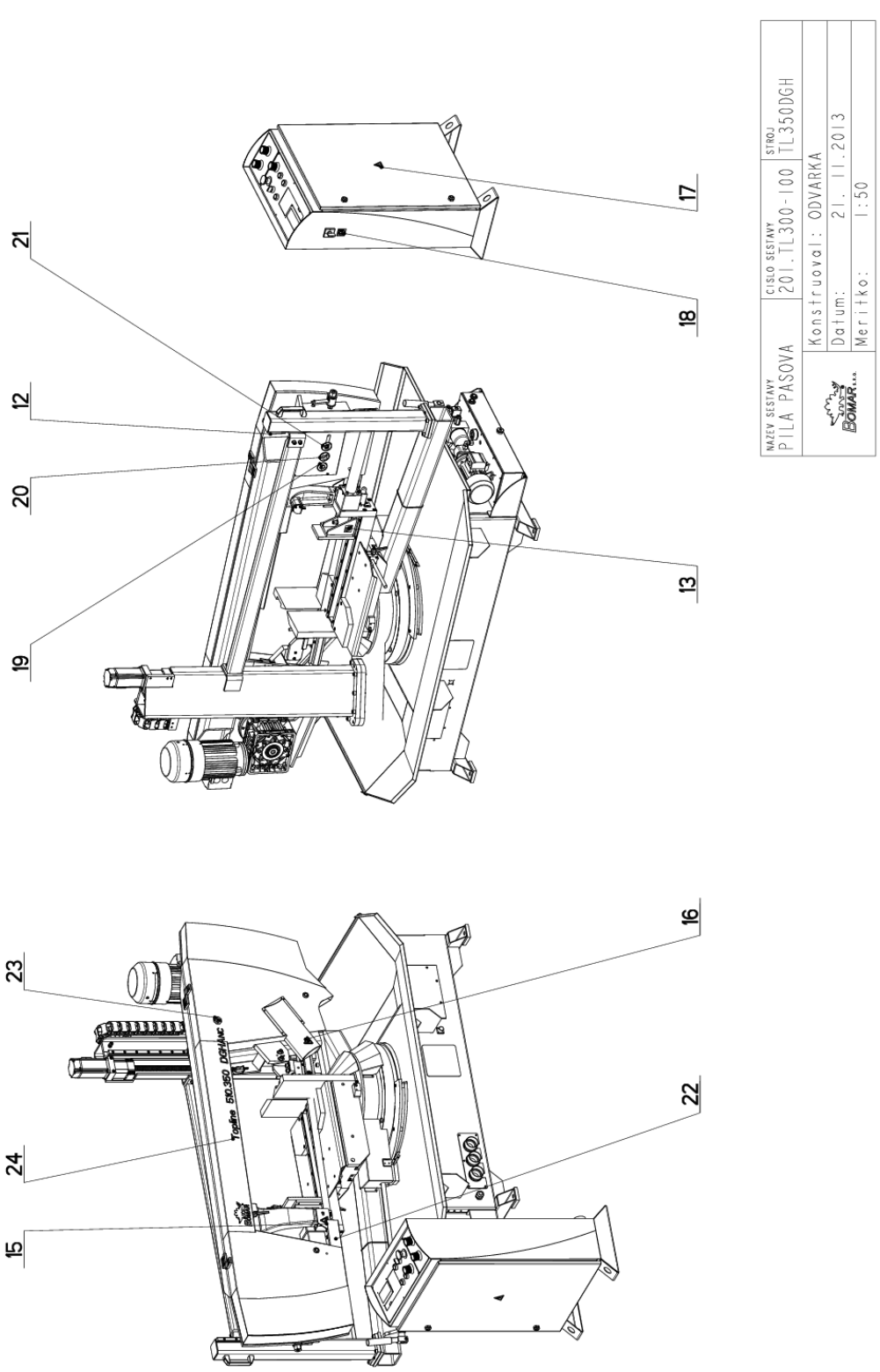

## 7.4. Kusovník / Piece list / Stückliste - TOPLINE 510.350 DGH

| Cislo Sestavy | Ver. | Nazev sestavy |
|---|---|---|
| 201.TL300-100 | 0 | PILA PASOVA/BAND SAW/BANDSAGE |

| Poz. | Objednaci cislo | Ver. | Nazev polozky | Rozmer | Ks |
|---|---|---|---|---|---|
| 1 | 201.TL301-100 | 0 | PODSTAVEC / BASE / UNTERSATZ | | 1 |
| 2 | 201.TL302-050 | 0 | BRZDA / DRIVE / ANTRIEB | | 1 |
| 3 | 201.TL302-100 | 0 | KONZOLA OTOCNA / TURNABLE CONSOL / DREHKONSOLE | | 1 |
| 4 | 201.TL303-000 | 0 | SVERAK / VICE / SCHRAUBSTOCK | SESTAVA | 1 |
| 5 | 201.TL304-000 | 0 | RAMENO / SAW ARM / SÄGERAHMEN | | 1 |
| 6 | 201.TL305-100 | 0 | POHON / CART / WAGEN | SESTAVA | 1 |
| 7 | 201.TL309-000 | 0 | PODSTAVEC SVERAKU / VICE BASE / SCHRAUBSTOCKUNTERSATZ | | 1 |
| 8 | 201.TL309-020 | 0 | BRZDA / BRAKE / BREMSE | | 1 |
| 9 | 201.TL330-000 | 0 | OVLADACI PANEL / CONTROL PANEL / BEDIENPULT | | 1 |
| 10 | 30.TL314-250 | 0 | OKAP / GUTTER CHANNEL / BLECH | | 1 |
| 11 | 30.TL314-260 | 0 | OKAP / GUTTER CHANNEL / BLECH | | 1 |
| 12 | 30.TL399-001 | 0 | STITEK / LABEL / SCHILD | P 0.5x65 | 1 |
| 13 | 31.0599-005 | 0 | SAMOLEPKA / STICKER / AUFKLEBER | | 2 |
| 14 | 92.001.085 | 0 | AGREGAT HYDRAULICKY / HYDRAULIC GENERATOR / HYDRAULIKAGGREGAT | | 1 |
| 15 | 99.900.040 | 0 | SAMOLEPKA / STICKER / AUFKLEBER | | 1 |
| 16 | 99.900.043 | 0 | SAMOLEPKA / STICKER / AUFKLEBER | | 1 |
| 17 | 99.900.045 | 0 | SAMOLEPKA / STICKER / AUFKLEBER | | 1 |
| 18 | 99.900.046 | 0 | SAMOLEPKA / STICKER / AUFKLEBER | | 1 |
| 19 | 99.900.047 | 0 | SAMOLEPKA / STICKER / AUFKLEBER | | 1 |
| 20 | 99.900.048 | 0 | SAMOLEPKA / STICKER / AUFKLEBER | | 1 |
| 21 | 99.900.049 | 0 | SAMOLEPKA / STICKER / AUFKLEBER | | 1 |
| 22 | 99.900.053 | 0 | SAMOLEPKA / STICKER / AUFKLEBER | | 1 |
| 23 | 99.901.032 | 0 | SAMOLEPKA / STICKER / AUFKLEBER | CETIFIKACNI SAMOLEPKA | 1 |
| 24 | 99.901.065 | 0 | SAMOLEPKA / STICKER / AUFKLEBER | | 1 |

Cislo Sestavy/Number of assembly/Nummer der Baugruppe; Verze (Ver.)/Version/Version; Nazev sestavy/Assembly title/Name der Baugruppe; Pozice (Poz.)/Position/Position;
Objednaci cislo/Purchase order number/Bestellnummer; Nazev polozky/Volume title/Name der Position; Rozmer/Stock size/Abmessung

## 7.5. Topline 510.350 DGH s automatickým natáčením úhlu ramene

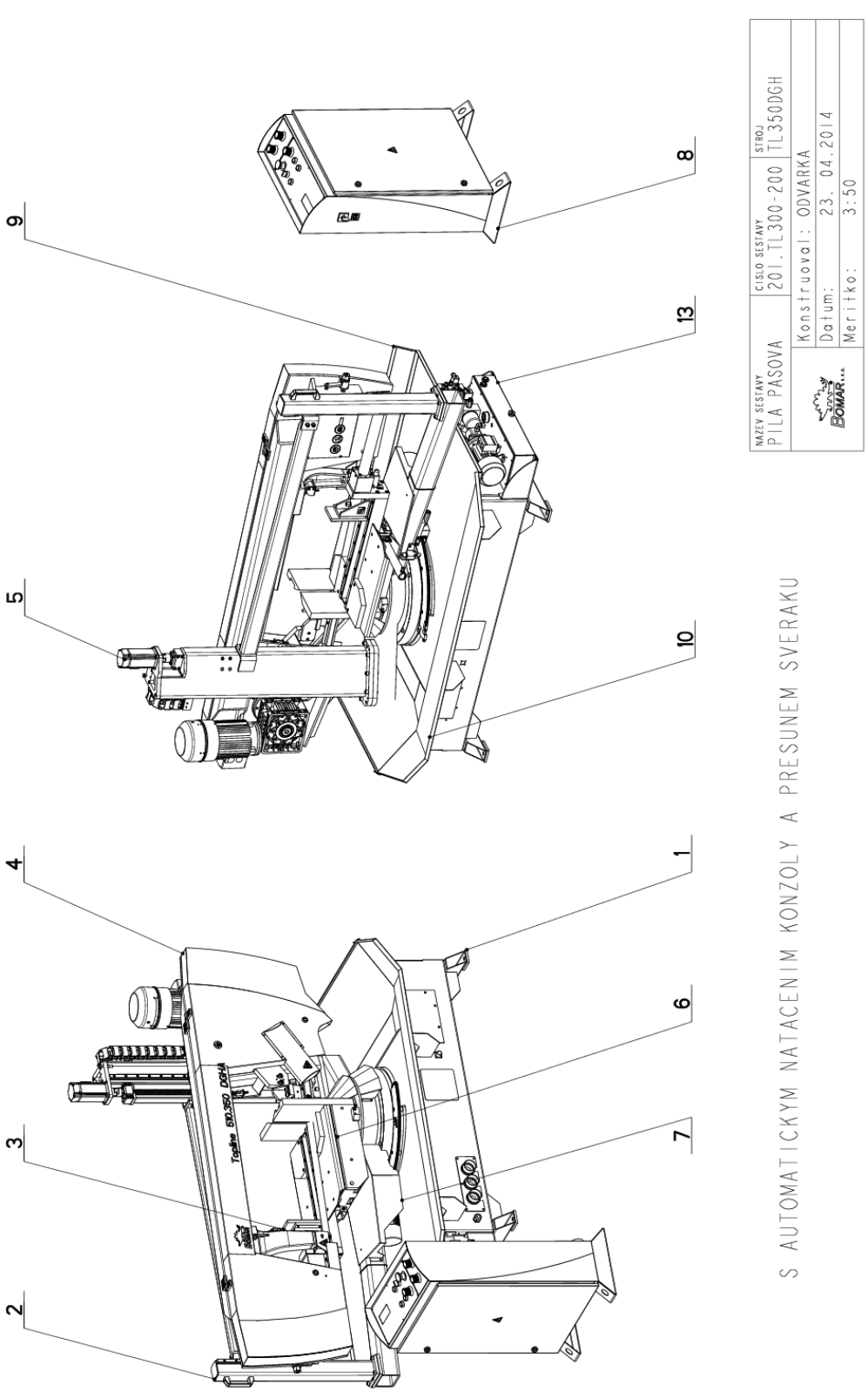

## 7.6. Kusovník / Piece list / Stückliste - Topline 510.350 DGH s automatickým natáčením úhlu ramene

| Cislo Sestavy | Ver. | Nazev sestavy |
|---|---|---|
| 201.TL300-200 | 0 | PILA PASOVA/BAND SAW/BANDSAGE |

| Poz. | Objednaci cislo | Ver. | Nazev polozky | Rozmer | Ks |
|---|---|---|---|---|---|
| 1 | 201.TL301-100 | 1 | PODSTAVEC / BASE / UNTERSATZ | | 1 |
| 2 | 201.TL302-100 | 1 | KONZOLA OTOCNA / TURNABLE CONSOL / DREHKONSOLE | | 1 |
| 3 | 201.TL303-000 | 0 | SVERAK / VICE / SCHRAUBSTOCK | SESTAVA | 1 |
| 4 | 201.TL304-000 | 0 | RAMENO / SAW ARM / SÄGERAHMEN | | 1 |
| 5 | 201.TL305-100 | 0 | POHON / CART / WAGEN | SESTAVA | 1 |
| 6 | 201.TL309-000 | 1 | PODSTAVEC SVERAKU / VICE BASE / SCHRAUBSTOCKUNTERSATZ | | 1 |
| 7 | 201.TL314-100 | 1 | POHON / DRIVE / ANTRIEB | | 1 |
| 8 | 201.TL330-000 | 1 | OVLADACI PANEL / CONTROL PANEL / BEDIENPULT | | 1 |
| 9 | 30.TL314-250 | 0 | OKAP / GUTTER CHANNEL / BLECH | | 1 |
| 10 | 30.TL314-260 | 0 | OKAP / GUTTER CHANNEL / BLECH | | 1 |
| 11 | 30.TL399-001 | 0 | STITEK / LABEL / SCHILD | P 0.5x65 | 1 |
| 12 | 31.0599-005 | 0 | SAMOLEPKA / STICKER / AUFKLEBER | | 2 |
| 13 | 92.001.085 | 0 | AGREGAT HYDRAULICKY / HYDRAULIC GENERATOR / HYDRAULIKAGGREGAT | | 1 |
| 14 | 99.900.040 | 0 | SAMOLEPKA / STICKER / AUFKLEBER | | 1 |
| 15 | 99.900.043 | 0 | SAMOLEPKA / STICKER / AUFKLEBER | | 1 |
| 16 | 99.900.045 | 0 | SAMOLEPKA / STICKER / AUFKLEBER | | 1 |
| 17 | 99.900.046 | 0 | SAMOLEPKA / STICKER / AUFKLEBER | | 1 |
| 18 | 99.900.047 | 0 | SAMOLEPKA / STICKER / AUFKLEBER | | 1 |
| 19 | 99.900.048 | 0 | SAMOLEPKA / STICKER / AUFKLEBER | | 1 |
| 20 | 99.900.049 | 0 | SAMOLEPKA / STICKER / AUFKLEBER | | 1 |
| 21 | 99.900.053 | 0 | SAMOLEPKA / STICKER / AUFKLEBER | | 1 |
| 22 | 99.901.032 | 0 | SAMOLEPKA / STICKER / AUFKLEBER | CETIFIKACNI SAMOLEPKA | 1 |
| 23 | 99.901.065 | 0 | SAMOLEPKA / STICKER / AUFKLEBER | | 1 |

Cislo Sestavy/Number of assembly/Nummer der Baugruppe; Verze (Ver.)/Version/Version; Nazev sestavy/Assembly title/Name der Baugruppe; Pozice (Poz.)/Position/Position; Objednaci cislo/Purchase order number/Bestellnummer; Nazev polozky/Volume title/Name der Position; Rozmer/Stock size/Abmessung

## 7.7. Topline 510.350 DGH s automatickým natáčením úhlu ramene

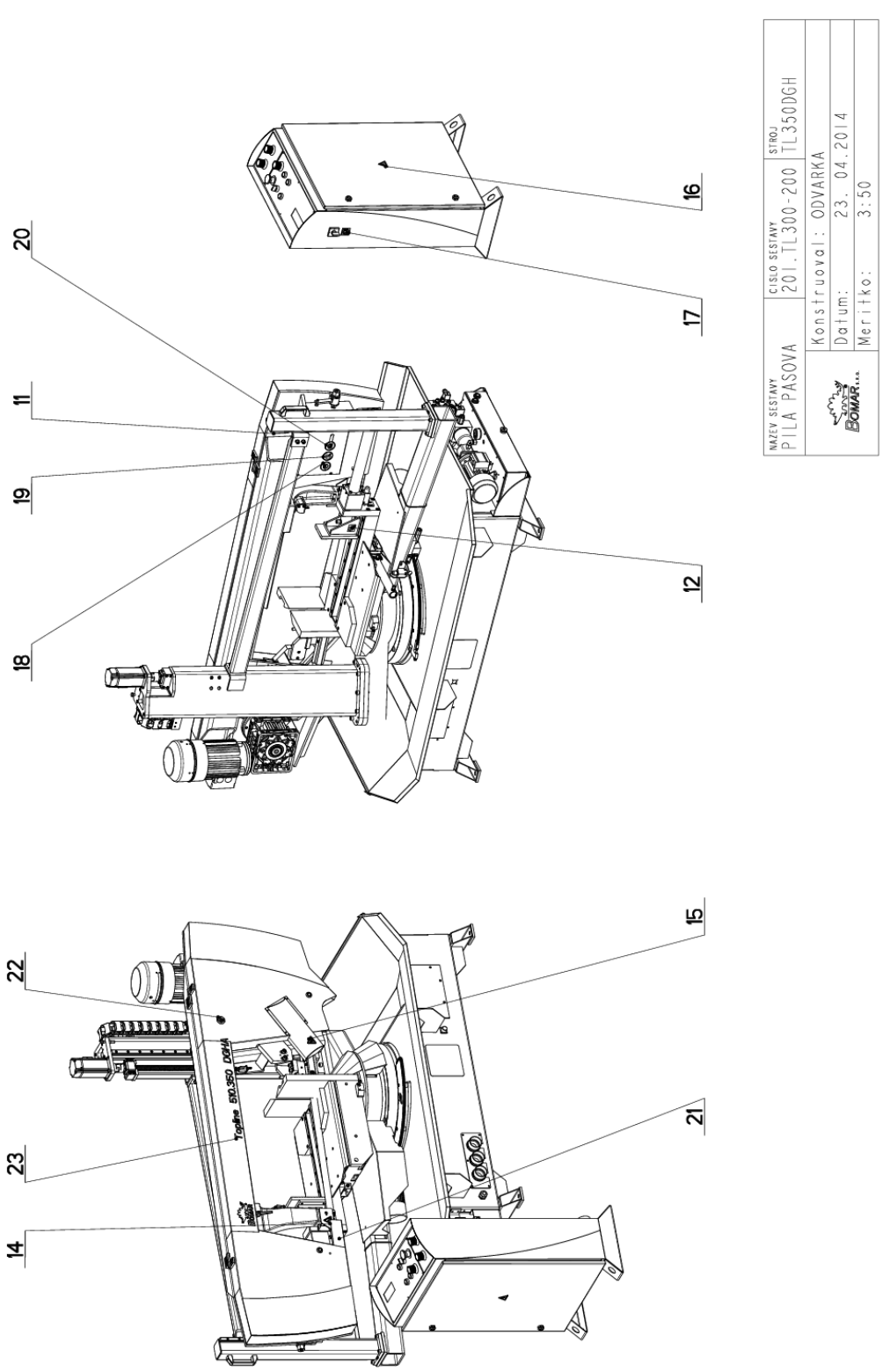

## 7.8. Kusovník / Piece list / Stückliste - Topline 510.350 DGH s automatickým natáčením úhlu ramene

| Cislo Sestavy | Ver. | Nazev sestavy |
|---|---|---|
| 201.TL300-200 | 0 | PILA PASOVA/BAND SAW/BANDSAGE |

| Poz. | Objednaci cislo | Ver. | Nazev polozky | Rozmer | Ks |
|---|---|---|---|---|---|
| 1 | 201.TL301-100 | 1 | PODSTAVEC / BASE / UNTERSATZ | | 1 |
| 2 | 201.TL302-100 | 1 | KONZOLA OTOCNA / TURNABLE CONSOL / DREHKONSOLE | | 1 |
| 3 | 201.TL303-000 | 0 | SVERAK / VICE / SCHRAUBSTOCK | SESTAVA | 1 |
| 4 | 201.TL304-000 | 0 | RAMENO / SAW ARM / SÄGERAHMEN | | 1 |
| 5 | 201.TL305-100 | 0 | POHON / CART / WAGEN | SESTAVA | 1 |
| 6 | 201.TL309-000 | 1 | PODSTAVEC SVERAKU / VICE BASE / SCHRAUBSTOCKUNTERSATZ | | 1 |
| 7 | 201.TL314-100 | 1 | POHON / DRIVE / ANTRIEB | | 1 |
| 8 | 201.TL330-000 | 1 | OVLADACI PANEL / CONTROL PANEL / BEDIENPULT | | 1 |
| 9 | 30.TL314-250 | 0 | OKAP / GUTTER CHANNEL / BLECH | | 1 |
| 10 | 30.TL314-260 | 0 | OKAP / GUTTER CHANNEL / BLECH | | 1 |
| 11 | 30.TL399-001 | 0 | STITEK / LABEL / SCHILD | P 0.5x65 | 1 |
| 12 | 31.0599-005 | 0 | SAMOLEPKA / STICKER / AUFKLEBER | | 2 |
| 13 | 92.001.085 | 0 | AGREGAT HYDRAULICKY / HYDRAULIC GENERATOR / HYDRAULIKAGGREGAT | | 1 |
| 14 | 99.900.040 | 0 | SAMOLEPKA / STICKER / AUFKLEBER | | 1 |
| 15 | 99.900.043 | 0 | SAMOLEPKA / STICKER / AUFKLEBER | | 1 |
| 16 | 99.900.045 | 0 | SAMOLEPKA / STICKER / AUFKLEBER | | 1 |
| 17 | 99.900.046 | 0 | SAMOLEPKA / STICKER / AUFKLEBER | | 1 |
| 18 | 99.900.047 | 0 | SAMOLEPKA / STICKER / AUFKLEBER | | 1 |
| 19 | 99.900.048 | 0 | SAMOLEPKA / STICKER / AUFKLEBER | | 1 |
| 20 | 99.900.049 | 0 | SAMOLEPKA / STICKER / AUFKLEBER | | 1 |
| 21 | 99.900.053 | 0 | SAMOLEPKA / STICKER / AUFKLEBER | | 1 |
| 22 | 99.901.032 | 0 | SAMOLEPKA / STICKER / AUFKLEBER | CETIFIKACNI SAMOLEPKA | 1 |
| 23 | 99.901.065 | 0 | SAMOLEPKA / STICKER / AUFKLEBER | | 1 |

Cislo Sestavy/Number of assembly/Nummer der Baugruppe; Verze (Ver.)/Version/Version; Nazev sestavy/Assembly title/Name der Baugruppe; Pozice (Poz.)/Position/Position; Objednaci cislo/Purchase order number/Bestellnummer; Nazev polozky/Volume title/Name der Position; Rozmer/Stock size/Abmessung

## 7.9. Podstavec / Base / Untersatz

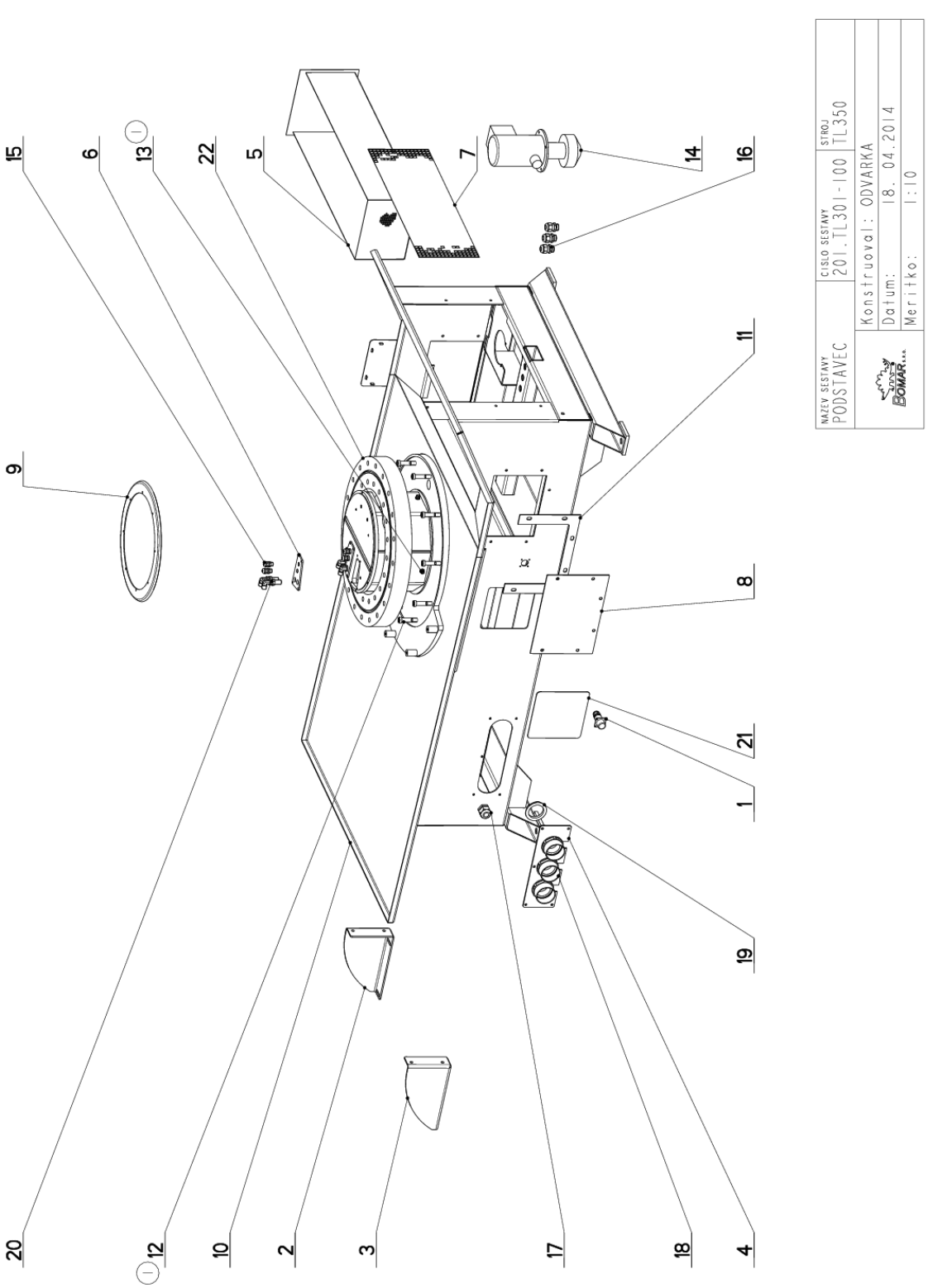

## 7.10. Kusovník / Piece list / Stückliste - Podstavec / Base / Untersatz

| Cislo Sestavy | Ver. | Nazev sestavy |
|---|---|---|
| 201.TL301-100 | 1 | PODSTAVEC/BASE/UNTERSATZ |

| Poz. | Objednaci cislo | Ver. | Nazev polozky | Rozmer | Ks |
|---|---|---|---|---|---|
| 1 | 262.007 | 0 | KONEKTOR / CONNECTOR / STECKVERBINDER | | 1 |
| 2 | 30.M201-005 | 2 | DRZAK / HOLDER / HALTER | P 4x173 | 1 |
| 3 | 30.M201-006 | 2 | DRZAK / HOLDER / HALTER | P 4x173 | 1 |
| 4 | 30.R201-056 | 1 | VIKO / COVER / DECKEL | P 4x100 | 1 |
| 5 | 30.TL301-005 | 1 | VANA / TANK / WANNE | | 1 |
| 6 | 30.TL301-008 | 0 | PLECH / PLATE / BLECH | P 4x64 | 2 |
| 7 | 30.TL301-011 | 0 | PLECH DEROVANY / PERFORATED PLATE / LOCHBLECH | P 1x194 | 1 |
| 8 | 30.TL301-014 | 0 | KRYT / COVER / ABDECKUNG | P 3x200 | 1 |
| 9 | 30.TL301-016 | 1 | KRYT / COVER / ABDECKUNG | P 2x377 | 1 |
| 10 | 30.TL301-101 | 0 | PODSTAVEC / BASE / UNTERSATZ | | 1 |
| 11 | 31.7217-132 | 0 | TESNENI / SEALING / DICHTUNG | TL4X196 | 1 |
| 12 | 90.015.25.035 (1) | 0 | SROUB IMBUS / / | M12X65 | 10 |
| 13 | 90.400.5Z.001 (1) | 0 | ZATKA / PLUG / STOPFEN | M10x1 | 4 |
| 14 | 91.020.004 | 0 | CERPADLO CHLAZENI / COOLING PUMP / KÜHLMITTELPUMPE | 230/400V | 1 |
| 15 | 91.070.010 | 0 | PRUCHODKA / LEADTHROUGH / DURCHFÜHRUNG | M12x1.5 CERNA | 4 |
| 16 | 91.070.012 | 0 | VYVODKA / BUSHING / TÜLLE | M20x1.5 | 3 |
| 17 | 91.070.013 | 0 | VYVODKA / BUSHING / TÜLLE | M25x1,5 | 1 |
| 18 | 91.071.022 | 0 | VYVODKA / BUSHING / TÜLLE | | 3 |
| 19 | 91.072.016 | 0 | MATICE / NUT / MUTTER | | 3 |
| 20 | 92.009.001 | 0 | PRUCHODKA / LEADTHROUGH / DURCHFÜHRUNG | 24146 | 4 |
| 21 | 94.101.039 | 0 | ZASLEPKA / PLUG / BLINDFLANSCH | 154x154x4 | 2 |
| 22 | 95.504.004 | 0 | LOZISKO / BEARING / LAGER | MTO 324 T ZC | 1 |

1.PRIDANA 4x ZATKA 90.400.5Z.001, ZRUS.SROUB M12x60 (90.001.25.063) A NAHR.SROUBEM M12x65 (90.015.25.035), 083/ZM099, 18.4.204, ODVARKA

Cislo Sestavy/Number of assembly/Nummer der Baugruppe; Verze (Ver.)/Version/Version; Nazev sestavy/Assembly title/Name der Baugruppe; Pozice (Poz.)/Position/Position; Objednaci cislo/Purchase order number/Bestellnummer; Nazev polozky/Volume title/Name der Position; Rozmer/Stock size/Abmessung

## 7.11. Brzda / Drive / Antrieb
## Topline 510.350 DGH

Cislo Sestavy 201.TL302-050 | Ver. 0 | Nazev sestavy BRZDA/DRIVE /ANTRIEB

| Poz. | Objednaci cislo | Ver. | Nazev polozky | Rozmer | Ks |
|---|---|---|---|---|---|
| 1 | 30.TL302-051 | 0 | SEGMENT / SEGMENT / SEGMENT | P 12x314 | 1 |
| 2 | 90.001.25.031 | 0 | SROUB IMBUS / ALLEN HEAD BOLT / IMBUSSCHRAUBE | 8x16 | 4 |
| 3 | 90.011.27.016 | 0 | ZAPUSTNY IMBUS / COUNTERSINK BOLT / SENKSCHRAUBE | SROUB M8X25 | 1 |
| 4 | 201.TL302-070 | 0 | BRZDA / BRAKE / BREMSE | | 1 |
| 5 | 201.TL302-060 | 0 | DORAZ / STOP PIECE / ANSCHLAG | | 1 |
| 6 | 30.TL302-052 | 0 | KRYT / COVER / ABDECKUNG | P 1,5x253 | 1 |
| 7 | 30.TL302-053 | 0 | STUPNICE / SCALE / SKALA | PO,5x24 | 1 |
| 8 | 30.TL302-054 | 0 | UKAZATEL / INDICATOR / ZEIGER | P 1,5x30 | 1 |

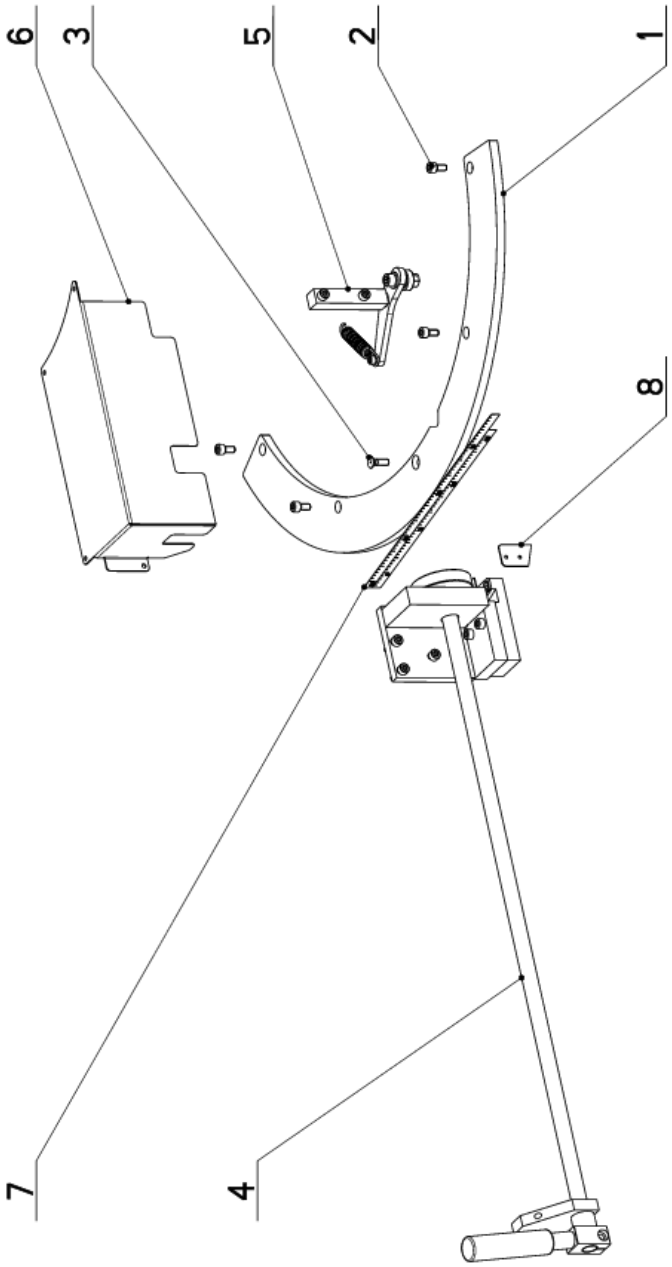


Cislo Sestavy/Number of assembly/Nummer der Baugruppe; Verze (Ver.)/Version/Version; Nazev sestavy/Assembly title/Name der Baugruppe; Pozice (Poz.)/Position/Position;
Objednaci cislo/Purchase order number/Bestellnummer; Nazev polozky/Volume title/Name der Position; Rozmer/Stock size/Abmessung

## 7.12. Brzda / Brake / Bremse
## Topline 510.350 DGH

Cislo Sestavy 201.TL302-070 | Ver. 0 | Nazev sestavy BRZDA/BRAKE/BREMSE

| Poz. | Objednaci cislo | Ver. | Nazev polozky | Rozmer | Ks |
|---|---|---|---|---|---|
| 1 | 30.8602-505 | 0 | PAKA / LEVER / HEBEL | | 1 |
| 2 | 30.TL302-071 | 0 | TELESO / BODY / KÖRPER | | 1 |
| 3 | 30.TL302-072 | 0 | EXCENTR / CAM / EXZENTER | | 1 |
| 4 | 30.TL302-073 | 0 | PLECH / PLATE / BLECH | P 1x30 | 1 |
| 5 | 30.TL302-074 | 0 | DESKA / BOARD / PLATTE | HR 75x15 | 1 |
| 6 | 30.TL302-075 | 0 | DESKA / BOARD / PLATTE | HR 50x20 | 1 |
| 7 | 30.Y302-204 | 0 | KROUZEK DISTANCNI / DISTANCE RING / DISTANZRING | TR 30x5 | 1 |
| 8 | 30.Y402-027 | 1 | KROUZEK / RING / RING | TR 25x2 | 1 |
| 9 | 30.Y402-029 | 0 | DESKA / BOARD / PLATTE | P 3-15 | 1 |
| 10 | 90.001.25.008 | 0 | SROUB IMBUS / ALLEN HEAD BOLT / IMBUSSCHRAUBE | M5X12 | 2 |
| 11 | 90.001.25.033 | 0 | SROUB IMBUS / ALLEN HEAD BOLT / IMBUSSCHRAUBE | 8x25 | 3 |
| 12 | 90.001.25.036 | 0 | SROUB IMBUS / ALLEN HEAD BOLT / IMBUSSCHRAUBE | M8X40 | 2 |
| 13 | 90.011.27.003 | 0 | SROUB ZAPUSTNY / COUNTERSINK BOLT / SENKSCHRAUBE | SROUB M5X10 | 2 |
| 14 | 94.004.502 | 0 | RUKOJET / HANDLE / GRIFF | D22 | 1 |
| 15 | 95.700.003 | 0 | POUZDRO / SLEEVE / BÜCHSE | 20X15 | 1 |
| 16 | 95.700.004 | 0 | POUZDRO / SLEEVE / BÜCHSE | 20X20 | 1 |

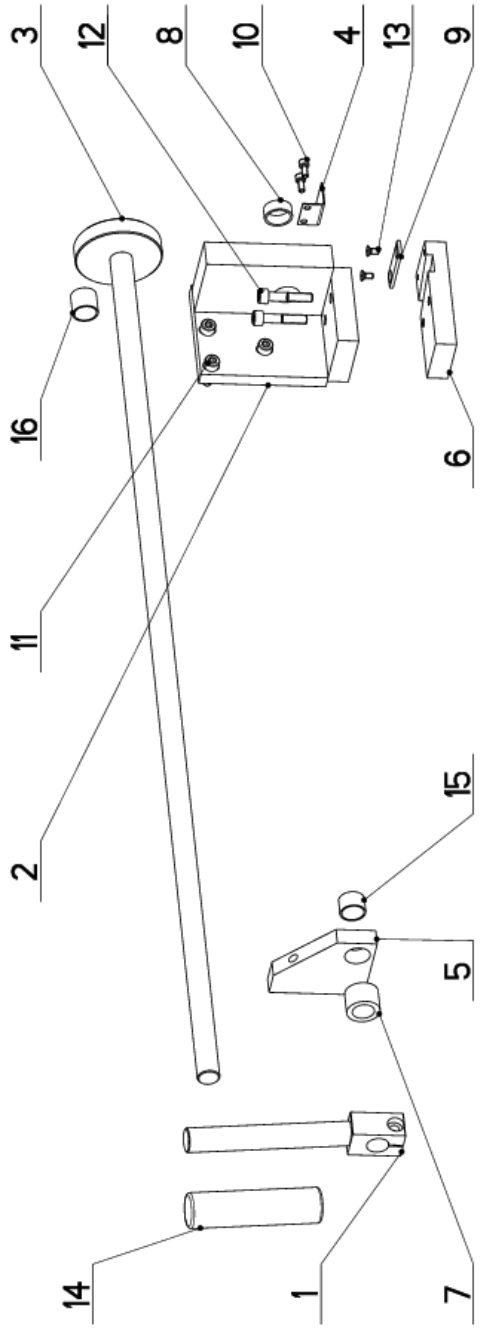


Cislo Sestavy/Number of assembly/Nummer der Baugruppe; Verze (Ver.)/Version/Version; Nazev sestavy/Assembly title/Name der Baugruppe; Pozice (Poz.)/Position/Position; Objednaci cislo/Purchase order number/Bestellnummer; Nazev polozky/Volume title/Name der Position; Rozmer/Stock size/Abmessung

## 7.13. Doraz / Stop piece / Anschlag
## Topline 510.350 DGH

Cislo Sestavy
201.TL302-060

Ver.
0

Nazev sestavy
DORAZ/STOP PIECE/ANSCHLAG

| Poz. | Objednaci cislo | Ver. | Nazev polozky | Rozmer | Ks |
|---|---|---|---|---|---|
| 1 | 30.TL302-061 | 0 | CEP / LUG / BOLZEN | HR 20x20 | 1 |
| 2 | 30.TL302-062 | 0 | PAKA / LEVER / HEBEL | P 8x45 | 1 |
| 3 | 31.0206-005 | 0 | PRUZINA / SPRING / FEDER | 2.50x16x90x27 | 1 |
| 4 | 90.001.25.016 | 0 | SROUB IMBUS / ALLEN HEAD BOLT / IMBUSSCHRAUBE | M6X12 | 1 |
| 5 | 90.001.25.049 | 0 | SROUB IMBUS / ALLEN HEAD BOLT / IMBUSSCHRAUBE | M10X35 | 1 |
| 6 | 90.001.55.083 | 0 | SROUB IMBUS / ALLEN HEAD BOLT / IMBUSSCHRAUBE | M8X30 | 2 |
| 7 | 90.100.55.006 | 0 | MATICE / NUT / MUTTER | MATICE - M10 | 1 |
| 8 | 90.163.00.004 | 0 | PODLOZKA / WASHER / UNTERLEGSCHEIBE | NORD-LOCK | 3 |
| 9 | 90.163.00.011 | 0 | PODLOZKA / WASHER / UNTERLEGSCHEIBE | NORD-LOCK | 1 |
| 10 | 95.001.004 | 0 | LOZISKO / BEARING / LAGER | 6000 2RS | 1 |
| 11 | 95.800.006 | 0 | SEGR HRIDEL. / OUTSIDE SAFETY RING / SICHERUNGSRING AUSSEN | POJISTNY KROUZEK 15 | 1 |

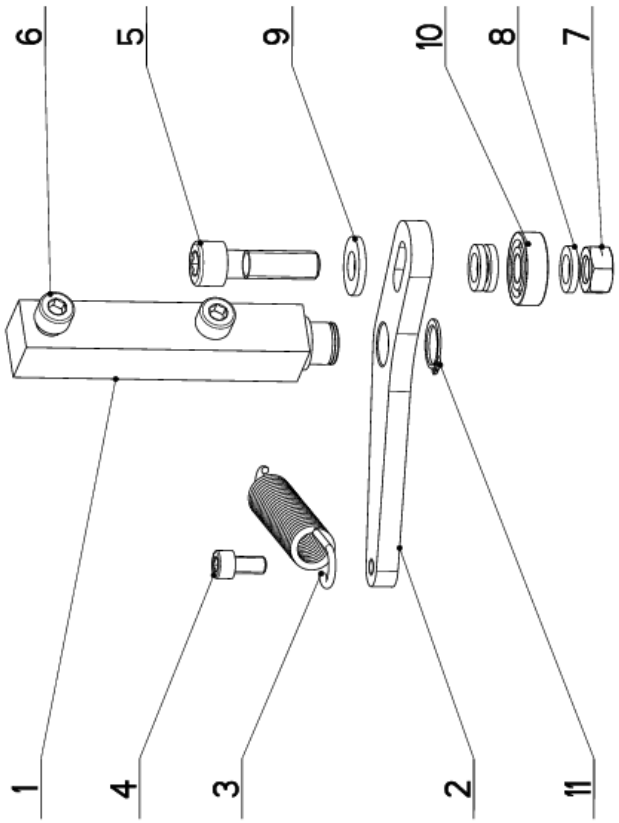


Cislo Sestavy/Number of assembly/Nummer der Baugruppe; Verze (Ver.)/Version/Version; Nazev sestavy/Assembly title/Name der Baugruppe; Pozice (Poz.)/Position/Position;
Objednaci cislo/Purchase order number/Bestellnummer; Nazev polozky/Volume title/Name der Position; Rozmer/Stock size/Abmessung

## 7.14. Konzola otočná / Turnable consol / Drehkonsole

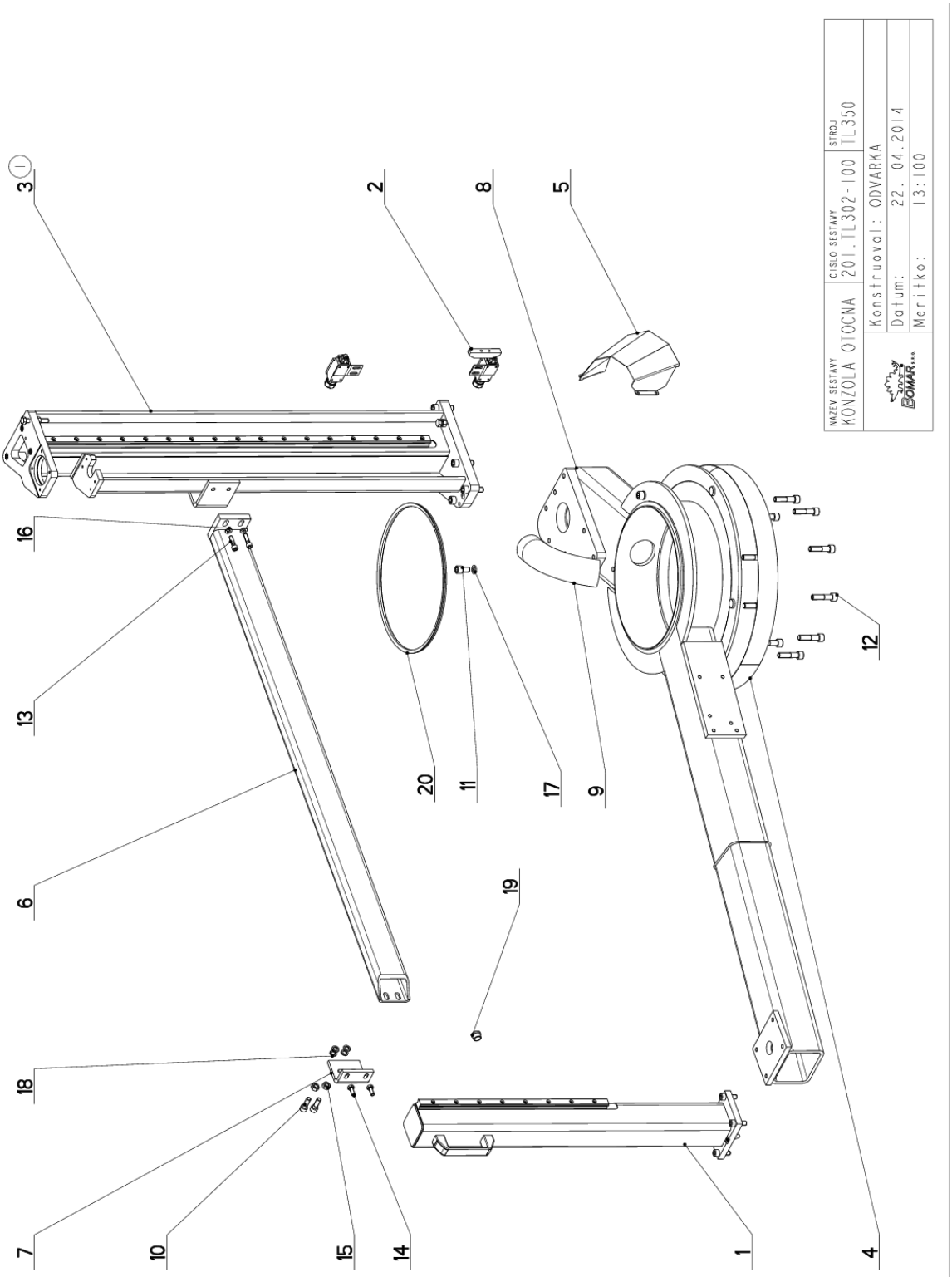

## 7.15. Kusovník / Piece list / Stückliste - Konzola otočná / Turnable consol / Drehkonsole

| Cislo Sestavy | Ver. | Nazev sestavy |
|---|---|---|
| 201.TL302-100 | 1 | KONZOLA OTOCNA/TURNABLE CONSOL/DREHKONSOLE |

| Poz. | Objednaci cislo | Ver. | Nazev polozky | Rozmer | Ks |
|---|---|---|---|---|---|
| 1 | 201.TL302-020 | 0 | SLOUP / POLE / SÄULE | | 1 |
| 2 | 201.TL302-040 | 0 | ODMEROVANI / MEASURING / GEHRUNGSMESSUNG | | 1 |
| 3 | 201.TL302-110 (1) | 0 | SLOUP / POLE / SÄULE | | 1 |
| 4 | 30.TL302-002 | 0 | KRYT / COVER / ABDECKUNG | P 0,8x50 | 1 |
| 5 | 30.TL302-004 | 0 | KRYT / COVER / ABDECKUNG | P 1x320 | 1 |
| 6 | 30.TL302-031 | 0 | LISTA VODICI / LEAD TRIM / FÜHRUNGSLEISTE | | 1 |
| 7 | 30.TL302-032 | 0 | KONZOLA / CONSOLE / KONSOLE | P 8x80 | 1 |
| 8 | 30.TL302-101 | 1 | KONZOLA OTOCNA / TURNABLE CONSOL / DREHKONSOLE | | 1 |
| 9 | 41.001.006 | 0 | TRUBKA / TUBE / ROHR | PG48 | 1 |
| 10 | 90.001.25.048 | 0 | SROUB IMBUS / ALLEN HEAD BOLT / IMBUSSCHRAUBE | M10X30 | 2 |
| 11 | 90.001.25.056 | 0 | SROUB IMBUS / ALLEN HEAD BOLT / IMBUSSCHRAUBE | M12x20 | 2 |
| 12 | 90.001.25.062 | 0 | SROUB IMBUS / ALLEN HEAD BOLT / IMBUSSCHRAUBE | M12X50 | 10 |
| 13 | 90.001.25.083 | 0 | SROUB IMBUS / ALLEN HEAD BOLT / IMBUSSCHRAUBE | M8X30 | 2 |
| 14 | 90.005.55.015 | 0 | SROUB 6HRANNY / 6 SIDED BOLT / SECHSKANTSCHRAUBE | SROUB M8X20 | 2 |
| 15 | 90.100.55.006 | 0 | MATICE / NUT / MUTTER | MATICE _ M10 | 2 |
| 16 | 90.163.00.001 | | PODLOZKA / WASHER / UNTERLEGSCHEIBE | M8 | 2 |
| 17 | 90.163.00.003 | 0 | PODLOZKA / WASHER / UNTERLEGSCHEIBE | NORD-LOCK | 2 |
| 18 | 90.163.00.004 | 0 | PODLOZKA / WASHER / UNTERLEGSCHEIBE | NORD-LOCK | 4 |
| 19 | 94.100.008 | | ZATKA / / | 22x1-2,5 | 6 |
| 20 | 96.003.001 | 0 | TESNENI / SEALING / DICHTUNG | VL NBR-350 | 1 |

1.ZMENA SLOUPU 201.TL302-010 ZA 201.TL302-110, 083/ZM099, 22.4.2014, ODVARKA

Cislo Sestavy/Number of assembly/Nummer der Baugruppe; Verze (Ver.)/Version/Version; Nazev sestavy/Assembly title/Name der Baugruppe; Pozice (Poz.)/Position/Position; Objednaci cislo/Purchase order number/Bestellnummer; Nazev polozky/Volume title/Name der Position; Rozmer/Stock size/Abmessung

## 7.16. Sloup / Pole / Säule

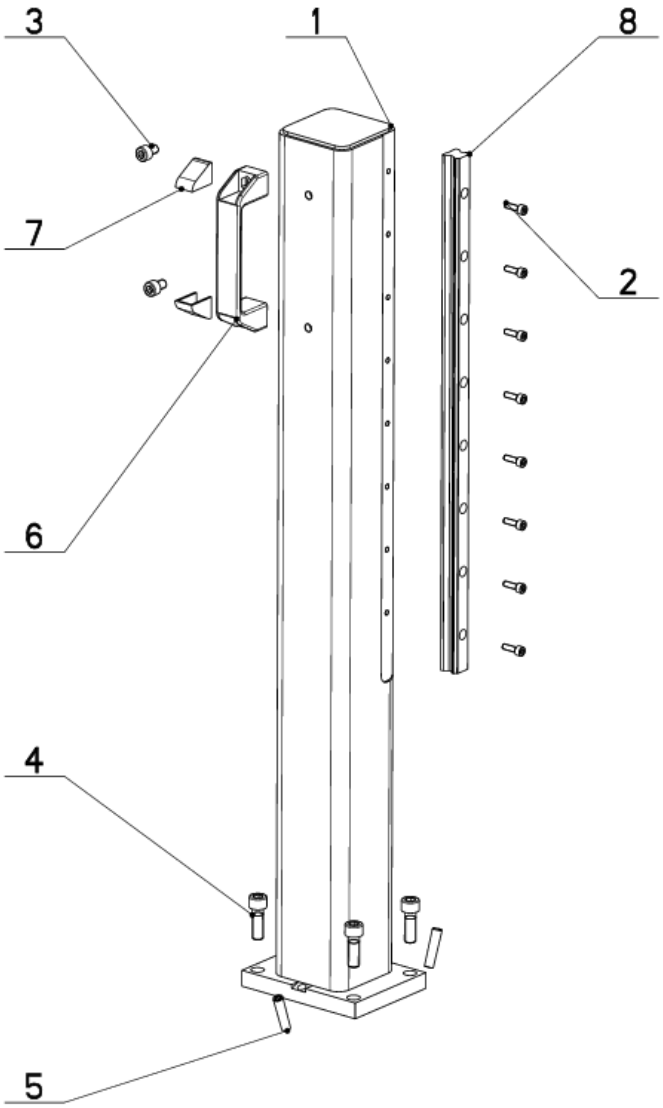


| NAZEV SESTAVY | CISLO SESTAVY | STROJ |
|---|---|---|
| SLOUP | 201.TL302-020 | TL350 |

| | |
|---|---|
| BOMAR | Konstruoval: ODVARKA |
| | Datum: 20. 11.2013 |
| | Meritko: 1:5 |

## 7.17. Kusovník / Piece list / Stückliste - Sloup / Pole / Säule

| Cislo Sestavy | Ver. | Nazev sestavy |
|---|---|---|
| 201.TL302-020 | 0 | SLOUP/POLE/SÄULE |

| Poz. | Objednaci cislo | Ver. | Nazev polozky | Rozmer | Ks |
|---|---|---|---|---|---|
| 1 | 30.TL302-021 | 0 | SLOUP / POLE / SÄULE | SVARENO | 1 |
| 2 | 90.001.25.009 | 0 | SROUB IMBUS / ALLEN HEAD BOLT / IMBUSSCHRAUBE | M5X16 | 8 |
| 3 | 90.001.25.029 | 0 | SROUB IMBUS / ALLEN HEAD BOLT / IMBUSSCHRAUBE | M8X12 | 2 |
| 4 | 90.001.25.048 | 0 | SROUB IMBUS / ALLEN HEAD BOLT / IMBUSSCHRAUBE | M10X30 | 4 |
| 5 | 90.302.02.003 | 0 | KUZEL. KOLIK S ZAV. / TAPER PIN + THREAD / KEGELBOLZEN + GEWINDE | KOLIK 8X36 | 2 |
| 6 | 94.012.001 | 0 | RUKOJET / HANDLE / GRIFF | | 1 |
| 7 | 94.012.002 | 0 | ZATKA / PLUG / STOPFEN | | 2 |
| 8 | 99.200.286 | 0 | VEDENI LINEARNI / LINEAR GUIDE / LINEARE FUHRUNG | MSA 20R 490 35/35N | 1 |

Cislo Sestavy/Number of assembly/Nummer der Baugruppe; Verze (Ver.)/Version/Version; Nazev sestavy/Assembly title/Name der Baugruppe; Pozice (Poz.)/Position/Position; Objednaci cislo/Purchase order number/Bestellnummer; Nazev polozky/Volume title/Name der Position; Rozmer/Stock size/Abmessung

## 7.18. Odměřování / Measuring / Gehrungsmessung

Cislo Sestavy
201.TL302-040

Ver.
0

Nazev sestavy
ODMEROVANI/MEASURING/GEHRUNGSMESSUNG

| Poz. | Objednaci cislo | Ver. | Nazev polozky | Rozmer | Ks |
|---|---|---|---|---|---|
| 1 | 30.6114-143 | 1 | DRZAK / HOLDER / HALTER | P 3x35 | 2 |
| 2 | 30.TL302-041 | 0 | DORAZ / STOP PIECE / ANSCHLAG | HR 20x12 | 1 |
| 3 | 91.070.012 | 0 | VYVODKA / BUSHING / TULLE | | 2 |
| 4 | 91.173.010 | 0 | SPINAC KONC.S KLADK. / END SWITCH WITH PULLEY / ENDSCHALTER MIT ROLLE | D4N-4A32 | 2 |

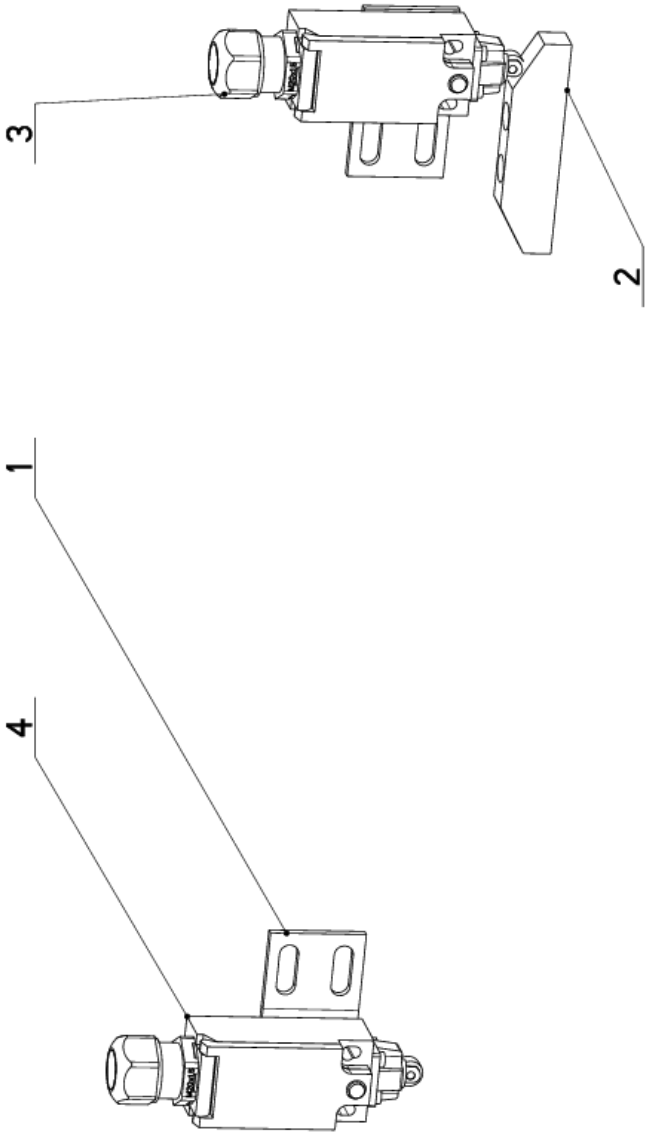


Cislo Sestavy/Number of assembly/Nummer der Baugruppe; Verze (Ver.)/Version/Version; Nazev sestavy/Assembly title/Name der Baugruppe; Pozice (Poz.)/Position/Position;
Objednaci cislo/Purchase order number/Bestellnummer; Nazev polozky/Volume title/Name der Position; Rozmer/Stock size/Abmessung

## 7.19. Sloup / Pole / Säule

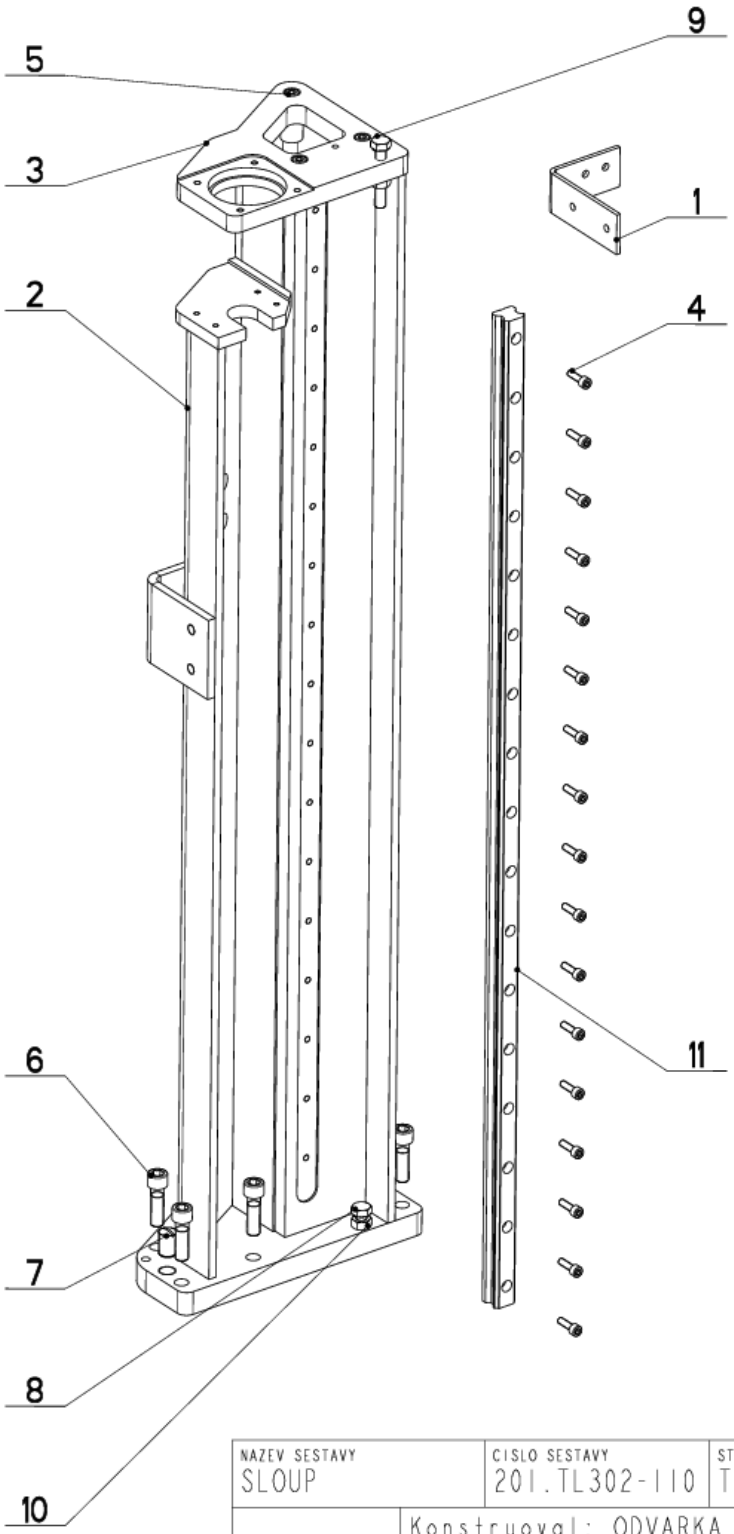


| NAZEV SESTAVY | CISLO SESTAVY | STROJ |
|---|---|---|
| SLOUP | 201.TL302-110 | TL350 |

| | |
|---|---|
| Konstruoval: | ODVARKA |
| Datum: | 22. 04.2014 |
| Meritko: | 1:5 |

## 7.20. Kusovník / Piece list / Stückliste - Sloup / Pole / Säule

| Cislo Sestavy | Ver. | Nazev sestavy |
|---|---|---|
| 201.TL302-110 | 0 | SLOUP/POLE/SÄULE |

| Poz. | Objednaci cislo | Ver. | Nazev polozky | Rozmer | Ks |
|---|---|---|---|---|---|
| 1 | 30.TL302-013 | 0 | DRZAK / HOLDER / HALTER | P 4x40 | 1 |
| 2 | 30.TL302-111 | 0 | SLOUP / POLE / SÄULE | SVARENO | 1 |
| 3 | 30.TL302-112 | 0 | DESKA / BOARD / PLATTE | P 20x174 | 1 |
| 4 | 90.001.25.018 | 0 | SROUB IMBUS / ALLEN HEAD BOLT / IMBUSSCHRAUBE | M6X20 | 17 |
| 5 | 90.001.25.033 | 0 | SROUB IMBUS / ALLEN HEAD BOLT / IMBUSSCHRAUBE | 8x25 | 3 |
| 6 | 90.001.25.060 | 0 | SROUB IMBUS / ALLEN HEAD BOLT / IMBUSSCHRAUBE | M12X40 | 8 |
| 7 | 90.002.20.028 | | SROUB STAVECI / ADJUSTMENT BOLT / STELLSCHRAUBE | SROUB M16x1,5x25 | 3 |
| 8 | 90.005.55.024 | 0 | SROUB 6HRANNY / 6 SIDED BOLT / SECHSKANTSCHRAUBE | SROUB M10X25 | 1 |
| 9 | 90.005.55.029 | 0 | SROUB 6HRANNY / 6 SIDED BOLT / SECHSKANTSCHRAUBE | SROUB M10X60 | 1 |
| 10 | 90.100.55.006 | 0 | MATICE / NUT / MUTTER | MATICE _ M10 | 2 |
| 11 | 99.200.296 | 0 | VEDENI LINEARNI / LINEAR GUIDE / LINEARE FUHRUNG | MSA 25R 1000 20/20N | 1 |

Cislo Sestavy/Number of assembly/Nummer der Baugruppe; Verze (Ver.)/Version/Version; Nazev sestavy/Assembly title/Name der Baugruppe; Pozice (Poz.)/Position/Position; Objednaci cislo/Purchase order number/Bestellnummer; Nazev polozky/Volume title/Name der Position; Rozmer/Stock size/Abmessung

## 7.21. Svěrák / Vice / Schraubstock

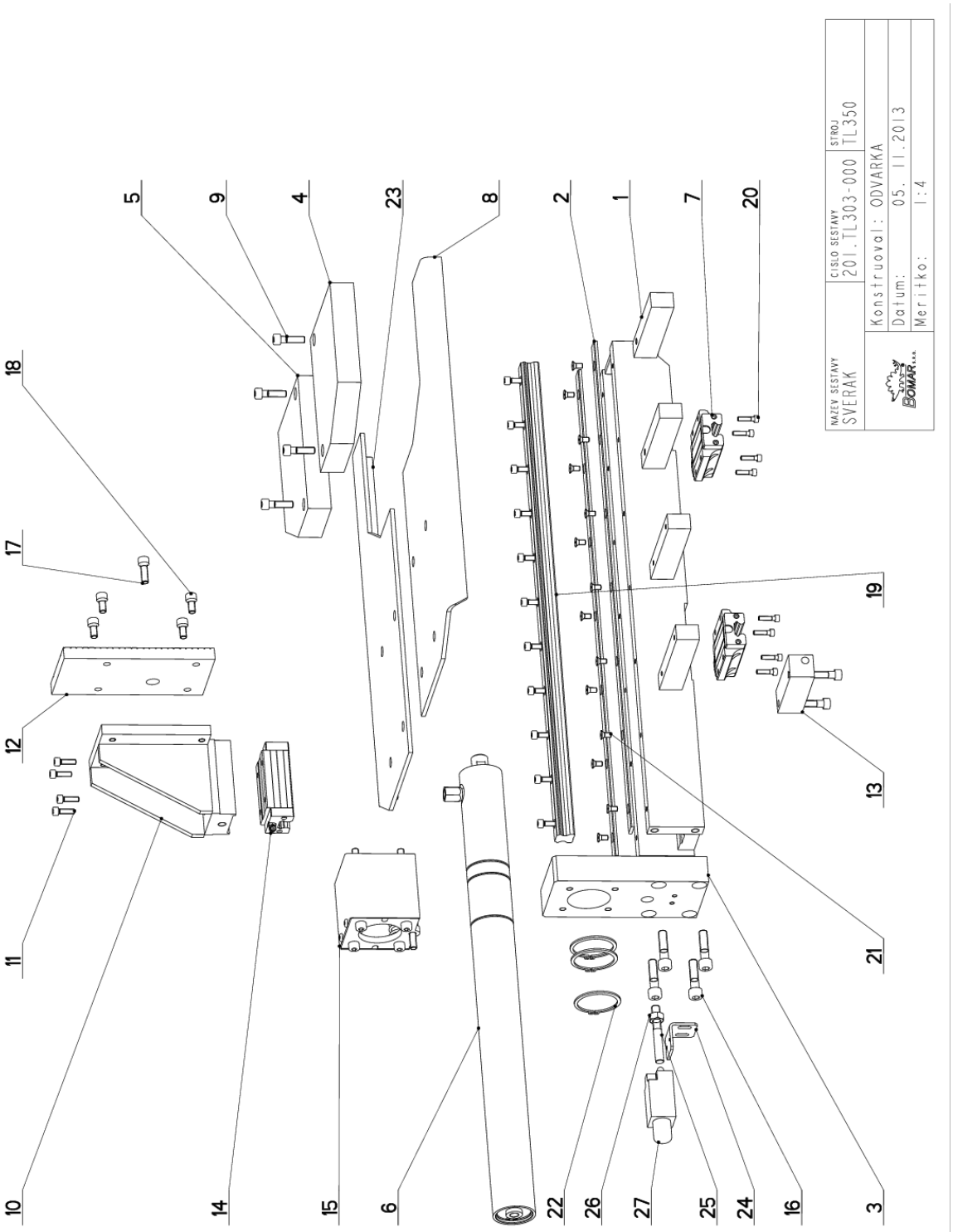

## 7.22. Kusovník / Piece list / Stückliste - Svěrák / Vice / Schraubstock

| Cislo Sestavy | Ver. | Nazev sestavy |
|---|---|---|
| 201.TL303-000 | 0 | SVERAK/VICE/SCHRAUBSTOCK |

| Poz. | Objednaci cislo | Ver. | Nazev polozky | Rozmer | Ks |
|---|---|---|---|---|---|
| 1 | 30.TL303-001 | 0 | TELESO SVERAKU / VICE BODY / SCHRAUBSTOCKKÒRPER | | 1 |
| 2 | 30.TL303-002 | 0 | LISTA TRECI / LEAD TRIM / FÜHRUNGSLEISTE | P 4x20 | 2 |
| 3 | 30.TL303-003 | 0 | DESKA / BOARD / PLATTE | P 35x100 | 1 |
| 4 | 30.TL303-004 | 0 | DESKA / BOARD / PLATTE | HR 160x30 | 1 |
| 5 | 30.TL303-005 | 0 | DESKA / BOARD / PLATTE | HR 160x30 | 1 |
| 6 | 201.TL307-000 | 0 | VALEC UPINACI / FIXING CYLINDER / SPANNZYLINDER | | 1 |
| 7 | 99.201.062 | 0 | VOZIK LINEARNIHO VEDENI / LINEAR GUIDE CART / LINEARFUHRUNGSWAGEN | MSA20LE | 2 |
| 8 | 30.TL303-006 | 0 | STUL / TABLE / TISCH | P 5x245 | 1 |
| 9 | 90.001.55.083 | 0 | SROUB IMBUS / ALLEN HEAD BOLT / IMBUSSCHRAUBE | M8X30 | 6 |
| 10 | 30.TL303-008 | 0 | CELIST / JAW / BACKE | | 1 |
| 11 | 90.001.25.018 | 0 | SROUB IMBUS / ALLEN HEAD BOLT / IMBUSSCHRAUBE | M6X20 | 15 |
| 12 | 30.TL303-009 | 0 | DESKA / BOARD / PLATTE | HR 100x15 | 1 |
| 13 | 30.TL303-010 | 0 | KOSTKA / CUBE / WURFEL | HR 30x30 | 1 |
| 14 | 99.201.074 | 0 | VOZIK LINEARNIHO VEDENI / LINEAR GUIDE CART / LINEARFUHRUNGSWAGEN | MSA25LS | 1 |
| 15 | 201.DU40-000 | 0 | SPINAC TLAKOVY / PRESSURE SWITCH / DRUCKSCHALTER | | 1 |
| 16 | 90.001.25.050 | 0 | SROUB IMBUS / ALLEN HEAD BOLT / IMBUSSCHRAUBE | M10X40 | 4 |
| 17 | 90.001.25.033 | 0 | SROUB IMBUS / ALLEN HEAD BOLT / IMBUSSCHRAUBE | 8x25 | 1 |
| 18 | 90.001.25.031 | 0 | SROUB IMBUS / ALLEN HEAD BOLT / IMBUSSCHRAUBE | 8x16 | 4 |
| 19 | 99.200.206 | 0 | VEDENI LINEARNI / LINEAR GUIDE / LINEARE FÜHRUNG | MSA25R 640-20/20 N | 1 |
| 20 | 90.001.25.010 | 0 | SROUB IMBUS / ALLEN HEAD BOLT / IMBUSSCHRAUBE | M5X20 | 8 |
| 21 | 90.011.27.005 | 0 | ZAPUSTNY IMBUS / COUNTERSINK BOLT / SENKSCHRAUBE | SROUB M6X12 | 14 |
| 22 | 95.800.019 | 0 | SEGR HRIDEL. / OUTSIDE SAFETY RING / SICHERUNGSRING AUSSEN | POJISTNY KROUZEK 52 | 3 |
| 23 | 30.TL303-016 | 0 | STUL / TABLE / TISCH | P 5x245 | 1 |
| 24 | 30.TL303-011 | 0 | DRZAK / HOLDER / HALTER | P 3x34 | 1 |
| 25 | 30.TL303-012 | 0 | TYC / POLE / STANGE | SROUB M10 | 1 |
| 26 | 90.100.55.006 | 0 | MATICE / NUT / MUTTER | MATICE _ M10 | 1 |
| 27 | 91.173.007 | 0 | SPINAC KONCOVY / END SWITCH / ENDSCHALTER | -RIWK | 1 |

Cislo Sestavy/Number of assembly/Nummer der Baugruppe; Verze (Ver.)/Version/Version; Nazev sestavy/Assembly title/Name der Baugruppe; Pozice (Poz.)/Position/Position; Objednaci cislo/Purchase order number/Bestellnummer; Nazev polozky/Volume title/Name der Position; Rozmer/Stock size/Abmessung

## 7.23. Válec upínací / Fixing cylinder / Spannzylinder

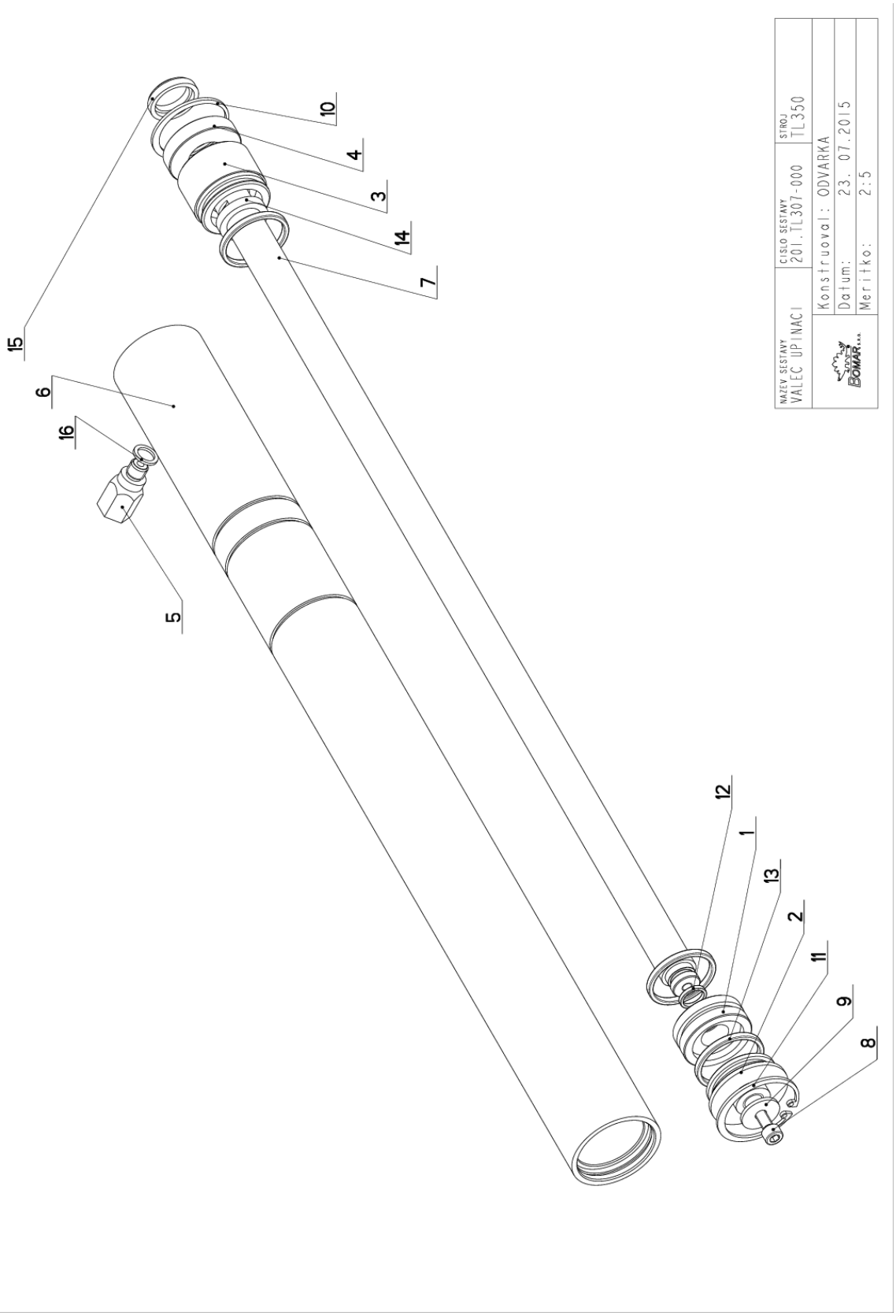

## 7.24. Kusovník / Piece list / Stückliste - Válec upínací / Fixing cylinder / Spannzylinder

| Cislo Sestavy | Ver. | Nazev sestavy |
|---|---|---|
| 201.TL307-000 | 0 | VALEC UPINACI/FIXING CYLINDER/SPANNZYLINDER |

| Poz. | Objednaci cislo | Ver. | Nazev polozky | Rozmer | Ks |
|---|---|---|---|---|---|
| 1 | 30.0305-202 | 0 | PIST / PISTON / KOLBEN | TYC 45 | 1 |
| 2 | 30.1707-104 | 0 | VIKO / COVER / DECKEL | d 45 | 1 |
| 3 | 30.2107-002 | 0 | PRIRUBA / FLANGE / FLANSCHE | TYC 45 | 1 |
| 4 | 30.2107-003 | 0 | VIKO / COVER / DECKEL | d 45 | 1 |
| 5 | 30.3407-103 | 1 | REDUKCE / REDUCTION / ADAPTOR / REDUKTION | TYC 17 | 1 |
| 6 | 30.TL307-001 | 0 | VALEC / / | TRUBKA 52/40 | 1 |
| 7 | 30.TL307-002 | 0 | PISTNICE / / | D 20 | 1 |
| 8 | 90.001.25.017 | 0 | SROUB IMBUS / ALLEN HEAD BOLT / IMBUSSCHRAUBE | M6X16 | 1 |
| 9 | 90.151.50.004 | 0 | PODLOZKA / WASHER / UNTERLEGSCHEIBE | PODLOZKA 6 | 1 |
| 10 | 95.801.006 | 0 | SEGR DIRA / OUTSIDE SAFETY RING / SICHERUNGSRING AUSSEN | POJISTNY KROUZEK 42 | 1 |
| 11 | 95.801.007 | 0 | SEGR DIRA / OUTSIDE SAFETY RING / SICHERUNGSRING AUSSEN | POJISTNY KROUZEK 45 | 1 |
| 12 | 96.002.006 | 0 | KROUZEK O DYNAMICKY / DYNAMIC O RING / O-RING DYNAMISCH | 12x2 NBR 70SH | 1 |
| 13 | 96.002.017 | 0 | KROUZEK O DYNAMICKY / DYNAMIC O RING / O-RING DYNAMISCH | 34x3 NBR 70SH | 3 |
| 14 | 96.041.002 | 0 | TESNENI / SEALING / DICHTUNG | 601-20x28x5 | 1 |
| 15 | 96.060.002 | 0 | KROUZEK STIRACI / SCRAPER RING / ABSTREIFRING | 20x28 | 1 |
| 16 | 96.082.001 | 0 | KROUZEK TESNICI / SEAL RING / DICHTUNGSRING | 10/14x1.5 CU | 1 |

Cislo Sestavy/Number of assembly/Nummer der Baugruppe; Verze (Ver.)/Version/Version; Nazev sestavy/Assembly title/Name der Baugruppe; Pozice (Poz.)/Position/Position;
Objednaci cislo/Purchase order number/Bestellnummer; Nazev polozky/Volume title/Name der Position; Rozmer/Stock size/Abmessung

## 7.25. Spínač tlakový / Pressure switch / Druckschalter

Cislo Sestavy
201.DU40-000

Ver.
0

Nazev sestavy
SPINAC TLAKOVY/PRESSURE SWITCH/DRUCKSCHALTER

| Poz. | Objednaci cislo | Ver. | Nazev polozky | Rozmer | Ks |
|---|---|---|---|---|---|
| 1 | 30.DU40-001 | 0 | PRILOZKA / STRAP / LASCHE | P 8x84 | 1 |
| 2 | 30.DU40-002 | 0 | PRILOZKA / STRAP / LASCHE | P 6x82 | 1 |
| 3 | 30.DU40-004 | 0 | KRYT / COVER / ABDECKUNG | P 1,5x87 | 1 |
| 4 | 30.DU50-003 | 0 | TRUBKA / TUBE / ROHR | TR 16x3 | 4 |
| 5 | 31.DU50-005 | 0 | PRUZINA / SPRING / FEDER | d 3,00 | 4 |
| 6 | 90.001.25.091 | 0 | SROUB IMBUS / ALLEN HEAD BOLT / IMBUSSCHRAUBE | M8X100 | 4 |
| 7 | 90.005.55.018 | 0 | SROUB 6HRANNY / 6 SIDED BOLT / SECHSKANTSCHRAUBE | SROUB M8X35 | 1 |
| 8 | 90.013.27.002 | 0 | SROUB PULKULATY / HALF ROUND BOLT / HALBRUNDSCHRAUBE | M5X6 | 2 |
| 9 | 90.100.55.005 | 0 | MATICE / NUT / MUTTER | MATICE - M8 | 1 |
| 10 | 91.172.009 | 0 | SNIMAC MAGNET. / MAGNETIC SENSOR / MAGNETSENSOR | JPS30D081.5PNOFC | 1 |

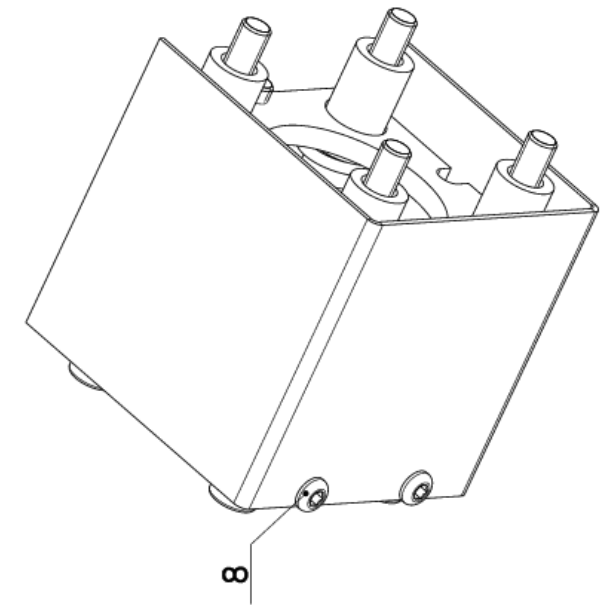


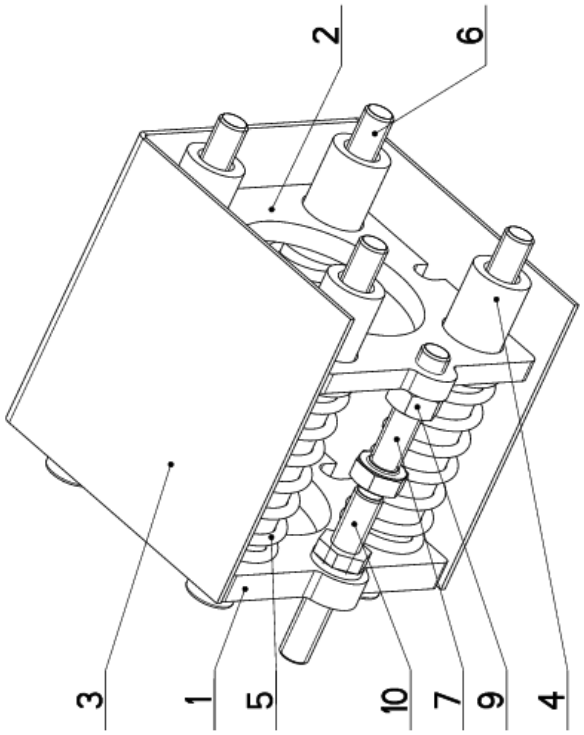

## 7.26. Rameno / Saw arm / Sägerahmen

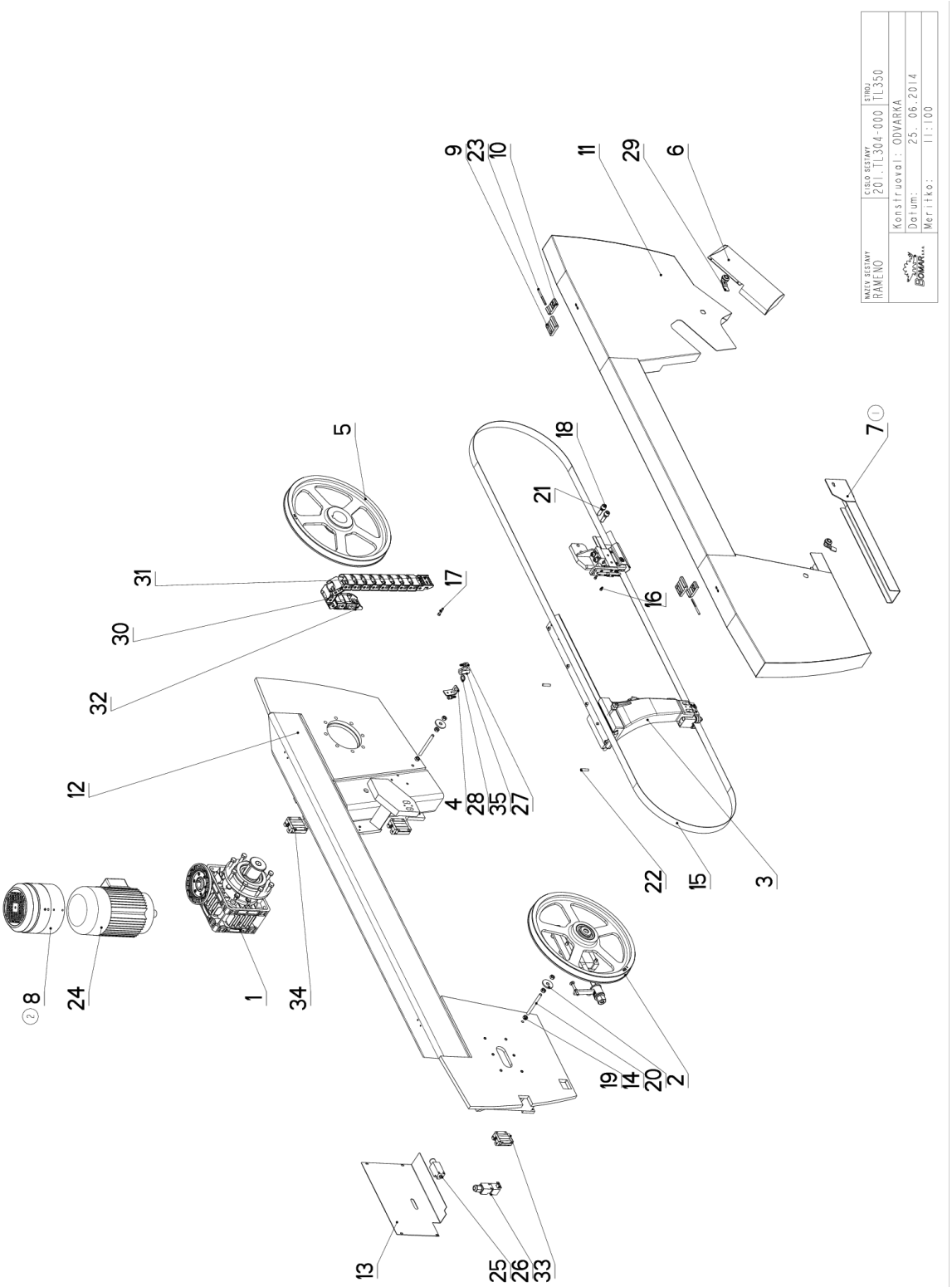

## 7.27. Kusovník / Piece list / Stückliste - Rameno / Saw arm / Sägerahmen

| Cislo Sestavy | Ver. | Nazev sestavy |
|---|---|---|
| 201.TL304-000 | 2 | RAMENO/SAW ARM/SÄGERAHMEN |

| Poz. | Objednaci cislo | Ver. | Nazev polozky | Rozmer | Ks |
|---|---|---|---|---|---|
| 1 | 201.M305-000 | 1 | PREVODOVKA / TRANSMISSION / GETRIEBE | | 1 |
| 2 | 201.M308-100 | 0 | NAPINANI / TENSIONING / SPANNUNG | | 1 |
| 3 | 201.TL310-000 | 1 | VEDENI PASU / BELT GUIDE / SÄGEBANDFÜHRUNG | | 1 |
| 4 | 30.1814-011 | 2 | DRZAK / HOLDER / HALTER | P 3x76 | 1 |
| 5 | 30.2904-003 | 3 | KOLO HNACI / DRIVE WHEEL / ANTRIEBSRAD | ODLITEK | 1 |
| 6 | 30.M304-009 | 0 | KRYT KARTACKU / BRUSH COVER / BÜRSTENABDECKUNG | | 1 |
| 7 | 30.M304-066 (1) | 0 | KRYT PASU / BELT COVER / BANDABDECKUNG | | 1 |
| 8 | 30.M304-070 (2) | 0 | VENTILATOR / VENTILATOR / VENTILATOR | | 1 |
| 9 | 30.R304-006 | 3 | PANT / BOARD / PLATTE | PROFIL | 2 |
| 10 | 30.R304-007 | 2 | PANT / BOARD / PLATTE | PROFIL | 2 |
| 11 | 30.R304-311 | 0 | KRYT / COVER / ABDECKUNG | | 1 |
| 12 | 30.TL304-001 | 1 | RAMENO / SAW ARM / SÄGERAHMEN | | 1 |
| 13 | 30.TL304-018 | 0 | KRYT NAPINANI / TENSIONING COVER / BANDSPANNUNGSABDECKUNG | P 1.5x310 | 1 |
| 14 | 30.Y304-018 | 0 | TYC ZAVITOVA / THREADED POLE / GEWINDESTANGE | M10 | 2 |
| 15 | 44.104.003 | 0 | PAS PILOVY 330 / SAW BELT / SÄGEBAND | 4780x32(4)x0.90 | 1 |
| 16 | 90.001.25.007 | 0 | SROUB IMBUS / ALLEN HEAD BOLT / IMBUSSCHRAUBE | M5X10 | 2 |
| 17 | 90.001.25.020 | 0 | SROUB IMBUS / ALLEN HEAD BOLT / IMBUSSCHRAUBE | M6X30 | 1 |
| 18 | 90.001.25.060 | 0 | SROUB IMBUS / ALLEN HEAD BOLT / IMBUSSCHRAUBE | M12X40 | 2 |
| 19 | 90.100.55.006 | 0 | MATICE / NUT / MUTTER | MATICE _ M10 | 6 |
| 20 | 90.151.50.002 | 0 | PODLOZKA / WASHER / UNTERLEGSCHEIBE | PODLOZKA 12 | 2 |
| 21 | 90.163.00.003 | 0 | PODLOZKA / WASHER / UNTERLEGSCHEIBE | NORD-LOCK | 2 |
| 22 | 90.302.0Z.003 | 0 | KUZEL. KOLIK S ZAV. / TAPER PIN + THREAD / KEGELBOLZEN + GEWINDE | KOLIK 8X36 | 2 |
| 23 | 90.307.0Z.001 | 0 | KOLIK / PIN / BOLZEN | D6 | 2 |
| 24 | 91.001.053 | 0 | ELEKTROMOTOR / ELECTRIC MOTOR / ELEKTROMOTOR | H100KW3 | 1 |
| 25 | 91.173.007 | 0 | SPINAC KONCOVY / END SWITCH / ENDSCHALTER | -RIWK | 1 |
| 26 | 91.173.012 | 0 | SPINAC KONCOVY / END SWITCH / ENDSCHALTER | | 1 |
| 27 | 94.202.002 | 0 | REDUKCE / REDUCTION / ADAPTOR / REDUKTION | REDUKCE 6/R1/4" | 2 |
| 28 | 96.081.001 | 0 | KROUZEK TESNICI / SEAL RING / DICHTUNGSRING | 23x15x3 | 1 |
| 29 | 99.104.002 | 0 | ZAMEK / LOCK / SCHLOSS | ZAMEK CINSKY | 2 |
| 30 | 99.170.053 | 0 | RETEZ ENERGII / ENERGY BELT / ENERGIEKETTE | 37x26-R50 | 13 |
| 31 | 99.171.021 | 0 | RETEZ ENERGII / ENERGY BELT / ENERGIEKETTE | 37x26 | 1 |

Cislo Sestavy/Number of assembly/Nummer der Baugruppe; Verze (Ver.)/Version/Version; Nazev sestavy/Assembly title/Name der Baugruppe; Pozice (Poz.)/Position/Position; Objednaci cislo/Purchase order number/Bestellnummer; Nazev polozky/Volume title/Name der Position; Rozmer/Stock size/Abmessung

## 7.28. Rameno / Saw arm / Sägerahmen

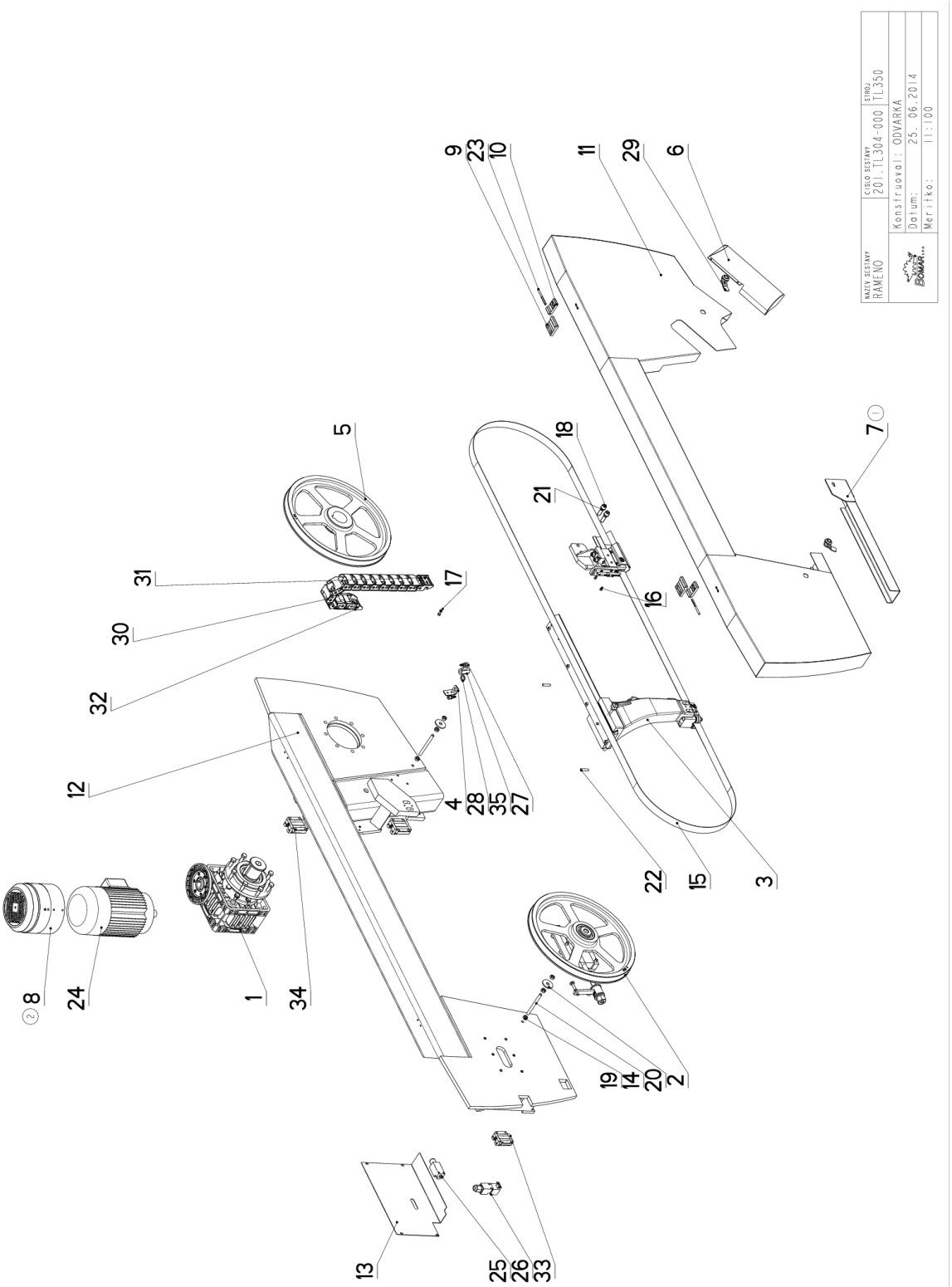

## 7.29. Kusovník / Piece list / Stückliste - Rameno / Saw arm / Sägerahmen

| | | | | | |
|---|---|---|---|---|---|
| 32 | 99.171.022 | 0 | RETEZ ENERGII / ENERGY BELT / ENERGIEKETTE | 37x26 | 1 |
| 33 | 99.201.045 | 0 | VOZIK LINEARNIHO VEDENI / LINEAR GUIDE CART / LINEARFUHRUNGSWAGEN | MSA20ESSF0N | 1 |
| 34 | 99.201.046 | 0 | VEDENI LINEARNI / LINEAR GUIDE / LINEARE FÜHRUNG | MSA25E SS F0 N | 2 |
| 35 | 99.260.003 | 0 | VENTIL / VALVE / VENTIL | 1/4" | 1 |

1.ZRUSEN KRYT PASU 30.M304-016 A NAHR.30.M304-066. 090/ZM099 24.4.2014 SLEZACKOVA
2.ZRUSEN VENTILATOR 30.M304-060 A NAHR.30.M304-070. 120/ZM142 25.6.2014 SLEZACKOVA

Cislo Sestavy/Number of assembly/Nummer der Baugruppe; Verze (Ver.)/Version/Version; Nazev sestavy/Assembly title/Name der Baugruppe; Pozice (Poz.)/Position/Position;
Objednaci cislo/Purchase order number/Bestellnummer; Nazev polozky/Volume title/Name der Position; Rozmer/Stock size/Abmessung

## 7.30. Převodovka / Transmission / Getriebe

Cislo Sestavy 201.M305-000 | Ver. 1 | Nazev sestavy PREVODOVKA/TRANSMISSION /GETRIEBE

| Poz. | Objednaci cislo | Ver. | Nazev polozky | Rozmer | Ks |
|---|---|---|---|---|---|
| 1 | 30.1804-010 | 0 | PODLOZKA / WASHER / UNTERLEGSCHEIBE | d 70 | 1 |
| 2 | 30.2904-005 | 0 | DISTANC / DISTANCE / DISTANZ | TR 55x8 | 1 |
| 3 | 30.2904-006 | 0 | PERO / SPRING / FEDER | HR 14x14 | 1 |
| 4 | 30.2908-001 | 1 | PODLOZKA / WASHER / UNTERLEGSCHEIBE | d 50 | 1 |
| 5 | 30.M305-003 | 2 | HRIDEL / SHAFT / WELLE | d 65 | 1 |
| 6 | 30.M305-005 | 0 | PRIRUBA / FLANGE / FLANSCHE | ODLITEK | 1 |
| 7 | 30.M305-008 | 0 | PERO / SPRING / FEDER | HR 10x8 | 1 |
| 8 | 90.005.55.025 | 0 | SROUB 6HRANNY / 6 SIDED BOLT / SECHSKANTSCHRAUBE | SROUB M10X30 | 8 |
| 9 | 90.005.55.035 | 0 | SROUB 6HRANNY / 6 SIDED BOLT / SECHSKANTSCHRAUBE | SROUB M12X45 | 8 |
| 10 | 90.011.27.025 | 0 | ZAPUSTNY IMBUS / COUNTERSINK BOLT / SENKSCHRAUBE | SROUB M12X25 | 1 |
| 11 | 90.011.27.036 (1) | 0 | ZAPUSTNY IMBUS / COUNTERSINK BOLT / SENKSCHRAUBE | SROUB M10X25 | 1 |
| 12 | 90.150.50.006 | 0 | PODLOZKA / WASHER / UNTERLEGSCHEIBE | PODLOZKA 10,5 | 8 |
| 13 | 95.001.027 | 0 | LOZISKO / BEARING / LAGER | 6309 2RS | 2 |
| 14 | 99.001.129 | 0 | PREVODOVKA SNEKOVA / WORM GEAR TRANSMISSION / SCHNECKENGETRIEBE | | 1 |

1.ZRUS.1xSROUB M12x25(90.011.27.025) A NAHR.1xSROUBEM M10x25(90.011.27.036). 110/ZM112 25.6.2012 SLEZACKOVA

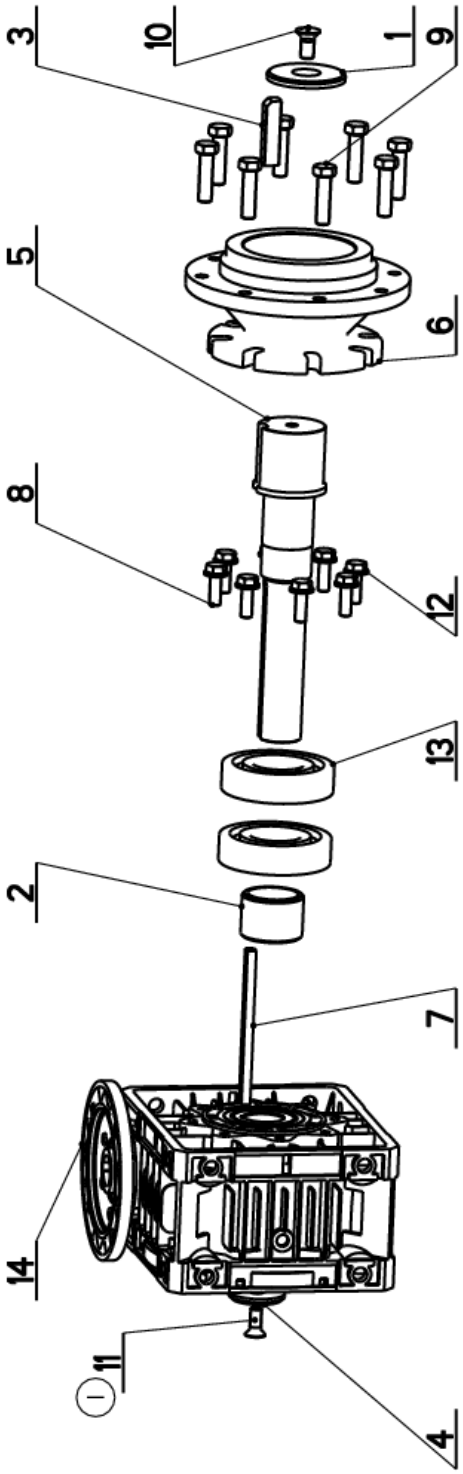


Cislo Sestavy/Number of assembly/Nummer der Baugruppe; Verze (Ver.)/Version/Version; Nazev sestavy/Assembly title/Name der Baugruppe; Pozice (Poz.)/Position/Position;
Objednaci cislo/Purchase order number/Bestellnummer; Nazev polozky/Volume title/Name der Position; Rozmer/Stock size/Abmessung

## 7.31. Napínání / Tensioning / Spannung

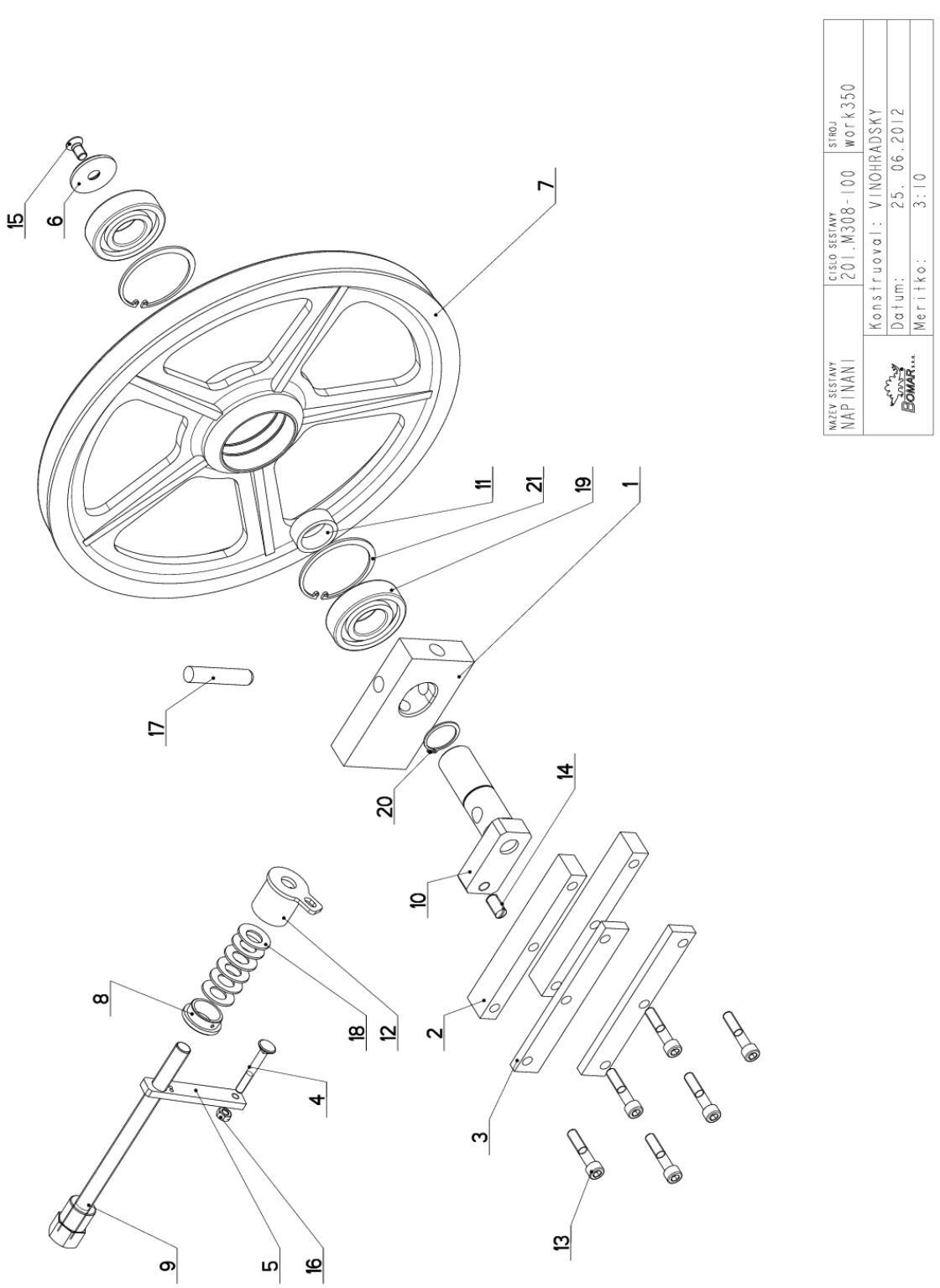

## 7.32. Kusovník / Piece list / Stückliste - Napínání / Tensioning / Spannung

| Cislo Sestavy | Ver. | Nazev sestavy |
|---|---|---|
| 201.M308-100 | 0 | NAPINANI/TENSIONING/SPANNUNG |

| Poz. | Objednaci cislo | Ver. | Nazev polozky | Rozmer | Ks |
|---|---|---|---|---|---|
| 1 | 30.0808-001 | 1 | KOSTKA NAPINANI / TENSIONING CUBE / BANDSPANNUNGSWÜRFEL | 80x30 | 1 |
| 2 | 30.0808-002 | 1 | LISTA VODICI / LEAD TRIM / FÜHRUNGSLEISTE | 30x20 | 2 |
| 3 | 30.0808-006 | 1 | LISTA / TRIM / LEISTE | HR 30x10 | 2 |
| 4 | 30.0808-007 | 0 | SROUB / BOLT / SCHRAUBE | M8x60 | 1 |
| 5 | 30.1708-004 | 4 | DRZAK / HOLDER / HALTER | HR 20x8 | 1 |
| 6 | 30.2908-001 | 1 | PODLOZKA / WASHER / UNTERLEGSCHEIBE | d 50 | 1 |
| 7 | 30.2908-103 | 2 | KOLO NAPINACI / TENSIONING WHEEL / UMLENKRAD | ODLITEK | 1 |
| 8 | 30.3508-004 | 1 | KROUZEK / RING / RING | d42 | 1 |
| 9 | 30.4008-001 | 1 | SROUB / BOLT / SCHRAUBE | | 1 |
| 10 | 30.4808-101 | 4 | CEP NAPINANI / TENSIONING LUG / SPANNUNGSBOLZEN | | 1 |
| 11 | 30.4808-103 | 1 | KROUZEK DISTANCNI / DISTANCE RING / DISTANZRING | d 45 | 1 |
| 12 | 30.6908-102 | 1 | DRZAK / HOLDER / HALTER | | 1 |
| 13 | 90.001.25.052 | 0 | SROUB IMBUS / ALLEN HEAD BOLT / IMBUSSCHRAUBE | M10X50 | 6 |
| 14 | 90.002.20.013 | 0 | SROUB STAVECI / ADJUSTMENT BOLT / STELLSCHRAUBE | SROUB M12X25 | 1 |
| 15 | 90.011.27.008 | 0 | ZAPUSTNY IMBUS / COUNTERSINK BOLT / SENKSCHRAUBE | SROUB M10X20 | 1 |
| 16 | 90.100.55.005 | 0 | MATICE / NUT / MUTTER | MATICE _ M8 | 1 |
| 17 | 90.300.02.003 | 0 | KOLIK VALC. KAL. / CYLINDRICAL PIN TEMPERED / ZYLINDERSTIFT GEHARTET | KOLIK 16X80 | 1 |
| 18 | 90.350.02.002 | 0 | PRUZINA TALIROVA / DISC SPRING / TELLERFEDER | 35,5X18,3X2,0X2,8 | 6 |
| 19 | 95.001.026 | 0 | LOZISKO / BEARING / LAGER | 6307 2RS | 2 |
| 20 | 95.800.014 | 0 | SEGR HRIDEL. / OUTSIDE SAFETY RING / SICHERUNGSRING AUSSEN | POJISTNY KROUZEK 35 | 1 |
| 21 | 95.801.013 | 0 | SEGR DIRA / INSIDE SAFETY RING / SICHERUNGSRING INNEN | POJISTNY KROUZEK 80 | 2 |

## 7.33. Vedení pásu / Belt guide / Sägebandführung

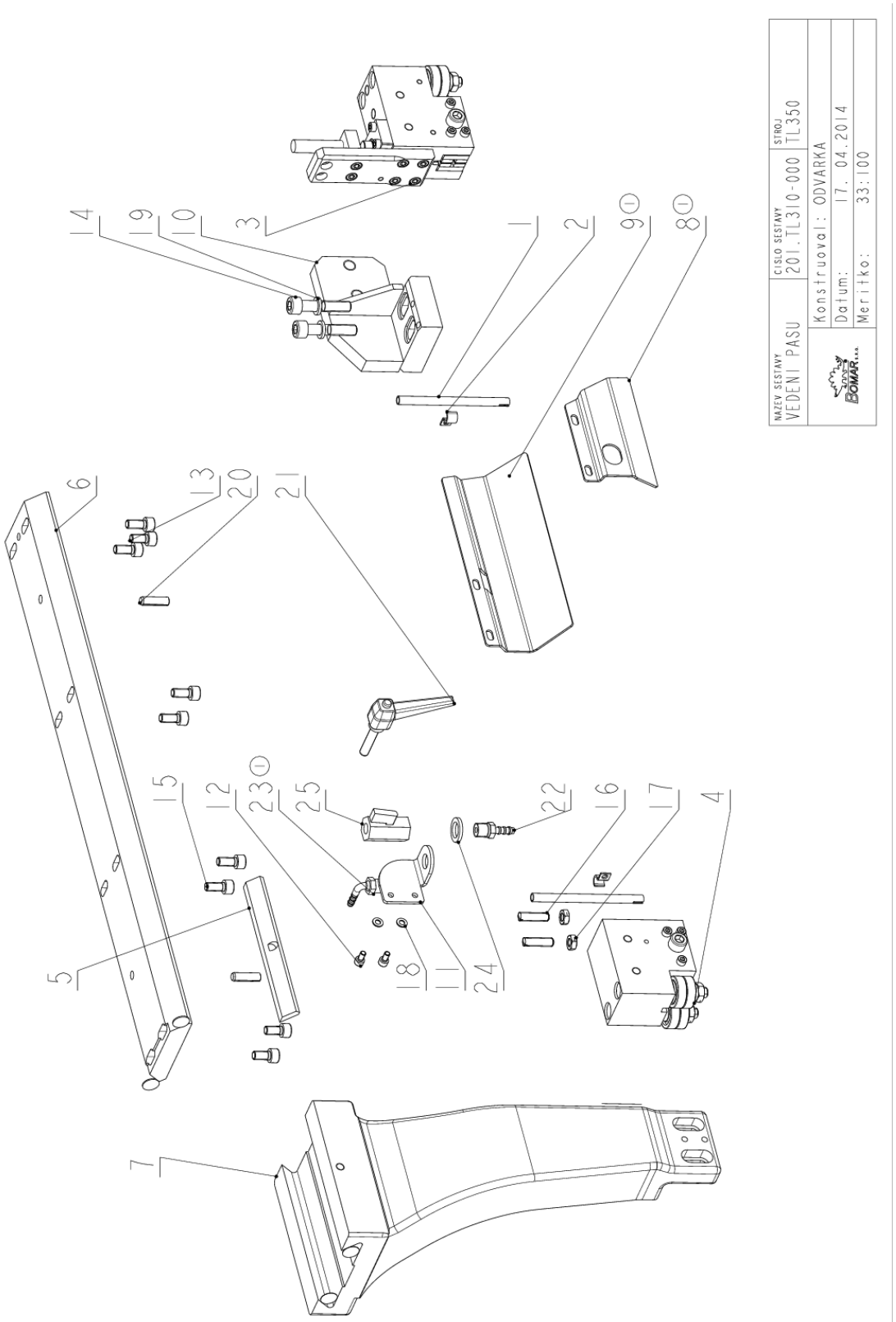

## 7.34. Kusovník / Piece list / Stückliste - Vedení pásu / Belt guide / Sägebandführung

| Cislo Sestavy | Ver. | Nazev sestavy |
|---|---|---|
| 201.TL310-000 | 1 | VEDENI PASU/BELT GUIDE/SÄGEBANDFÜHRUNG |

| Poz. | Objednaci cislo | Ver. | Nazev polozky | Rozmer | Ks |
|---|---|---|---|---|---|
| 1 | 30.3510-004 | 0 | TRUBKA / TUBE / ROHR | TR 8x 1 | 2 |
| 2 | 30.9010-003 | 0 | DRZAK / HOLDER / HALTER | P1.5x10 | 2 |
| 3 | 201.TL310-010 | 1 | KOSTKA VODICI / LEAD CUBE / FÜHRUNGSKLOTZ | | 1 |
| 4 | 201.Y310-300 | 1 | KOSTKA VODICI / LEAD CUBE / FÜHRUNGSKLOTZ | | 1 |
| 5 | 30.M210-008 | 0 | LISTA / TRIM / LEISTE | HR 25x6 | 1 |
| 6 | 30.M310-002 | 3 | LISTA VODICI / LEAD TRIM / FÜHRUNGSLEISTE | HR 90x20 | 1 |
| 7 | 30.M310-004 | 1 | KONZOLA / CONSOLE / KONSOLE | | 1 |
| 8 | 30.M310-056 (1) | 0 | KRYT PASU / BELT COVER / BANDABDECKUNG | P 2x95 | 1 |
| 9 | 30.M310-057 (1) | 0 | KRYT PASU / BELT COVER / BANDABDECKUNG | P 2x95 | 1 |
| 10 | 30.TL310-001 | 0 | KONZOLA / / | | 1 |
| 11 | 30.Y310-008 | | DRZAK / HOLDER / HALTER | P3-50 | 1 |
| 12 | 90.001.25.007 | 0 | SROUB IMBUS / ALLEN HEAD BOLT / IMBUSSCHRAUBE | M5X10 | 2 |
| 13 | 90.001.25.031 | 0 | SROUB IMBUS / ALLEN HEAD BOLT / IMBUSSCHRAUBE | 8x16 | 3 |
| 14 | 90.001.25.052 | 0 | SROUB IMBUS / ALLEN HEAD BOLT / IMBUSSCHRAUBE | M10X50 | 2 |
| 15 | 90.001.25.105 | 0 | SROUB IMBUS / ALLEN HEAD BOLT / IMBUSSCHRAUBE | M8X18 | 6 |
| 16 | 90.002.20.022 | 0 | SROUB STAVECI / ADJUSTMENT BOLT / STELLSCHRAUBE | SROUB M8X30 | 2 |
| 17 | 90.101.55.001 | 0 | MATICE / NUT / MUTTER | MATICE M8 | 2 |
| 18 | 90.150.50.003 | 0 | PODLOZKA / WASHER / UNTERLEGSCHEIBE | PODLOZKA 5,3 | 2 |
| 19 | 90.163.00.004 | 0 | PODLOZKA / WASHER / UNTERLEGSCHEIBE | NORD-LOCK | 2 |
| 20 | 90.303.02.021 | 0 | KOLIK PRUZNY / PIN / BOLZEN | KOLIK 8X28 | 2 |
| 21 | 94.008.003 | 0 | PAKA UPINACI / ATTACHMENT LEVER / SPANNHEBEL | M8x40 | 1 |
| 22 | 94.202.002 | 0 | REDUKCE / REDUCTION / ADAPTOR / REDUKTION | REDUKCE 6/R1/4" | 1 |
| 23 | 94.202.019 (1) | 0 | REDUKCE / / | WES 6 / R 1/4 | 1 |
| 24 | 96.081.001 | 0 | KROUZEK TESNICI / SEAL RING / DICHTUNGSRING | 23x15x3 | 1 |
| 25 | 99.260.003 | 0 | VENTIL / VALVE / VENTIL | 1/4" | 1 |

1.PRIDANA REDUKCE 94.202.019,ZRUS.KRYT 30.M310-006 A NAHR.30.M310-056,ZRUS.KRYT 30.M310-007 A NAHR.30.M310-057, 083,090/ZM099, 17.4.2014, ODVARKA

Cislo Sestavy/Number of assembly/Nummer der Baugruppe; Verze (Ver.)/Version/Version; Nazev sestavy/Assembly title/Name der Baugruppe; Pozice (Poz.)/Position/Position; Objednaci cislo/Purchase order number/Bestellnummer; Nazev polozky/Volume title/Name der Position; Rozmer/Stock size/Abmessung

## 7.35. Kostka vodící / Lead cube / Führungsklotz

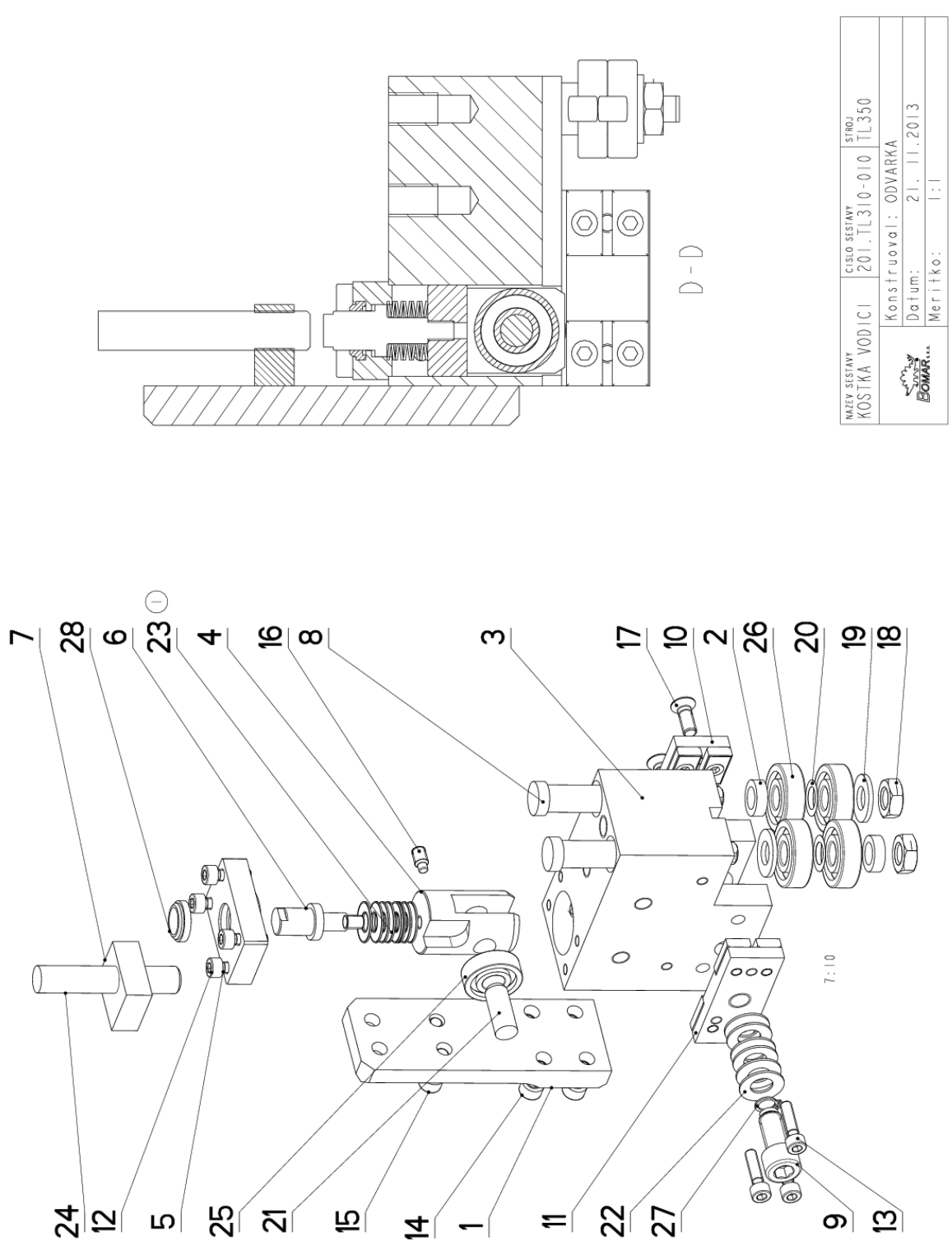

## 7.36. Kusovník / Piece list / Stückliste - Kostka vodící / Lead cube / Führungsklotz

| Cislo Sestavy | Ver. | Nazev sestavy |
|---|---|---|
| 201.TL310-010 | 1 | KOSTKA VODICI/LEAD CUBE/FÜHRUNGSKLOTZ |

| Poz. | Objednaci cislo | Ver. | Nazev polozky | Rozmer | Ks |
|---|---|---|---|---|---|
| 1 | 30.2016-006 | 0 | DESKA / BOARD / PLATTE | HR 40x12 | 1 |
| 2 | 30.C210-403 | 1 | DISTANC / DISTANCE / DISTANZ | TR 16x3 | 2 |
| 3 | 30.TL310-011 | 0 | KOSTKA VODICI / LEAD CUBE / FÜHRUNGSKLOTZ | | 1 |
| 4 | 30.TL310-012 | 0 | DRZAK / HOLDER / HALTER | D 28 | 1 |
| 5 | 30.TL310-013 | 0 | VIKO / COVER / DECKEL | HR 30x15 | 1 |
| 6 | 30.TL310-014 | 0 | JEDNOTKA ODMEROVANI / MEASURING UNIT / MESSEINHEIT | d 16 f8 | 1 |
| 7 | 30.TL310-015 | 0 | KOSTKA / CUBE / WURFEL | HR 25x12 | 1 |
| 8 | 30.Y310-212 | 2 | EXCENTR / CAM / EXZENTER | d 15 | 2 |
| 9 | 30.Y310-306 | 0 | SROUB IMBUS / ALLEN HEAD BOLT / IMBUSSCHRAUBE | M10x25 | 1 |
| 10 | 30.Y310-310 | 0 | DRZAK TVRDOKOVU / POA HOLDER / HM-HALTER | | 1 |
| 11 | 30.Y310-320 | 0 | DRZAK TVRDOKOVU / POA HOLDER / HM-HALTER | | 1 |
| 12 | 90.001.25.009 | 0 | SROUB IMBUS / ALLEN HEAD BOLT / IMBUSSCHRAUBE | M5X16 | 4 |
| 13 | 90.001.25.010 | 0 | SROUB IMBUS / ALLEN HEAD BOLT / IMBUSSCHRAUBE | M5X20 | 3 |
| 14 | 90.001.25.016 | 0 | SROUB IMBUS / ALLEN HEAD BOLT / IMBUSSCHRAUBE | M6X12 | 4 |
| 15 | 90.001.25.017 | 0 | SROUB IMBUS / ALLEN HEAD BOLT / IMBUSSCHRAUBE | M6X16 | 2 |
| 16 | 90.004.2D.002 | 0 | SROUB STAVECI / ADJUSTMENT BOLT / STELLSCHRAUBE | SROUB M6X12 | 1 |
| 17 | 90.011.27.017 | 0 | ZAPUSTNY IMBUS / COUNTERSINK BOLT / SENKSCHRAUBE | SROUB M6X16 | 2 |
| 18 | 90.101.55.002 | 0 | MATICE / NUT / MUTTER | MATICE M10 | 2 |
| 19 | 90.150.50.006 | 0 | PODLOZKA / WASHER / UNTERLEGSCHEIBE | PODLOZKA 10,5 | 2 |
| 20 | 90.154.50.001 | 0 | PODLOZKA / WASHER / UNTERLEGSCHEIBE | 10x16x0.1 | 2 |
| 21 | 90.301.0Z.009 | 0 | KOLIK VALCOVY / CYLINDRICAL PIN SOFT / ZYLINDERSTIFT WEICH | KOLIK 10X26 | 1 |
| 22 | 90.350.0Z.005 | 0 | PRUZINA TALIROVA / DISC SPRING / TELLERFEDER | 20X10.2X1 | 6 |
| 23 | 90.350.0Z.030 (1) | 0 | PRUZINA TALIROVA / DISC SPRING / TELLERFEDER | 18x8,2x0,7x1,25 | 10 |
| 24 | 91.172.017 | 0 | SNIMAC / SENSOR / SENSOR | | 1 |
| 25 | 95.001.004 | 0 | LOZISKO / BEARING / LAGER | 6000 2RS | 1 |
| 26 | 95.001.014 | 0 | LOZISKO / BEARING / LAGER | 6200 2RS | 4 |
| 27 | 95.800.002 | 0 | SEGR HRIDEL. / OUTSIDE SAFETY RING / SICHERUNGSRING AUSSEN | POJISTNY KROUZEK 8 | 1 |
| 28 | 96.060.004 | 0 | KROUZEK STIRACI / SCRAPER RING / ABSTREIFRING | 12x18 | 1 |

1. ZRUS.TAL. PRUZINY 90.350.0Z.003 A NAHR 90.350.0Z.030 A ZMENA POCTU KUSU Z 8 NA 10, 083/ZM099 17.4.2014, ODVARKA

Cislo Sestavy/Number of assembly/Nummer der Baugruppe; Verze (Ver.)/Version/Version; Nazev sestavy/Assembly title/Name der Baugruppe; Pozice (Poz.)/Position/Position; Objednaci cislo/Purchase order number/Bestellnummer; Nazev polozky/Volume title/Name der Position; Rozmer/Stock size/Abmessung

## 7.37. Kostka vodící / Lead cube / Führungsklotz

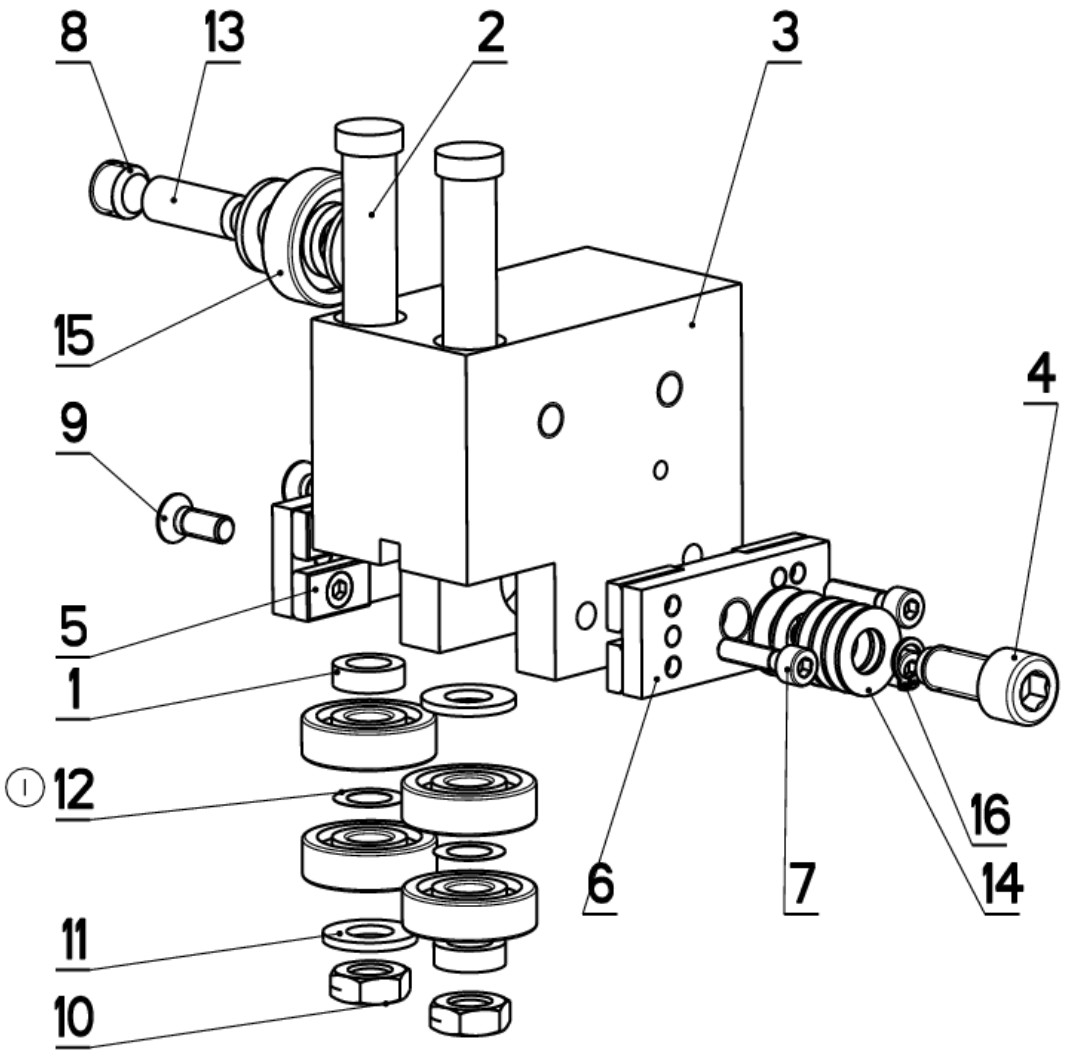


| NAZEV SESTAVY | CISLO SESTAVY | STROJ |
|---|---|---|
| KOSTKA VODICI | 201.Y310-300 | IND360 |
| | Konstruoval: HLADIL | |
| | Datum: 01. 11.2010 | |
| | Meritko: 4:5 | |

## 7.38. Kusovník / Piece list / Stückliste - Kostka vodící / Lead cube / Führungsklotz

| Cislo Sestavy | Ver. | Nazev sestavy |
|---|---|---|
| 201.Y310-300 | 1 | KOSTKA VODICI/LEAD CUBE/FÜHRUNGSKLOTZ |

| Poz. | Objednaci cislo | Ver. | Nazev polozky | Rozmer | Ks |
|---|---|---|---|---|---|
| 1 | 30.C210-403 | 1 | DISTANC / DISTANCE / DISTANZ | TR 16x3 | 2 |
| 2 | 30.Y310-212 | 0 | EXCENTR / CAM / EXZENTER | d 15 | 2 |
| 3 | 30.Y310-301 | 1 | KOSTKA VODICI / LEAD CUBE / FÜHRUNGSKLOTZ | HR 80x50 | 1 |
| 4 | 30.Y310-306 | 0 | SROUB IMBUS / ALLEN HEAD BOLT / IMBUSSCHRAUBE | M10x25 | 1 |
| 5 | 30.Y310-310 | 0 | DRZAK TVRDOKOVU / POA HOLDER / HM-HALTER | | 1 |
| 6 | 30.Y310-320 | 0 | DRZAK TVRDOKOVU / POA HOLDER / HM-HALTER | | 1 |
| 7 | 90.001.25.010 | 0 | SROUB IMBUS / ALLEN HEAD BOLT / IMBUSSCHRAUBE | M5X20 | 3 |
| 8 | 90.002.20.016 | 0 | SROUB STAVECI / ADJUSTMENT BOLT / STELLSCHRAUBE | SROUB M12X10 | 1 |
| 9 | 90.011.27.017 | 0 | SROUB ZAPUSTNY / COUNTERSINK BOLT / SENKSCHRAUBE | SROUB M6X16 | 2 |
| 10 | 90.101.55.002 | 0 | MATICE / NUT / MUTTER | MATICE M10 | 2 |
| 11 | 90.150.50.006 | 0 | PODLOZKA / WASHER / UNTERLEGSCHEIBE | PODLOZKA 10,5 | 4 |
| 12 | 90.154.50.001 (1) | 0 | PODLOZKA / WASHER / UNTERLEGSCHEIBE | 10x16x0.1 | 2 |
| 13 | 90.301.02.001 | 0 | KOLIK VALCOVY / CYLINDRICAL PIN SOFT / ZYLINDERSTIFT WEICH | KOLIK 10X28 | 1 |
| 14 | 90.350.02.005 | 0 | PRUZINA TALIROVA / DISC SPRING / TELLERFEDER | 20X10.2X1 | 6 |
| 15 | 95.001.014 | 0 | LOZISKO / BEARING / LAGER | 6200 2RS | 5 |
| 16 | 95.800.002 | 0 | KROUZEK POJIST.VNEJS / OUTSIDE SAFETY RING / SICHERUNGSRING AUßEN | POJISTNY KROUZEK 8 | 1 |

1.PRIDANA PODLOZKA 90.154.50.001. 277/ZM294 1.11.2010 SLEZACKOVA

## 7.39. Pohon / Cart / Wagen

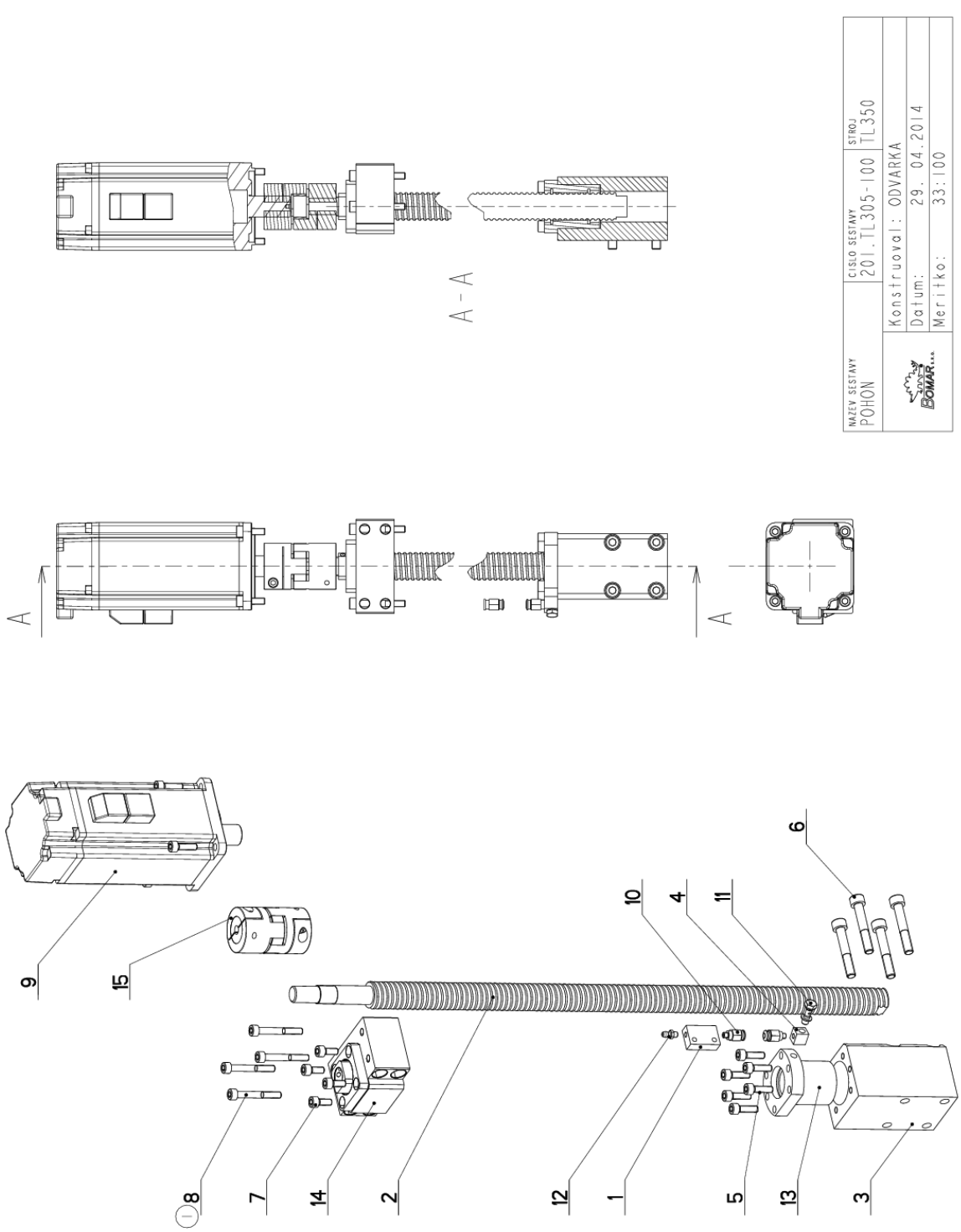

## 7.40. Kusovník / Piece list / Stückliste - Pohon / Cart / Wagen

| Cislo Sestavy | Ver. | Nazev sestavy |
|---|---|---|
| 201.TL305-100 | 1 | POHON/CART/WAGEN |

| Poz. | Objednaci cislo | Ver. | Nazev polozky | Rozmer | Ks |
|---|---|---|---|---|---|
| 1 | 30.6611-504 | 0 | KOSTKA / CUBE / WÜRFEL | HR 20x10 | 1 |
| 2 | 30.TL305-101 | 1 | SROUB / BOLT / SCHRAUBE | KUL. SR. 25x5 | 1 |
| 3 | 30.TL305-103 | 0 | DRZAK / HOLDER / HALTER | HR 60x60 | 1 |
| 4 | 30.TL305-104 | 0 | REDUKCE / REDUCTION / ADAPTOR / REDUKTION | HR 12x12 | 1 |
| 5 | 90.001.25.018 | 0 | SROUB IMBUS / ALLEN HEAD BOLT / IMBUSSCHRAUBE | M6X20 | 10 |
| 6 | 90.001.25.038 | 0 | SROUB IMBUS / ALLEN HEAD BOLT / IMBUSSCHRAUBE | M8X50 | 4 |
| 7 | 90.001.25.092 | 0 | SROUB IMBUS / ALLEN HEAD BOLT / IMBUSSCHRAUBE | M6X14 | 4 |
| 8 | 90.001.25.197 (1) | 0 | SROUB IMBUS / ALLEN HEAD BOLT / IMBUSSCHRAUBE | M6X45 | 4 |
| 9 | 91.001.226 | 0 | SERVOMOTOR / SERVOMOTOR / SERVOMOTOR | ECMA-C2080 | 1 |
| 10 | 93.006.007 | 0 | PNEUMATIKA / PNEUMATICS / PNEUMATIK | | 2 |
| 11 | 93.010.003 | 0 | SROUB / BOLT / SCHRAUBE | M6 | 1 |
| 12 | 95.860.001 | 0 | HLAVICE MAZACI / HEAD / KOPF | KM5 | 1 |
| 13 | 99.212.034 | 0 | MATICE / NUT / MUTTER | 25x5 | 1 |
| 14 | 99.213.002 | 0 | LOZISKO / NUT / MUTTER | BK17 | 1 |
| 15 | 99.280.279 | 0 | SPOJKA / JOINT / KUPPLUNG | EK2-020-A-15-19 | 1 |

1.ZRUS.DRZAK 30.TL305-102,ZRUS.2XSROUB M8x80(90.001.25.067),4xSROUB M8x60(90.001.25.040)
PRIDAN 4xSROUB M6x45 (90.001.25.197). 083/ZM099 29.4.2014 SLEZACKOVA

Cislo Sestavy/Number of assembly/Nummer der Baugruppe; Verze (Ver.)/Version/Version; Nazev sestavy/Assembly title/Name der Baugruppe; Pozice (Poz.)/Position/Position;
Objednaci cislo/Purchase order number/Bestellnummer; Nazev polozky/Volume title/Name der Position; Rozmer/Stock size/Abmessung

## 7.41. Podstavec svěráku / Vice base / Schraubstockuntersatz

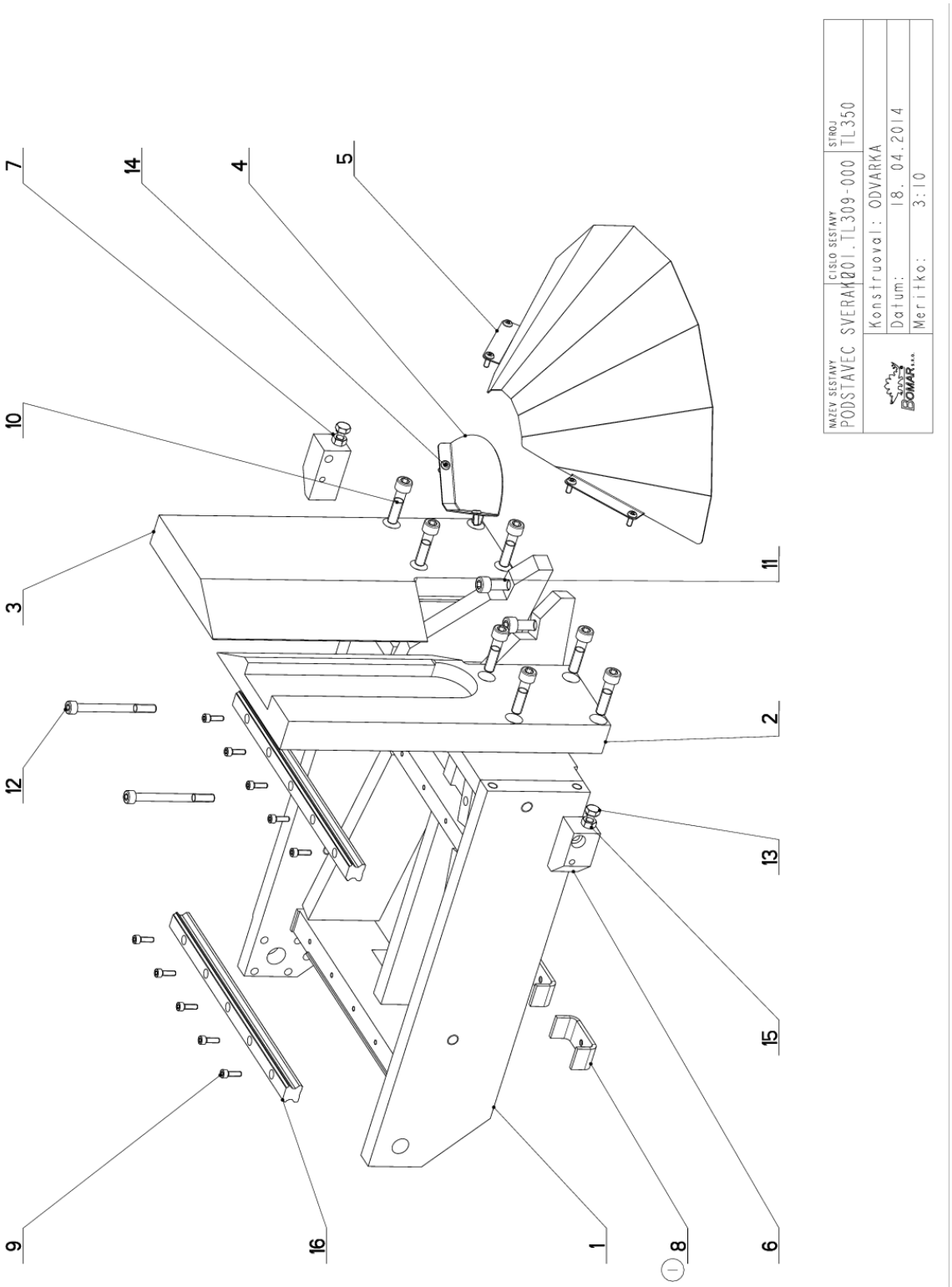

## 7.42. Kusovník / Piece list / Stückliste - Podstavec svěráku / Vice base / Schraubstockuntersatz

| Cislo Sestavy | Ver. | Nazev sestavy |
|---|---|---|
| 201.TL309-000 | 1 | PODSTAVEC SVERAKU/VICE BASE/SCHRAUBSTOCKUNTERSATZ |

| Poz. | Objednaci cislo | Ver. | Nazev polozky | Rozmer | Ks |
|---|---|---|---|---|---|
| 1 | 30.TL309-001 | 1 | PODSTAVEC SVERAKU / VICE BASE / SCHRAUBSTOCKUNTERSATZ | | 1 |
| 2 | 30.TL309-002 | 0 | CELIST / BOARD / PLATTE | P 35x176 | 1 |
| 3 | 30.TL309-003 | 0 | CELIST / BOARD / PLATTE | P 35x176 | 1 |
| 4 | 30.TL309-004 | 0 | KRYT / COVER / ABDECKUNG | P 1x90 | 1 |
| 5 | 30.TL309-005 | 0 | KRYT / COVER / ABDECKUNG | P 1x273 | 1 |
| 6 | 30.TL309-006 | 0 | DORAZ / STOP PIECE / ANSCHLAG | HR 30x30 | 1 |
| 7 | 30.TL309-007 | 0 | DORAZ / STOP PIECE / ANSCHLAG | HR 30x30 | 1 |
| 8 | 30.TL309-009 (1) | 0 | DRZAK / HOLDER / HALTER | HR 25x4 | 2 |
| 9 | 90.001.25.009 | 0 | SROUB IMBUS / ALLEN HEAD BOLT / IMBUSSCHRAUBE | M5X16 | 10 |
| 10 | 90.001.25.050 | 0 | SROUB IMBUS / ALLEN HEAD BOLT / IMBUSSCHRAUBE | M10X40 | 8 |
| 11 | 90.001.25.052 | 0 | SROUB IMBUS / ALLEN HEAD BOLT / IMBUSSCHRAUBE | M10X50 | 2 |
| 12 | 90.001.25.078 | 0 | SROUB IMBUS / ALLEN HEAD BOLT / IMBUSSCHRAUBE | M8X90 | 2 |
| 13 | 90.005.55.019 | 0 | SROUB 6HRANNY / 6 SIDED BOLT / SECHSKANTSCHRAUBE | SROUB M8X40 | 2 |
| 14 | 90.013.27.004 | 0 | SROUB PULKULATY / HALF ROUND BOLT / HALBRUNDSCHRAUBE | M5X12 | 6 |
| 15 | 90.100.55.005 | 0 | MATICE / NUT / MUTTER | MATICE _ M8 | 2 |
| 16 | 99.200.358 | 0 | VEDENI LINEARNI / LINEAR GUIDE / LINEARE FUHRUNG | MSA 20R 310 35/35N | 2 |

1.ZRUSEN DRZAK 94.204.005 A NAHR.DRZAKEM 30.TL309-009, 083/ZM099, 18.4.2014, ODVARKA

Cislo Sestavy/Number of assembly/Nummer der Baugruppe; Verze (Ver.)/Version/Version; Nazev sestavy/Assembly title/Name der Baugruppe; Pozice (Poz.)/Position/Position; Objednaci cislo/Purchase order number/Bestellnummer; Nazev polozky/Volume title/Name der Position; Rozmer/Stock size/Abmessung

## 7.43. Brzda / Brake / Bremse
## Topline 510.350 DGH

Cislo Sestavy
201.TL309-020

Ver.
0

Nazev sestavy
BRZDA/BRAKE/BREMSE

| Poz. | Objednaci cislo | Ver. | Nazev polozky | Rozmer | Ks |
|---|---|---|---|---|---|
| 1 | 30.TL309-021 | 0 | KOSTKA / CUBE / WURFEL | HR 50x20 | 1 |
| 2 | 30.TL309-022 | 0 | TYC / COVER / ABDECKUNG | D 15 | 1 |
| 3 | 90.001.25.022 | 0 | SROUB IMBUS / ALLEN HEAD BOLT / IMBUSSCHRAUBE | M6X40 | 4 |
| 4 | 90.001.25.042 | 0 | SROUB IMBUS / ALLEN HEAD BOLT / IMBUSSCHRAUBE | M8X120 | 1 |
| 5 | 90.100.55.004 | 0 | MATICE / NUT / MUTTER | MATICE - M6 | 4 |
| 6 | 90.150.50.004 | 0 | PODLOZKA / WASHER / UNTERLEGSCHEIBE | PODLOZKA 6.4 | 4 |
| 7 | 94.008.005 | 0 | KLICKA / HANDLE / KURBEL | M10 | 1 |

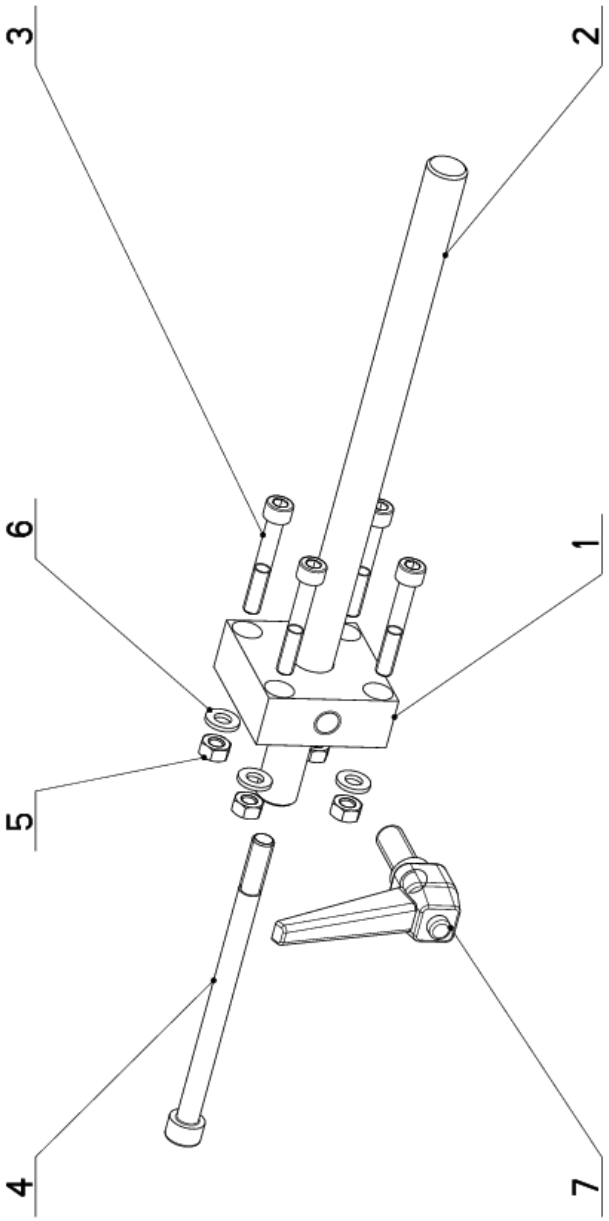


Cislo Sestavy/Number of assembly/Nummer der Baugruppe; Verze (Ver.)/Version/Version; Nazev sestavy/Assembly title/Name der Baugruppe; Pozice (Poz.)/Position/Position;
Objednaci cislo/Purchase order number/Bestellnummer; Nazev polozky/Volume title/Name der Position; Rozmer/Stock size/Abmessung

## 7.44. Pohon/ Drive/ Antrieb Topline 510.350 DGH-A

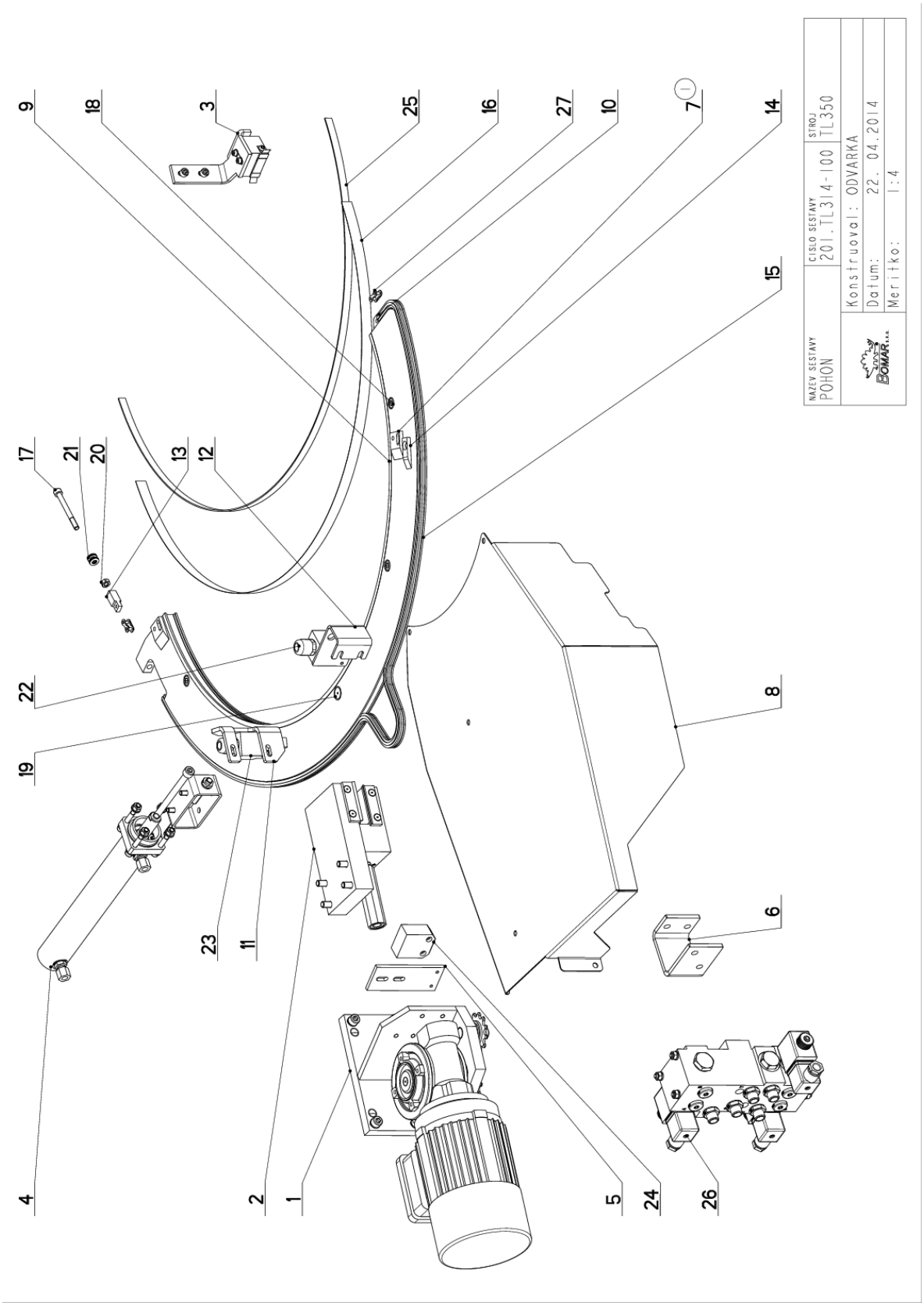

## 7.45. Kusovník / Piece list / Stückliste - Pohon/ Drive/ Antrieb Topline 510.350 DGH-A

| Cislo Sestavy | Ver. | Nazev sestavy |
|---|---|---|
| 201.TL314-100 | 1 | POHON/DRIVE /ANTRIEB |

| Poz. | Objednaci cislo | Ver. | Nazev polozky | Rozmer | Ks |
|---|---|---|---|---|---|
| 1 | 201.TL314-020 | 0 | POHON / DRIVE / ANTRIEB | | 1 |
| 2 | 201.TL314-030 | 0 | BRZDA / BRAKE / BREMSE | | 1 |
| 3 | 201.TL314-040 | 0 | SNIMAC MAGNET. / MAGNETIC SENSOR / MAGNETSENSOR | | 1 |
| 4 | 201.TL314-050 | 0 | POHON / DRIVE / ANTRIEB | | 1 |
| 5 | 30.TL314-004 | 0 | DRZAK / HOLDER / HALTER | P 5x40 | 1 |
| 6 | 30.TL314-010 | 0 | DRZAK / HOLDER / HALTER | P 5x50 | 1 |
| 7 | 30.TL314-011 (1) | 0 | DORAZ / STOP PIECE / ANSCHLAG | HR 25x5 | 2 |
| 8 | 30.TL314-013 | 0 | KRYT MOTORU / MOTOR COVER / MOTORABDECKUNG | P 1,5x538 | 1 |
| 9 | 30.TL314-014 | 0 | LISTA / TRIM / LEISTE | HR 18x6 | 1 |
| 10 | 30.TL314-015 | 0 | SEGMENT / SEGMENT / SEGMENT | P 12x415 | 1 |
| 11 | 30.TL314-018 | 0 | DRZAK / HOLDER / HALTER | P 5x84 | 1 |
| 12 | 30.TL314-019 | 0 | DRZAK / HOLDER / HALTER | P 3x50 | 1 |
| 13 | 30.V301-021 | 0 | KOSTKA NAPINANI / TENSIONING CUBE / BANDSPANNUNGSWÜRFEL | HR 10x10 | 1 |
| 14 | 30.V301-127 | 0 | DORAZ / STOP PIECE / ANSCHLAG | HR 12x5 | 1 |
| 15 | 49.200.042 | 0 | RETEZ / CHAIN / KETTE | 081 146cl. | 1 |
| 16 | 55.800.009 | 0 | PLECH / PLATE / BLECH | P 0,3 - 15 | 1 |
| 17 | 90.001.25.026 | 0 | SROUB IMBUS / ALLEN HEAD BOLT / IMBUSSCHRAUBE | M6X65 | 1 |
| 18 | 90.001.25.031 | 0 | SROUB IMBUS / ALLEN HEAD BOLT / IMBUSSCHRAUBE | 8x16 | 4 |
| 19 | 90.011.27.016 | 0 | ZAPUSTNY IMBUS / COUNTERSINK BOLT / SENKSCHRAUBE | SROUB M8X25 | 1 |
| 20 | 90.100.55.004 | 0 | MATICE / NUT / MUTTER | MATICE _ M6 | 1 |
| 21 | 90.350.02.001 | 0 | TALIROVA PRUZINA / DISC SPRING / TELLERFEDER | 12,5X6,2X0,5X0,85 | 10 |
| 22 | 91.070.019 | 0 | VYVODKA / BUSHING / TÜLLE | M16x1.5 | 2 |
| 23 | 91.173.011 | 0 | SPINAC KONC.S KLADK. / END SWITCH WITH PULLEY / ENDSCHALTER MIT ROLLE | PZ-FK3302-M1 | 2 |
| 24 | 91.173.016 | 0 | SPINAC KONCOVY / END SWITCH / ENDSCHALTER | KONCAK | 1 |
| 25 | 91.271.002 | 0 | PASKA MAGNETICKA / MAGNETIC TAPE / MAGNETBAND | ELGO MB20.50 | 1 |
| 26 | 92.153.107 | 0 | BLOK / BLOCK / BLOCK | S103_281_1 | 1 |
| 27 | 99.270.046 | 0 | CLANEK SPOJ.-RETEZ / JOINT CUT ELEMENT / KETTENVERBINDUNGSGLIED | 081 | 2 |

1.DOPLNEN 2x DORAZ S DRAZKOU 30.TL314-011, 083/ZM099, 22.4.2014, ODVARKA

Cislo Sestavy/Number of assembly/Nummer der Baugruppe; Verze (Ver.)/Version/Version; Nazev sestavy/Assembly title/Name der Baugruppe; Pozice (Poz.)/Position/Position; Objednaci cislo/Purchase order number/Bestellnummer; Nazev polozky/Volume title/Name der Position; Rozmer/Stock size/Abmessung

## 7.46. Pohon/ Drive/ Antrieb
## Topline 510.350 DGH-A

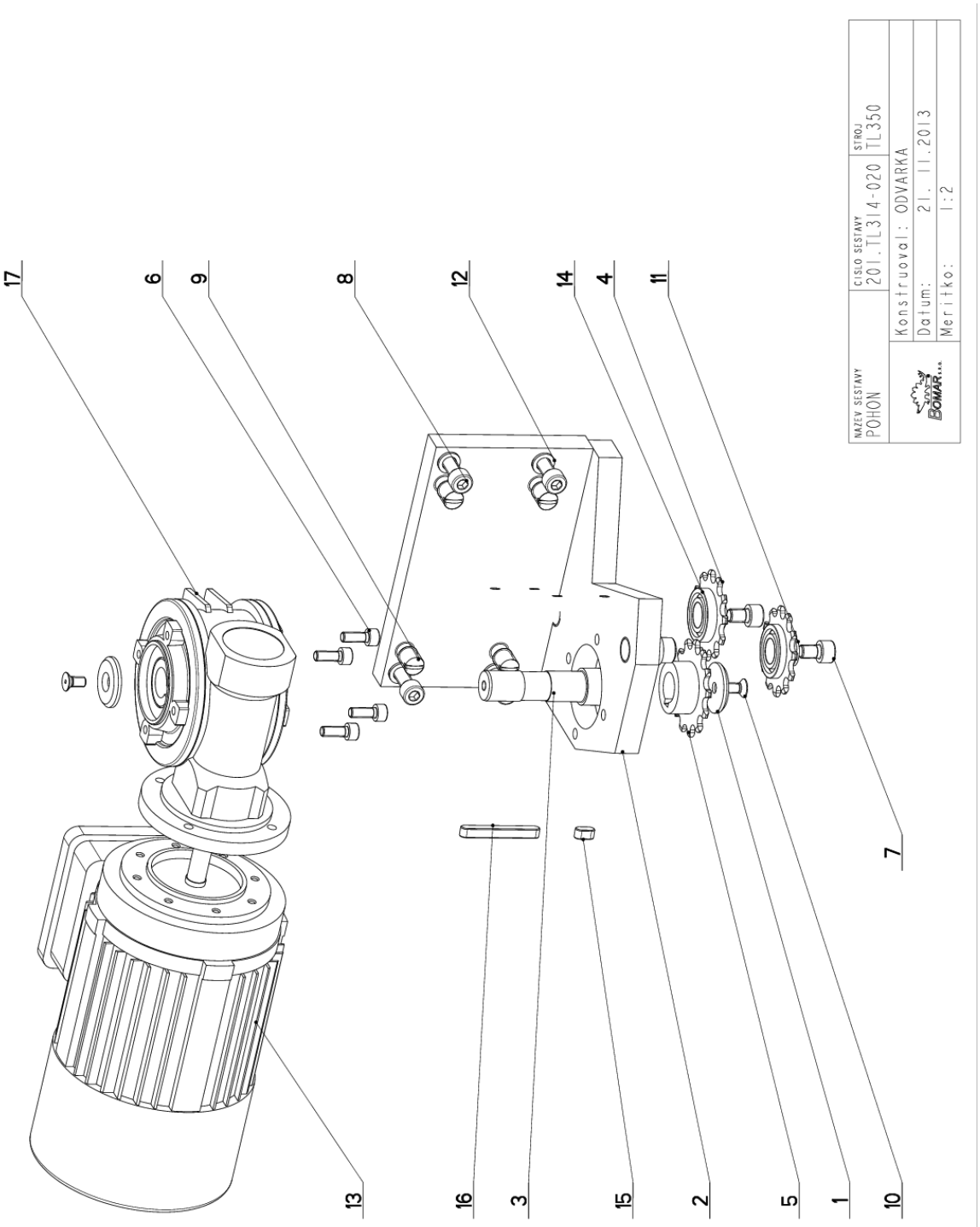

## 7.47. Kusovník / Piece list / Stückliste - Pohon/ Drive/ Antrieb Topline 510.350 DGH-A

| Cislo Sestavy | Ver. | Nazev sestavy |
|---|---|---|
| 201.TL314-020 | 0 | POHON/DRIVE /ANTRIEB |

| Poz. | Objednaci cislo | Ver. | Nazev polozky | Rozmer | Ks |
|---|---|---|---|---|---|
| 1 | 30.1514-503 | 0 | PODLOZKA / WASHER / UNTERLEGSCHEIBE | d 30 | 2 |
| 2 | 30.TL314-021 | 0 | KONZOLA / CONSOLE / KONSOLE | | 1 |
| 3 | 30.V302-083 | 0 | HRIDEL / SHAFT / WELLE | d 22 | 1 |
| 4 | 30.V302-085 | 0 | KOLO RETEZOVE / CHAIN WHEEL / KETTENRAD | 081-12z DISK | 2 |
| 5 | 30.V302-086 | 0 | KOLO RETEZOVE / CHAIN WHEEL / KETTENRAD | 081-13z NABOJ | 1 |
| 6 | 90.001.25.017 | 0 | SROUB IMBUS / ALLEN HEAD BOLT / IMBUSSCHRAUBE | M6X16 | 4 |
| 7 | 90.001.25.029 | 0 | SROUB IMBUS / ALLEN HEAD BOLT / IMBUSSCHRAUBE | M8X12 | 2 |
| 8 | 90.001.25.033 | 0 | SROUB IMBUS / ALLEN HEAD BOLT / IMBUSSCHRAUBE | 8x25 | 4 |
| 9 | 90.002.20.017 | 0 | SROUB STAVECI / ADJUSTMENT BOLT / STELLSCHRAUBE | SROUB M12X16 | 4 |
| 10 | 90.011.27.005 | 0 | ZAPUSTNY IMBUS / COUNTERSINK BOLT / SENKSCHRAUBE | SROUB M6X12 | 2 |
| 11 | 90.150.50.005 | 0 | PODLOZKA / WASHER / UNTERLEGSCHEIBE | PODLOZKA 8,4 | 2 |
| 12 | 90.163.00.002 | 0 | PODLOZKA / WASHER / UNTERLEGSCHEIBE | PODLOZKA 8 | 4 |
| 13 | 91.001.239 | 0 | ELEKTROMOTOR / ELECTRIC MOTOR / ELEKTROMOTOR | 0,25kW,4P,B14,63,230/400 | 1 |
| 14 | 95.001.006 | 0 | LOZISKO / BEARING / LAGER | 6002 2RS | 2 |
| 15 | 95.810.004 | 0 | PERO TESNE / SPRING / FEDER | PERO 6X6X12 | 1 |
| 16 | 95.810.034 | 0 | PERO TESNE / SPRING / FEDER | PERO 6X6X50 | 1 |
| 17 | 99.001.215 | 0 | PREVODOVKA SNEKOVA / WORM GEAR TRANSMISSION / SCHNECKENGETRIEBE | CH 04; P; i=70; 63, B14 | 1 |

Cislo Sestavy/Number of assembly/Nummer der Baugruppe; Verze (Ver.)/Version/Version; Nazev sestavy/Assembly title/Name der Baugruppe; Pozice (Poz.)/Position/Position; Objednaci cislo/Purchase order number/Bestellnummer; Nazev polozky/Volume title/Name der Position; Rozmer/Stock size/Abmessung

## 7.48. Brzda/ Brake/ Bremse
## Topline 510.350 DGH-A

Cislo Sestavy 201.TL314-030 | Ver. 0 | Nazev sestavy BRZDA/BRAKE/BREMSE

| Poz. | Objednaci cislo | Ver. | Nazev polozky | Rozmer | Ks |
|---|---|---|---|---|---|
| 1 | 30.6007-108 | 1 | PRODLOUZENI / / | SK 22 | 1 |
| 2 | 30.TL314-031 | 0 | DESKA / BOARD / PLATTE | HR 80x30 | 1 |
| 3 | 30.TL314-032 | 0 | CELIST POHYBLIVA / MOVING JAW / BEWEGLICHE BACKE | HR 80x40 | 1 |
| 4 | 30.V307-253 | 0 | PIST / PISTON / KOLBEN | d 40 | 2 |
| 5 | 30.V307-254 | 0 | STERAC / WIPER / ABSTREIFER | BA18 | 4 |
| 6 | 90.001.25.036 | 0 | SROUB IMBUS / ALLEN HEAD BOLT / IMBUSSCHRAUBE | M8X40 | 6 |
| 7 | 90.001.55.083 | 0 | SROUB IMBUS / ALLEN HEAD BOLT / IMBUSSCHRAUBE | M8X30 | 4 |
| 8 | 90.002.20.003 | 0 | SROUB STAVECI / ADJUSTMENT BOLT / STELLSCHRAUBE | SROUB M5X6 | 2 |
| 9 | 90.011.27.003 | 0 | SROUB ZAPUSTNY / COUNTERSINK BOLT / SENKSCHRAUBE | SROUB M5X10 | 8 |
| 10 | 96.002.003 | 0 | KROUZEK O DYNAMICKY / DYNAMIC O RING / O-RING DYNAMISCH | 6X2 | 1 |
| 11 | 96.020.005 | 0 | KROUZEK TESNICI / SEAL RING / DICHTUNGSRING | 39.2X5.33 | 2 |
| 12 | 96.082.002 | 0 | TESNENI / SEAL RING / DICHTUNGSRING | 13/17x1.5 CU | 1 |

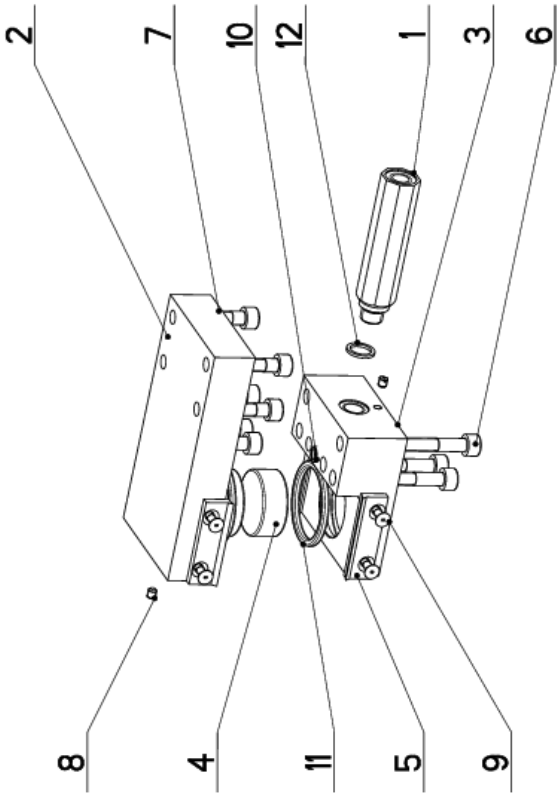


Cislo Sestavy/Number of assembly/Nummer der Baugruppe; Verze (Ver.)/Version/Version; Nazev sestavy/Assembly title/Name der Baugruppe; Pozice (Poz.)/Position/Position; Objednaci cislo/Purchase order number/Bestellnummer; Nazev polozky/Volume title/Name der Position; Rozmer/Stock size/Abmessung

# 7.49. Snímač magnetický/ Magnetic sensor/ Magnetsensor Topline 510.350 DGH-A

| Cislo Sestavy | Ver. | Nazev sestavy |
|---|---|---|
| 201.TL314-040 | 0 | SNIMAC MAGNET./MAGNETIC SENSOR/MAGNETSENSOR |

| Poz. | Objednaci cislo | Ver. | Nazev polozky | Rozmer | Ks |
|---|---|---|---|---|---|
| 1 | 30.TL314-042 | 0 | DRZAK / HOLDER / HALTER | P 5x75 | 1 |
| 2 | 30.V302-131 | 0 | DRZAK / HOLDER / HALTER | HR 25x35 | 1 |
| 3 | 92.270.018 | 0 | SNIMAC MAGNET. / MAGNETIC SENSOR / MAGNETSENSOR | ELGO | 1 |
| 4 | 31.1605-121 | 0 | PRUZINA / SPRING / FEDER | 1x9.5x12x4 | 1 |
| 5 | 30.1504-017 | 0 | STERAC / WIPER / ABSTREIFER | P 0,3x11 | 2 |
| 6 | 30.V302-133 | 0 | PERO / SPRING / FEDER | HR 10x6 | 1 |
| 7 | 90.150.50.002 | 0 | PODLOZKA / WASHER / UNTERLEGSCHEIBE | PODLOZKA 4,3 | 2 |
| 8 | 90.001.25.004 | 0 | SROUB IMBUS / ALLEN HEAD BOLT / IMBUSSCHRAUBE | M4X16 | 2 |
| 9 | 90.013.27.002 | 0 | SROUB PULKULATY / HALF ROUND BOLT / HALBRUNDSCHRAUBE | M5X6 | 2 |
| 10 | 90.013.27.007 | 0 | SROUB PULKULATY / HALF ROUND BOLT / HALBRUNDSCHRAUBE | M6X10 | 1 |
| 11 | 90.001.25.092 | 0 | SROUB IMBUS / ALLEN HEAD BOLT / IMBUSSCHRAUBE | M6X14 | 2 |

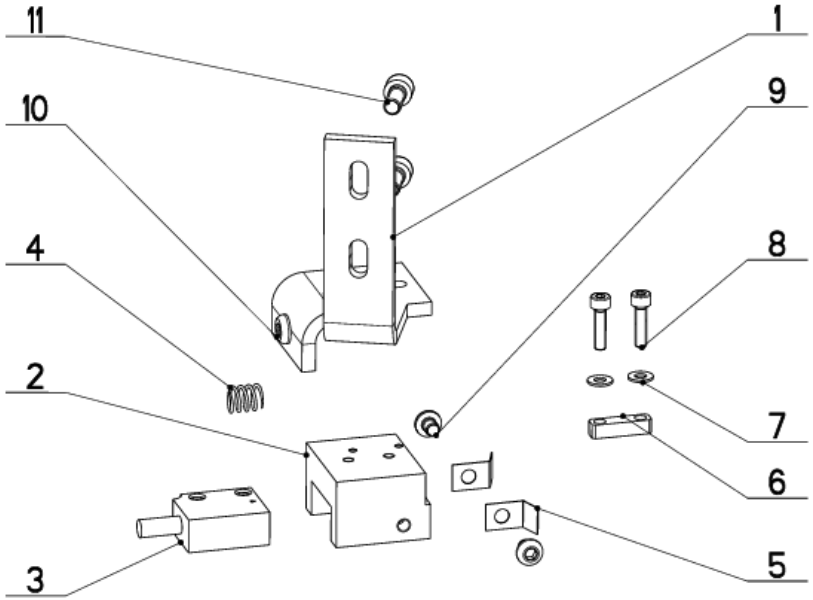


Cislo Sestavy/Number of assembly/Nummer der Baugruppe; Verze (Ver.)/Version/Version; Nazev sestavy/Assembly title/Name der Baugruppe; Pozice (Poz.)/Position/Position; Objednaci cislo/Purchase order number/Bestellnummer; Nazev polozky/Volume title/Name der Position; Rozmer/Stock size/Abmessung

| Cislo Sestavy | Ver. | Nazev sestavy |
|---|---|---|
| 201.TL314-050 | 0 | POHON/DRIVE /ANTRIEB |

| Poz. | Objednaci cislo | Ver. | Nazev polozky | Rozmer | Ks |
|---|---|---|---|---|---|
| 1 | 201.TL307-100 | 0 | VALEC POMOCNY / AUXILIARY CYLINDER / HILFSZYLINDER | | 1 |
| 2 | 30.6803-006 | 0 | VIKO / COVER / DECKEL | TYC 50x12 | 1 |
| 3 | 90.001.25.042 | 0 | SROUB IMBUS / ALLEN HEAD BOLT / IMBUSSCHRAUBE | M8X120 | 1 |
| 4 | 90.001.25.023 | 0 | SROUB IMBUS / ALLEN HEAD BOLT / IMBUSSCHRAUBE | M6X50 | 4 |
| 5 | 90.150.50.004 | 0 | PODLOZKA / WASHER / UNTERLEGSCHEIBE | PODLOZKA 6,4 | 8 |
| 6 | 90.100.55.004 | 0 | MATICE / NUT / MUTTER | MATICE _ M6 | 4 |
| 7 | 30.TL314-051 | 0 | TRUBKA / TUBE / ROHR | J 80x40x3 | 1 |
| 8 | 91.172.009 | 0 | SPINAC / SWITCH / SCHALTER | JPS30D081.5PNOFC | 2 |
| 9 | 90.001.25.016 | 0 | SROUB IMBUS / ALLEN HEAD BOLT / IMBUSSCHRAUBE | M6X12 | 2 |

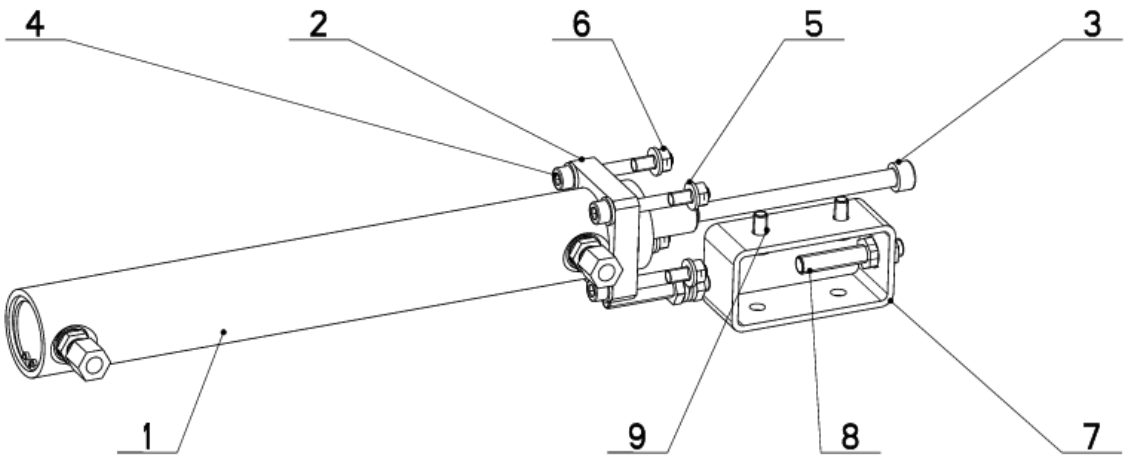


Cislo Sestavy/Number of assembly/Nummer der Baugruppe; Verze (Ver.)/Version/Version; Nazev sestavy/Assembly title/Name der Baugruppe; Pozice (Poz.)/Position/Position; Objednaci cislo/Purchase order number/Bestellnummer; Nazev polozky/Volume title/Name der Position; Rozmer/Stock size/Abmessung

## 7.51. Válec pomocný/ Auxiliary cylinder/ Hilfzylinder Topline 510.350 DGH-A

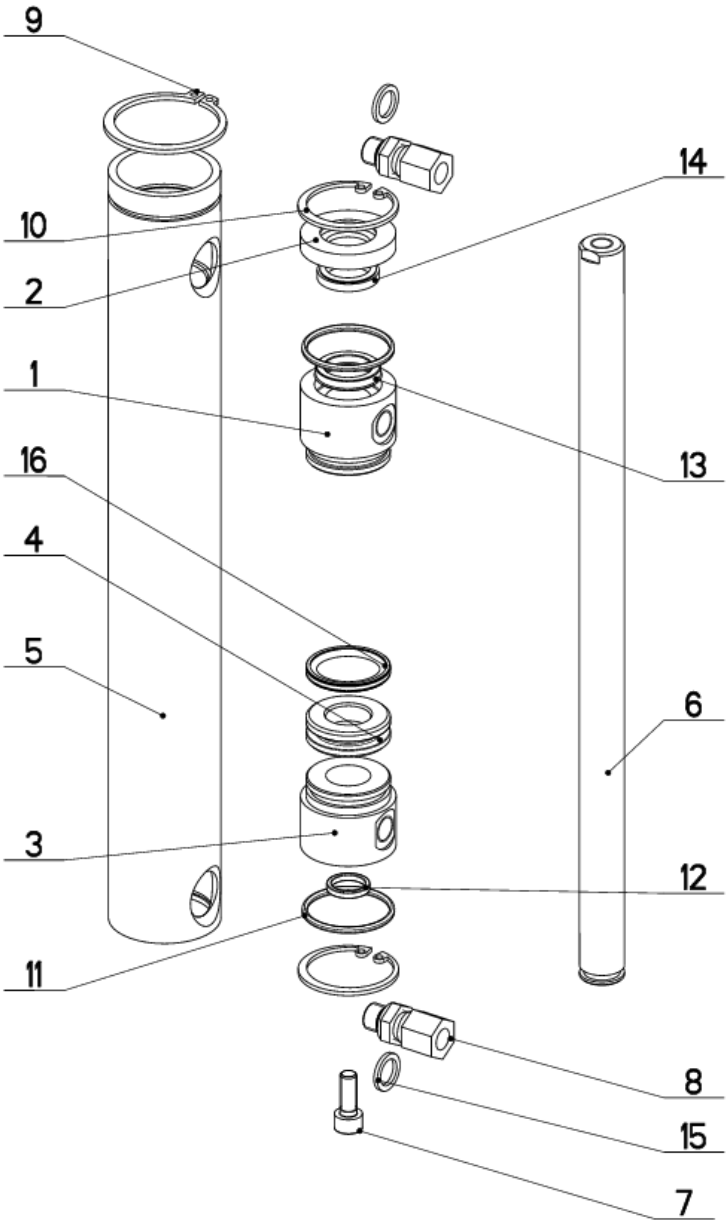


| | | | |
|---|---|---|---|
| ČÍSLO SESTAVY 201.TL307-100 | | MNOZSTVÍ | SCHVÁLIL |
| MERÍTKO: 1:2 | DATUM VYDÁNO: | | |
| KONSTR.: ODVARKA | DATUM POZADOVÁNO: | | |
| DATUM: 19. 06.2013 | VYDAL: | | |
| NÁZEV SESTAVY VALEC POMOCNY | | | |

## 7.52. Kusovník / Piece list / Stückliste - Válec pomocný/ Auxiliary cylinder/ Hilfzylinder Topline 510.350 DGH-A

| Cislo Sestavy | Ver. | Nazev sestavy |
|---|---|---|
| 201.TL307-100 | 0 | VALEC POMOCNY/AUXILIARY CYLINDER/HILFSZYLINDER |

| Poz. | Objednaci cislo | Ver. | Nazev polozky | Rozmer | Ks |
|---|---|---|---|---|---|
| 1 | 30.6807-103 | 1 | VIKO / COVER / DECKEL | TYC 35 | 1 |
| 2 | 30.6807-104 | 1 | VIKO / COVER / DECKEL | TYC 35 | 1 |
| 3 | 30.6807-105 | 0 | VIKO / COVER / DECKEL | TYC 35 | 1 |
| 4 | 30.6807-203 | 0 | PIST / PISTON / KOLBEN | TYC 35 | 1 |
| 5 | 30.TL307-101 | 0 | VALEC POMOCNY / AUXILIARY CYLINDER / HILFSZYLINDER | TR 40/30 | 1 |
| 6 | 30.TL307-102 | 0 | PISTNICE / PISTON ROD / KOLBENSTANGE | d 16 | 1 |
| 7 | 90.001.25.017 | 0 | SROUB IMBUS / ALLEN HEAD BOLT / IMBUSSCHRAUBE | M6X16 | 1 |
| 8 | 92.002.102 | 0 | SROUBENI / BOLTING / VERSCHRAUBUNG | S-GEV-8LLR | 2 |
| 9 | 95.800.015 | 0 | SEGR HRIDEL. / OUTSIDE SAFETY RING / SICHERUNGSRING AUSSEN | POJISTNY KROUZEK 40 | 1 |
| 10 | 95.801.026 | 0 | SEGR DIRA / INSIDE SAFETY RING / SICHERUNGSRING INNEN | POJISTNY KROUZEK 34 | 2 |
| 11 | 96.001.008 | 0 | O-KROUZEK STATIC / STATIC O RING / O-RING STATISCH | 26x2 NBR 70SH | 2 |
| 12 | 96.002.006 | 0 | KROUZEK O DYNAMICKY / DYNAMIC O RING / O-RING DYNAMISCH | 12x2 NBR 70SH | 1 |
| 13 | 96.041.001 | 0 | TESNENI / SEALING / DICHTUNG | 16x24x4 UN | 1 |
| 14 | 96.060.001 | 0 | KROUZEK STIRACI / SCRAPER RING / ABSTREIFRING | 16x22 NBR 70 | 1 |
| 15 | 96.082.001 | 0 | KROUZEK TESNICI / SEAL RING / DICHTUNGSRING | 10/14 | 2 |
| 16 | 96.900.007 | 0 | TESNENI KOMBINOVANE / COMBINATION SEALING / KOMBIDICHTUNG | PW4100300-Z20 | 1 |

Cislo Sestavy/Number of assembly/Nummer der Baugruppe; Verze (Ver.)/Version/Version; Nazev sestavy/Assembly title/Name der Baugruppe; Pozice (Poz.)/Position/Position; Objednaci cislo/Purchase order number/Bestellnummer; Nazev polozky/Volume title/Name der Position; Rozmer/Stock size/Abmessung

## 7.53. Ovladací panel / Control panel / Bedienpult

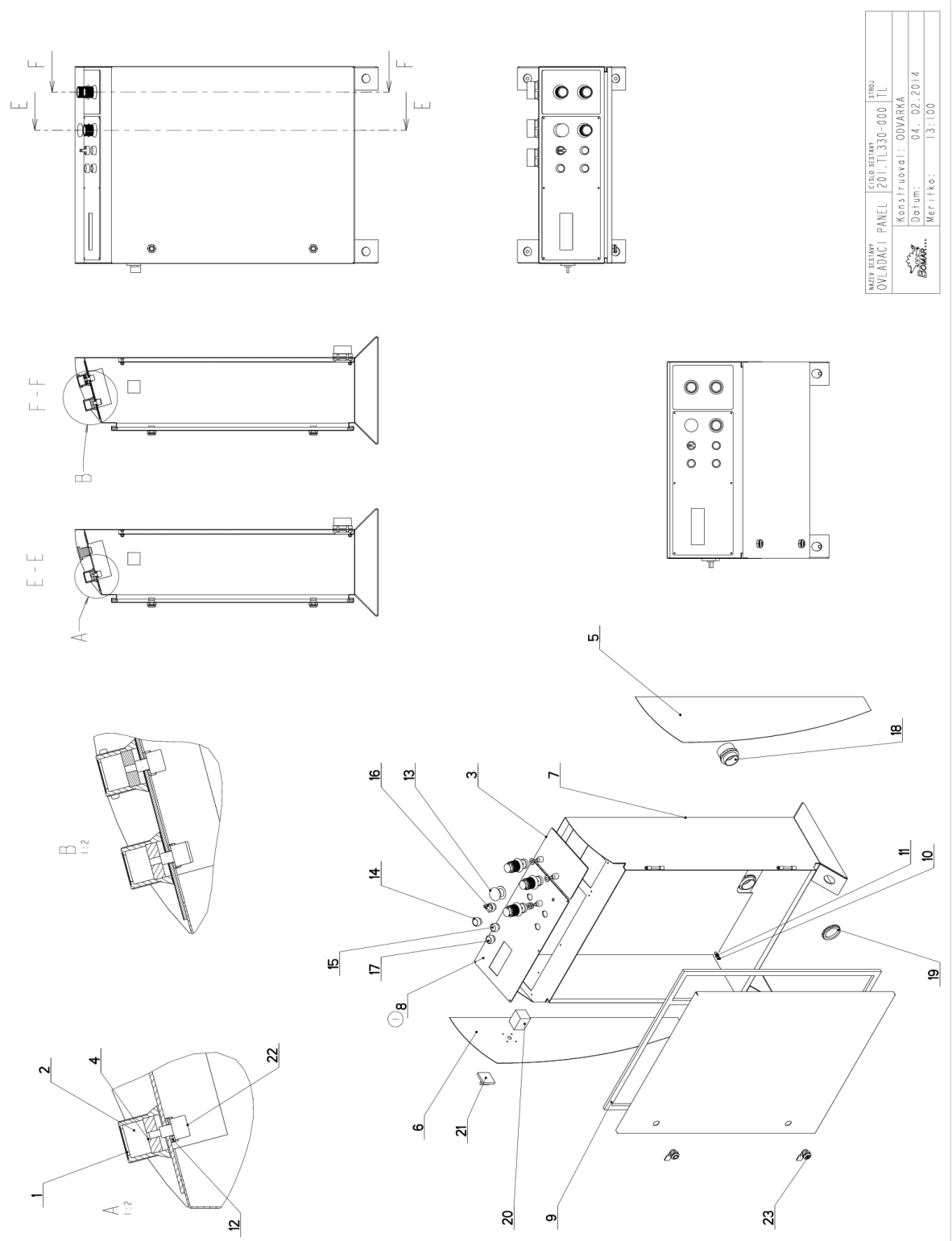

## 7.54. Kusovník / Piece list / Stückliste - Ovladací panel / Control panel / Bedienpult

| Cislo Sestavy | Ver. | Nazev sestavy |
|---|---|---|
| 201.TL330-000 | 1 | OVLADACI PANEL/CONTROL PANEL/BEDIENPULT |

| Poz. | Objednaci cislo | Ver. | Nazev polozky | Rozmer | Ks |
|---|---|---|---|---|---|
| 1 | 30.6130-012 | 0 | VIKO / COVER / DECKEL | P 0.5x 30x30 | 3 |
| 2 | 31.6130-008 | 0 | HLAVICE / HEAD / KOPF | | 3 |
| 3 | 251.558 | 0 | PANEL / PANEL / PANEL | | 1 |
| 4 | 30.R230-010 | 0 | MEZIKUS / INTERMEDIATE PIECE / PASSSTÜCK | d 32 | 3 |
| 5 | 30.R230-204 | 0 | PLECH / PLATE / BLECH | P 1x220 | 1 |
| 6 | 30.R230-206 | 1 | PLECH / PLATE / BLECH | P 1x220 | 1 |
| 7 | 30.TL330-001 | 0 | SKRIN / BOX / KASTEN | | 1 |
| 8 | 31.R230-207 (1) | 0 | PANEL ELEKTRO / ELECTRO PANEL / PANEL | P 3x205 | 1 |
| 9 | 61.352.001 | 0 | TESNENI / SEALING / DICHTUNG | TESNENI 19x10 | 1 |
| 10 | 90.100.55.004 | 0 | MATICE / NUT / MUTTER | MATICE _ M6 | 4 |
| 11 | 90.150.50.004 | 0 | PODLOZKA / WASHER / UNTERLEGSCHEIBE | PODLOZKA 6,4 | 4 |
| 12 | 90.150.50.006 | 0 | PODLOZKA / WASHER / UNTERLEGSCHEIBE | PODLOZKA 10,5 | 4 |
| 13 | 91.060.030 | 0 | HLAVICE TOTAL STOP / TOTAL STOP HEAD / TASTE TOTAL STOP | | 1 |
| 14 | 91.060.031 | 0 | HLAVICE / HEAD / KOPF | | 1 |
| 15 | 91.060.035 | 0 | HLAVICE / HEAD / KOPF | | 1 |
| 16 | 91.060.051 | 0 | PREPINAC / SWITCH / UMSCHALTER | | 1 |
| 17 | 91.060.053 | 0 | HLAVICE / HEAD / KOPF | | 1 |
| 18 | 91.071.022 | 0 | VYVODKA / BUSHING / TÜLLE | | 3 |
| 19 | 91.072.016 | 0 | MATICE / NUT / MUTTER | | 3 |
| 20 | 91.170.003 | 0 | SPINAC VACKOVY / CAM SWITCH / SCHALTER | LE2-12-1763 | 1 |
| 21 | 91.180.001 | 0 | DESKA SPINACE / ELECTRIC BOARD / PLATINE | | 1 |
| 22 | 91.283.015 | 0 | POTENCIOMETR / POTENTIOMETER / POTENTIOMETER | TP 195 4K7/N 20A | 3 |
| 23 | 99.104.002 | 0 | ZAMEK / LOCK / SCHLOSS | ZAMEK CINSKY | 2 |

1.ZRUS.SOUCASTI 30.R230-207 A 31.R330-003 A NAHR.31.R230-207. 007/ZM021 4.2.2014 SLEZACKOVA

Cislo Sestavy/Number of assembly/Nummer der Baugruppe; Verze (Ver.)/Version/Version; Nazev sestavy/Assembly title/Name der Baugruppe; Pozice (Poz.)/Position/Position; Objednaci cislo/Purchase order number/Bestellnummer; Nazev polozky/Volume title/Name der Position; Rozmer/Stock size/Abmessung