Series Workline

Workline 610.450 DGH

Operating instructions

Before transporting and using the machine,
please read the instructions thoroughly!

Seriové číslo / Serien Nummer / Serial Number

_____

Service and information

Your BOMAR dealer:

Direct BOMAR contact:

BOMAR spol. s r.o.	telefon:	+420 – 533 426 100
Těžební 1236/1	fax:	+420 – 533 426 109
62700 Brno	e-mail:	info@bomar.cz
Czech Republic, EU	www:	http://www.bomar.cz

We are available:

Mondays to Fridays	7^{00} – 16^{00}

Version:

1.33 / Aug. 2024

rev. 1

BOMAR, spol. s r.o. © – Subject to modifications and amendments.

EC/EU Declaration of Conformity

[1, 2] We:

BOMAR, spol. s r.o.
Těžební 1236/1
627 00 Brno, Czech Republic
Id. No: 48908827
declare herewith

that the following designated device based on its conception and construction as well as the design launched by us meets the relevant basic safety requirements of the decrees of the government.This statement applies exclusively to the machine device in conditions in which it was brought to the market. It does not apply to parts subsequently added by the end user or to modifications performed subsequently by the end user. In the event of any device modification not approved by us this declaration shall lose its validity

Name:	**Band Saw**
Type :	**Workline 610.450 DGH**
Serial number:	011-1000
Manufacturer	**BOMAR, spol. s r.o., Těžební 1236/1, 627 00 Brno**
Product data	
Determination:	for cross dividing and cutting of rolled and towed bars and profiles made of steel, stainless steel, non-ferrous metals and plastics
Description:	Stand, table, cutting unit with the arm, saw band and drive, hand clamping device, cooling system, machine control
	Pneumatic *NO* ☒ YES ☐ Hydraulic *NO* ☐ *YES* ☒ Control system *NO* ☒ YES ☐
Technical data:	Cutting rate 20-120 m.min-1
	Cutting angle -60° to 60°
	Characteristic cutting range 610 x 450 mm

Documentation:
Technical documentation for this machine device was elaborated in compliance with Government regulation no. 176/2008, Annex 7, part A.

The device meets relevant requirements of the given directives: **2006/42/ES**
2014/30/EU

The applied harmonized standards, National standards and technical specifications:

ČSN EN ISO 12100:2011 + Opr.1:2020 + Opr.2 :2021	ČSN EN ISO 16093:2018	ČSN EN ISO 13857:2021
ČSN EN ISO 4413:2011		ČSN EN 60204 -1 ed.3:2019
ČSN EN 55011 ed.4:2017 + A1: 2017+ A11:2020 + A2:2020	ČSN EN 61000-6-2 ed.4:2019	ČSN EN IEC 61000-6-4 ed.3:2019

The product is safe on condition of the common and determined usage.

The conformity judging was performed according to §12, par. 3, let. a), of the Law no. 22/1997 Coll. as amended.

BOMAR, spol. s r.o.
Těžební 1236/1, 627 00 Brno
Czech Republic
IČO: 48908827
DIČ: CZ48908827

Brno, 19.08.2022

Point of issue, datum

Alfred Pichlmann, Managing Director

Name and function of the responsible subject, signature

1) Name, address and identification number of the subject issuing the conformity declaration (producer of importer)
2) Person authorized to complete the technical documentation

!	If the equipment is installed without safety equipment offered by BOMAR, spol. s ro or its agents and used by the customer (or buyer) then EC declaration loses validity. EC Declaration of conformity is valid only if customer (buyer) installed the BOMAR safety equipment with the machine or with some other with equivalent safety device in accordance with current applicable regulations and standards. All machine elements and components that were built into the device by BOMAR, spol. s ro have been declared "identical" to a safety device, as offered by BOMAR, spol. s ro or its agents.

Content

1. SAFETY NOTES 9

1.1. Machine determination 11
1.2. Protective suit and personal safety 11
1.3. Safety notes for machine operator 12
1.4. Safety notes for the servicing and repairs 13
1.4.1. Safety notes for the servicing and repairs on hydraulic unit 13
1.5. Safety instructions for laser radiation sources 14
1.6. Safety machine accessories 14
1.6.1. Emergency Stop Switch 15
1.6.2. Arm covers 15
1.6.3. Saw band stretching and rupture inspection 15
1.6.4. Band saw cover 16
1.6.5. Brush cover 16
1.7. Safety notes for the cooling 16
1.7.1. Instructions for first help 16
1.8. Umístění štítku stroje / Maschinenschild position / Position of machine label 17
1.9. Umístění bezpečnostních značek / Verteilung der Sicherheitszeichen / Position of safety symbols 18

2. MACHINE DOCUMENTATION 19

2.1. Technická data /Technische Daten /Technical data 21
2.2. Rozměrové schéma /Aufstellzeichnung /Installation diagram 22
2.3. Popis /Beschreibung / Description 23
2.4. Transportation and stocking 24
2.4.1. Conditions for transportation and stocking 24
2.4.2. Transport and stocking preparations 24
2.4.3. Transport and stocking 24
2.4.4. Transportní schéma / Transport schema / Transport scheme 25
2.5. Activation 26
2.5.1. Machine working conditions 26
2.6. Band saw unpacking and assembling 26
2.6.1. Machine installing and levelling 26
2.6.2. Machine disposal after lifetime 27
2.6.3. First run of the power pack 27
2.6.4. Filling the reservoir with hydraulic oil 27
2.7. Kotevní plan / Verankerungsplan / Grounding plan 28
2.8. Electrical connection 29
2.8.1. Check the direction of the saw band 30
2.8.2. Check machine connection into electrical network 30
2.9. Filling of the cooling systém 30
2.10. Check machine function 30
2.11. Saw band 31
Refit the saw band cover only after you have installed and tightened the saw band 31
2.11.1. Saw band size 31
2.11.2. Selection of the saw band tooth systém 31
2.11.3. Saw band running-in 31
2.11.4. Tables for teeth selection 32

3. MACHINE CONTROL 33

3.1. Starting the band saw 35
3.2. Control panel 36
3.3. Machine control 38
3.3.1. Setting the machine state after completion of the cut 38
3.3.2. Cycle breaking 40
3.4. Band saw adjusting 41
3.4.1. Angular cut setting 41
3.4.2. Adjusting band guides 41
3.4.3. Cutting speed adjusting 42
3.4.4. Adjustment of pressure to the cut 42
3.4.5. Speed adjustment of the arm lowering 42
3.4.6. Saw frame lower stop position 43
3.4.7. Brush adjustment 43
3.4.8. Setting of a cooling method 44
3.4.9. Handling agent selection 44
3.4.10. Insertion 44
3.4.11. Bundle material cutting 45

4. MACHINE SERVICE 47

4.1. Saw band dismantling 49

4.2. Saw band instalation....50
4.3. Saw band stretching and inspection....51
4.3.1. Mechanical indicator of belt tightening....51
4.3.2. Setting the cutting pressure control....52
4.3.3. Hydraulic indicator of belt tightening (optional accessory)....53
4.4. Saw band run adjustment on stretching wheel....54
4.4.1. Saw band run inspection....54
4.4.2. Saw band setting....54
4.5. Saw frame lower stop position adjustment....55
4.6. Limit switch of the saw frame lower position adjustment....55
4.6.1. Check setting....55
4.6.2. Limit switch setting....55
4.7. Cooling agents and chips disposal....56
4.7.1. Coolant device inspection....56
4.7.2. Chips disposal....56
4.8. Hydraulic, Greases and oils....57
4.8.1. Gearbox oils....57
4.8.2. Lubricant greases....58
4.8.3. Lubrication....58
4.8.4. Hydraulic oils....58
4.8.5. Hydraulic unit service....59
4.9. Machine cleaning....60
4.10. Worn pieces replacement....60
4.10.1. Hard metal guides replacement....60
4.10.2. Round brush replacement....61
4.10.3. Saw band guiding rollers replacement....61
4.11. Stretching wheel replacement....63
4.11.1. Driving wheel replacement....65
4.11.2. Cooling pump replacement....66

5. ZÁVADY / TROUBLESHOOTING....68

5.1. Mechanical problems....70
5.2. Electric and hydraulic problems....72
5.3. Hydraulic problems....73

6. SCHÉMATA / SCHEMAS / SCHEMATICS....76

6.1. Elektrické schema / Elektroschema / Wiring diagrams....78
6.1.1. 3x400V+PE, 50 Hz....78
3x230V+PE, 50/60 Hz....101
3x230V+PE, 50/60 Hz....123
6.2. Hydraulické schéma / Hydraulikschema / Hydraulic diagram....146

7. VÝKRESY SESTAV PRO OBJEDNÁNÍ NÁHRADNÍCH DÍLŮ 150

7.1. WORKLINE 610.450 DGH....151
7.2. Kusovník / Piece list / Stückliste - WORKLINE 610.450 DGH....152
7.3. Ovladací panel / Control panel / Bedienpult....153
7.4. Kusovník / Piece list / Stückliste - Ovladací panel / Control panel / Bedienpult....154
7.5. Ovladací panel / Control panel / Bedienpult....155
7.6. Kusovník / Piece list / Stückliste - Ovladací panel / Control panel / Bedienpult....156
7.7. Podstavec / Base / Untersatz....157
7.8. Kusovník / Piece list / Stückliste - Podstavec / Base / Untersatz....158
7.9. Vana/ tank/ Wanne....159
7.10. Konzola otočná / Turnable consol / Drehkonsole....160
7.11. Kusovník / Piece list / Stückliste - Konzola otočná / Turnable consol / Drehkonsole....161
161
7.12. Svěrák / Vice /Schraubstock....162
7.13. Kusovník / Piece list / Stückliste - Svěrák / Vice /Schraubstock....163
7.14. Svěrák / vice / Schraubstock....164
7.15. Kusovník / Piece list / Stückliste - Svěrák / vice / Schraubstock....165
7.16. Válec svěráku / Vice cylinder / Schraubstockzylinder....166
7.17. Kusovník / Piece list / Stückliste - Válec svěráku / Vice cylinder / Schraubstockzylinder167
7.18. Rameno / Saw arm / Sägerahmen....168
7.19. Kusovník / Piece list / Stückliste - Rameno / Saw arm / Sägerahmen....169
7.20. Rameno / Saw arm / Sägerahmen....170
7.21. Kusovník / Piece list / Stückliste - Rameno / Saw arm / Sägerahmen....171
7.22. Kartáč / Brush / Bürste....172
7.23. Kusovník / Piece list / Stückliste - Kartáč / Brush / Bürste....173
7.24. Kryt / Cover / Abdeckung....174
7.25. Převodovka / Transmission / Getriebe....176
7.26. Napínání / Tensioning / Spannung....177
7.27. Kusovník / Piece list / Stückliste - Napínání / Tensioning / Spannung....178
7.28. Vedení pásu / Belt guide / Sägebandführung....179
7.29. Kusovník / Piece list / Stückliste - Vedení pásu / Belt guide / Sägebandführung....180
7.30. Kostka vodící / Lead cube / Führungsklotz....181

7.31. Kusovník / Piece list / Stückliste - Kostka vodící / Lead cube / Führungsklotz....182
7.32. Kostka vodící / Lead cube / Führungsklotz....183
7.33. Kusovník / Piece list / Stückliste - Kostka vodící / Lead cube / Führungsklotz....184
7.34. Válec zvedací / Lifting cylinder / Hebezylinder....185
7.35. Kusovník / Piece list / Stückliste - Válec zvedací / Lifting cylinder / Hebezylinder....186
7.36. Podstavec svěráku / Vice base / Schraubstockuntersatz....187
7.37. Kusovník / Piece list / Stückliste - Podstavec svěráku / Vice base / Schraubstockuntersatz....188
7.38. Brzda / Brake / Bremse....190
7.39. Odměřování / Measuring / Gehrungsmessung....191
7.40. Doraz / Stop piece / Anschlag....192
7.41. Volitelné vybavení....193
7.41.1. Laser / Laser / Laser....193
7.41.2. Upínání horní / Top clamping / Spannvorrochtung oben....194
7.41.3. Kusovník / Piece list / Stückliste Upínání horní / Top clamping / Spannvorrochtung oben....195
7.41.4. Odměřování / Measuring / Gehrungsmessung....196

1. Safety notes

The operating instructions must be read by the person, who keeps in touch with the machine before transportation, installation, using, servicing, reparation, stocking or removal!

The operating instructions include relevant information. The operator must familiarise himself with the install and operation, safety notes and machine servicing, because reliability and service life must be reached. The operating instructions must avoid risks, which are linked to work on the machine.

The machine operator must be familiar with the installation, operation and maintenance of machines and also with the safety instructions. Before transporting and using of the machine, please read the instructions thoroughly!

Attention!
The operating instructions must be available at the machine! Keep the operating instructions in good condition!

1.1. Machine determination

The band saw **Workline 610.450 DGH** is determined for cutting and shortening of rolled bars and drawn bars and profiles from steels, stainless steels, non-ferrous metals and plastics **with cutting angle** from -60° to 60°.

Combustible materials are excluded for cutting! Any other usage and operation outside this range are unauthorized and the manufacturer/supplier does not accept any responsibility for any damages resulting from such misuse. **The operator has full responsibility!**

Attention!
Consider the safety signs on the machine. Do not remove or damage them!

The machine is equipped with safety and protective guarding for operator and machine protection. Nevertheless, this safety and protective guarding cannot prevent injury. Service personnel must read this chapter and comprehend it, before he starts to work on the machine. **Always keep instructions about work safety!** Service personnel must take into account other aspects of the risk, which refer to the ambient conditions and the material.

1.2. Protective suit and personal safety

Wear tight fitting overalls! Loose fitting clothes may be caught with machine parts and cause serious injury.

Attention!
Gloves you can use only at working material replacement (saw band)! The machine and accessories must be inactive!
If the machine is running, you must not wear gloves! It is dangerous, because some parts of the machine can catch gloves!

Wear protective gloves! Material cuts and saw band have sharp edges and may cause serious injuries.

Wear protective shoes with non-skid soles! The unsuitable shoes may cause balance loss and following injury. Falling work pieces may cause serious injuries too.

Wear protective goggles! Chips and cooling liquid may damage your eyes.

Always wear ear protections! Most of the machines emit up to 80 dB and may damage your hearing.

Do not wear jewellery and always tie back long hair! Moving machine parts can catch jewellery or loose hair and may cause serious injuries.

Operate the machine only when you are fit enough to work. Illnesses or injuries diminish concentration.

Avoid machine work, which may compromise the safety of you and your colleagues!

1.3. Safety notes for machine operator

Keep instructions and orders about work safety!
Read the operating instructions, before you start to work on the machine! Keep the operating instructions in good condition!

Only one person can operate machine. Machine operator is responsible for presence of other persons by the machine.

Attention!
Machine can be operated by person older than 18 years!
Machine can be operated only person physically and mentally fit for this activity

Close covers before the machine starting and check, if the covers are not damaged. Damaged covers must be repaired or changed. Do not start the machine, if the cover is removed! Check, if the electric cables are not damaged.

- Do not hold the material for clamping to the vice and for cutting!

Attention!
Do not connect the machine to electricity if the covers are removed. Do not touch the electrical equipment.

- Do not operate with the buttons and the switches on the control panel, when you have gloves!
- For machine starting take care, that there is nobody in the working area of the machine (it means in the working area of the vice, the saw band, the saw arm etc.).
- In no circumstances touch the rotating elements.
- Work on the machine only when the machine is in good condition!
- Check at least once in a shift, if the machine is not damaged. If the machine is damaged, you must bring the machine in order and you must inform your superior!
- Keep your working area clean! Ensure sufficient lighting in the working area.
- Take off the spilt water or the oil from the floor and dry it. Do not touch the cooling liquid with bare hands! Do not set the nozzle of the cooling liquid, when the machine is started on
- Do not remove the chips from the working area of the machine, when the machine is started on!
- Do not use the compressed air for the machine cleaning or for the chips removing!
- Use the protective instruments for chips removal!

1.4. Safety notes for the servicing and repairs

Switch off the main switch and lock it, before you start service work! Otherwise, there is possibility of hazardous machine starting.

Only qualified person can do the servicing and repairs. For parts changing, use only parts, which are identical with the originals. Otherwise, there is possibility of health hazard. Use only recommended type of the hydraulic oils and oils and lubricants!

Attention!
Only a qualified professional can carry out the servicing and repairs of the electric equipment! Take special care during the work with electrical equipment. High voltage shock can have fatal consequences! Always keep notes about work safety! Otherwise, there is possibility of heavy injury!

Do not remove or do not lock the limit switches or safety equipments! Any use of the saw, accessories or machine parts other than that intended by the BOMAR, spol. s r.o. company is not permitted. The guarantee on this product will be afterward lost and BOMAR, spol. s r.o. takes no responsibility for caused damages.

1.4.1. Safety notes for the servicing and repairs on hydraulic unit

Compliance with the the principles of cleanliness is basic requirement for trouble-free operation of hydraulic equipment. Hydraulic components are products made with high accuracy, and any contamination leads to a reduction lifetime or even malfunction. The consequences are very difficult to remove and expensive.

Always use clean tools. Parts and fasteners, which are part of a hydraulic circuit, never put away the dirty surface. The best cleaning agent is crepe paper, because the fibers of the cleaning cloths can also cause malfunction.

Protective cap from the threaded chamber remove just before the assembly of the unit.

Hoses and pipes before mounting flush with gasoline or other cleaning agent and blow compressed air.

All fittings must be properly tightened. However, do not raw power.

1.5. Safety instructions for laser radiation sources

Laser radiation sources may be used on the machine.

Warning signs and information about the corresponding laser class are placed near each laser source.

It is forbidden to look into the laser beams!

Depending on the design and optional equipment of the saw, laser radiation sources can be located in particular:

- on the saw feeder
- before the main vice of the band saw
- on a safety fence (laser barrier)
- on the section line projection device

Commonly used laser safety classes:

1 (laser barriers)

1M (laser barriers)

3R (Laser-Liner)

Attention!
It is necessary for correct functionality of a laser to regularly check the patency of the laser ray on the sensor and to clean the laser from impurities (clean rag + spirit) after easch shift. Be careful during the cleaning in order the laser was not been schratched and broken!.

1.6. Safety machine accessories

Enhanced risk!
Do not come into or intervene in the cutting area. Otherwise, there is possibility of heavy injury.

The machine is equipped with safety accessories. It protects the operator from injuries and the machine before damage. The safety accessories are blocking accessories, emergency switches and covers. Check once in a week the function of the safety accessories. If the safety accessories are functionless, you must stop work and repair or change the safety accessories.

1.6.1. Emergency Stop Switch

Emergency Stop Switch is used for emergency switching – off the machine in case defect or health hazard. By pressing **Emergency Stop Switch** will immediately stop all dangerous machine movements.

If any damages or fault appears, immediately press Emergency Stop Switch!

It is possible to release the pressed button by twisting of the upper part of the button.

The **Emergency Stop Switch** is placed at the control panel of the machine.

1.6.2. Arm covers

If the cover is opened during operation, the limit switch is opened and the band saw is stopped. The band saw is not possible to start in set mode.

The band saw is stated to the operation, when the covers is closed! Limit switche on saw arm control if cowers are open or not.

1.6.3. Saw band stretching and rupture inspection

This device checks the saw band stretching and causes immediate machine shut – down in the event the band ruptures.

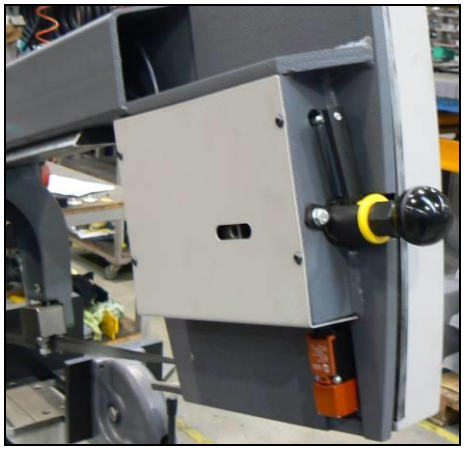

The device contains limit switch. Check the stretching carefully and periodically – eventually adjust.

1.6.4. Band saw cover

It covers the visible area of the saw band from left guiding cube to the frame.

Never switch on the saw band driver if this cover is not mounted!

1.6.5. Brush cover

It covers the brush for saw blade.

Never switch on the saw band driver if this cover is not mounted!

Attention!

- ***When handling cooling agents always wear hazardous fluid-proof gloves!***
- ***Wear protective goggles!***
- ***Cooling liquid can get in contact with your eyes and may cause permanent severe injuries***

1.7. Safety notes for the cooling

1.7.1. Instructions for first help

1. Pull off and safely remove polluted, soaked clothing.
2. For breathing, go out in the fresh air or look for first aid treatment.
3. Wash with water or use crèmes for contact with the skin.
4. Flush with water for eyes and look for first aid treatment.
5. For swallowing, drink a lot of water and induce vomiting. Look for medical help.

1.8. Umístění štítku stroje / Maschinenschild position / Position of machine label

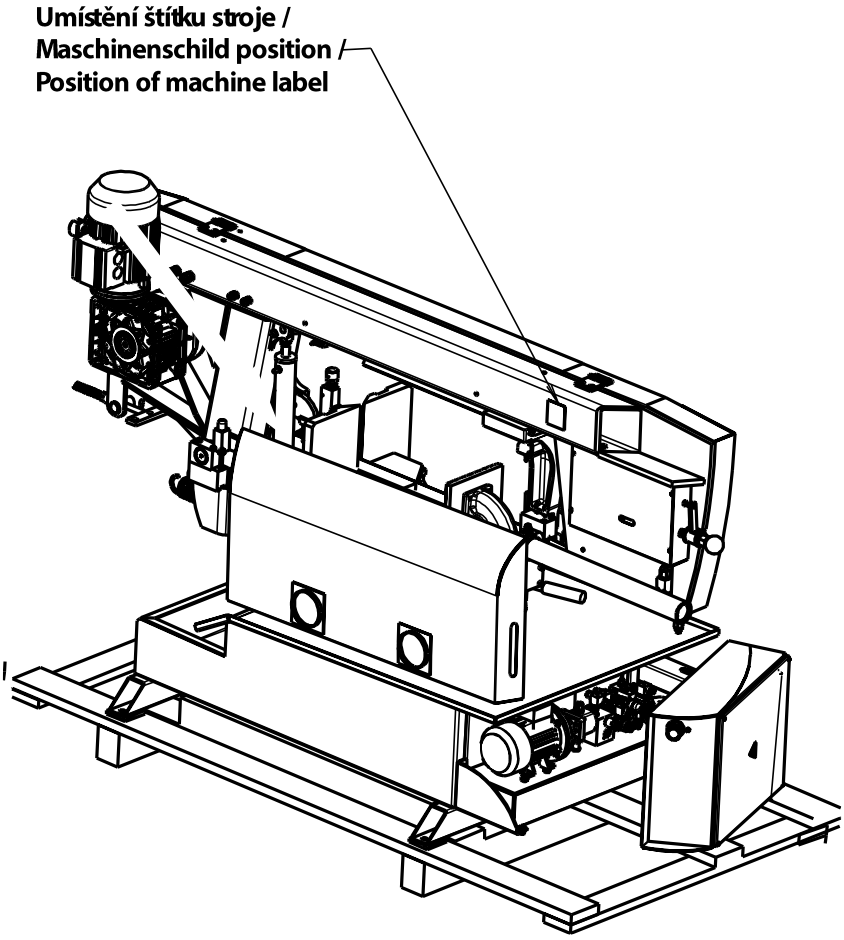

1.9. Umístění bezpečnostních značek / Verteilung der Sicherheitszeichen / Position of safety symbols

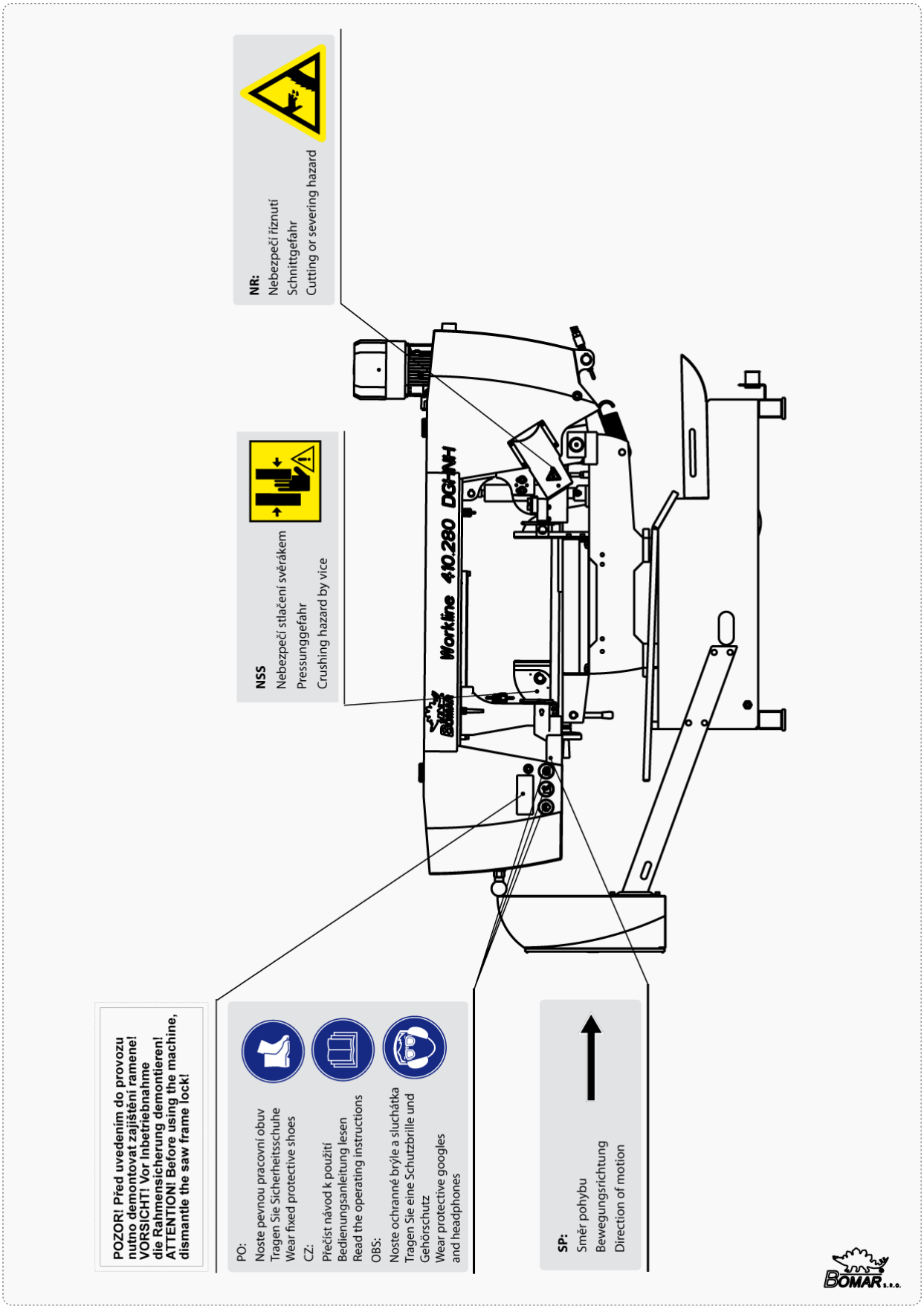

2. Machine documentation

2.1. Technická data /Technische Daten /Technical data

Hmotnost stroje / Maschinengewicht / Machine weight:	
• Hmotnost / Gewicht / Weight	800 kg
Rozměry stroje / Maschinengröße / Machine size :	
• Délka / Länge / Lenght	2770 mm
• Šířka / Breite / Width	1100 mm
• Výška / Höhe / Height	1480 mm
Elektrické vybavení / Elektrische Ausrüstung / Electical equipment:	
• Napájení / Versorgungsspannun / Supply voltage	~3 x 400/230 V, 50/60 Hz, TN-C-S
• Příkon / Gesamptschlusswert / Total Input	3,6 KW
• Max.jištění / Max. Vorschaltsicherung / Max. Fuse	16 A (3x400V) / 25 A (3x230V)
• Krytí / Schutzart / Protection	IP 54
Akustický tlak / Schalldruckpegel / Acoustic pressure:	
• Workline 610.450 DGH	L_{Aeqv}=76,3 dB
Pohon / Atrieb / Drive:	
• Typ / Typ / Type	BN100LA4
• Napájení / Versorgungsspannun / Supply voltage	~3 x 400V, 50Hz
• Výkon / Leistung / Output	3 kW
• Jmenovité otáčky / Motornenndrehzahl / Nominal speed	1440 min^{-1}
Hydraulické zařízení / Hydraulikeinrichtung / Hydraulic equipment:	
• Typ / Typ / Type	PPM-AC0,37-PG1/2,5-TM16-CB03-FR
Chladící zařízení / Kühlmiteleinrichtung / Cooling equipment:	
• Typ / Typ / Type	3-COA4-12 HP1
• Obsah nádrže / Volumen vom Kühlmittel / Capacity	40 l
Rozměr pásu / Sägebanddimension / Band size:	
5200×34×1,1 mm	
Řezná rychlost / Schnittgeschwindigkeit / Cutting speed:	
20–120 m/min.	
Řezné rozsahy / Schnittbereiche / Cutting size:	

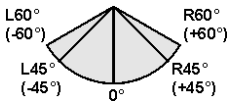

	○	▭	□
0°	Ø450 mm	610×450 mm	450×450 mm
45° L	Ø450 mm	450×250 mm	370×370 mm
45° R	Ø450 mm	450×400 mm	450×450 mm
60° R	Ø300 mm	300×290 mm	300×300 mm
60° L	Ø300 mm	300×290 mm	300×300 mm

Upozornění:

Pokud je na stroji instalována jednotka detekce materiálu, je maximální výška řezaného materiálu o 10 mm menší.

Hladina akustického tlaku:

Ekvivalentní hladina akustického tlaku A (hluku) je v místě obsluhy L_{Aeqv}= 76,3 dB. Uvedené hodnoty jsou hladiny emise a nemusí představovat bezpečné pracovní hladiny. Faktory, které ovlivňují skutečnou hladinu expozice pracovníků, jsou vlastnosti pracovní místnosti, zpracovávaný materiál a použité pilové pásy, které můžou expozici významně ovlivnit.

2.2. Rozměrové schéma /Aufstellzeichnung /Installation diagram

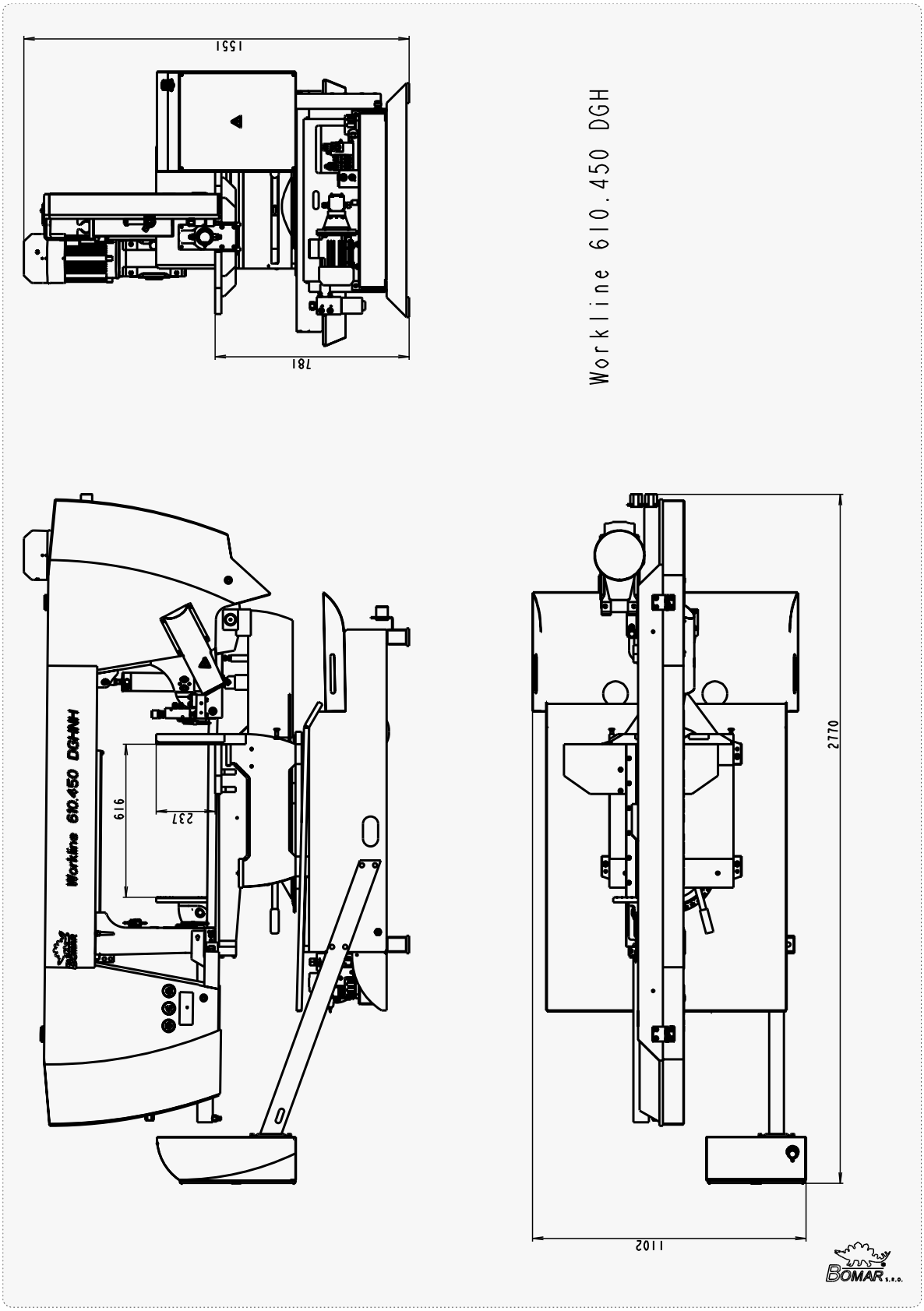

2.3. Popis /Beschreibung / Description

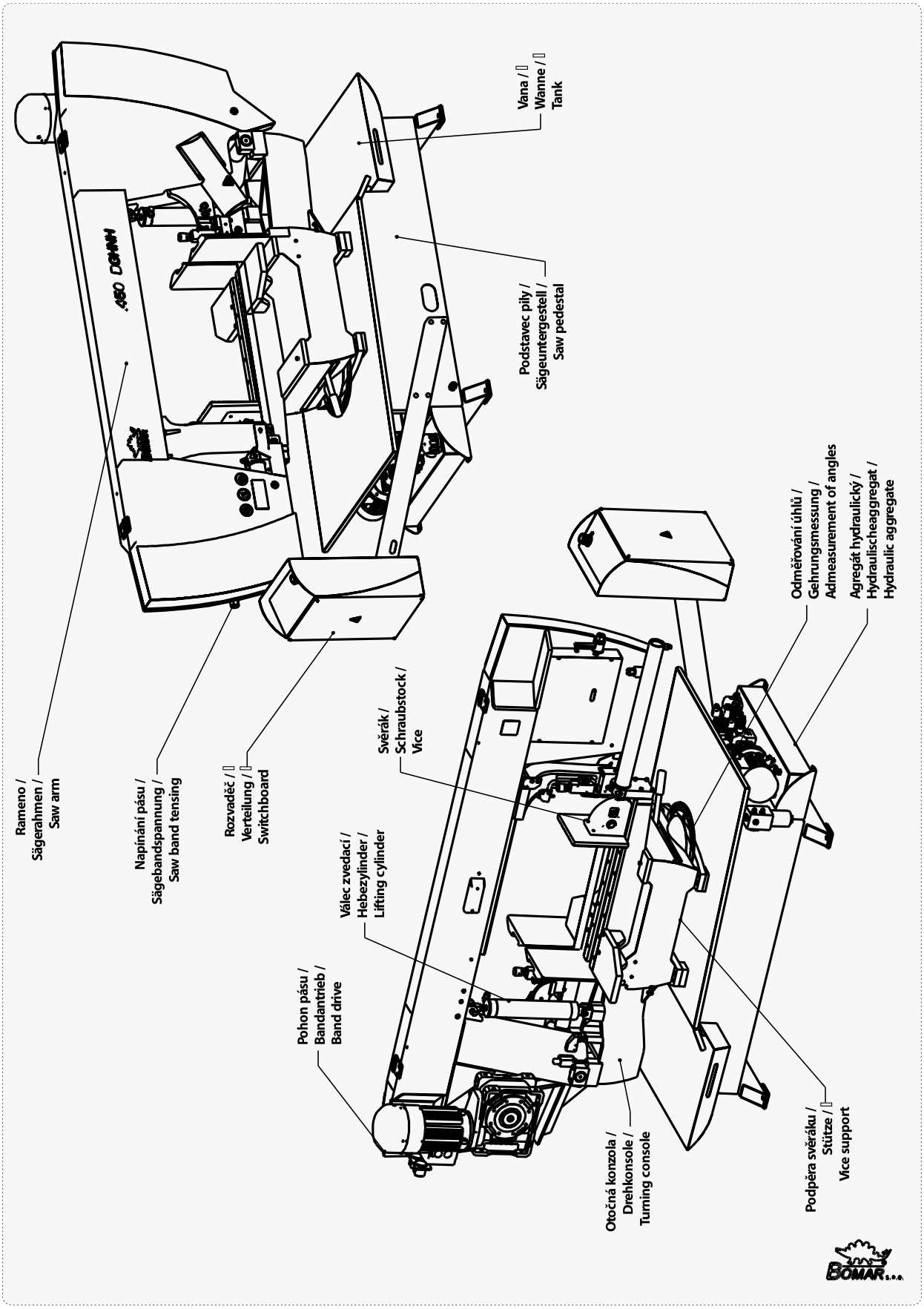

2.4. Transportation and stocking

2.4.1. Conditions for transportation and stocking

Keep recommendations for the manufacturers for transportation and stocking! If the recommendations are not kept, damage can occur to the machine.

- Don't use a forklift truck for handling the machine, if you do not have license for it!
- Don't move under suspended loads! Fault in lifting device may cause serious injury.
- Keep a safe distance from the machine during the transport.
- Temperature of the air from *-25°C to 55°C*, for a *short term* (max. 24 hours) temperature of the air until *70°C*
- Do not expose the machine to radiation (for example microwave radiation, ultraviolet radiation, laser radiation, x-ray radiation). Radiation can cause problems with the machine function and deteriorating condition of the isolation.
- Take measures, to prevent damage by dampness, by vibrations and by shakes.

2.4.2. Transport and stocking preparations

Close the vice and thoroughly oil all blank surfaces.

Lower the saw frame to the lowest position.

Make sure to empty the machine of all traces of the cooling agent.

Fasten all loose parts securely to the machine.

Pack and wrap the control desk securely to avoid damage during transport.

Fix the stickers stating the minimum approximate machine weight to at least five well visible places.

2.4.3. Transport and stocking

The machine must be secured during transportation. Screw on the palette to the floor of the van or the trailer. Be careful that the machine is not damaged during transportation. Store the machine only under conditions mentioned in the manual, to avoid damage of the machine.

It is forbidden to handle the machine any other way, than it is written in this operating instructions, the machine can be damaged.

2.4.4. Transportní schéma / Transport schema / Transport scheme

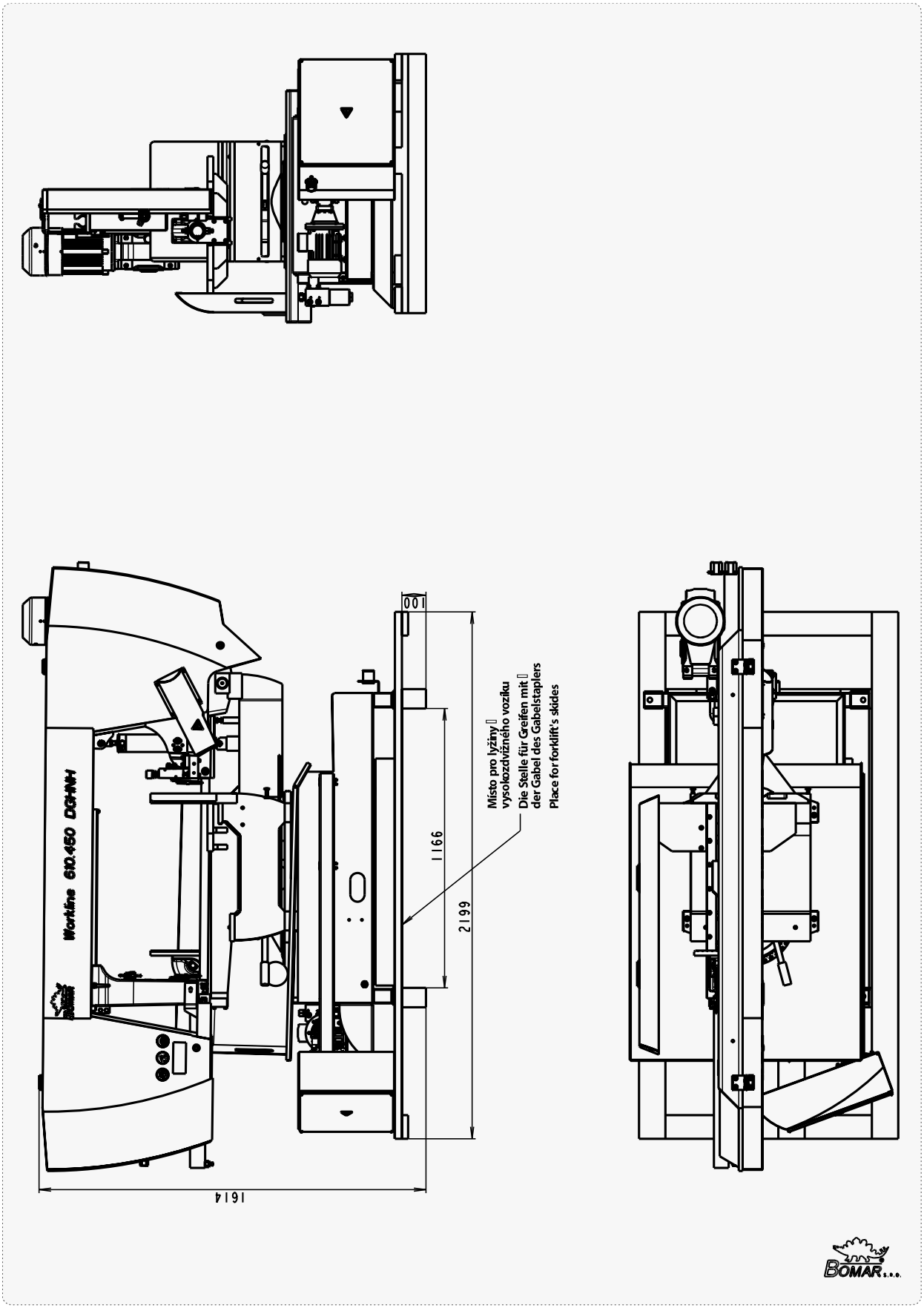

2.5. Activation

2.5.1. Machine working conditions

Keep the conditions of the manufacturer for machine operating! If recommendations are not kept, damage can occur to the machine.

The manufacturer warrants the correct function of the machine for these conditions:

- At temperature air from ***10°C to 40°C***, the temperature average during 24 hours must ***not exceed over 35°C***.
- At relative dampness of the air in the extend from 30% to 95% (not concentrate). Altitude lower than 1000 metres.

Attention!
If the ambient temperature drops below 15 ˚ C is required before operating the machine to have switch on hydraulic unit around 10 minutes and then made several motion few times (for example, in manual mode) by all hydraulic cylinders. The reason is to heat hydraulic oil to the operating temperature for proper function of the pressure switches (and choke).

- Do not expose the machine to the radiation (for example microwave radiation, ultra-violet radiation, laser radiation, x-ray radiation). Radiation can cause problems with the machine function and deteriorating condition of the isolation.

2.6. Band saw unpacking and assembling

Attention!
Switch off the main switch and lock it, before you start assembly! Otherwise, there is possibility of hazardous machine starting.

Remove the packing from the machine and unpack all parts.

If the hydraulic unit is outside the machine (the machine only connected hoses and cables), it needs to be placed and mounted on a solid basis (floors, etc.). The mounting holes are used on the bottom (bases) of the tank.

2.6.1. Machine installing and levelling

Check the floor supporting capacity before machine installing. If the floor capacity does not agree with requirements, you must prepare the necessary base for the machine.

Minimal requirement:

machine weight – Workline 610.450 DGH – 800 kg

+ weight of accessories

+ maximum weight of material

- The machine must be levelled at the horizontal position. All feet of the machine must touch with the floor after levelling
- The machine must be levelled by means of the calibrated spirit level. Spirit level is put on the vice area. Set the roller conveyors according to the spirit level.
- For machine levelling, take care that there is sufficient available space for operation, repair work, servicing of the machine and handling the material..
- The machine including appended parts and accessories must be visible from the place of operation.

2.6.2. Machine disposal after lifetime

Blown out all service fluids (cooling liquid, hydraulic oil) into designated reservoir. Dismantle machine into separate parts and dispose them in accordance with valid directives.

2.6.3. First run of the power pack

Before the first run check:

- The direction of the Pump, while run the power pack for max. 2seconds.
- The cooling fan of the motor has to rotate in the same direction as the arrow on the top of the motor cowling indicates.
- In case of wrong rotational direction, the electrical phase in the connection box is to be changed. This check is required after every disconnection from the power source
- Wiring matches with electrical and hydraulic diagrams
- the electric motors (pump and cooler) are properly connected and have the prescribed rotation
- the hydraulic accumulator with nitrogen gas to the specified value
- aux. elements work right (thermometer, level gauge, heater)

First run (Attention – working pressure on securing valve is set by producer in accoring the hydraulic diagram):

- In the short intervals activate an electric pump
- check for leaks and noise
- Bleed the hydraulic circuit
- if possible, test the circuit function with minimum load
- test the electrical equipment
- during operation monitor measuring equipment, noise, height and temperature of oil in the tank
- During this time a careful bleeding off for the whole hydraulic system is necessary. In case there is no bleeder port, the power pack will bleed itself after a while via the air breather on the tank or the return line filter.
- After multiple start-up.

2.6.4. Filling the reservoir with hydraulic oil

Oil regulations and recommendations of the manufacturer in the technical documentation (appendix) are to be carefully observed. For standard power packs we recommend the oiltype OH-HM32 (DIN 51524) of all known oil manufacturers.

Power packs have to be filled up with clean, pre-filtered oil! The purity of the hydraulic fluid must correspond to the class 10 NAS 1638 (reachable with filter ß =75)!

Filling from container, such as barrels, backets, etc. is not recommended or permitted!

The maximum oil level will be shown on the upper marking at the dipstick or the sight level glass. Overfilling has to be prevent. The maximum filling rate of 15 l/min shouldn´t be exceed.

Druh oleje	Kinematická viskozita v mm¿/s v závislosti na teplotě					Bod tuhnutí
	0°C	20°C	40°C	60°C	80°C	°C
OH-HM 32	220	100	32	15	7	-40
OH-HV 32	180	67	32	17	11	-40

2.7. Kotevní plan / Verankerungsplan / Grounding plan

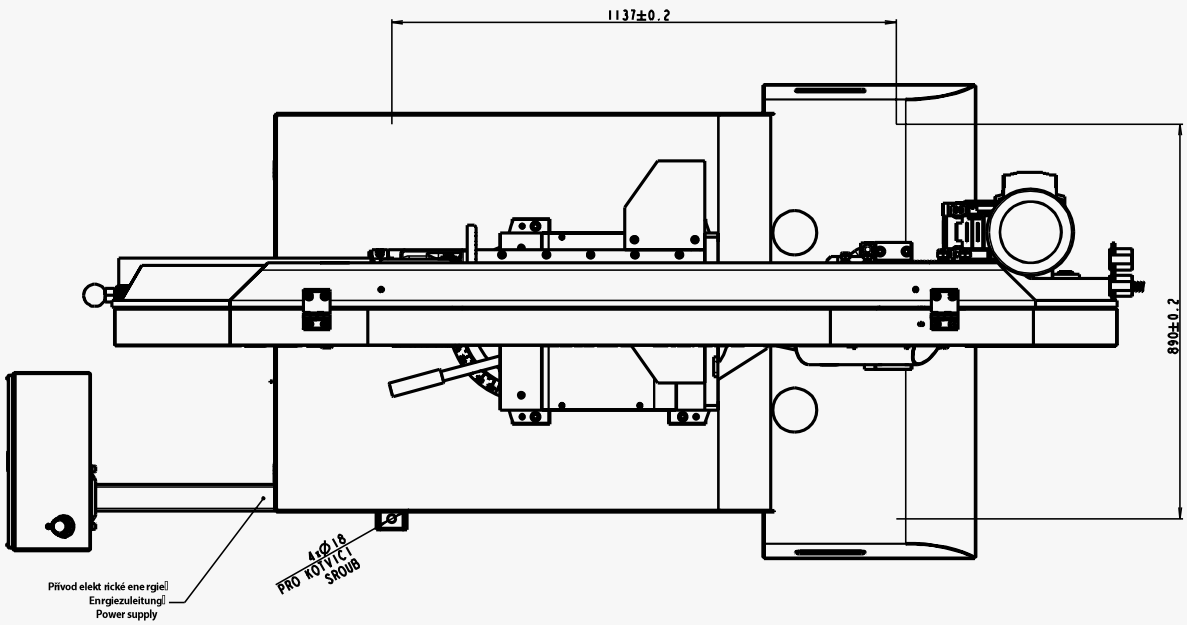

Kotvící materiál / Verankerungsmaterial / Grouding material

- 4× Hmoždina / Dübel / Plug – ø12 mm
- Vrtáno do hloubky / In die Tiefe gebohrt / Drilled to – 95 mm
- Šrouby / Schraube / Screws – 4×M16×135

Šrouby podložit deskami o min. rozměrech P10×100-100
- Die Schrauben mit Platten mit Minimaldimensionen P10×100-100 unterlegen
  Screew must be bottomed with plates (min. dimensions P10×100-100)

Požadavky na rovinnost podlahy / Anforderungen an die Bodenebenheit / Requirements for floor flatness

± 10 mm / 1 m

2.8. Electrical connection

Attention!
Only a qualified professional must carry out the servicing and repairs of the electric equipment! Take special care during work with electrical equipment. High voltage shock can have fatal consequences! Always keep notes about work safety.

Electrical parameters of the machine:

- Service voltage: ~ 3×400/230 V, 50/60 Hz, TN-C-S
- Total input / Max. fuse: 3,6 kW
- Max. fuse: 16 A (3x400V) / 25 A (3x230V)

Note:
The values of the crosscut of the conductor and the rated current are in the norms.

Before connecting switch off the main switch of the power supply circuit for the machine and ensure dry place when doing connecting works!

Service voltage must agree with the line voltage! Crosscut of the supply line must respond with rated current for max. machine load.

Note:
The socket with the fork can be used only at the machines with the rated current less than 16 A and total input less than 3 kW.

Attention!
In this case the extra main switch becomes primary and the main switch on the machine has only secondary function.

In case the machine is connected with a direct connection, an extra main switch must be added which can be locked in zero position.

2.8.1. Check the direction of the saw band

After the machine has been successfully connected, briefly switch on the machine and put the driving engine of the band in the running position. The direction must be in accordance with the arrow direction on the saw band cover. In case the direction of the saw band does not match, two phases at the terminal strip must be switched.

2.8.2. Check machine connection into electrical network

Attention!
When you connect the machine to the electrical network observe correct connection of all phases!
ENGINE IN IN HYDRAULIC AGGREGATE CANNOT BE OPERATED WITH REVERSE TURNING MORE THEN 10 SECONDS!!!

2.9. Filling of the cooling systém

Prepare the mixture of the water and the cooling liquid. Keep the concentration specified by manufacturer. Shift away the cover from the drainage hole. Fill the mixture of the water and the cooling liquid to the tank of the cooling system. Area of the tank for the cooling liquid is discovered from the chapter *Technical data*.

Note:
If machine is equiped with microniser, fill microniser with prescribed cooling liquid. This made the Microniser ready for use.

Let the drainage hole opened and with the sieve during operation, because it secures the right work of the cooling system. Filling the tank with the cooling liquid, take care that the liquid does not drip out of the tank and the tank does not overflowed.

2.10. Check machine function

Check, if the machine or some parts of the machine were not damaged during transport.

Check, if covers are installed and functional. Check by means of the Tenzomat if the saw band is correctly stretched. If it is necessary, you can stretch the saw band according to chapter *Selection and replacement of the saw band*. Values of the saw band stretching are on the Tenzomat. Switch on the main switch and check the motors and systems (saw band drive, hydraulic pump, cooling pump, chips conveyor).

Open and close the main vice. Turn the saw frame of the band saw from one outer position to other outer position. Raise the saw frame to the top position and drop the saw frame to the lowest position.

Start the machine with the cooling pump and let it run without load until the cooling system will be filled with cooling liquid. As soon as the cooling liquid starts to escape from the nozzles of the cooling system, the cooling system is ready for the operation. Carry one cycle of cutting without material. Check, if the machine runs with no irregularities. If all machine functions are right, the machine is ready for operation..

2.11. Saw band

Refit the saw band cover only after you have installed and tightened the saw band.

2.11.1. Saw band size

5200×34×1,1 mm

2.11.2. Selection of the saw band tooth systém

The manufacturers provide the saw bands with constant and variable tooth system. The important factor for selection of the tooth system is length of the cutting canal with respect to the size of the product

BOMAR recommended Variable tooth system for band saw.

1. *Constant tooth system* – the saw band has parallel tooth pitch all over length. This way is suitable for cutting of solid material.
2. *Variable tooth system* – tooth pitch is variable. Variable tooth system is used for profiled materials and bundle cutting. Variable tooth pitch lowers vibration of the saw band, increases service life of the saw band and quality of the cutting area.

In tables, there are advised type of the tooth system depending on sizes and form of the cutting material.

Footnotes:

Z_pZ – teeth number on one inch S – tooth with zero angle of the teeth K – tooth with positive angle of the teeth

Examples of the tooth system marking:

32 S – number „32" means 32 teeth on one inch (that means constant tooth system), letter „S" marks teeth with zero angle of the tooth.

4–6 K – number „4–6" means 4 till 6 teeth on one inch
(that means variable tooth system); letter „K" marks teeth with positive angle of the teeth.

2.11.3. Saw band running-in

Running-in: Cut the material with the frame lowering reduced to 50% only. When vibrations occur increase or decrease the band speed.

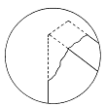

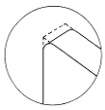

Note: Run regrinding saw bands too.

When cutting small pieces run the band until approximately 300 cm^2 of material has been cut. When cutting large pieces run the band for 15 minutes approximately. When the band has been run, increase the lowering-speed to normal speed. The running in of the saw band avoids micro-breaks on the cutting edges of new saw band ensuing from first excessive stress. This would decrease service life substantially. The optimal running in of the saw band produces ideal rounded cutting edges and therefore the conditions for an optimal service life.

2.11.4. Tables for teeth selection

SHAPED MATERIAL (D_P, S = mm)

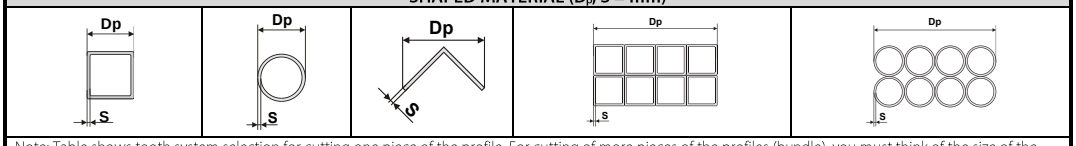

Note: Table shows tooth system selection for cutting one piece of the profile. For cutting of more pieces of the profiles (bundle), you must think of the size of the wall as double size of the wall of one profile (that means, size „S" equates to 2×S). In table, there are tooth systems constant and variable.

Size of the wall S [mm]	Tooth system (Z_pZ) Outer diameter of the profile D_P [mm]					
	20	40	60	80	100	120
2	32 S	24 S	18 S	18 S	14 S	14 S
3	24 S	18 S	14 S	14 S	10–14 S	10–14 S
4	24 S	14 S	10–14 S	10–14 S	8–12 S	8–12 S
5	18 S	10–14 S	10–14 S	8–12 S	6–10 S	6–10 S
6	18 S	10–14 S	8–12 S	8–12 S	6–10 S	6–10 S
8	14 S	8–12 S	6–10 S	6–10 S	5–8 S	5–8 S
10	-	6–10 S	6–10 S	5–8 S	5–8 S	5–8 S
12	-	6–10 S	5–8 S	5–8 S	4–6 K	4–6 K
15	-	5–8 S	5–8 S	4–6 K	4–6 K	4–6 K
20	-	-	4–6 K	4–6 K	4–6 K	3–4 K
30	-	-	-	3–4 K	3–4 K	3–4 K
50	-	-	-	-	-	3–4 K

Size of the wall S [mm]	Tooth system (Z_pZ) Outer diameter of the profile D_P [mm]					
	150	200	300	500	750	1000
2	10–14 S	10–14 S	8–12 S	6–10 S	5–8 S	5–8 S
3	8–12 S	8–12 S	6–10 S	5–8 S	4–6 K	4–6 K
4	6–10 S	6–10 S	5–8 S	4–6 K	4–6 K	4–6 K
5	6–10 S	5–8 S	4–6 K	4–6 K	4–6 K	3–4 K
6	5–8 S	5–8 S	4–6 K	4–6 K	3–4 K	3–4 K
8	5–8 S	4–6 K	4–6 K	3–4 K	3–4 K	3–4 K
10	4–6 K	4–6 K	4–6 K	3–4 K	3–4 K	2–3 K
12	4–6 K	4–6 K	3–4 K	3–4 K	2–3 K	2–3 K
15	4–6 K	3–4 K	3–4 K	2–3 K	2–3 K	2–3 K
20	3–4 K	3–4 K	2–3 K	2–3 K	2–3 K	2–3 K
30	3–4 K	2–3 K	2–3 K	2–3 K	1,4–2 K	1,4–2 K
50	2–3 K	2–3 K	2–3 K	1,4–2 K	1,4–2 K	1,4–2 K
75	-	2–3 K	1,4–2 K	1,4–2 K	1,4–2 K	0,75–1,25 K
100	-	-	1,4–2 K	0,75–1,25 K	0,75–1,25 K	0,75–1,25 K
150	-	-	-	0,75–1,25 K	0,75–1,25 K	0,75–1,25 K
200	-	-	-	0,75–1,25 K	0,75–1,25 K	0,75–1,25 K

SOLID MATERIAL (D = mm)

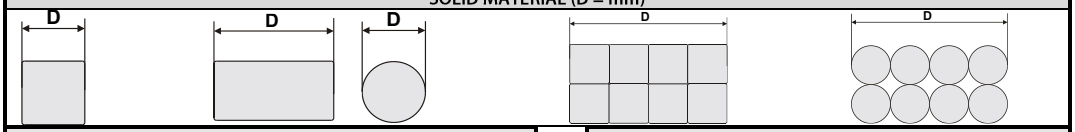

Constant tooth system	
length of the cut D	tooth system (Z_pZ)
to 3 mm	32
to 6 mm	24
to 10 mm	18
to 15 mm	14
15–30 mm	10
30–50 mm	8
50–80 mm	6
80–120 mm	4
120–200 mm	3
200–400 mm	2
300–800 mm	1,25
700–3000 mm	0,75

Variable tooth system	
length of the cut D	tooth system (Z_pZ)
to 30 mm	10 –14
20–50 mm	8–12
25–60 mm	6–10
35–80 mm	5–8
50–100 mm	4–6
70–120 mm	4–5
80–150 mm	3–4
120–350 mm	2–3
250–600 mm	1,4–2
500–3000 mm	0,75–1,25

3. Machine control

3.1. Starting the band saw

» 1. Switch on the main switch of the band saw. The main switch is situated on the switchboard.

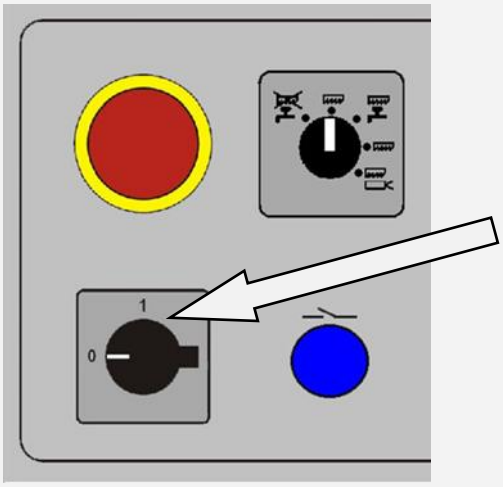

2. Switch the saw's safety (control) circuit on –button **No.11** at the control panel of the saw.

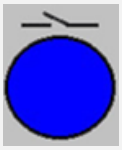

3.2. Control panel

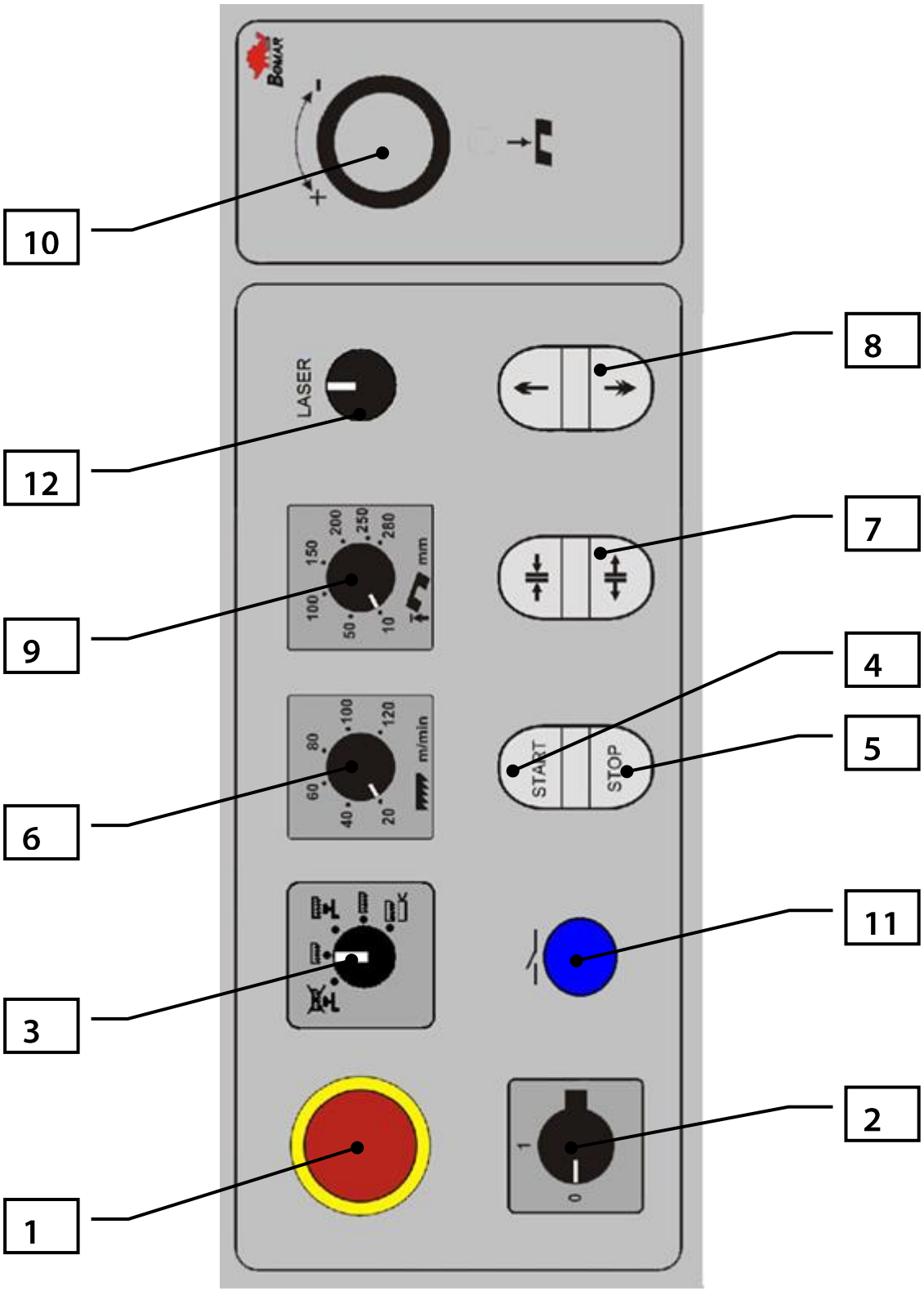

1	**Emergency Stop Switch** In emergency causes the machine must be immediately switched off.
2	**Machine Turn ON/OFF** Switch into position 1 to turn ON the machine or into position 0 to OFF.
3	**Cooling system selection** You can select from three possibilities: See chapter "Setting of a cooling method"
4	**START - Switch on the working cycle** Push of a button starts the cutting cycle Button STOP stops cutting cycle.
5	**STOP - Switch off the working cycle** Button STOP stops or brake cutting cycle.
6	**Frequency convertor** Turn to change the speed of the saw band.
7	**Open/Clamp vice** Pressing and holding button open or clamp full stroke vice.
8	**Lift/Lower the saw arm** Pressing and holding button lifts or drops saw arm by the lifting hydraulic cylinder. Lifting the saw arm using the button is not limited by setting on the switch from. 9. After a long shutdown the machine (about days) may temporarily occur that, you cannot lift the arm to the maximum upper position. This gradually improves during the machine operation – after a few strokes. As you move down saw arm, you can activate rapid lowering bypressing both buttons simultaneously.
9	**Arm height setting** According to the scale on the control panel, you can limit the maximum frame top position at the working (semi-automatic cycle). Numbers on the scale indicate the distance between saw blade and vice board near the fixed vice jaw. Limiting the height of the arm can reduce the time of the cutting cycle.
10	**Governing valve** Adjust the speed of the arm sinking to the cut by governing valve. **ATTENTION!** **If you keep closing the throttle valve too tightly, the valve seat may wear off which causes its leakage. Therefore, close the valve always gently.**
11	**Safety circuit** Button switch on the control circuit of control system
12	**Laserliner – optional accessory** Switcher of the laser beam

3.3. Machine control

1. Set the cutting angle.
2. Lift the arm. Bandsaw blade must be higher than is height of the workpiece.
3. Open the vice by button **7** –open vice and insert workpiece into vice. Clam vice by button **7** - clampvice .
4. Adjust the height of lifting the saw arm at working cycle (use swtch on pos. **9**) – preset value must be higher than is height of the material.

> ***Attention!***
> ***Do not move the saw frame to the material, when the saw band driving is not running! Do not move the saw frame to the material with accelerated motion! The saw band can be damaged!***

5. Press the **4** - START button starts the cycle. The arm will fall into the cut and the drive belt is running
6. After cutting the material, the arm lifted into its top position adjusted by a switch on the control panel on position **9**. Then vice release clamped material that can be removed
7. Now it is possible to insert new material and repeat the working cycle, button **4** – STARTand cyklus repeat

3.3.1. Setting the machine state after completion of the cut

The operator can choose:

- Arm position after the cut completion
- Vice position after the cut completion
- In which arm position the saw band movement is stopped.

Selection of required settings can be done by means of control buttons on the control desk when the machine is in the setting mode.

Procedure:

1. Switching the machine to the setting mode

a) Consecutively, push the buttons: STOP + RELEASE VICE + ARM UPWARD + ARM DOWNWARD and hold all the four buttons pushed at the same time for at least 10 seconds.

After about 10 seconds, the red indicator between the START and STOP buttons on the control desk starts blinking quickly.

The indicator is flashing for 1-2 s.

Flashing of the indicator means that the setting mode has been activated.

b) When the indicator starts blinking, release the buttons pushed; then you can perform some of the below described settings.

2. Setting the machine state

After the machine has been set to the setting mode, push the pertinent buttons shortly according to the tables below. Thus you can set the required options.

The fact that the given command has been accepted is always confirmed by a certain number of blinks of the red indicator located between the START and STOP buttons on the control desk.

As long as the setting menu is active, options can be selected without limitation – that is, you can choose various settings successively or change various options repeatedly.

After the down arm position after cut is preset and, at the same time, the option of the saw band drive switch-off is set to the upper arm position, the machine cannot execute both the orders simultaneously. If the operator programs this infeasible combination of options, the option for switching off the saw band drive will be ignored and the saw band drive will automatically be switched off in the down arm position.

- ***Setting the saw arm position after the cut completion:***

Selected arm position after cut completion	*Button to be pushed for the given option*	*Confirmation of command acceptance*
The arm runs to the upper position	arm upward	4 indicator blinks
The arm remains in the lower position	arm downward	3 indicator blinks

- ***Setting the vice position after the cut completion:***

Selected vice position after cut completion	*Button to be pushed for the given option*	*Confirmation of command acceptance*
The vice remains closed	close vice	2 indicator blinks
The vice opens.	open vice	1 indicator blink

- ***Selection of the arm position in which the saw band vice is stopped after the cut completion:***

According to the option programmed in this step by the operator, the saw band drive can stop in the lower or upper arm position after cut.

If the upper arm position after cut is preset, both options for switching off the saw band drive can be preset as necessary.

If the lower arm position after cut is preset and, at the same time, the option for the saw band drive switch-off is set to the upper arm position, the machine cannot execute both of these orders simultaneously. If the operator programs this infeasible combination of options, the option for switching off the saw band drive will be ignored and the saw band drive will automatically be switched off in the down arm position.

Switching between both possible options is done by repeated pushing of the START button on the control desk. Each push of the button cancels the previous option and sets the contrary one.

Selected arm position to switch off the saw band	*Button to be pushed for the given option*	*Confirmation of command acceptance*
Arm upward	START	5 indicator blinks
Arm downward	START	6 indicator blinks

3. **Ending the setting mode**

a) Pushing the STOP button, you exit the menu for setting service parameters – for confirmation, the red indicator on the desk will be blinking quickly for about 1s.

b) Then the saw is in the READY state and the control buttons on the control desk of the machine can further be used for standard control of the machine.

The default factory setting of the machine state after cut is always such that:

- the arm runs upward after the cut completion;
- the vice opens and releases the material after the cut completion;
- the band drive stops in the "Arm downward" position after the cut completion.

3.3.2. Cycle breaking

» • **STOP button**

Semi-automatic cycle is interrupted by pressing button **5 – STOP** of the cycle

The arm stops fall into cut and saw blade is stoped.

By pressing button ***4 – START of the working cycle***, you can start the cycle.

• **Emergency Stop Switch**

In case of the risk, press **Emergency Stop Switch.**

After pressing **Emergency Stop Switch**, saw band drive is immediately broken and the arm sinking is stopped.

• **Reactivation**

1. Turn **Emergency Stop Switch** according to the arrows (on the button).
2. Switch the saw's safety (control) circuit on –button **No.11** at the control panel of the saw.
3. Lift saw arm above cutted material and push START button.

3.4. Band saw adjusting

3.4.1. Angular cut setting

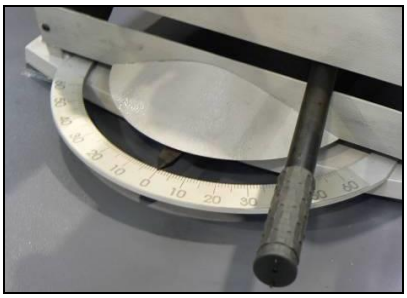

1. Release securing lever of the console, Swivel the frame to the desired angle by pulling the saw arm. Angle is shown on scale. Then re-tighten the lever.
2. According to the cutting angle is needed to move the vice. For cutting angle less than 0 ° move vice to the right, for cutting angle more than 0 ° move vice to the left.

angle < 0°	angle ≥ 0°
	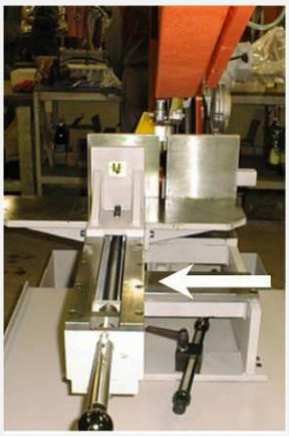

3.4.2. Adjusting band guides

If you want to achieve a smooth and precise cut, it is helpful to position the guide cube as close as possible to the material.

1. Release the stopping lever of the listel. Move the left part of the guide so that the left edge of the guide blocks is as close as possible cutted material.
2. Lower the frame to the lower position and check the position of the guide cube towards vice loading area. The guide cube must be a distance of at least 10 mm from the vice loading area.
3. Tighten the lever of the gib and check the guide cube setting once more for possible collision with binding table or vice jaw.

3.4.3. Cutting speed adjusting

Blade speed is possible adjusted continuously from 20 to 120 m / min.

Use the frequency convertor on control panel (pos. 6) to adjust requested speed of the saw band.

3.4.4. Adjustment of pressure to the cut

> ***Notice!***
> ***The guide cubes are equipped with valves, which must be open during operation***

The band saw ***Workline 610.450 DGH*** is equipped with cutting pressure regulation on the both guiding cubes.

Pressure adjusting is performed with regulating screw on guiding cube.

- ***Lower pressure to the cut*** – turn the screw clockwise.
- ***Higher pressure to the cut*** – turn the screw contra-clockwise.

Diagram for cutting pressure on ADFR (automatic downfeed regulation) ,
Hydraulic pressure recommended on the aggregate unit 6 Mpa

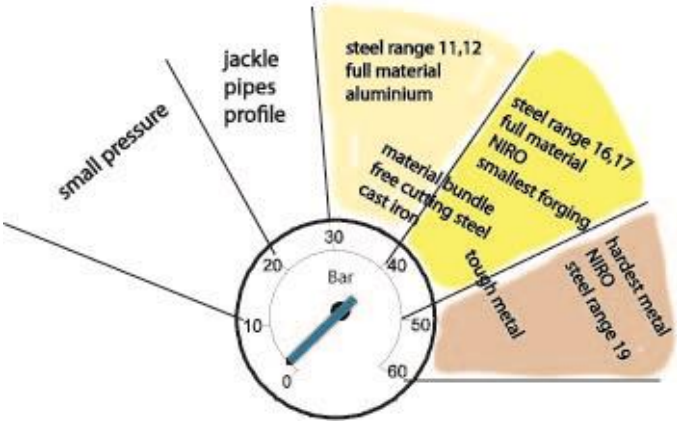

- The higher cutting pressure is set by turning clockwise.

3.4.5. Speed adjustment of the arm lowering

Speed of the arm lowering is adjusted by regulation valve on control panel – pos. **8**.

- Set the ***lower speed*** of the arm lowering to the cut by turning the switch ***clockwise***.

> ***Notice:***
> ***If you keep closing the throttle valve too tightly, the valve seat may wear off which causes its leakage. Therefore, close the valve always gently.***

- Set the ***higher speed*** of the arm lowering to the cut by turning the switch ***anti-clockwise***.

3.4.6. Saw frame lower stop position

The lower stop limits the lowest position of the saw frame. This stop point has to be checked at least once a month. If the lower stop point is incorrectly adjusted, the cutting table can be damaged or the material will not be cut completely.

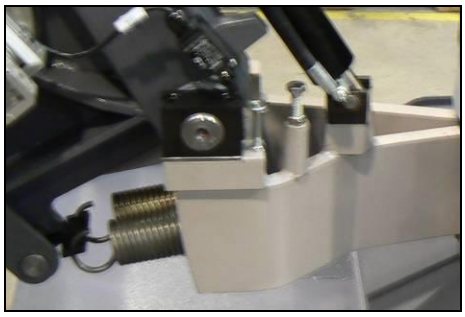

Setting the lower stop position is set using the screw in Console.

3.4.7. Brush adjustment

The brush for chip removal from the saw band influences cutting durability saw band lifetime and wheels lifetime, hard metal guides and finally the cut accuracy. Brush adjustment must be checked every shift.

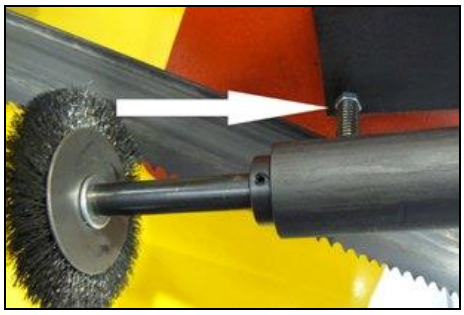

1. Release the fixative screw of the brush. It is possible to move with the brush.
2. Set the brush to the saw band according to the picture.

Attention!
The brush must not touch the bottom of the saw teeth!

3. Tighten the fixative screw.
4. In case, that the brush is not turned right (driving wheel slips on the driving wheels of the saw band), push by means of the screw (see arrow) driving wheel of the brush to the driving wheel of the saw band.

Attention!
The screw must not be tightened with heavy force, because driving wheel of the brush can be damaged or the lifetime of the bearings of the driving wheel of the band can be lowered!

3.4.8. Setting of a cooling method

Required cooling method can be selected using a switch no. 3 on control panel.

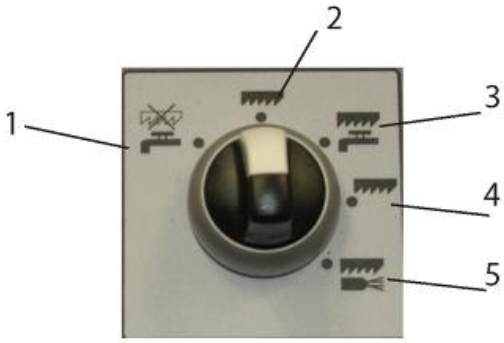

Liquid cooling

1. Coolant pump runs when the drive of the belt is switched off (rinse)
2. Saw band runs without cooling
3. Cooling starts while starting of the drive of the saw band .

Chlazení olejovou mlhou – Micronizer (volitelné vybavení)

4. Saw band runs without cooling
5. Cooling starts while starting of the drive of the saw band .
6. Material insertion

- Never walk under a suspended load!
- Never climb onto the gravity-roller conveyor!
- Do not hold the material for clamping material to the vice! The vice can cause injury!

3.4.9. Handling agent selection

- Use the strong handling agents to lift and transfer the material!
- Handle with the material only with the lift truck or use the suspension strands and the crane!
- Do not use the lift truck or crane in case that you do not have the license to handle with it!

3.4.10. Insertion

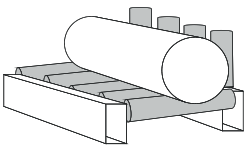

Insert material to the vice and ensure that the material cannot move in the vice or fall from the vice after the clamping. If you cut long pieces of the material (for example rod, tube), you must use the roller conveyors for material shifting to the band saw. Contact Bomar for more information about roller conveyors

Make sure the conveyor is long enough and the material cannot tip off the conveyor.

Be especially careful with round materials that it always stays on two vertical rollers and that it cannot fall off the conveyor!

3.4.11. Bundle material cutting

Attention:
Manualbundle clamping device is not standard equipment. Without this device is a not possible cut bundle.

If you want to cut the material in the bundle, there are suggestions for the positioning of bundles

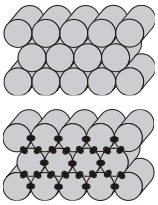

Round material bundle: Take care especially with round material that the bars are put according to the picture. If the bars are put differently, you may have problems with movement.

Always weld the material at the rear end of the bundle to secure it from moving.

Before welding always, switch the machine off at the main switch! The magnetic fields, which often occur during welding, may damage the controls!

Attention:
Not all material shapes are suitable for bundle cuts. Keep the recommendation of your supplier of the saw bands for material insertion to the bundle.

4. Machine service

4.1. Saw band dismantling

During the dismantling, take care that you do not damage the limit switch if the saw band stretching.

1. Lift the saw frame to the top position. Stop the saw frame in top position by control valve.

2. Dismantle yellow protective cover of the saw band. The cover is clamped with two screws.

3. Open the cover of the arm.
4. Turn by stretching star to the left side, release saw band stretching and pull saw band from blade wheels.

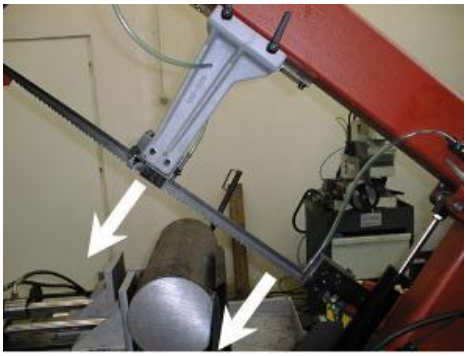

5. Pull up the saw band from the guiding cubes

4.2. Saw band instalation

During the installation, take care that you do not damage the limit switch if the saw band stretching!

1. Prior to installation, clean all track wheels, guide cubes and inner side of the arm thoroughly of all traces of chips and dirt. ***Keep in mind the teeth direction when installing the saw band.***

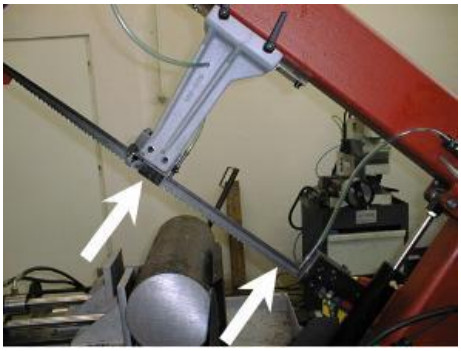

2. Insert new saw band in the guide cubes. Make sure the saw band runs between both guide rollers and it is pushed all the way to the top.

3. Put the saw band on both guide wheels. Make sure that the saw band ridge fits tightly to the wheel rim. Then push the saw band as far back as possible.
4. By turning the stretching star to the right, you will stretch the saw band slightly. Remove the plastic cover of the saw band teeth.
5. Close the cover of the arm.

6. Install the yellow protective cover of the band. The arrow on the cover must match the direction of the arrow on the band. If it does not, you must turn the band round.

4.3. Saw band stretching and inspection

Right saw band stretching is one of the most important criteria's, which influents accuracy and saw band service life. Stretch the saw bands according to the selected saw band and the band saw. Keep the recommendation of your manufacturer.

Pilový pás Sägeband Saw band	Napětí pilového pásu Sägebandspannung Blade tension	Napětí pilového pásu PSI (pro Tenzomat) Sägebandspannung PSI (für Tenzomat) Blade tension PSI (for Tenzomat)
20 x 0,9 mm	160 $N.mm^{-2}$	23 500
27 x 0,9 mm	180 $N.mm^{-2}$	26 500
34 x 1,1 mm	210 $N.mm^{-2}$	30 500
41 x 1,3 mm	240 $N.mm^{-2}$	35 000
54 x 1,3 mm	240 $N.mm^{-2}$	35 000
54 x 1,6 mm	280 $N.mm^{-2}$	40 600
67 x 1,6 mm	290 $N.mm^{-2}$	42 000
80 x 1,6 mm	300 $N.mm^{-2}$	43 500

4.3.1. Mechanical indicator of belt tightening

To facilitate tightening of the belt, a mechanical indicator is installed on the machine by default, enabling the belt to be tightened to the optimum value easily and quickly.

Mechanical indicator of belt tightening

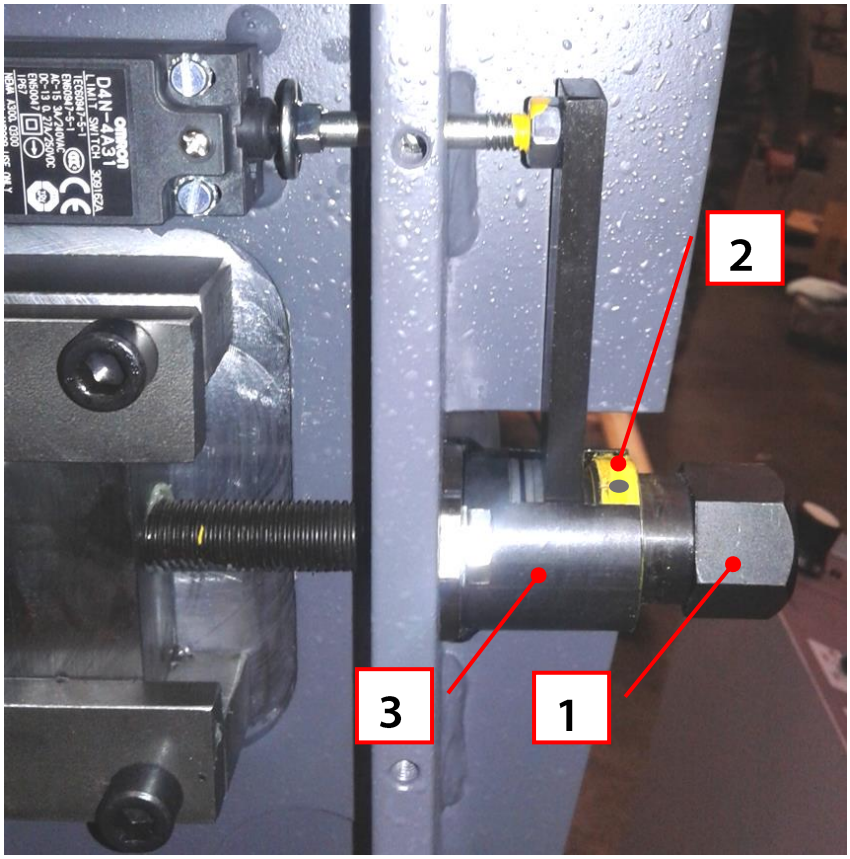

1	Tightening screw
2	Yellow ring – indicator of correct belt tightening
3	Bush

1. **After the belt replacement, the tightening screw (Pos. 1) must be tightened** so that the face of the yellow ring (Pos. 2) be aligned with the face of the bush (Pos.3)

The areas indicated in red in Fig. 1 must be aligned.

Fig.1

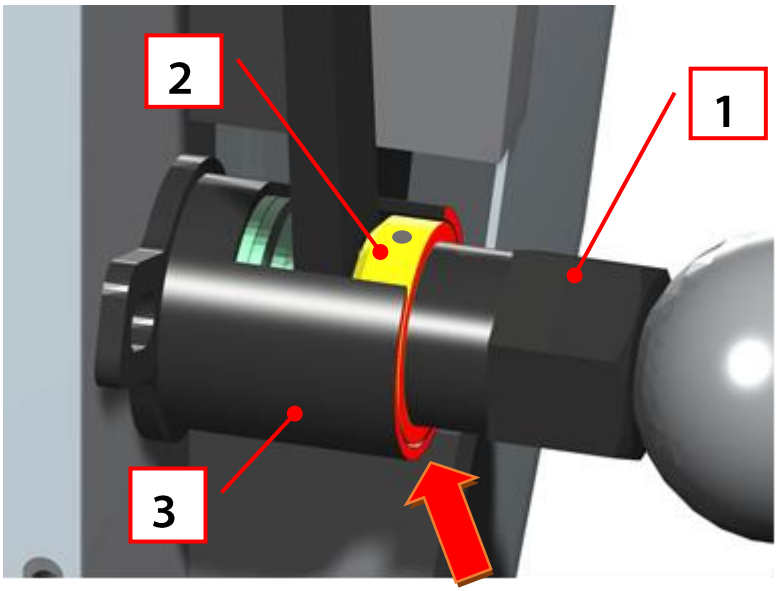

NOTE:

The belt length with deviations within normal tolerances has no influence on the method of the belt tightening indication!

If the belt length deviations fall within normal tolerances and the belt is tightened correctly, the face of the yellow ring (Pos. 2) is always aligned with the face of the bush (Pos. 3), regardless of the real dimension of the belt.

Belts with deviations outside the normal tolerances must not be mounted on the machine!

4.3.2. Setting the cutting pressure control

The band saw is equipped with automatic down-feed regulator on the right guiding cube. The band saw can be equipped with down-feed regulator on the left guiding cube for requirement of the customer.

Adjusting the down-feed regulator is performed with regulating wheel on the guiding cube. Screw on the wheel, the pressure is increased. Screw off the wheel, pressure is lowered.

Downfeed	Description
downfeed pressure is bigger	Screw on the wheel
downfeed pressure is smaller	Screw off the wheel
Picture	**Sequence**
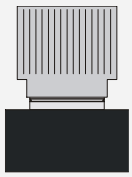	**One visible neck** Solid material over ∅200 mm.
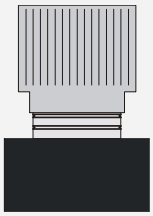	**Two visible necks** Solid material to ∅80 -∅200 mm.
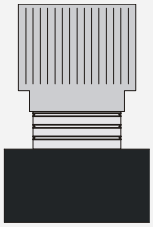	**Three visible necks** • Pipes and shapes material with surface from 10 – 15 mm. • I-shaped material from 200 – 280 mm. • Solid material to ∅80 mm.
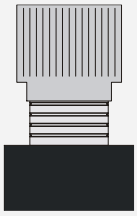	**Four visible necks** • Pipes and shapes material with surface to10 mm. • I-shaped material to 200 mm.

4.3.3. Hydraulic indicator of belt tightening (optional accessory)

If the machine is equipped with a hydraulic indicator of the belt tightening (optional accessory), the belt tightening value can be seen on the indicator gauge.

The optimum working tightening value of the belt is indicated with a green arrow.

4.4. Saw band run adjustment on stretching wheel

Saw band run on the stretching wheel must be regularly inspected. The inspection has to follow every saw band replacement.

4.4.1. Saw band run inspection

If the run is not correct, the following problems may occur:

- **The saw band falls from the wheels** – The saw band and protective cover can be damaged.
- **The saw band runs on the wheel rim** – The saw band and wheel rim can be damaged

1. Start and stop saw band drive.
2. Stop the main switch!
3. Open rear cover of the saw frame.

4. Check saw band placing on the wheels.

- If the distance of the rear part of the saw band from wheel rim is 1 – 3 mm, setting is right.
- If the distance is bigger than 3 mm, or the saw band runs on the wheel rim, saw band run must be set.

4.4.2. Saw band setting

The saw band run is set with screw in the stretching cube on the saw frame. Optimal distance has been determined at **1 – 3 mm**.

- Turn by screw to the right, the saw band approximates to the stretching wheel rim.
- Turn by screw to the left, the saw band departs from the stretching wheel rim.

Check saw band run again after setting.

4.5. Saw frame lower stop position adjustment

The lower stop limits the lowest position of the saw frame. This stop point has to be checked at least once a month. If the lower stop point is incorrectly adjusted, the cutting table can be damaged or the material will not be cut completely

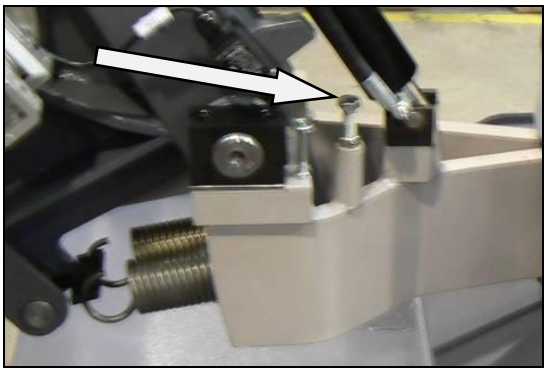

1. Lift the saw frame to the top position.
2. Release the nut of the screw and set it to the desired value.
3. Secure the screw with nut.
4. Set the limit switch of the saw frame lower position.

4.6. Limit switch of the saw frame lower position adjustment

If the lower stop of the saw frame was set, the limit switch must be set again.

4.6.1. Check setting

Lower the saw frame to the bottom position. If the saw frame is on the lower stop and the limit switch was responded, the limit switch adjustment is right. If the limit switch is not right, it must be set.

4.6.2. Limit switch setting

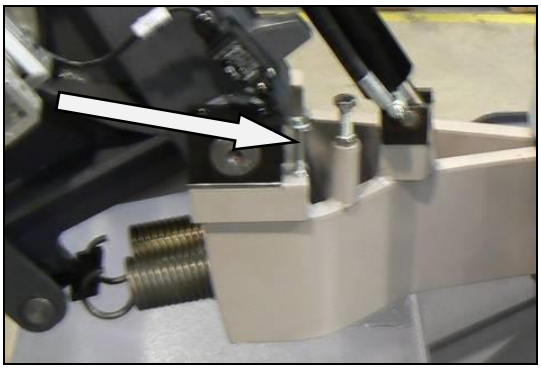

1. Release the nut of the stop screw of the switch and screw on the screw.
2. Lower the saw frame to the lower stop. Start the saw band drive.
3. Screw off the stop screw of the switch, until the saw band drive is not stopped.
4. Secure the screw with the nut and check limit switch adjustment again.

4.7. Cooling agents and chips disposal

The quality of the cooling agent will deteriorate due to:	If the solution is too weak:	If the solution is too strong:
• use of contaminated water • impurity • outside oil contamination (hydraulics, gears) • high operating temperatures • lack of air circulation • wrong concentration	• corrosion protection is diminished • lubrication decreases • microbial attack is more likely	• the cooling ability is decreased • foam behavior increases • emulsions stability deteriorates • sticky residue develops

4.7.1. Coolant device inspection

The state of the cooling agent has significant influence on the cutting quality and on the operational life of the machine. Lifetime of the cooling liquid is 1 year, after this time we recommend change the cooling liquid. This time is dependent on the degree of pollution cooling liquid (especially with oils) and on the other factors.

Check level of the cooling liquid and function of the pump periodically!

> ***Note:***
> ***If the state of the cooling liquid is not satisfactory, the cooling liquid must be changed.***

Check the state of the cooling agent according to the following table:

Testing	Interval	Method	Condition	Precaution
Liquid level	daily	visually	too low	after concentration check, refill with water or emulsion
Concentration	daily	refractometer densimeter	too high too low	refill water refill base emulsion
Smell	daily	by sense of smell	unpleasant smell	good ventilation, add biocides or renew coolant
Contamination	daily	by sense of smell	visible oil leaks, sludge fungi	surface cleaning, fix leaks, add biocides or fungicides, or coolant renewal after added system cleanser*
Corrosion-protection	when necessary	visually chip test Herbert-test	insufficient corrosion protection	test stability, if necessary – increase concentration or pH value
Stability	when necessary	refractometer	oiling	add concentrate, enquiries to supplier
Foam reaction	when necessary	shaking test	too much foam, foam disperses too slowly	avoid aeration, increase water hardness, ix with defoamer

* According to manufacturers' instructions

4.7.2. Chips disposal

Chips resulting from cutting operations must be disposed of in accordance with the relevant regulations.

- Let the chips drip excess fluid!.
- Fill a watertight container with the chips! Be careful that the container does not leak, because even after a long dripping time, they still contain coolant residue.
- *Place the container into the care of a disposal company equipped for the disposal of chips contaminated with cooling liquid.* In case the machine is equipped with micro-spray installation, the chips must also be handed over to a disposal company.

4.8. Hydraulic, Greases and oils

4.8.1. Gearbox oils

In gearboxes, oil is used for the whole lifetime of the gearbox. We recommend replacing of the filling oil in case of repair.

Attention:
When replacing, use oils recommended by BOMAR or oils, which has comparable parameters from the other manufacturers.
Do not forget, that mineral and synthetic oils must not be mixed!

Use oils with specification DIN 51517 in the gearboxes. Select the viscosity grade ISO VG according to the original oil fill.

Recommended oils and quantity according to the type of the band saw

Band saw	Gearbox oil	Capacity
Workline 610.450 DGH	Shell Tivela S 320	1,0 l
Swarf conveyor	Shell Tivela S 320	0,075 l

Comparative table of the gearbox oils

Manufacturer	Viscosity grade		
	ISO VG 100	ISO VG 220	ISO VG 320
BP	Energol GR-XP 100	Energol GR-XP 220	Energol GR-XP 320
Castrol	Alpha SP 100 Alpha MW 100	Alpha SP 220 Alpha MW 220	
Elf	Reductelf SP 100	Reductelf SP 220 Reductelf Synthese 220	Reductelf SP 320
Esso	Spartan EP 100	Spartan EP 220	Spartan EP 320
Mobil	Mobilgear 627	Mobilgear SHC 220 Mobilgear 630	Mobilgear 632
ÖMV		PG 220	
Paramo	PP 7	Paramo CLP 220	Paramo CLP 320
Shell	Shell Omala 100	Shell Omala 220 Shell Tivela S 220	Shell Omala 320 Shell Tivela S 320
Total	Carter EP 100	Carter EP 220	Carter EP 320

4.8.2. Lubricant greases

We recommend using lithium based saponified grease, class NGLI-2 for lubrication. Different greases are mixable, if their oil bases and consistence type are identical.

Comparative table of the lubricant greases:

Manufacturer	Type of the lubricant grease
BP	Energrease LS - EP
DEA	Paragon EP1
Esso	FETT EGL 3144
	Beacon EP 1
	Beacon EP 2
FINA	FINA LICAL M12
Klüber	Microlube GB0
	Staburags NBU8EP
	Isoflex Spezial
Optimol	Optimol Longtime PD 0, PD1, PD2
Shell Aseol AG	ASEOL Litea EP 806-077
Texaco	Multifak EP1

4.8.3. Lubrication

There are several placing on the machine, which are necessary to grease periodically. It secures the right function of the machine.

Lubrication place	Lubrication
	The guiding cubes leading – grease with oil from both sides once a week.

4.8.4. Hydraulic oils

Replace the hydraulic oil once in 2 years, because the oil can deteriorate its properties and cause problems the hydraulic equipment. If the hydraulic system is equipped with filter (2SF 56/48-0,063), replace the filter too.

Note:
When replacing, use oils recommended by BOMAR or oils, which has comparable parameters from the other manufacturers. Do not forget, that mineral and synthetic oils may not be mixed!

Use oils with specification DIN 51524-HLP, ISO 6743-4 and viscosity grade ISO VG 46 in hydraulic aggregates. Hydraulic oils quantity – see chapter **Hydraulic oil level check**.

Comparative table of the hydraulic oils

Výrobce	Typ oleje	Výrobce	Typ oleje
Agip	Oso 32	Ina	Hidraol 32 HD
Aral	Vitam GF 32	Klüber	Lamora HLP 32
Avia	Avilub RSL 32	Maďarsko	Hidrokomol P 32
Benzina	OH-HM 32	Mobil	Mobil DTE 25
BP	Energol HLP 32	ÖMV	HLP 32
Bulharsko	MX-M/32	Polsko	Hydrol 30
Castrol	Hyspin AWS 32	Rumunsko	H 32 EP
Čepro	Mogul HM 32	Rusko	IGP 30
DEA	Astron HLP 32	Shell	Tellus Oil 32
Elf	Elfolna 32	Sun	Sunvis 846 WR
Esso	Nuto H 32	Texaco	Rando HD B 32
Fam	HD 5040	Valvoline	Ultramax AW 32
Fina	Hydran 32		

4.8.5. Hydraulic unit service

After 50 hours working time, or the latest 3 month after the first run, the first service should be carried out. This includes:

- checking off all screws and connections, fixing points, tubes and hoses for leakage
- Cheb hydraulic oil level
- During time of duty the oil temperature shouldn´t exceed 60-70°C
- check function of signaling components (thermometer, level gauge, dirty filter indicator)
- Check the adjustment of working pressure

To realize a high reliability of the power pack, the manufacturer lays down following inspection intervals

Interval	daily	weekly	monthly	three monthly	six monthly	annually
Hydraulic fluid						
Level	-	•	-	-	-	-
Temperature	-	•	-	-	-	-
Condition	-	-	•	-	-	-
Change interval	-	-	-	-	-	•
Filter						
Change interval	-	-	-	-	-	-
Other checks						
External Leakages	•	-	-	-	-	-
Contamination	•	-	-	-	-	-
Damages	•	•	-	-	-	-
Noise-(level)	•	-	-	-	-	-
Gauges	-	-	•	-	-	-

4.9. Machine cleaning

Clean the machine from the cooling liquid and impurities after every shift stopping. Conserve the guiding surfaces, mainly.

- Clamping jaws guiding of the vice.
- The guiding of the feeder.
- Loading surface of the vice.

4.10. Worn pieces replacement

4.10.1. Hard metal guides replacement

If the hard metal guides cannot be adjusted, they have to be replaced.

1. Dismantle the saw band. Remove the hosepipe leading the cooling agent. Dismantle guide cube of the saw band.

2. Loosen the adjusting screws of the metal guide.

3. Loosen the binding screw of first metal guide. Remove adjustable hard metal guide.

4. Loosen the binding screw of second metal guide. Remove the hard metal guide
5. Insert new hard metal guides and fasten them tightly.
6. Mount the saw band. Adjust the hard metal guides.

4.10.2. Round brush replacement

If the chip removing brush is so worn, that it does not fulfil its function, the brush must be replaced.

1. Release the nut of the brush, exchange old brush to new brush and screw on the nut of the brush.
2. Set the brush to the saw band.

4.10.3. Saw band guiding rollers replacement

ATTENTION!
Guiding pulleys must be replaced together on both guiding cubes!!

If the saw band is not sufficiently guided by guiding pulleys or if the pulleys are obviously worn, the pulleys should be replaced.

1. Dismantle the saw band.
2. Disconnect the hose from the cooling agent, screw off the pressure regulation. Let the pressure regulation connected to the hydraulic system. Dismantle the guiding cube of the saw band..

ATTENTION!
Mark both eccentrics placing and components on the eccentric!
Eccentrics must not be replaced with each other!!

3. Tighten the guiding cube to the vice and dismantle both eccentrics with bearings following way.

4. Screw off nuts from eccentrics..

5. Remove eccentrics from bearings by means of the swager

6. Change all bearings and other worn parts.

ATTENTION!
Do not replace the eccentrics placing in the cube

7. Install eccentrics to the cubes. Install components on both eccentrics in given order. Put bearings by means of the preparation on eccentrics.

8. Screw on nuts on both eccentrics and tighten them.

9. Insert the saw band to the guiding cube (ca. 15 – 20 cm). Set the eccentrics by means of the wrenches, the saw band must run in the centre. Guide pulleys must not press too much on the band, but must spin freely during the band run.

10. Tighten nuts on both eccentrics.
11. Remove the testing piece of saw band from the cube lead. Install the guiding cube on the machine and connect the pressure regulation to the cut and cooling. Install the saw band.

4.11. Stretching wheel replacement

1. Dismantle the saw band.

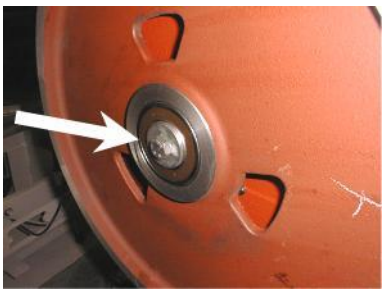

2. Screw off the screw and take down the washer.

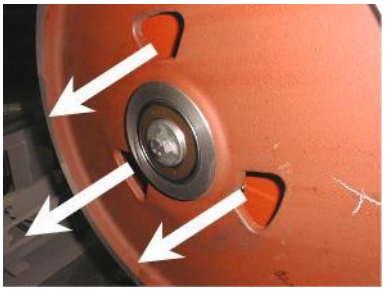

3. Pull off the wheel from the shaft by means of the three-armed puller. If bearing stayed on the shaft, pull off it too
4. Check score of the bearings of the stretching wheel and replace them for new.

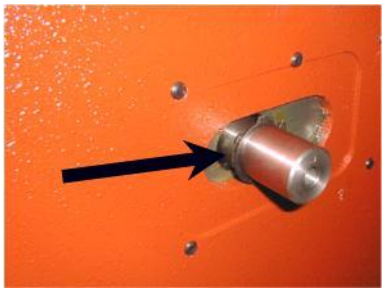

5. Clean the shaft and grease it with oil. Insert retaining ring to the groove.

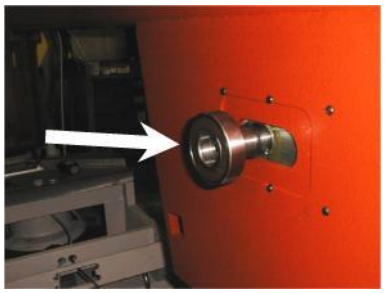

6. Install bearing on the shaft and move it to the retaining ring. Insert the distance ring on the shaft and move it to the bearing.

7. Insert the retaining ring to the hole in the wheel.

8. Insert the bearing to the hole in the wheel and press it to the retaining ring.

9. Put the wheel on the shaft and screw on the preparation to the wheel stretching to the hole in the shaft.

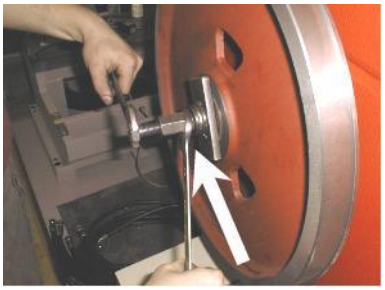

10. Pull on the wheel on the shaft.

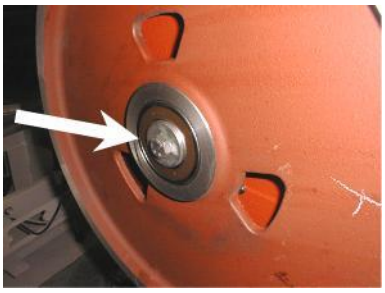

11. Screw on washer and screw back..
12. Install the saw band. Wheel replacement is ready.

4.11.1. Driving wheel replacement

1. Dismantle the saw band

2. Screw off the screw and remove the washer.

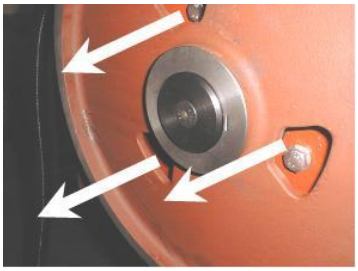

3. Pull off the wheel from the shaft by means of the three-armed puller.

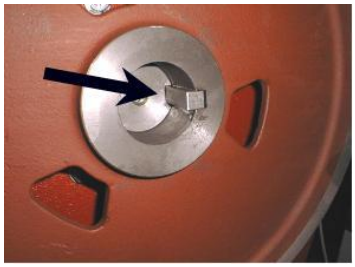

4. Install the wheel on the shaft. Insert the feather to the groove.

5. Screw on the preparation to the wheel stretching to the hole in the shaft. Pull on the wheel on the shaft.

6. Screw on washer and screw back.
7. Install the saw band. Wheel replacement is ready.

4.11.2. Cooling pump replacement

Only a qualified worker can carry out the connection!

High-voltage shock may have fatal results

1. Pull the tank with the liquid from the pedestal..
2. Remove the hosepipe leading to the cooling agent from the plug on the pump. Screw off four screws from the cooling pump flange and pull out the pump from the sheet metal holder.

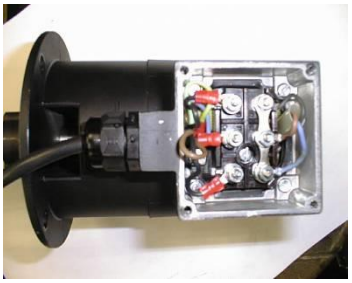

3. Remove the cover of the pump terminal switchboard. Disconnect 4 terminal connectors of the input cables. Cables are identified according to the red clamps..

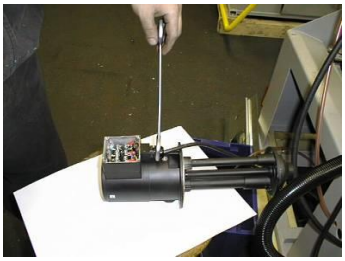

4. Loosen the bushing and pull the cable out from the pump.

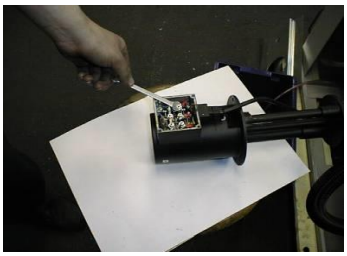

5. Dismantle new pump switchboard cover. Push the cable through the bushing and fasten it.

6. Screw on the cable bushing and cover of the terminal block. Do not forget the rubber gasket! Tighten the cooling liquid hose with non-stick tape and screw it again. Install cooling liquid hose, place the pump on the sheet metal holder and screw it

5. Závady / Troubleshooting

5.1. Mechanical problems

Problem	Possible causes	Repair
1. Slanting cut	- Wrongly adjusted hard metal guides.	Set according to the chapter „Servicing and adjustment“
	- Worn hard metal guides.	Replace to the chapter „Worn pieces replacement“
	- Wrongly adjusted cubes of the saw band guiding.	Set according to the chapter „Servicing and adjustment“
	- Worn bearings of the saw band guiding.	Replace according to the chapter „Worn pieces replacement“
	- Wrongly adjusted swarf brush.	Set according to the chapter „Servicing and adjustment“
	- Worn swarf brush.	Replace according to the chapter „Worn pieces replacement“
	- Insufficient saw band stretching.	Rise the saw band stretching and set the limit switch.
	- Wrongly chosen tooth system of the saw band.	Replace the saw band and keep the instructions of manufacturer on new saw band choice.
	- Worn saw band.	Replace the saw band.
	- Wrongly balanced roller conveyor.	Set the roller conveyor.
	- Dirty feeding board.	Cleanse the feeding board from debris, chip and residue material.
	- Guiding arm and guiding cube are loosened.	Clamp the guiding arm.
	- Guiding arm and cube are too far from the material.	Set the guiding cube to the material.
	- Too fast cutting rate.	Lower the material feeding speed.
	- Unexpected oscillation in material quality.	Set the cut and feeding speed to the relevant material.
2. The cut is not cut upon desired angle	- Securing lever is loosened.	Check the securing lever efficiency and carry out its adjustment according to chapter „Servicing and adjustment“.
	- Set angle does not match the cut angle.	Check the angle adjustment with a protractor and possibly set it according to chapter „Servicing and adjustment“.
	- Insufficient saw band stretching.	Stretch the saw band and set the limit switch according to chapter „Servicing and adjustment“.
	- Guiding arm and guiding cube are loosened.	Fasten the guiding arm and the cube.
	- Dirt between material and clamping jaw.	Cleanse the material and mating jaw.
3. Short lifetime of the saw band	- Insufficient saw band stretching.	Raise the tightening of the saw band set the scanner of saw band tightening according to chapter „Servicing and adjustment“.
	- Worn swarf brush.	Check the swarf brush condition and replace it in case of excessive use as described in chapter „Worn pieces replacement“
	- Wrongly adjusted swarf brush.	Check swarf brush adjustment, set it according to chapter „Servicing and adjustment“
	- Over stretched saw band	Lower stretching of the saw band and set the limit switch of the saw band stretching according to chapter „Servicing and adjustment“
	- Wrongly adjusted hard metal guides.	Check the adjustment of the hard metal guides and carry out adjustment as described in chapter „Servicing and adjustment“
	- Worn hard metal guides of the saw	Check the condition of the hard metal guide and

Problem	Possible causes	Repair
	band.	if it is too worn, replace hard metal guides according to chapter „Worn pieces replacement“
	- Worn saw band guide bearings.	Check guiding bearings and if you notice some sort of excessive damage, replace them according to chapter„Worn pieces replacement“
	- Wrongly adjusted guiding cubes of the saw band.	Set guiding cube according to chapter „Servicing and adjustment“
	- Wrongly adjusted down feed and saw band speed.	Adjust the feeding and speed of a saw band according to values published by saw band manufacturer.
	- Different material quality.	Adjust feeding and speed of a saw band according to desired material (try cut-test).
	- Low-class saw band	Replace the saw band (contact your local accessory supplier for more information)
	- Wrongly chosen saw band tooth system.	Replace the saw band and keep instructions of the manufacturer on the choice.
	- Wrongly adjusted tracking.	Check the space between top of a saw band and driving wheel. Perhaps adjust the tracking as described in chapter „Servicing and adjustment“
4. Insufficient cut output.	- Worn saw band.	Replace the saw band and keep instructions of the manufacturer on the choice.
	- Wrong saw band tooth system.	Replace the saw band and keep instructions of the manufacturer on the choice.
	- Wrongly set down feed and speed of a saw band.	Set feed and speed of a saw band according to values published by saw band manufacturer.
5. The cut is not finished.	- Wrongly adjusted lower stop point of the saw frame.	Check lower limit switch and screw.
	- Stop point surface is messed-up.	Cleanse stop point surface of the limit switch from debris and residue material.
6. By choke is not possible turn	- Metal clamps between valve and panel.	Clamps must be removed and put on the shaft O-Ring about 10x2 mm.
	- Metal clams are in body of valve.	Valve must be cleared or changed.
7. Saw band drive cannot be started.	- Pressure switch is adjusted wrong.	Set the pressure switch according to chapter „Servicing and adjustment“
	- Pressure switch is defective.	Replace defective parts of the pressure switch.
8. The saw bands are cracked.	- In stretching wheel is wrong adjusting geometry.	Adjust distance band from recess wheel c.2 mm according to operating instructions.
	- Hard metal plates of circuit saw band are not adjusting.	Hard metal plates of circuit saw band must be adjusting according to operating instructions.
	- Guiding cubes are not adjusting (bearings + hard metal circuit)	Guiding cubes must be adjusting (bearings + hard metal circuit) according to operating instructions.
	- Bearings of guiding cubes are used (rolling elements are damaged or outside ring of bearing has conical form).	Bearings of guiding cubes must be replaced. Bearings must be adjusting according to operating instructions.
9. Damage tooth system of the saw band	- In gripping the lifting cylinder is backlash.	
	- Squeezed pin upper or downer holder of the lifting cylinder.	Exchange complete upper or downer holder of lifting cylinder.
10. The saw is cut downing.	- Geometry of hardmetal guiding cubes is wrong adjusted.	Hardmetal guiding cubes must be adjusted.
	- Bearings of guiding cubes are used.	Bearings of guiding cubes must be replaced.
11. Cleansing of the saw band is not functional.	- Elastic wheel of the brush drive is worn-down.	Elastic wheel of the brush must be changed.

Problem	Possible causes	Repair
	- Knurling of the driving wheel is worn-down.	Driving wheel must be changed.
	- The shaft of the brush drive is rusted.	The shaft of the brush must be cleaned and oiled.
	- The brush position and the brush cover is adjusted wrong – with the brush cannot be turned.	The brush cover must be posed, in order to the brush can be turned.
12. The saw arm periodically rise and fall during the cut; this cause short lifetime of the saw band.	- Backslash in driving wheel lodgement on the shaft.	Change the driving shaft for a long one, new bearings, distance ring, new driving wheel, spring, two covers on the forehead of the shaft + screws.
	- Worn channel for spring.	

5.2. Electric and hydraulic problems

Problem	Possible causes	Repair
1. Machine is not possible start.	- In socket is not voltage	Line voltage must be checked.
	- Transfer relay is closed (thermal protector)	Each FA relay must be checked.
	- Limit switch of saw band stretching, cover of frame or cover of saw band is not started.	Check of saw band stretching and covers closing.
2. When cut is finished, the frame is not raising.	- Bottom limit switch is adjusted wrong.	Bottom limit switch must be adjusted according to chapter ADJUSTING.
	- In hydraulic (pneumatic) ring is error. HYTOS (BOSCH) is not acting to frame uplift.	Function of magnetic valve must be checked, valve must be closed, voltage of clamps and inductor must be checked.
3. Electric motor and pump are without voltage. Between contactor and thermal protector is not voltage.	- Wrong contactor.	Replace contactor of engine.
4. The indicator of speed saw band is not functional.	- Sensor of speed is not adjusted.	Sensor of speed must be adjusted.
	- Defective display	The display must be changed.
	- Wrong sensor – diode of indicator speed is not light.	Sensor must be changed and adjusted.
5. Protector is switched off from engine hydraulic aggregate MA3 sometimes.	- Into hydraulic system is high working pressure.	Service engineer must reduce the pressure in hydraulic system.
6. The hydraulic aggregate cannot be started	Auxiliary contact on thermo-relay FA1 is defective.	Replace the defective contact on motor starter FA1.
7. Hydraulic aggregate is switched on but the saw arm or the main vice is not functional	- Wrong connection of electrical supply. The electrical phases are connected conversely.	The phases must be switched. Only service engineer can do this.
8. Cooling is not active	Lack of cooling agent.	Fill the tank with cooling agent.
	- Thermal relay is defective	Change the thermal relay
	- Input hosepipe is broken or obstructed.	Check the cooling circuit and perhaps cleanse

Problem	Possible causes	Repair
		cooling system.
	- Cooling pump protection is defective	Check the protection of cooling pump if need change it.
	- Cooling pump is defective.	Replace the cooling pump.

5.3. Hydraulic problems

Problem	Possible causes	Repair
1. Hydrogenerator not supplying oil	• reverse rotation	Check the connections of each phase. Reconnect properly connection of the electrical phases.
	• shortage of oil in the tank	Add hydraulic oil
	• Oil viscosity does not correspond prescribed viscosity value	Change hydraulic oil.
	• Hydrogenerator malfunction	Call service
	• Wrong power supply connection.	Check the connections of each phase. Reconnect properly connection of the electrical phases.
2. Hydraulic oil contains bubbles	• Hydraulic circuit is not adequately deaerated	Make deaeration of hydraulic circuit.
	• Low oil level	Add hydraulic oil
	• the pump shaft seals damaged	Call service
3. Increased mechanical noise	• damaged joint drive	Call service
	• damaged or destroyed motor bearings	Call service
	• air intake	Check for leaks.
4. Low pressure, pump supplies oil	• problem in the safety valve	Wrong settings. Check the settings and adjust the safety valve.
	• pump wear	Call service
	• external or internal leakage	Call service
5. Hydrogenerator is seized	• damage by solid particles in oil	Make oil filtration, or call the service.
	• non-prescribed oil	Change hydraulic oil.
	• wrong type of oil	Change hydraulic oil.
	• exceeding the life of the pump	Call service
6. Overheating oil	• cooler malfunction	Check the cooler function or call service.
	• wear the pump, the energy is converted into heat	Call service

7.	Hydraulic valve can not be readjusted	• electromagnet has no signal (voltage) - interrupted supply lines	Check again.
		• Electromagnet coil burnt	Replace coil – Call service.
		• spool valve sticking	Replace valve – Call service

Note:

Frequency Inverter
Do install the bandsaw machine at electrical Installation that corresponds recommended technical standards. We recommend to protect the machine using current protectores by characteristics U, able to compansate interchanges of rising current which escapes fromfilter of Frequency Inverter, so that additionalequipments to the machine will not be required than. We don't reccomend to protect a machine by a standard protector current, equipped by a smaller type under 100 mA. Standard used is 30 mA because of currnet escape in accordance of Frequency Inverters fitted on machine. Alternative soulutionshould be used currentprotector (FI) by sensitivity of 100 mA.

6. Schémata / Schemas / Schematics

6.1. Elektrické schema / Elektroschema / Wiring diagrams

6.1.1. 3x400V+PE, 50 Hz

Bomar, spol. s r.o.
Těžební 1236/1
627 00 Brno
Czech republic

WorkLine 610.450 DGH

ES-101.333-B1/B2-V5.3

Wiring diagram

3x400V+PE, 50Hz

Číslo dok./Doc.No./Anzahl der Dokumente.:	ES-101.333-B1/B2-V5.3
Napájení/Power supply/Einspeisung:	3x400V+PE, 50Hz
Zpracoval/Processed /Hat verarbeitet:	
Datum/Date/Datum:	27.08.2024
List/Page/Seite:	1
Listů/Pages/Seiten:	23

Název stránky/Name page/Name seiten:
Úvodní strana / Start page / Startseite

Stroj/Machine/Maschine:
WorkLine 610.450 DGH

BOMAR, s.r.o.
Těžební 1236/1
CZ 627 00, Brno

Obsah / Table of contents / Inhalt

Strana Page Seite	Název strany Page name Seitenname	Datum Date Datum
/1	Úvodní strana / Start page / Startseite	27.08.2024
/2	Obsah / Table of contents / Inhaltsverzeichnis	27.08.2024
/3	Kusovník artiklů / Parts list / Artikelstückliste	27.08.2024
/3.a	Kusovník artiklů / Parts list / Artikelstückliste	27.08.2024
/3.b	Kusovník artiklů / Parts list / Artikelstückliste	27.08.2024
/3.c	Kusovník artiklů / Parts list / Artikelstückliste	27.08.2024
/3.d	Kusovník artiklů / Parts list / Artikelstückliste	27.08.2024
/3.e	Kusovník artiklů / Parts list / Artikelstückliste	27.08.2024
/3.f	Kusovník artiklů / Parts list / Artikelstückliste	27.08.2024
/3.g	Kusovník artiklů / Parts list / Artikelstückliste	27.08.2024
/4	Rozmístění prvků v rozvaděči R1 / Placement of elements in enclosure R1 / Platzierung der Elemente im Schaltschrank R1	27.08.2024
/5	Ovládací panel OP1 / Control panel OP1 / Bedienpult OP1	27.08.2024
/6	Silová část / Power part / Feld partie	27.08.2024
/7	Silová část M1, M2, M3 / Power part M1, M2, M3 / Feld partie M1, M2, M3	27.08.2024
/8	Řidicí systém / Control system / Steuersystem	27.08.2024
/9	Tlačítka ovládací panel OP1 / Button control panel OP1 / Taste Bedienpult OP1	27.08.2024
/10	Vstupy / Inputs / Eingänge	27.08.2024
/11	Stýkače, M4 / Contactors, M4 / Schütze, M4	27.08.2024
/12	Hydraulické ventily, M4 / Hydraulic valves, M4 / Hydroventile, M4	27.08.2024
/13	Snímač výšky ramene - rychlost pilového pásu / Height sensor arm - speed band saw / Höhensensor Arm - Drehzahl Bandsäge	27.08.2024
/14	Bezpečnostní okruh / Safety circle / Sicherheitsbereich	27.08.2024
/15	Příslušenství / Accessories / Zubehör	27.08.2024
/16	SynchFree	27.08.2024

Kusovník artiklů / Parts list / Stückliste

Označení přístroje Device identification Geräteidentifikation	Typ přístroje Device description Gerätebeschreibung	Objednací číslo Type number Typennummer	Výrobce Manufacturer Hersteller	Skladové číslo Part number Lagernummer	Množství Quantity Menge	Umístění Location Stelle
-+RSN	Rozváděčová krabice Switchboard box Schaltschrank	30.M204-301	Bomar	30.M204-301	1	/13.6
-BM1	Bezpečnostní relé 24VDC, 3NO/1NC Safety relay 24VDC, 3NO/1NC Sicherheitsrelais 24VDC, 3NO/1NC	ABB.2TLA010040R0000	ABB	91.051.076	1	/14.5
-SN10.4	Indukční snímač vzdálenosti Inductive proximity sensor Induktive Näherungssensor	BAW R06AC-UAF20B-EP03	BALLUFF	91.172.016	1	/15.6
-A10.4	Odchylka pásu Band deviation Bandabweichung	BDM2	BOMAR s.r.o.	266.254	1	/15.2
-CU1	Řídící systém SMA 4.X Control unit SMA 4.X Die Steuereinheit SMA 4.X	SMA 4.02	BOMAR s.r.o.	91.995.223	1	/8.0
-SN1	Odměřovaní polohy Position measuring Positionsmessung	DH-RAM	Bomar	262.012	1	/13.8
-LP1	Signálka LED červená na adaptér Red LED light for adapter Red LED-Licht für Adapter	M22-LED-R	EATON	91.061.027	1	/11.1
-SB2	Hlavice dvoutlačítka bílá/černá start/stop Double button head white/black start/stop Doppelrundkopf weiß/schwarz Start/Stopp	M22-DDL-WS-GB1/GB0	EATON	91.060.034	1	/9.1
-SB2	Upevňovací adaptér Mounting adapter Montageadapter	M22-A	EATON	91.061.028	1	/9.1
-FU1	Pojistka trubičková - 2A/250V, pomalá, 5x20 Tube fuse - 2A/250V, slow, 5x20 Rohrsicherung - 2A / 250V, langsam, 5x20	T2A/250V	ESKA	91.230.001	1	/6.5
-FU2	Pojistka trubičková - 2A/250V, pomalá, 5x20 Tube fuse - 2A/250V, slow, 5x20 Rohrsicherung - 2A / 250V, langsam, 5x20	T2A/250V	ESKA	91.230.001	1	/6.5
-FU3	Pojistka trubičková - 4A/250V, pomalá, 5x20 Tube fuse - 4A/250V, slow, 5x20 Rohrsicherung - 4A / 250V, langsam, 5x20	T4A/250V	ESKA	91.230.015	1	/6.8

The manufacturer reserves right to use an equivalent replacement device.

2

Kusovník artiklů / Parts list / Stückliste

Označení přístroje Device identification Geräteidentifikation	Typ přístroje Device description Gerätebeschreibung	Objednací číslo Type number Typennummer	Výrobce Manufacturer Hersteller	Skladové číslo Part number Lagernummer	Množství Quantity Menge	Umístění Location Stelle
-RP1	Potenciometr 4k7 Potenciometer 4k7 Potentiometer 4k7	TP195 4k7/N20A	Elektronické součástky CZ, a.s	91.283.015	1	/7.4
-HV1A	Ventilový konektor, LED Valve Plug, LED Ventilanschluss, LED	VCAFA0322-LED	Finecables Co.,Ltd.	93.017.077	1	/12.1
-HV1B	Ventilový konektor, LED Valve Plug, LED Ventilanschluss, LED	VCAFA0322-LED	Finecables Co.,Ltd.	93.017.077	1	/12.2
-HV2A	Ventilový konektor, LED Valve Plug, LED Ventilanschluss, LED	VCAFA0322-LED	Finecables Co.,Ltd.	93.017.077	1	/12.3
-HV2B	Ventilový konektor, LED Valve Plug, LED Ventilanschluss, LED	VCAFA0322-LED	Finecables Co.,Ltd.	93.017.077	1	/12.5
-HV3	Ventilový konektor, LED Valve Plug, LED Ventilanschluss, LED	VCAFA0322-LED	Finecables Co.,Ltd.	93.017.077	1	/12.7
-PV1	Ventilový konektor, LED Valve Plug, LED Ventilanschluss, LED	VCAFA0322-LED	Finecables Co.,Ltd.	93.017.077	1	/12.8
-RP1	Hlavice potenciometru - 24mm Head of potentiometer 24mm Leiter Potentiometer 24mm	S8877 BLK	GES-ELECTRONICS, a.s.	91.060.063	1	/7.4
-RP2	Hlavice potenciometru - 24mm Head of potentiometer 24mm Leiter Potentiometer 24mm	S8877 BLK	GES-ELECTRONICS, a.s.	91.060.063	1	/13.3
-RP2	Potenciometr 4k7 Potenciometer 4k7 Potentiometer 4k7	TP195 4k7/N20A	Elektronické součástky CZ, a.s	91.283.015	1	/13.3
-RCF1	Filtr RFC vývodový Efferent RFC filter Ableitenden RFC Filter	FBOPR1624	Ing. Miroslav Vlček	91.041.015	1	/7.6
-RCF2	Filtr RFC vývodový Efferent RFC filter Ableitenden RFC Filter	FBOPR1624	Ing. Miroslav Vlček	91.041.015	1	/7.8

The manufacturer reserves right to use an equivalent replacement device.

3

Kusovník artiklů / Parts list / Stückliste

Označení přístroje Device identification Geräteidentifikation	Typ přístroje Device description Gerätebeschreibung	Objednací číslo Type number Typennummer	Výrobce Manufacturer Hersteller	Skladové číslo Part number Lagernummer	Množství Quantity Menge	Umístění Location Stelle
-RCF11	Filtr RFC vývodový Efferent RFC filter Ableitenden RFC Filter	FBOPR1624	Ing. Miroslav Vlček	91.041.015	1	/6.6
-RCF12	Filtr RFC vývodový Efferent RFC filter Ableitenden RFC Filter	FBOPR1624	Ing. Miroslav Vlček	91.041.015	1	/6.7
-+R10.4	Kleštinová vývodka Cable gland Kabelverschraubung	AG-1545.12.06	Schmachtl CZ s.r.o.	91.070.010	2	/15.6
-+R10.4	Matice černá Nut black Nuss schwarz	AG8245.12	Schmachtl CZ s.r.o.	91.072.010	2	/15.6
-FA1	Tepelné relé - 0.31A Thermal relay - 0.31A Thermische Relais - 0.31A	T16-0,31	ABB	91.050.020	1	/7.6
-FA2	Tepelné relé - 1,3A Thermal relay - 1.3A Thermorelais - 1,3A	ABB.T16-1,3	ABB	91.050.036	1	/7.8
-FU1	Svorka pojistková Fuse terminal Sicherungsklemme	WK4/THSi5U	WIELAND	91.251.102	1	/6.5
-FU2	Svorka pojistková Fuse terminal Sicherungsklemme	WK4/THSi5U	WIELAND	91.251.102	1	/6.5
-H10.4	Maják - základna Lighthouse - Base Leuchtturm - Basis	SL7-CB-100	EATON	91.063.058	1	/15.3
-H10.4	Maják - žlutý Lighthouse - yellow Leuchtturm - gelb	SL7-L-Y	EATON	91.063.059	1	/15.3
-H10.4	Žárovka 24V Lamp 24V Lampe 24V	SL7-L24	EATON	91.063.061	1	/15.3
-HL1	Signálka LED bílá na adaptér White LED light for adapter Weißes LED-Licht für Adapter	M22-LED-W	EATON	91.061.034	1	/14.8

The manufacturer reserves right to use an equivalent replacement device.

3.a

Kusovník artiklů / Parts list / Stückliste

Označení přístroje Device identification Geräteidentifikation	Typ přístroje Device description Gerätebeschreibung	Objednací číslo Type number Typennummer	Výrobce Manufacturer Hersteller	Skladové číslo Part number Lagernummer	Množství Quantity Menge	Umístění Location Stelle
-KM1	Ministykač - 4kW/400V, 3P Mini contactor - 4kW/400V, 3P Mini-Schütz - 4kW / 400V, 3P	B6S-30-01-1.7-71	ABB	91.040.049	1	/11.2
-KM2	Ministykač - 4kW/400V, 3P Mini contactor - 4kW/400V, 3P Mini-Schütz - 4kW / 400V, 3P	B6S-30-01-1.7-71	ABB	91.040.049	1	/11.4
-KM11	Stykač - 5,5kW/400V, 3P Contactor - 5,5kW/400V, 3P Schütz - 5,5kW / 400V, 3P	AF12-30-01-11	ABB	91.040.051	1	/14.7
-KM11	Pomocný kontakt - 1xNO Auxiliary contact - 1xNO Hilfskontakt - 1xNO	CA4-10	ABB	91.041.044	1	/14.7
-KM12	Stykač - 5,5kW/400V, 3P Contactor - 5,5kW/400V, 3P Schütz - 5,5kW / 400V, 3P	AF12-30-01-11	ABB	91.040.051	1	/14.8
-PA1	Pojistkový odpínač pro válcové vložky - 3P Switch fuse for the cylinder inserts - 3P Schalter Sicherung für den Zylindereinsätze - 3P	E 93/32	ABB	91.241.014	1	/7.1
-QS1	Kryt svorek Terminal shroud Klemmenabdeckung	OTS40T3	ABB	91.170.017	1	/6.0
-QS1	Rukojeť odpínače - černá Handle switch - black Griffschalter - schwarz	OHBS3RH	ABB	91.180.016	1	/6.0
-RE14	Paticové relé CR-P Plug-in relay CR-P Stecken Sie in Relais CR-P	CR-P024DC2	ABB	91.051.049	1	/12.6
-RE14	Patice pro relé Relay socket Relaissockel	CR-PSS	ABB	91.051.048	1	/12.6
-RP1	Svorka rychloupínací Fastconnect clamp Fast Connect Klemm	WAGO 224-112	WAGO	91.250.009	3	/7.4
-RP2	Svorka rychloupínací Fastconnect clamp Fast Connect Klemm	WAGO 224-112	WAGO	91.250.009	3	/13.3

The manufacturer reserves right to use an equivalent replacement device.

Kusovník artiklů / Parts list / Stückliste

Označení přístroje Device identification Geräteidentifikation	Typ přístroje Device description Gerätebeschreibung	Objednací číslo Type number Typennummer	Výrobce Manufacturer Hersteller	Skladové číslo Part number Lagernummer	Množství Quantity Menge	Umístění Location Stelle
-SA1	Upevňovací adaptér Mounting adapter Montageadapter	M22-A4	EATON	91.061.045	1	/9.6
-SA1	Kontaktní blok - 1NO Contact block - 1NO Kontaktblock - 1NO	M22-K10	EATON	91.061.022	3	/9.6
-SA2	Hlavice tlačítka - černá Head button - black Kopftaste - schwarz	M22-D-S	EATON	91.060.035	1	/15.1
-SA2	Upevňovací adaptér + 1NO Attaching adapter + 1NO Montageadapter + 1NO	M22-AK10	EATON	91.061.021	1	/15.1
-SB1	Total stop - hlavice + 3xNC Emergency-stop mushroom push - button + 3xNC Not-Aus-Pilz - Taster + 3 xNC	YW1B-V4E02R	IDEC	91.060.084	1	/14.2
-SB1	Kontakt - 1x NO Contact - 1x NO Kontakt - 1x NO	YW-E10	IDEC	91.061.044	1	/14.2
-SB2	Kontaktní blok - 1NO Contact block - 1NO Kontaktblock - 1NO	M22-K10	EATON	91.061.022	1	/9.1
-SB3	Kontaktní blok - 1NO Contact block - 1NO Kontaktblock - 1NO	M22-K10	EATON	91.061.022	1	/9.2
-SB4	Upevňovací adaptér Mounting adapter Montageadapter	M22-A	EATON	91.061.028	1	/9.2
-SB4	Kontaktní blok - 1NO Contact block - 1NO Kontaktblock - 1NO	M22-K10	EATON	91.061.022	1	/9.2
-SB4	Hlavice dvoutlačítka bílá/černá, zavřít/otevřít Double button head white/black, arrow close/open Doppelrundkopf weiß / schwarz, Pfeil Schließen / Öffnen	M22-DDL-WS-*	EATON	91.060.055	1	/9.2
-SB5	Kontaktní blok - 1NO Contact block - 1NO Kontaktblock - 1NO	M22-K10	EATON	91.061.022	1	/9.3

The manufacturer reserves right to use an equivalent replacement device.

3.c

Kusovník artiklů / Parts list / Stückliste

Označení přístroje Device identification Geräteidentifikation	Typ přístroje Device description Gerätebeschreibung	Objednací číslo Type number Typennummer	Výrobce Manufacturer Hersteller	Skladové číslo Part number Lagernummer	Množství Quantity Menge	Umístění Location Stelle
-SB6	Upevňovací adaptér Mounting adapter Montageadapter	M22-A	EATON	91.061.028	1	/9.4
-SB6	Hlavice dvoutlačítka bílá/černá šipka nahoru/dolů Double button head white/black, arrow up/down Doppelrundkopf weiß / schwarz, Pfeil nach oben / unten	M22-DDL-WS-*-*	EATON	91.060.054	1	/9.4
-SB6	Kontaktní blok - 1NO Contact block - 1NO Kontaktblock - 1NO	M22-K10	EATON	91.061.022	1	/9.4
-SB7	Kontaktní blok - 1NO Contact block - 1NO Kontaktblock - 1NO	M22-K10	EATON	91.061.022	1	/9.5
-SB8	Hlavice prosvětleného tlačítka modrá Blue transparent switch Blau transparent Schalter	M22-DL-B	EATON	91.060.132	1	/14.6
-SB8	Upevňovací adaptér + 1NO Attaching adapter + 1NO Montageadapter + 1NO	M22-AK10	EATON	91.061.021	1	/14.6
-TR1	Toroidní transformátor - 400V/230V/20V 4,5A 90VA Toroidal transformer - 400V / 230V / 20V 4,5A 90VA Ringkerntransformator - 400V / 230V / 20V 4,5A 90VA	400V/230V/20V 4,5A 90VA	KARBAN s.r.o.	91.080.023	1	/6.6
-SQ21	Bezpečnostní koncový spínač - 2xNC Safety Limit Switch - 2x NC Sicherheitsendschalter - 2x NC	QKS8	KEDU	91.173.012	1	/14.2
-SA1	Hlavice s otočným přepínačem - 4 polohy Head with rotary switch - 4 positions Kopf mit Drehschalter - 4 Positionen	M22 - WRK4	EATON	91.060.087	1	/9.6
-PA1	Pojistka válcová - 12A, 10x38, rychlá Tube fuse - 12A, 10x38, fast Rohrsicherung - 12A, 10x38, schnell	PV10 12A gG	OEZ	91.231.007	3	/7.1
-SQ2	Koncový spínač - 1NC+1NO Limit switch - 1NC+1NO Endschalter - 1NC+1NO	D4N-4A31	OMRON	91.173.007	1	/10.4
-SQ1	Koncový spínač - 1NC+1NO Limit switch - 1NC+1NO Endschalter - 1NC+1NO	D4N-4A31	OMRON	91.173.007	1	/10.3

The manufacturer reserves right to use an equivalent replacement device.

3.d

Kusovník artiklů / Parts list / Stückliste

Označení přístroje Device identification Geräteidentifikation	Typ přístroje Device description Gerätebeschreibung	Objednací číslo Type number Typennummer	Výrobce Manufacturer Hersteller	Skladové číslo Part number Lagernummer	Množství Quantity Menge	Umístění Location Stelle
-FM1	Frekvenční měnič - 3.7kW, 3x400VAC Frequency converter - 3.7kW, 3x400VAC Frequenzumrichter - 3.7kW, 3x400VAC	VFD9A0ME43AFNAA	DELTA ELECTRONICS, INC.	91.012.191	1	/7.0
-M2	Čerpadlo chlazení 120W Cooling pump 120W Kühlpumpe 120W	PA70/120	SAP srl	91.020.032	1	/7.6
-+R10.4	PS 41x89x74mm - šedá PS 41x89x74mm - grey PS 41x89x74mm - grau	Z54	SOS Electronic, spol. s r.o.	91.190.036	1	/15.6
-CU1	Konektor Connector Stecker	SHM10-5,08	EUROCLAMP	91.144.030	6	/8.0
-CU1	Konektor Connector Stecker	SHM02-5,08	EUROCLAMP	91.144.032	1	/8.0
-QS1	3 pólový odpínač, 16A Disconnector - 3P, 16A Trennschalter - 3P, 16A	OT16FT3	ABB	91.170.018	1	/6.0
-+R10.4	Svorka Clamp Klemmen	WAGO.260-301	WAGO	91.250.008	1	/15.6
-+R10.4	Koncová bočnice End side Endseite	WAGO.260-361	WAGO	91.252.003	1	/15.6
-+RSN	Svorka Clamp Klemmen	WAGO.260-301	WAGO	91.250.008	5	/13.6
-+RSN	Koncová bočnice End side Endseite	WAGO.260-361	WAGO	91.252.003	1	/13.6
-FU3	Svorka pojistková Fuse terminal Sicherungsklemme	WK4/THSi5U	WIELAND	91.251.102	1	/6.8

The manufacturer reserves right to use an equivalent replacement device.

3.e

Kusovník artiklů / Parts list / Stückliste

Označení přístroje Device identification Geräteidentifikation	Typ přístroje Device description Gerätebeschreibung	Objednací číslo Type number Typennummer	Výrobce Manufacturer Hersteller	Skladové číslo Part number Lagernummer	Množství Quantity Menge	Umístění Location Stelle
-M4	Ventilátor 24VDC, 154CFM Fan 24VDC, 154CFM Fan 24VDC, 154CFM	RDH1238 B2	Xinruilian Electronic Co.	91.015.126	1	/11.7

The manufacturer reserves right to use an equivalent replacement device.

3.f

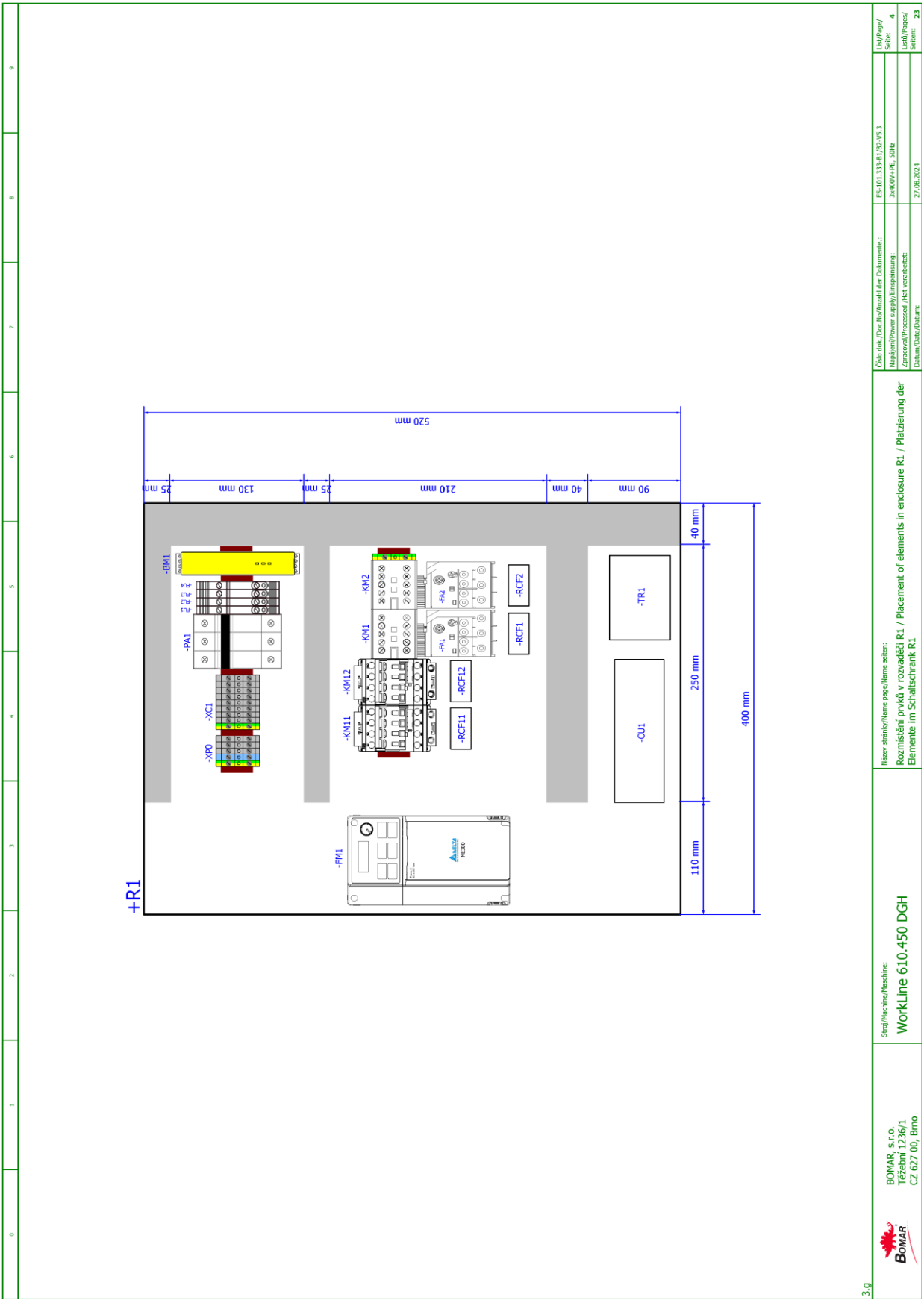
+R1
-BM1
-PA1
-XC1
-XP0
-KM11
-KM12
-KM1
-KM2
-FA1
-FA2
-RCF11
-RCF12
-RCF1
-RCF2
-FM1
-TR1
-CU1
520 mm
25 mm
130 mm
25 mm
210 mm
40 mm
90 mm
40 mm
250 mm
110 mm
400 mm
Číslo dok./Doc.No/Anzahl der Dokumente.:
ES-101.333-81/R2-V5.3
Napájení/Power supply/Einspeisung:
3x400V+PE, 50Hz
Zpracoval/Processed /Hat verarbeitet:
Datum/Date/Datum:
27.08.2024
List/Page/Seite: 4
List/Pages/Seiten: 23
Názov stránky/Name page/Name seiten:
Rozmístění prvků v rozváděči R1 / Placement of elements in enclosure R1 / Platzierung der Elemente im Schaltschrank R1
Stroj/Machine/Maschine:
WorkLine 610.450 DGH
BOMAR, s.r.o.
Těžební 1236/1
CZ 627 00, Brno
3.g

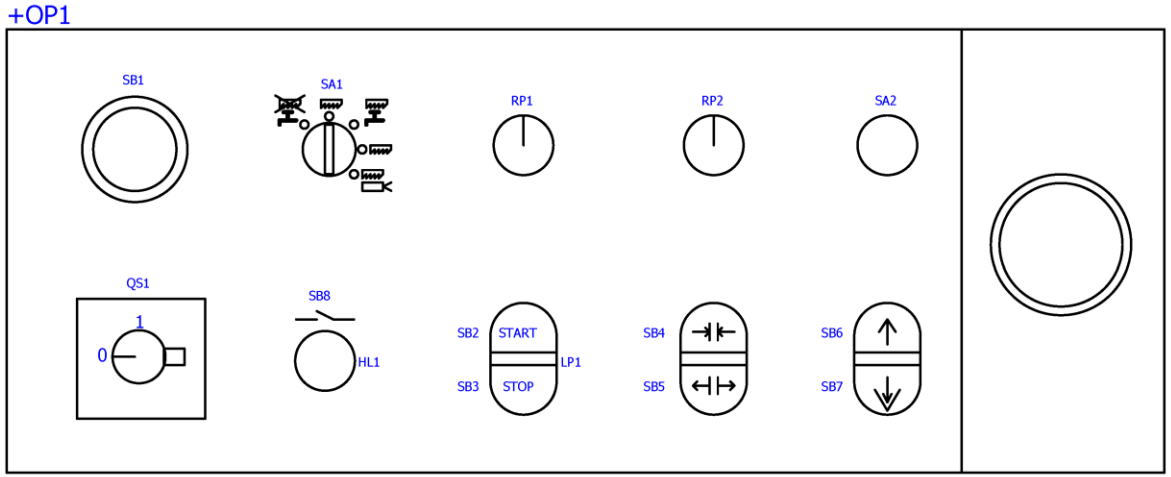

4

BOMAR, s.r.o. Těžební 1236/1 CZ 627 00, Brno	Stroj/Machine/Maschine: WorkLine 610.450 DGH	Název stránky/Name page/Name seiten: Ovládací panel OP1 / Control panel OP1 / Bedienpult OP1	Číslo dok./Doc.No/Anzahl der Dokumente.: ES-101.333-B1/B2-V5.3 Napájení/Power supply/Einspeinsung: 3x400V+PE, 50Hz Zpracoval/Processed /Hat verarbeitet: Datum/Date/Datum: 27.08.2024	List/Page/Seite: 5 Listů/Pages/Seiten: 23

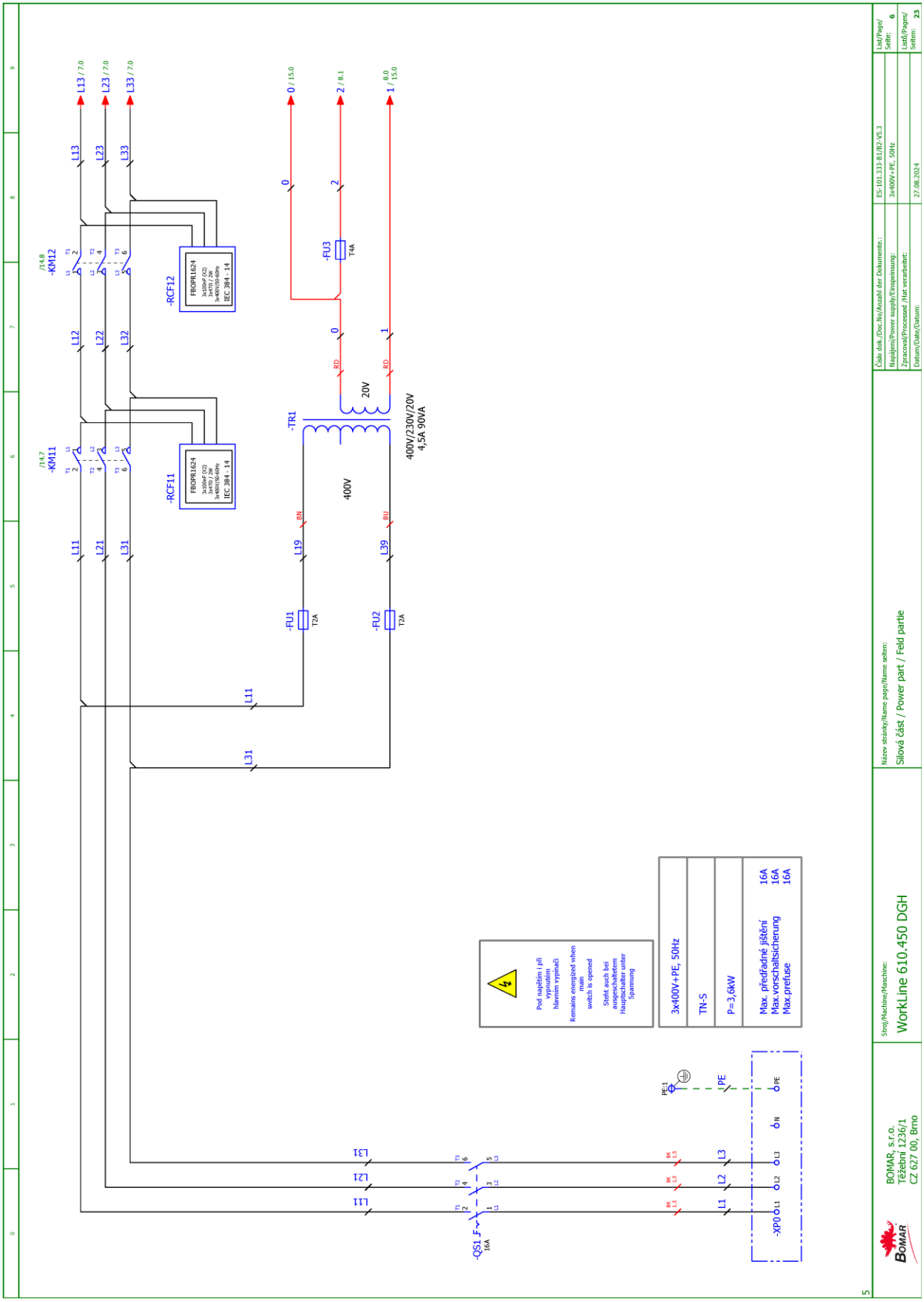
/147
-KM11
/148
-KM12
-RCF11
-RCF12
FBDPR1624
IEC 384 - 14
-TR1
400V
20V
400V/230V/20V
4,5A 90VA
-FU1
-FU2
-FU3
T2A
T4A
L11
L21
L31
L12
L22
L32
L13
L23
L33
L19
L39
0 / 15.0
2 / 8.1
1 / 15.0
Pod napětím i při vypnutém hlavním vypínači
Remains energized when main switch is opened
Steht auch bei ausgeschaltetem Hauptschalter unter Spannung
3x400V+PE, 50Hz
TN-S
P=3,6kW
Max. předřadné jištění 16A
Max.vorschaltsicherung 16A
Max.prefuse 16A
-QS1
16A
-XP0
PE
Číslo dok./Doc.No/Anzahl der Dokumente.:
ES-101.333-81/82-V5.3
Napájení/Power supply/Einspeisung:
3x400V+PE, 50Hz
Zpracoval/Processed /Hat verarbeitet:
Datum/Date/Datum:
27.08.2024
List/Page/Seite: 6
List/Pages/Seiten: 23
Název stránky/Name page/Name seiten:
Silová část / Power part / Feld partie
Stroj/Machine/Maschine:
WorkLine 610.450 DGH
BOMAR, s.r.o.
Těžební 1236/1
CZ 627 00, Brno

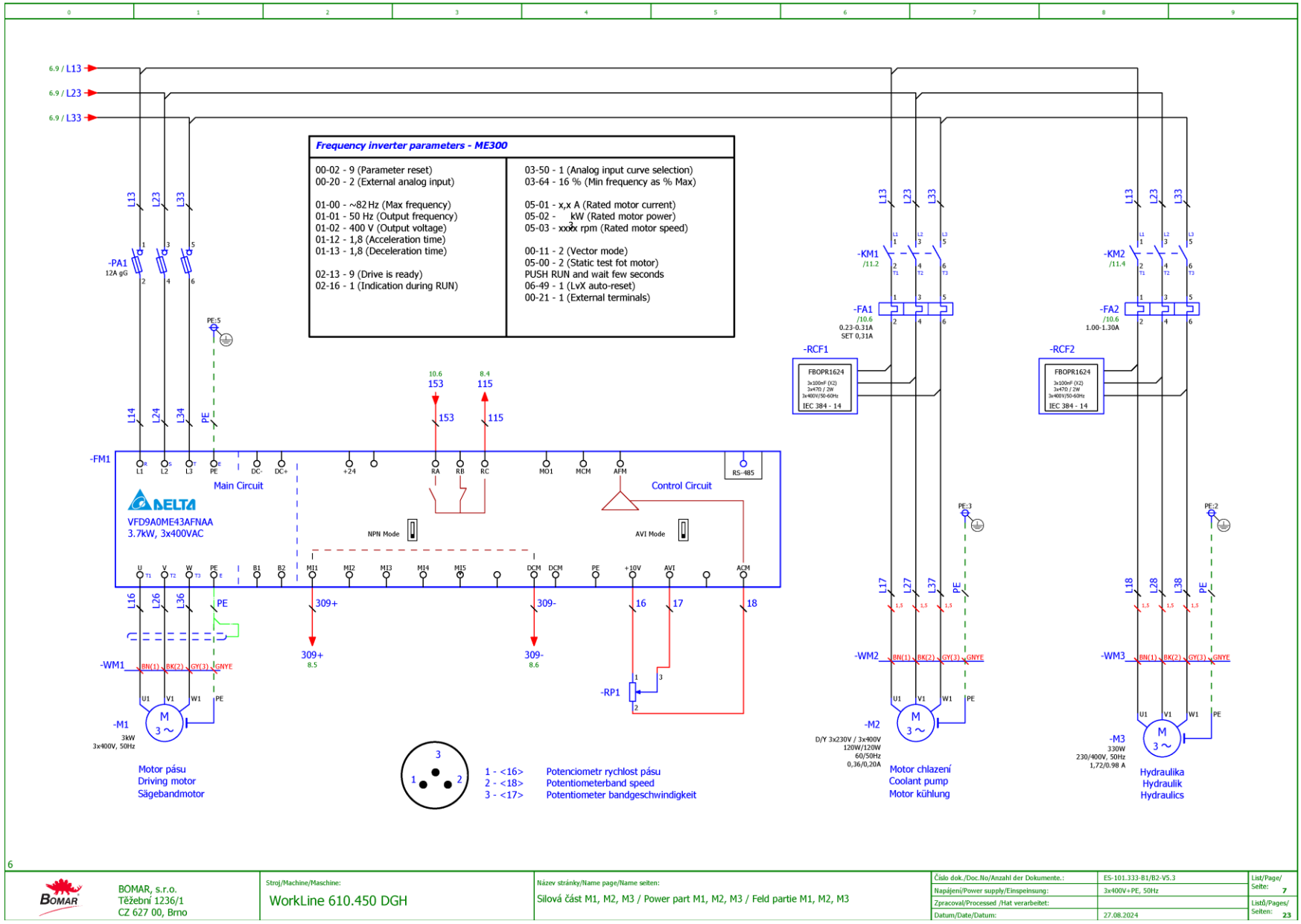

Schémata
Schemas
Schematics

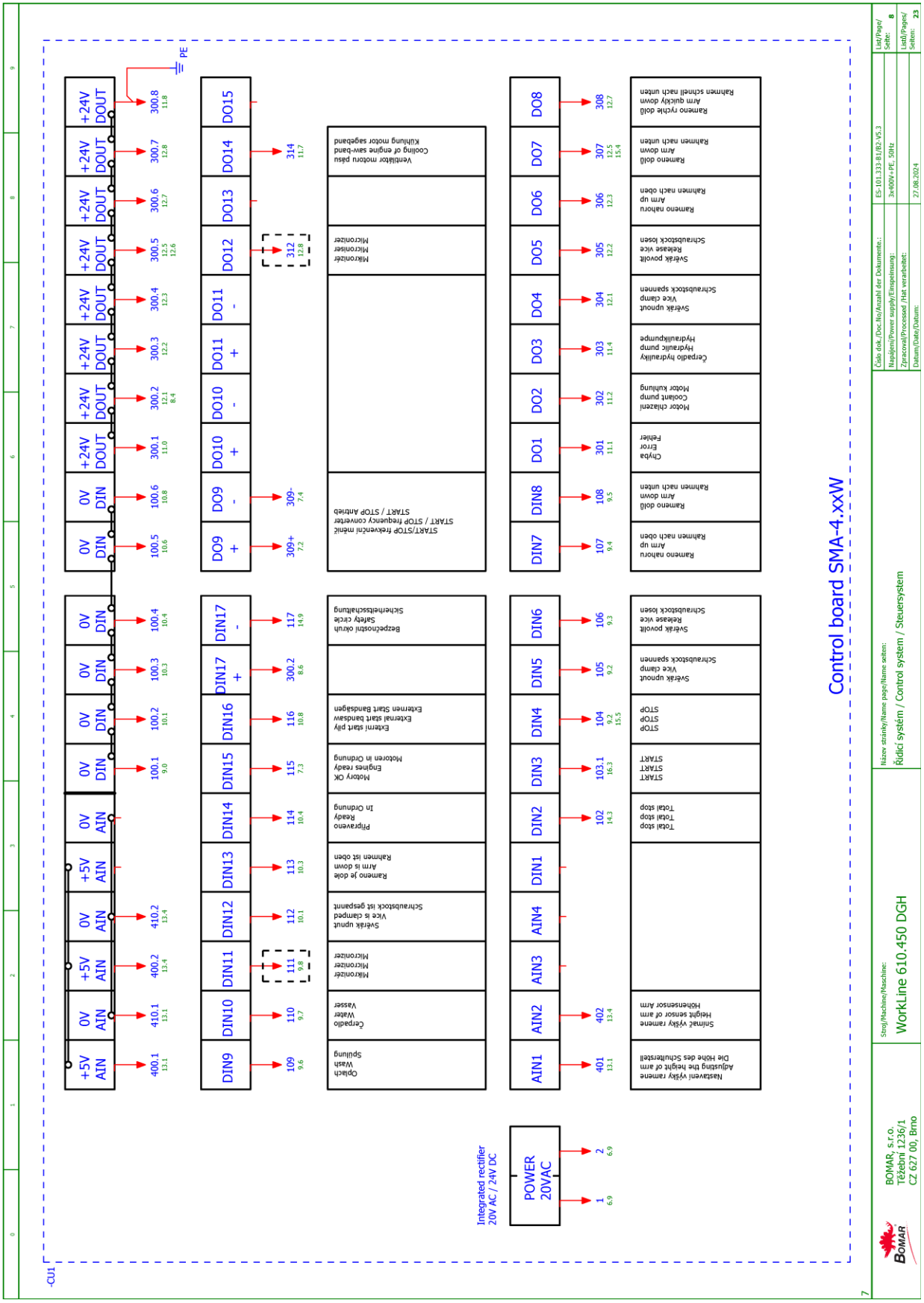
Control board SMA-4.xxW
-CU1
Integrated rectifier
20V AC / 24V DC
POWER
20VAC
1 6.9
2 6.9
AIN1 401 13.1
AIN2 402 13.4
AIN3
AIN4
DIN1
DIN2 102 14.3
DIN3 103.1 16.3
DIN4 104 9.2 15.5
DIN5 105 9.2
DIN6 106 9.3
DIN7 107 9.4
DIN8 108 9.5
DIN9 109 9.6
DIN10 110 9.7
DIN11 111 9.8
DIN12 112 10.1
DIN13 113 10.3
DIN14 114 10.4
DIN15 115 7.3
DIN16 116 10.8
DIN17 300.2 8.6
DO1 301 11.1
DO2 302 11.2
DO3 303 11.4
DO4 304 12.1
DO5 305 12.2
DO6 306 12.3
DO7 307 12.5 15.4
DO8 308 12.7
DO9 309+ 7.2
DO9 309- 7.4
DO12 312 12.8
DO14 314 11.7
+5V AIN 400.1 13.1
0V AIN 410.1 13.1
+5V AIN 400.2 13.4
0V AIN 410.2 13.4
0V AIN
+5V AIN
0V AIN
0V DIN 100.1 9.6
0V DIN 100.2 10.1
0V DIN 100.3 10.3
0V DIN 100.4 10.4
0V DIN 100.5 10.6
0V DIN 100.6 10.8
+24V DOUT 300.1 11.0
+24V DOUT 300.2 12.1 8.4
+24V DOUT 300.3 12.2
+24V DOUT 300.4 12.3
+24V DOUT 300.5 12.5 12.6
+24V DOUT 300.6 12.7
+24V DOUT 300.7 12.8
+24V DOUT 300.8 11.8
PE
Nastavení výšky ramene
Die Höhe des Schultersteil
adjusting the height of arm
Snímač výšky ramene
Height sensor of arm
Höhensensor Arm
Čerpadlo
Wasser
Water
Mikronizér
Micronizer
Mikronizer
Micronizer
Svěrák upnut
Vice is clamped
Schraubstock ist gespannt
Ramena je dole
Arm is down
Rahmen ist oben
Připraveno
Ready
In Ordnung
Motory OK
Engines ready
Motoren in Ordnung
Externí start pily
External start bandsaw
Externen Start Bandsägen
Bezpečnostní okruh
Safety circle
Sicherheitskreis
Ochlazení motoru pásu
Cooling of engine saw-band
Kühlung motor sageband
Mikronizér
Micronizer
Mikronizer
Micronizer
START/STOP frekvenční měnič
START / STOP frequency converter
START / STOP Antrieb
Rámeno nahoru
Arm up
Rahmen nach oben
Rámeno dolů
Arm down
Rahmen nach unten
Chyba
Error
Fehler
Motor chlazení
Coolant pump
Motor kühlung
Čerpadlo hydrauliky
Hydraulic pump
Hydraulikpumpe
Svěrák upnout
Vice clamp
Schraubstock spannen
Svěrák povolit
Release vice
Schraubstock lösen
Rámeno nahoru
Arm up
Rahmen nach oben
Rámeno dolů
Arm down
Rahmen nach unten
Rámeno rychle dolů
Arm quickly down
Rahmen schnell nach unten
START
START
START
STOP
STOP
STOP
Svěrák upnout
Vice clamp
Schraubstock spannen
Svěrák povolit
Release vice
Schraubstock lösen
Total stop
Total stop
Total stop
Stroj/Machine/Maschine:
WorkLine 610.450 DGH
Název stránky/Name page/Name seiten:
Řídicí systém / Control system / Steuersystem
BOMAR, s.r.o.
Těžební 1236/1
CZ 627 00, Brno
Číslo dok./Doc.No/Anzahl der Dokumente.:
ES-101.333-81/82-V5.3
Napájení/Power supply/Einspeisung:
3x400V+PE, 50Hz
Zpracoval/Processed /Hat verarbeitet:
Datum/Date/Datum:
27.08.2024
List/Page/Seite: 8
List/Pages/Seiten: 23

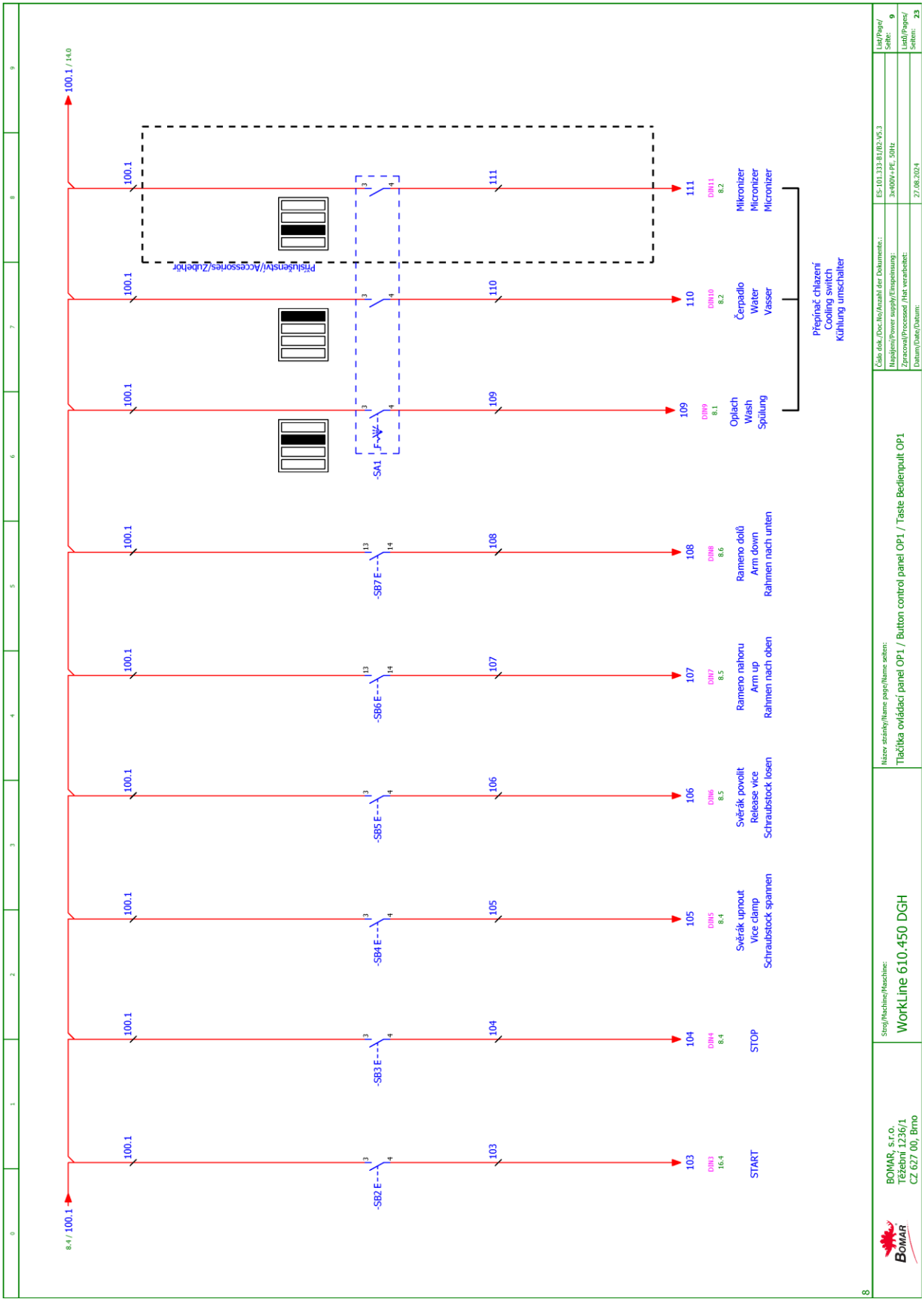
8.4 / 100.1
100.1 / 14.0
-SB2 E
-SB3 E
-SB4 E
-SB5 E
-SB6 E
-SB7 E
-SA1
Příslušenství/Accessories/Zubehör
103
104
105
106
107
108
109
110
111
DIN3 16.4
DIN4 8.4
DIN5 8.4
DIN6 8.5
DIN7 8.5
DIN8 8.6
DIN9 8.1
DIN10 8.2
DIN11 8.2
START
STOP
Svěrák upnout
Vice clamp
Schraubstock spannen
Svěrák povolit
Release vice
Schraubstock losen
Rameno nahoru
Arm up
Rahmen nach oben
Rameno dolů
Arm down
Rahmen nach unten
Oplach
Wash
Spülung
Čerpadlo
Water
Vasser
Mikronizer
Micronizer
Micronizer
Přepínač chlazení
Cooling switch
Kühlung umschalter
BOMAR, s.r.o.
Těžební 1236/1
CZ 627 00, Brno
Stroj/Machine/Maschine:
WorkLine 610.450 DGH
Název stránky/Name page/Name seiten:
Tlačítka ovládací panel OP1 / Button control panel OP1 / Taste Bedienpult OP1
Číslo dok./Doc.No/Anzahl der Dokumente:
ES-101.333.B1/B2-V5.3
Napájení/Power supply/Einspeisung:
3x400V+PE, 50Hz
Zpracoval/Processed /Hat verarbeitet:
Datum/Date/Datum:
27.08.2024
List/Page/Seite: 9
List(ů)/Pages/Seiten: 23

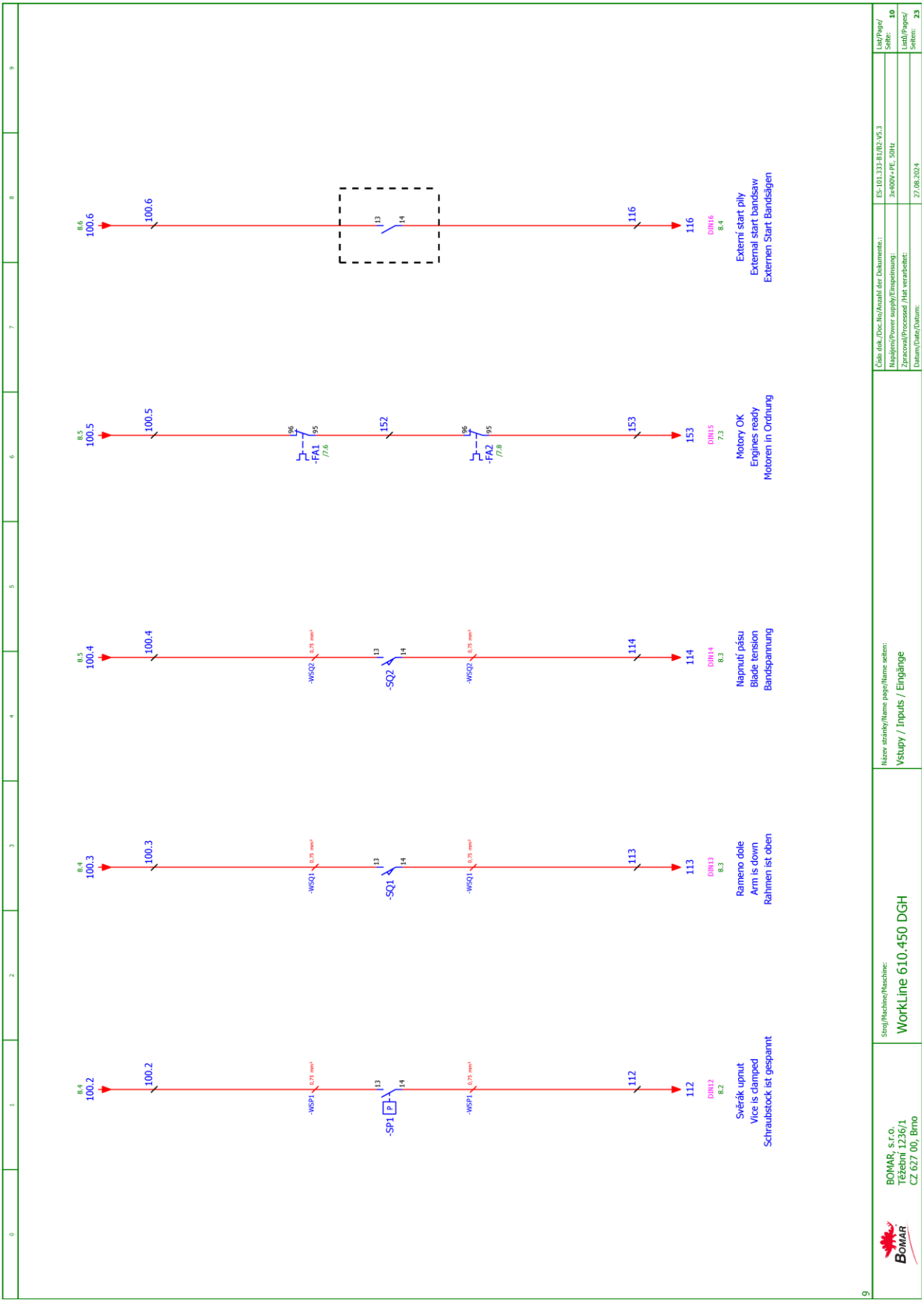
8.4
100.2
100.2
-WSP1
0,75 mm²
13
-SP1
P
14
-WSP1
0,75 mm²
112
112
DIN12
8.2
Svěrák upnut
Vice is clamped
Schraubstock ist gespannt
8.4
100.3
100.3
-WSQ1
0,75 mm²
13
-SQ1
14
-WSQ1
0,75 mm²
113
113
DIN13
8.3
Rameno dole
Arm is down
Rahmen ist oben
8.5
100.4
100.4
-WSQ2
0,75 mm²
13
-SQ2
14
-WSQ2
0,75 mm²
114
114
DIN14
8.3
Napnutí pásu
Blade tension
Bandspannung
8.5
100.5
100.5
96
-FA1
/7.6
95
152
96
-FA2
/7.8
95
153
153
DIN15
7.3
Motory OK
Engines ready
Motoren in Ordnung
8.6
100.6
100.6
13
14
116
116
DIN16
8.4
Externí start pily
External start bandsaw
Externen Start Bandsägen
BOMAR
BOMAR, s.r.o.
Těžební 1236/1
CZ 627 00, Brno
Stroj/Machine/Maschine:
WorkLine 610.450 DGH
Název stránky/Name page/Name seiten:
Vstupy / Inputs / Eingänge
Číslo dok./Doc.No/Anzahl der Dokumente.:
ES-101.333-81/82-V5.3
List/Page/
Seite: 10
Napájení/Power supply/Einspeisung:
3x400V+PE, 50Hz
Zpracoval/Processed /Hat verarbeitet:
List/Pages/
Seiten: 23
Datum/Date/Datum:
27.08.2024

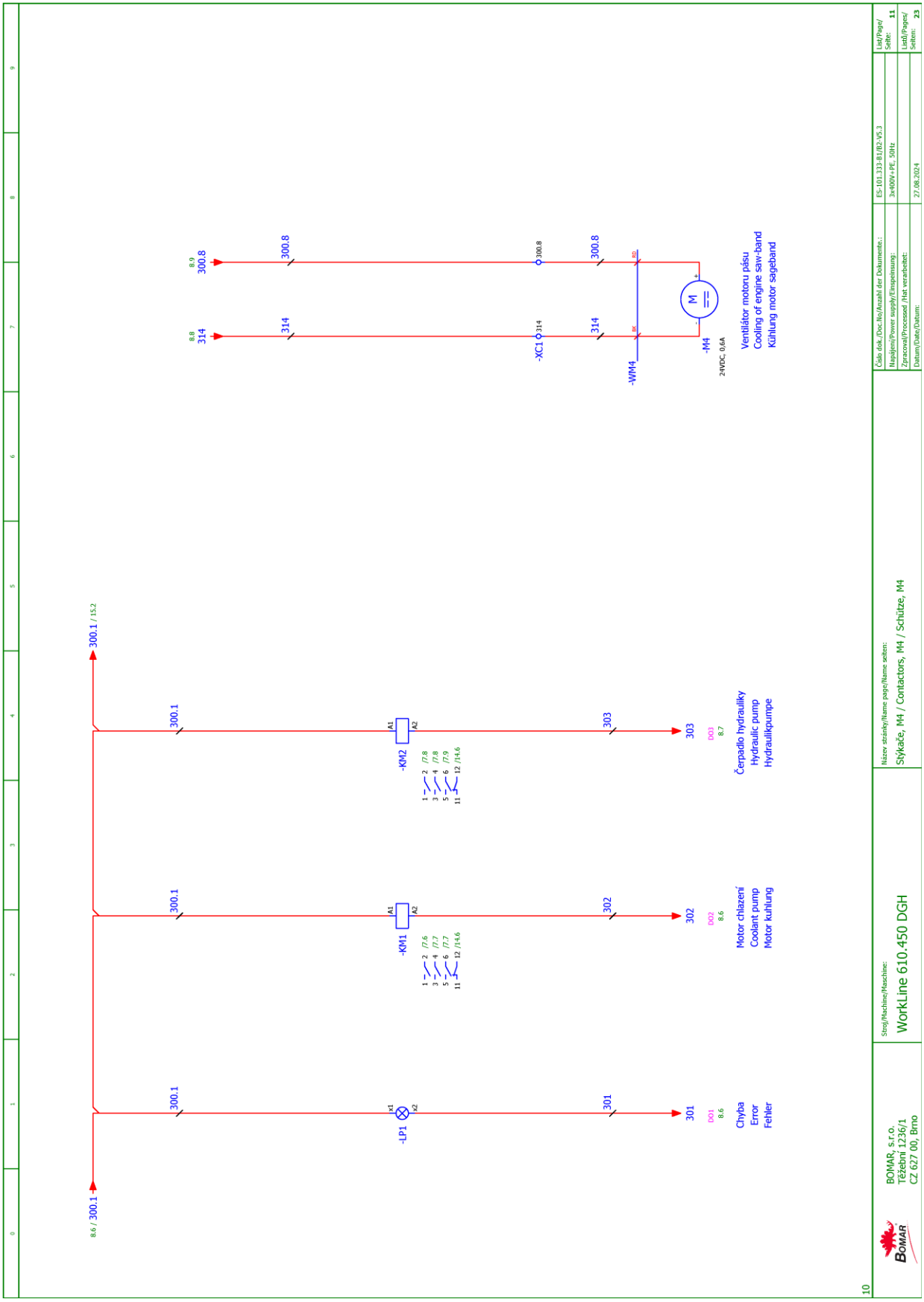
8.6 / 300.1
300.1 / 15.2
300.1
-LP1
A1
A2
301
DO1
8.6
Chyba
Error
Fehler
-KM1
302
DO2
8.6
Motor chlazení
Coolant pump
Motor kühlung
-KM2
303
DO3
8.7
Čerpadlo hydrauliky
Hydraulic pump
Hydraulikpumpe
8.8
314
8.0
300.8
-XC1
-WM4
-M4
24VDC, 0,6A
M
Ventilátor motoru pásu
Cooling of engine saw-band
Kühlung motor sageband
BOMAR, s.r.o.
Těžební 1236/1
CZ 627 00, Brno
Stroj/Machine/Maschine:
WorkLine 610.450 DGH
Název stránky/Name page/Name seiten:
Stýkače, M4 / Contactors, M4 / Schütze, M4
Číslo dok./Doc.No/Anzahl der Dokumente:
ES-101.333.81/82-V5.3
Napájení/Power supply/Einspeisung:
3x400V+PE, 50Hz
Zpracoval/Processed /Hat verarbeitet:
Datum/Date/Datum:
27.08.2024
List/Page/Seite: 11
List0/Pages/Seiten: 23
10

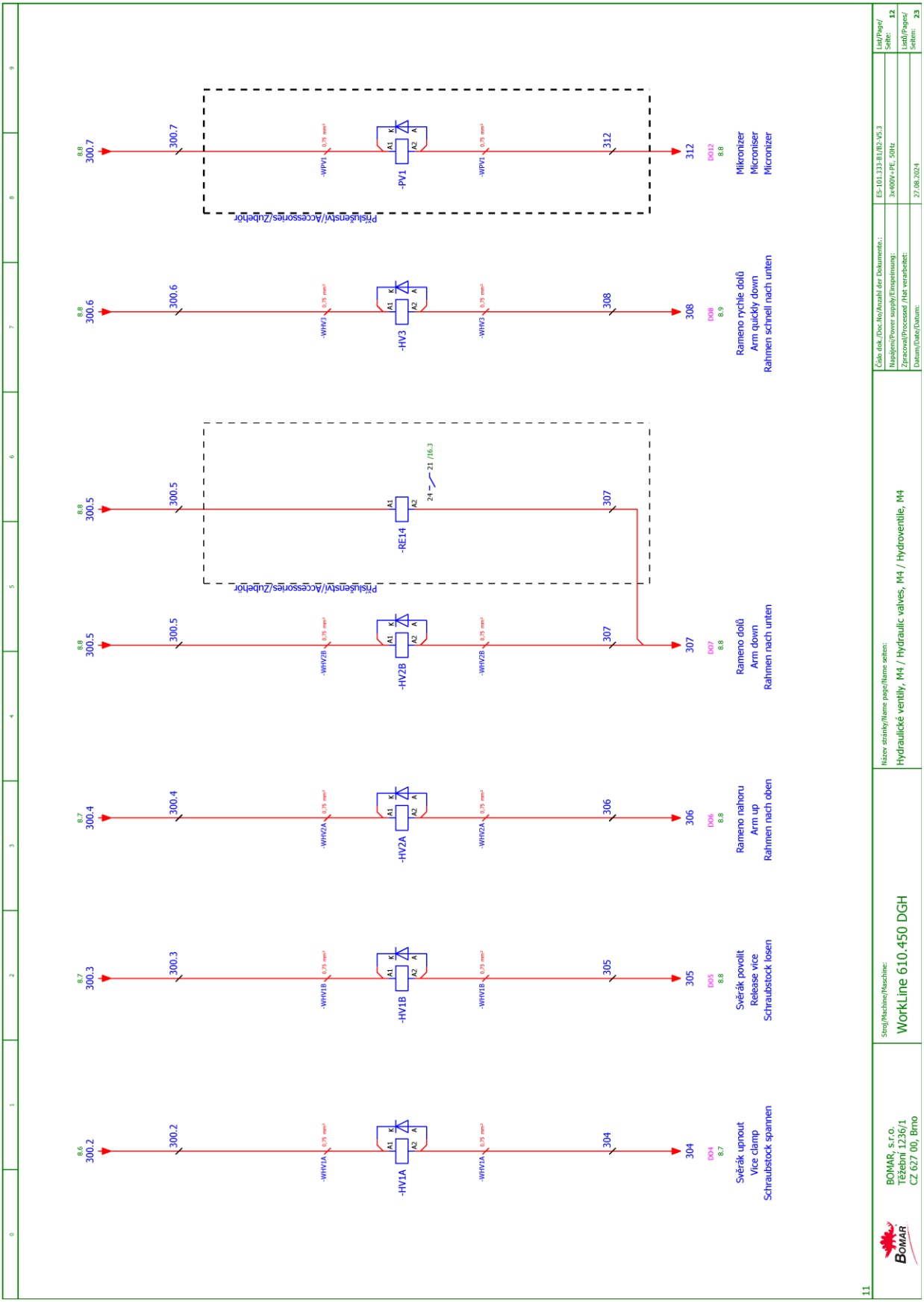
Svěrák upnout
Vice clamp
Schraubstock spannen
Svěrák povolit
Release vice
Schraubstock losen
Rameno nahoru
Arm up
Rahmen nach oben
Rameno dolů
Arm down
Rahmen nach unten
Rameno rychle dolů
Arm quickly down
Rahmen schnell nach unten
Mikronizer
Microniser
Micronizer
-HV1A
-HV1B
-HV2A
-HV2B
-HV3
-PV1
-RE14
Příslušenství/Accessories/Zubehör
BOMAR, s.r.o.
Těžební 1236/1
CZ 627 00, Brno
Stroj/Machine/Maschine:
WorkLine 610.450 DGH
Názvy stránky/Name page/Name seiten:
Hydraulické ventily, M4 / Hydraulic valves, M4 / Hydroventile, M4
Číslo dok./Doc.No/Anzahl der Dokumente.:
ES-101.333-81/82-V5.3
Napájení/Power supply/Einspeisung:
3x400V+PE, 50Hz
List/Page/Seite: 12
List/Pages/Seiten: 23
27.08.2024

Rychlost klesání ramene do řezu
Shoulder descent rate to cut
Armgeschwindigkeit zum Schneiden

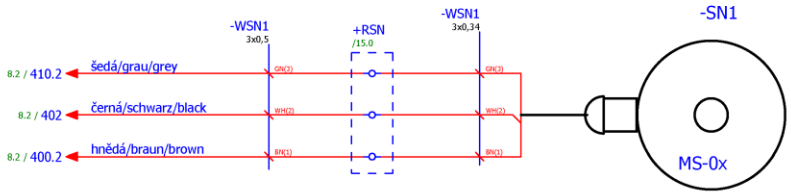

Snímač výšky ramene
Arm height sensor
Arm Höhensensor

12

BOMAR, s.r.o. Těžební 1236/1 CZ 627 00, Brno	Stroj/Machine/Maschine: WorkLine 610.450 DGH	Název stránky/Name page/Name seiten: Snímač výšky ramene - rychlost pilového pásu / Height sensor arm - speed band saw / Höhensensor Arm - Drehzahl Bandsäge	Číslo dok./Doc.No/Anzahl der Dokumente.: ES-101.333-B1/B2-V5.3 Napájení/Power supply/Einspeinsung: 3x400V+PE, 50Hz Zpracoval/Processed /Hat verarbeitet: Datum/Date/Datum: 27.08.2024	List/Page/Seite: 13 Listů/Pages/Seiten: 23

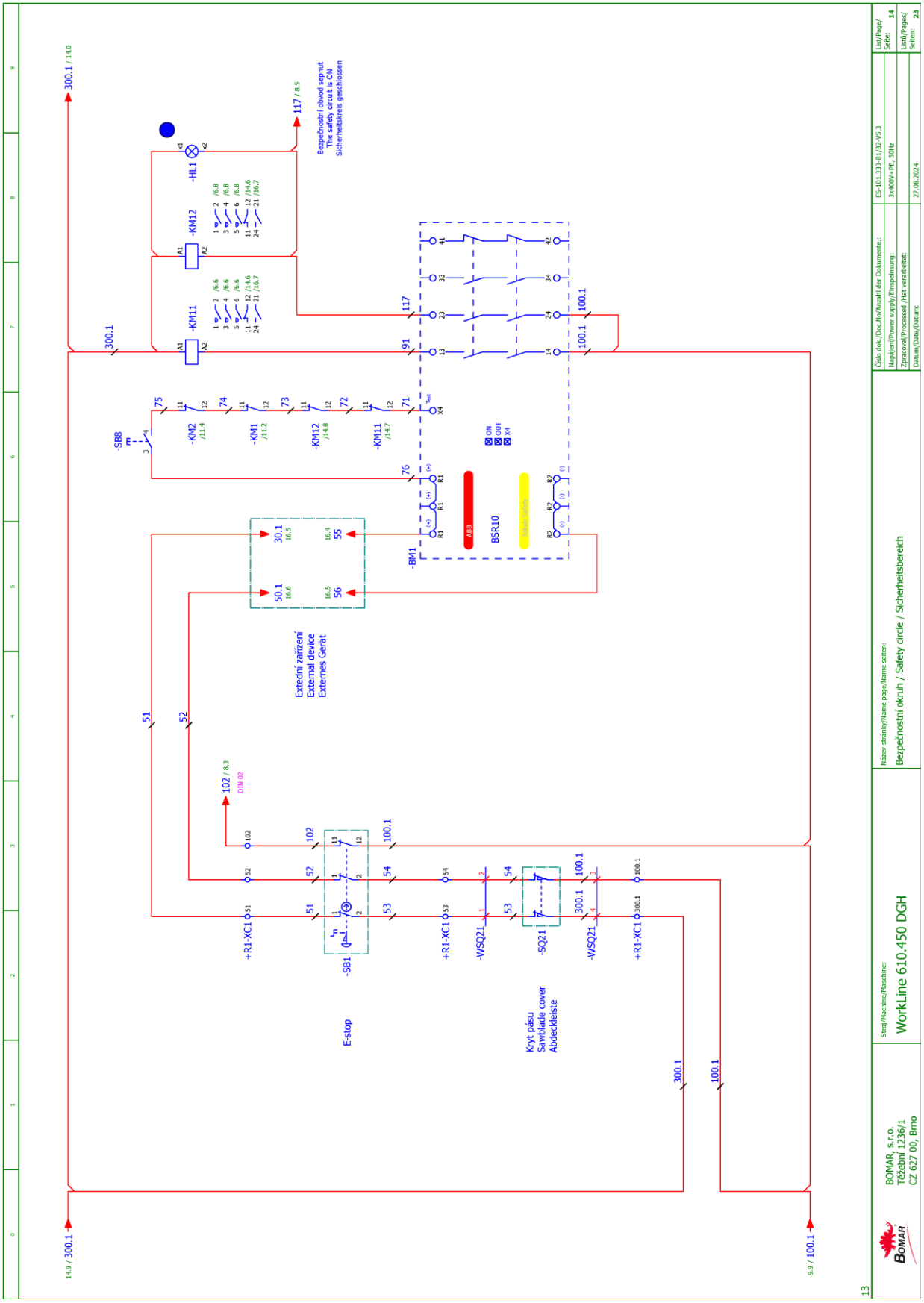
300.1 / 14.0
117 / 8.5
Bezpečnostní obvod sepnut
The safety circuit is ON
Sicherheitskreis geschlossen
-HL1
-KM12
-KM11
-SB8
-KM2 /11.4
-KM1 /11.2
-KM12 /14.8
-KM11 /14.7
-BM1
BSR10
AUB
Safety Safety
ON
OUT
X4
Extedni zařízení
External device
Externes Gerät
30.1 16.5
50.1 16.6
16.4 55
16.5 56
102 / 8.3
D.IN 02
+R1-XC1
-SB1
E-stop
-WSQ21
-SQ21
Kryt pásu
Sawblade cover
Abdeckleiste
149 / 300.1
9.9 / 100.1
Číslo dok./Doc.No./Anzahl der Dokumente.:
ES-101.333-81/B2-V5.3
Napájení/Power supply/Einspeisung:
3x400V+PE, 50Hz
Zpracoval/Processed /Hat verarbeitet:
Datum/Date/Datum:
27.08.2024
List/Page/Seite: 14
List/Pages/Seiten: 23
Název stránky/Name page/Name seiten:
Bezpečnostní okruh / Safety circle / Sicherheitsbereich
Stroj/Machine/Maschine:
WorkLine 610.450 DGH
BOMAR, s.r.o.
Těžební 1236/1
CZ 627 00, Brno
13

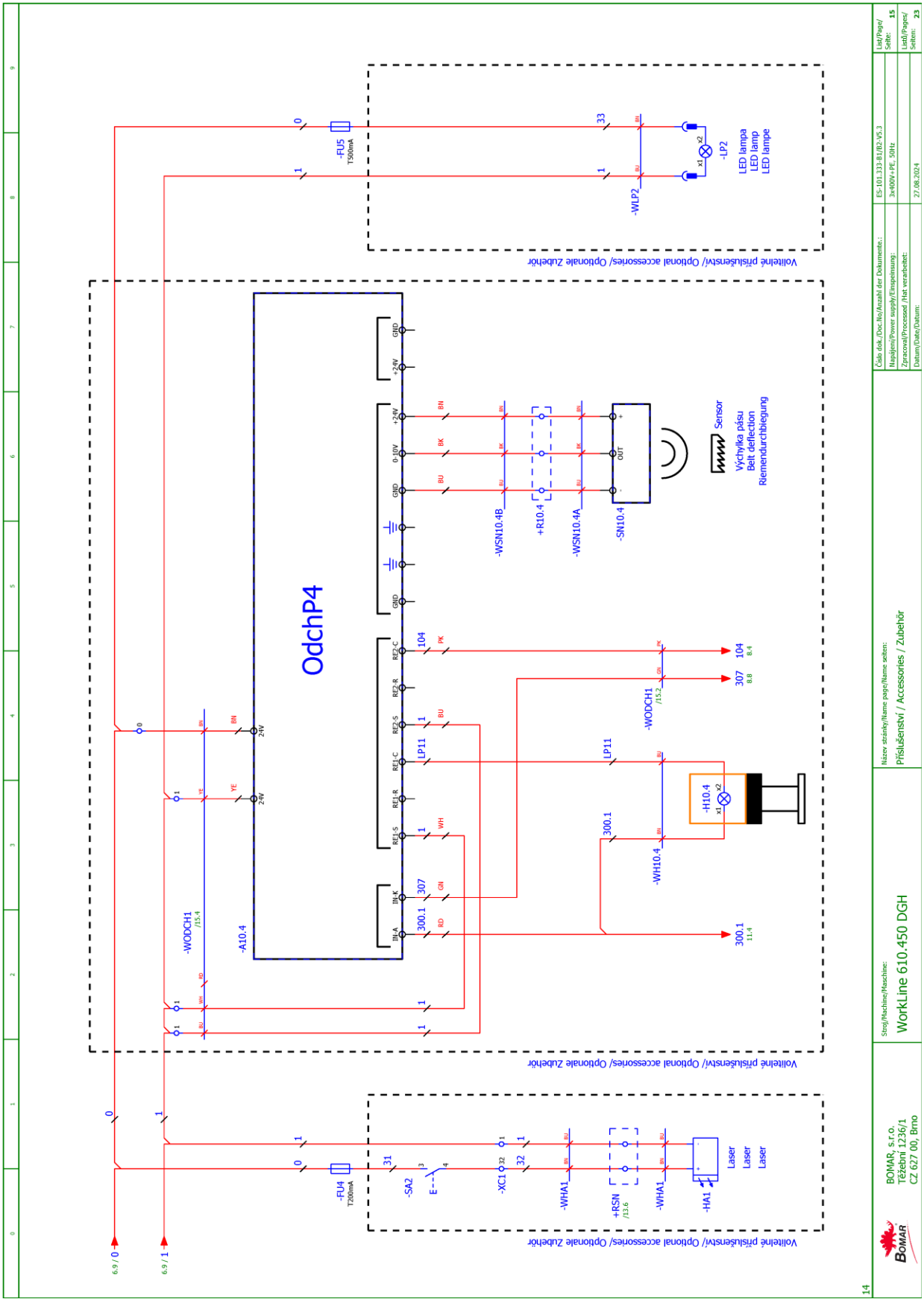
OdchP4
-A10.4
-WODCH1
-FU5
T500mA
-LP2
LED lampa
LED lamp
LED lampe
-WLP2
-WSN10.4B
+R10.4
-WSN10.4A
-SN10.4
Sensor
Výchylka pásu
Belt deflection
Riemendurchbiegung
-WODCH1
-H10.4
-WH10.4
-FU4
T200mA
-SA2
-XC1
-WHA1
+RSN
-HA1
Laser
Volitelné příslušenství/ Optional accessories/ Optionale Zubehör
Číslo dok./Doc.No/Anzahl der Dokumente:
ES-101.333.B1/B2-V5.3
Napájení/Power supply/Einspeisung:
3x400V+PE, 50Hz
Zpracoval/Processed /Hat verarbeitet:
Datum/Date/Datum:
27.08.2024
List/Page/Seite: 15
List0/Pages/Seiten: 23
Název stránky/Name page/Name seiten:
Příslušenství / Accessories / Zubehör
Stroj/Machine/Maschine:
WorkLine 610.450 DGH
BOMAR, s.r.o.
Těžební 1236/1
CZ 627 00, Brno
14

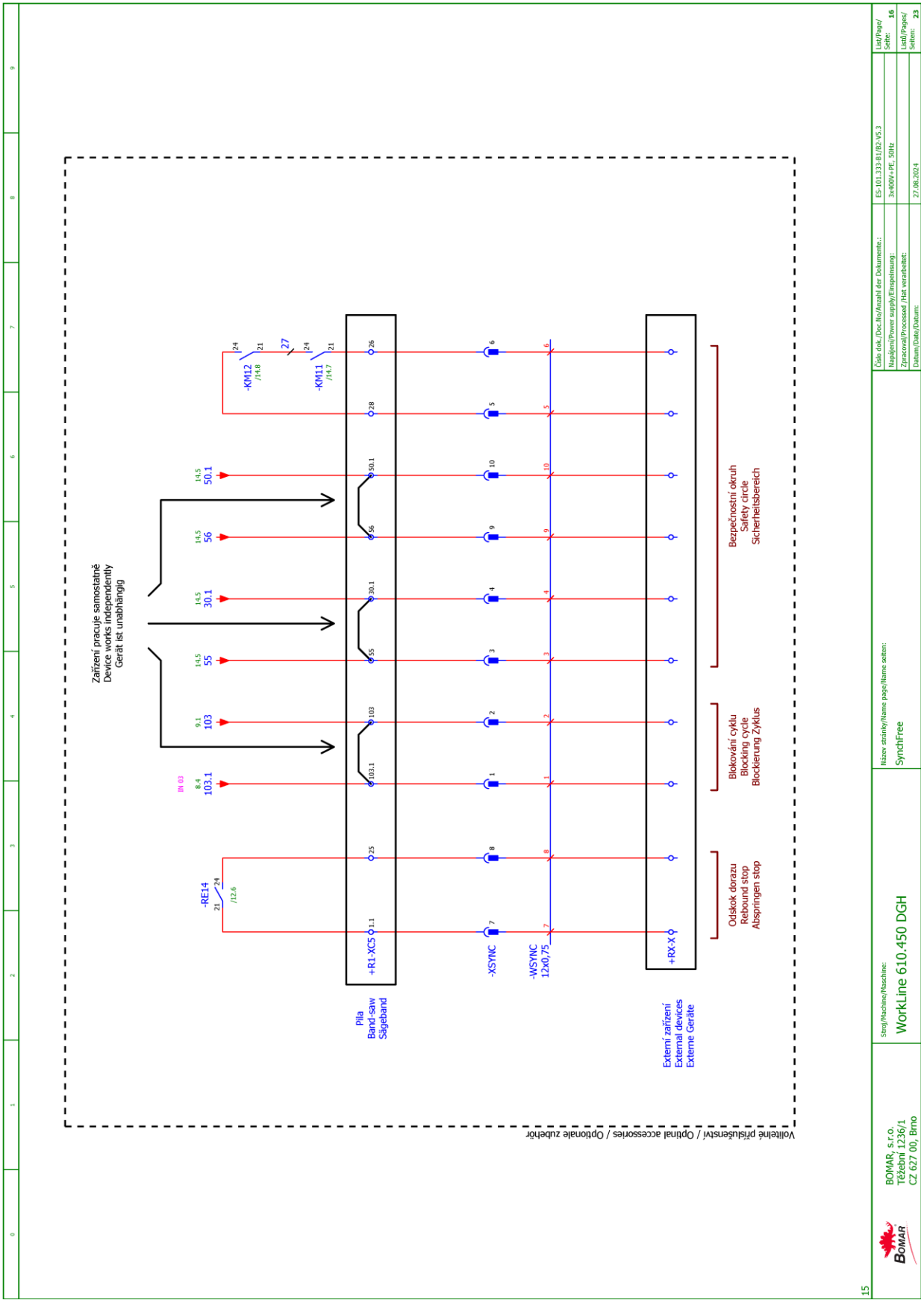
Zařízení pracuje samostatně
Device works independently
Gerät ist unabhängig
-RE14
/12.6
8.4
103.1
IN 03
8.1
103
14.5
55
14.5
30.1
14.5
56
14.5
50.1
-KM12
/14.8
27
-KM11
/14.7
+R1-XC5
Pila
Band-saw
Sägeband
-XSYNC
-WSYNC
12x0,75
+RX-X
Externí zařízení
External devices
Externe Geräte
Odskok dorazu
Rebound stop
Abspringen stop
Blokování cyklu
Blocking cycle
Blockierung Zyklus
Bezpečnostní okruh
Safety circle
Sicherheitsbereich
Volitelné příslušenství / Optional accessories / Optionale zubehör
Číslo dok./Doc.No./Anzahl der Dokumente.:
ES-101.333-81/82-V5.3
List/Page/
Seite:
16
Napájení/Power supply/Einspeisung:
3x400V+PE, 50Hz
List/Pages/
Seiten:
23
Zpracoval/Processed /Hat verarbeitet:
Datum/Date/Datum:
27.08.2024
Název stránky/Name page/Name seiten:
SynchFree
Stroj/Machine/Maschine:
WorkLine 610.450 DGH
BOMAR, s.r.o.
Těžební 1236/1
CZ 627 00, Brno
15

3x230V+PE, 50/60 Hz

Bomar, spol. s r.o.
Těžební 1236/1
627 00 Brno
Czech republic

WorkLine 610.450 DGH

ES-101.333-B3-V5.3

Wiring diagram

3x230V+PE, 50/60Hz

BOMAR, s.r.o.
Těžební 1236/1
CZ 627 00, Brno

Stroj/Machine/Maschine:
WorkLine 610.450 DGH

Název stránky/Name page/Name seiten:
Úvodní strana / Start page / Startseite

Číslo dok./Doc.No/Anzahl der Dokumente.:	ES-101.333-B3-V5.3
Napájení/Power supply/Einspeisung:	3x230V+PE, 50/60Hz
Zpracoval/Processed /Hat verarbeitet:	
Datum/Date/Datum:	27.08.2024
List/Page/Seite:	1
List/Pages/Seiten:	22

Obsah / Table of contents / Inhalt

Strana Page Seite	Název strany Page name Seitenname	Datum Date Datum
/1	Úvodní strana / Start page / Startseite	27.08.2024
/2	Obsah / Table of contents / Inhaltsverzeichnis	27.08.2024
/3	Kusovník artiklů / Parts list / Artikelstückliste	17.08.2021
/3.a	Kusovník artiklů / Parts list / Artikelstückliste	17.08.2021
/3.b	Kusovník artiklů / Parts list / Artikelstückliste	27.08.2024
/3.c	Kusovník artiklů / Parts list / Artikelstückliste	17.08.2021
/3.d	Kusovník artiklů / Parts list / Artikelstückliste	17.08.2021
/3.e	Kusovník artiklů / Parts list / Artikelstückliste	17.08.2021
/3.f	Kusovník artiklů / Parts list / Artikelstückliste	17.08.2021
/4	Rozmístění prvků v rozvaděči R1 / Placement of elements in enclosure R1 / Platzierung der Elemente im Schaltschrank R1	17.08.2021
/5	Ovládací panel OP1 / Control panel OP1 / Bedienpult OP1	01.09.2020
/6	Silová část / Power part / Feld partie	27.08.2024
/7	Silová část M1, M2, M3 / Power part M1, M2, M3 / Feld partie M1, M2, M3	27.08.2024
/8	Řidicí systém / Control system / Steuersystem	01.09.2020
/9	Tlačítka ovládací panel OP1 / Button control panel OP1 / Taste Bedienpult OP1	17.08.2021
/10	Vstupy / Inputs / Eingänge	01.09.2020
/11	Stýkače, M4 / Contactors, M4 / Schütze, M4	01.09.2020
/12	Hydraulické ventily / Hydraulic valves / Hydroventile	01.09.2020
/13	Snímač výšky ramene - rychlost pilového pásu / Height sensor arm - speed band saw / Höhensensor Arm - Drehzahl Bandsäge	17.08.2021
/14	Bezpečnostní okruh / Safety circle / Sicherheitsbereich	17.08.2021
/15	Příslušenství / Accessories / Zubehör	20.08.2021
/16	SynchFree	17.08.2021

Kusovník artiklů / Parts list / Stückliste

Označení přístroje Device identification Geräteidentifikation	Typ přístroje Device description Gerätebeschreibung	Objednací číslo Type number Typennummer	Výrobce Manufacturer Hersteller	Skladové číslo Part number Lagernummer	Množství Quantity Menge	Umístění Location Stelle
-+RSN	Rozváděčová krabice Switchboard box Schaltschrank	30.M204-301	Bomar	30.M204-301	1	/13.6
-BM1	Bezpečnostní relé 24VDC, 3NO/1NC Safety relay 24VDC, 3NO/1NC Sicherheitsrelais 24VDC, 3NO/1NC	ABB.2TLA010040R0000	ABB	91.051.076	1	/14.5
-SN10.4	Indukční snímač vzdálenosti Inductive proximity sensor Induktive Näherungssensor	BAW R06AC-UAF20B-EP03	BALLUFF	91.172.016	1	/15.6
-A10.4	Odchylka pásu Band deviation Bandabweichung	BDM2	BOMAR s.r.o.	266.254	1	/15.2
-CU1	Řídící systém SMA 4.X Control unit SMA 4.X Die Steuereinheit SMA 4.X	SMA 4.02	BOMAR s.r.o.	91.995.223	1	/8.0
-SN1	Odměřovaní polohy Position measuring Positionsmessung	DH-RAM	Bomar	262.012	1	/13.8
-LP1	Signálka LED červená na adaptér Red LED light for adapter Red LED-Licht für Adapter	M22-LED-R	EATON	91.061.027	1	/11.1
-SB2	Hlavice dvoutlačítka bílá/černá start/stop Double button head white/black start/stop Doppelrundkopf weiß/schwarz Start/Stopp	M22-DDL-WS-GB1/GB0	EATON	91.060.034	1	/9.1
-SB2	Upevňovací adaptér Mounting adapter Montageadapter	M22-A	EATON	91.061.028	1	/9.1
-FU1	Pojistka trubičková - 2A/250V, pomalá, 5x20 Tube fuse - 2A/250V, slow, 5x20 Rohrsicherung - 2A / 250V, langsam, 5x20	T2A/250V	ESKA	91.230.001	1	/6.4
-FU2	Pojistka trubičková - 2A/250V, pomalá, 5x20 Tube fuse - 2A/250V, slow, 5x20 Rohrsicherung - 2A / 250V, langsam, 5x20	T2A/250V	ESKA	91.230.001	1	/6.4
-FU3	Pojistka trubičková - 4A/250V, pomalá, 5x20 Tube fuse - 4A/250V, slow, 5x20 Rohrsicherung - 4A / 250V, langsam, 5x20	T4A/250V	ESKA	91.230.015	1	/6.8

The manufacturer reserves right to use an equivalent replacement device.

2

Kusovník artiklů / Parts list / Stückliste

Označení přístroje Device identification Geräteidentifikation	Typ přístroje Device description Gerätebeschreibung	Objednací číslo Type number Typennummer	Výrobce Manufacturer Hersteller	Skladové číslo Part number Lagernummer	Množství Quantity Menge	Umístění Location Stelle
-RP1	Potenciometr 4k7 Potenciometer 4k7 Potentiometer 4k7	TP195 4k7/N20A	Elektronické součástky CZ, a.s	91.283.015	1	/7.4
-HV1A	Ventilový konektor, LED Valve Plug, LED Ventilanschluss, LED	VCAFA0322-LED	Finecables Co.,Ltd.	93.017.077	1	/12.1
-HV1B	Ventilový konektor, LED Valve Plug, LED Ventilanschluss, LED	VCAFA0322-LED	Finecables Co.,Ltd.	93.017.077	1	/12.2
-HV2A	Ventilový konektor, LED Valve Plug, LED Ventilanschluss, LED	VCAFA0322-LED	Finecables Co.,Ltd.	93.017.077	1	/12.3
-HV2B	Ventilový konektor, LED Valve Plug, LED Ventilanschluss, LED	VCAFA0322-LED	Finecables Co.,Ltd.	93.017.077	1	/12.5
-HV3	Ventilový konektor, LED Valve Plug, LED Ventilanschluss, LED	VCAFA0322-LED	Finecables Co.,Ltd.	93.017.077	1	/12.7
-PV1	Ventilový konektor, LED Valve Plug, LED Ventilanschluss, LED	VCAFA0322-LED	Finecables Co.,Ltd.	93.017.077	1	/12.8
-RP1	Hlavice potenciometru - 24mm Head of potentiometer 24mm Leiter Potentiometer 24mm	S8877 BLK	GES-ELECTRONICS, a.s.	91.060.063	1	/7.4
-RP2	Hlavice potenciometru - 24mm Head of potentiometer 24mm Leiter Potentiometer 24mm	S8877 BLK	GES-ELECTRONICS, a.s.	91.060.063	1	/13.3
-RP2	Potenciometr 4k7 Potenciometer 4k7 Potentiometer 4k7	TP195 4k7/N20A	Elektronické součástky CZ, a.s	91.283.015	1	/13.3
-RCF0	RFC-filtr - 5.5 kW, 3x400V/230V, 25A RFC-filter - 5.5 kW, 3x400V/230V, 25A RFC-filter - 5.5 kW, 3x400V/230V, 25A	ATV31/5,5KW	Ing. Miroslav Vlček	91.041.027	1	/7.0
-RCF1	Filtr RFC vývodový Efferent RFC filter Ableitenden RFC Filter	FBOPR1624	Ing. Miroslav Vlček	91.041.015	1	/7.6

The manufacturer reserves right to use an equivalent replacement device.

3

Kusovník artiklů / Parts list / Stückliste

Označení přístroje Device identification Geräteidentifikation	Typ přístroje Device description Gerätebeschreibung	Objednací číslo Type number Typennummer	Výrobce Manufacturer Hersteller	Skladové číslo Part number Lagernummer	Množství Quantity Menge	Umístění Location Stelle
-RCF2	Filtr RFC vývodový Efferent RFC filter Ableitenden RFC Filter	FBOPR1624	Ing. Miroslav Vlček	91.041.015	1	/7.8
-RCF11	Filtr RFC vývodový Efferent RFC filter Ableitenden RFC Filter	FBOPR1624	Ing. Miroslav Vlček	91.041.015	1	/6.6
-RCF12	Filtr RFC vývodový Efferent RFC filter Ableitenden RFC Filter	FBOPR1624	Ing. Miroslav Vlček	91.041.015	1	/6.7
-+R10.4	Kleštinová vývodka Cable gland Kabelverschraubung	AG-1545.12.06	Schmachtl CZ s.r.o.	91.070.010	2	/15.6
-+R10.4	Matice černá Nut black Nuss schwarz	AG8245.12	Schmachtl CZ s.r.o.	91.072.010	2	/15.6
-FA1	Tepelné relé - 0.74A Thermal relay - 0.74A Thermische Relais - 0.74A	T16-0,74	ABB	91.050.021	1	/7.6
-FA2	Tepelné relé - 2.3A Thermal relay - 2.3A Thermorelais - 2,3A	ABB.T16-2,3	ABB	91.050.024	1	/7.8
-FU1	Svorka pojistková Fuse terminal Sicherungsklemme	WK4/THSi5U	WIELAND	91.251.102	1	/6.4
-FU2	Svorka pojistková Fuse terminal Sicherungsklemme	WK4/THSi5U	WIELAND	91.251.102	1	/6.4
-H10.4	Maják - základna Lighthouse - Base Leuchtturm - Basis	SL7-CB-100	EATON	91.063.058	1	/15.3
-H10.4	Maják - žlutý Lighthouse - yellow Leuchtturm - gelb	SL7-L-Y	EATON	91.063.059	1	/15.3
-H10.4	Žárovka 24V Lamp 24V Lampe 24V	SL7-L24	EATON	91.063.061	1	/15.3

The manufacturer reserves right to use an equivalent replacement device.

3.a

Kusovník artiklů / Parts list / Stückliste

Označení přístroje Device identification Geräteidentifikation	Typ přístroje Device description Gerätebeschreibung	Objednací číslo Type number Typennummer	Výrobce Manufacturer Hersteller	Skladové číslo Part number Lagernummer	Množství Quantity Menge	Umístění Location Stelle
-KM1	Ministykač - 4kW/400V, 3P Mini contactor - 4kW/400V, 3P Mini-Schütz - 4kW / 400V, 3P	B6S-30-01-1.7-71	ABB	91.040.049	1	/11.2
-KM2	Ministykač - 4kW/400V, 3P Mini contactor - 4kW/400V, 3P Mini-Schütz - 4kW / 400V, 3P	B6S-30-01-1.7-71	ABB	91.040.049	1	/11.4
-KM11	Stykač - 5,5kW/400V, 3P Contactor - 5,5kW/400V, 3P Schütz - 5,5kW / 400V, 3P	AF12-30-01-11	ABB	91.040.051	1	/14.7
-KM12	Stykač - 5,5kW/400V, 3P Contactor - 5,5kW/400V, 3P Schütz - 5,5kW / 400V, 3P	AF12-30-01-11	ABB	91.040.051	1	/14.8
-PA1	Pojistkový odpínač pro válcové vložky - 3P Switch fuse for the cylinder inserts - 3P Schalter Sicherung für den Zylindereinsätze - 3P	E 93/32	ABB	91.241.014	1	/7.1
-QS1	3 pólový odpínač, 25A Disconnector - 3P, 25A Trennschalter - 3P, 25A	OT25FT3	ABB	91.170.016	1	/6.0
-QS1	Kryt svorek Terminal shroud Klemmenabdeckung	OTS40T3	ABB	91.170.017	1	/6.0
-QS1	Rukojeť odpínače - černá Handle switch - black Griffschalter - schwarz	OHBS3RH	ABB	91.180.016	1	/6.0
-RP1	Svorka rychloupínací Fastconnect clamp Fast Connect Klemm	WAGO 224-112	WAGO	91.250.009	3	/7.4
-RP2	Svorka rychloupínací Fastconnect clamp Fast Connect Klemm	WAGO 224-112	WAGO	91.250.009	3	/13.3
-SA1	Upevňovací adaptér Mounting adapter Montageadapter	M22-A4	EATON	91.061.045	1	/9.6
-SA1	Kontaktní blok - 1NO Contact block - 1NO Kontaktblock - 1NO	M22-K10	EATON	91.061.022	3	/9.6

The manufacturer reserves right to use an equivalent replacement device.

3.b

Kusovník artiklů / Parts list / Stückliste

Označení přístroje Device identification Geräteidentifikation	Typ přístroje Device description Gerätebeschreibung	Objednací číslo Type number Typennummer	Výrobce Manufacturer Hersteller	Skladové číslo Part number Lagernummer	Množství Quantity Menge	Umístění Location Stelle
-SA2	Hlavice tlačítka - černá Head button - black Kopftaste - schwarz	M22-D-S	EATON	91.060.035	1	/15.1
-SA2	Upevňovací adaptér + 1NO Attaching adapter + 1NO Montageadapter + 1NO	M22-AK10	EATON	91.061.021	1	/15.1
-SB1	Total stop - hlavice + 3xNC Emergency-stop mushroom push - button + 3xNC Not-Aus-Pilz - Taster + 3 xNC	YW1B-V4E02R	IDEC	91.060.084	1	/14.2
-SB1	Kontakt - 1x NO Contact - 1x NO Kontakt - 1x NO	YW-E10	IDEC	91.061.044	1	/14.2
-SB2	Kontaktní blok - 1NO Contact block - 1NO Kontaktblock - 1NO	M22-K10	EATON	91.061.022	1	/9.1
-SB3	Kontaktní blok - 1NO Contact block - 1NO Kontaktblock - 1NO	M22-K10	EATON	91.061.022	1	/9.2
-SB4	Upevňovací adaptér Mounting adapter Montageadapter	M22-A	EATON	91.061.028	1	/9.2
-SB4	Kontaktní blok - 1NO Contact block - 1NO Kontaktblock - 1NO	M22-K10	EATON	91.061.022	1	/9.2
-SB4	Hlavice dvoutlačítka bílá/černá, zavřít/otevřít Double button head white/black, arrow close/open Doppelrundkopf weiß / schwarz, Pfeil Schließen / Öffnen	M22-DDL-WS-*	EATON	91.060.055	1	/9.2
-SB5	Kontaktní blok - 1NO Contact block - 1NO Kontaktblock - 1NO	M22-K10	EATON	91.061.022	1	/9.3
-SB6	Upevňovací adaptér Mounting adapter Montageadapter	M22-A	EATON	91.061.028	1	/9.4
-SB6	Hlavice dvoutlačítka bílá/černá šipka nahoru/dolů Double button head white/black, arrow up/down Doppelrundkopf weiß / schwarz, Pfeil nach oben / unten	M22-DDL-WS-*-*	EATON	91.060.054	1	/9.4

The manufacturer reserves right to use an equivalent replacement device.

3.c

Kusovník artiklů / Parts list / Stückliste

Označení přístroje Device identification Geräteidentifikation	Typ přístroje Device description Gerätebeschreibung	Objednací číslo Type number Typennummer	Výrobce Manufacturer Hersteller	Skladové číslo Part number Lagernummer	Množství Quantity Menge	Umístění Location Stelle
-SB6	Kontaktní blok - 1NO Contact block - 1NO Kontaktblock - 1NO	M22-K10	EATON	91.061.022	1	/9.4
-SB7	Kontaktní blok - 1NO Contact block - 1NO Kontaktblock - 1NO	M22-K10	EATON	91.061.022	1	/9.5
-SB8	Hlavice prosvětleného tlačítka modrá Blue transparent switch Blau transparent Schalter	M22-DL-B	EATON	91.060.132	1	/14.6
-TR1	Toroidní transformátor - 400V/230V/20V 4,5A 90VA Toroidal transformer - 400V / 230V / 20V 4,5A 90VA Ringkerntransformator - 400V / 230V / 20V 4,5A 90VA	400V/230V/20V 4,5A 90VA	KARBAN s.r.o.	91.080.023	1	/6.6
-SQ21	Bezpečnostní koncový spínač - 2xNC Safety Limit Switch - 2x NC Sicherheitsendschalter - 2x NC	QKS8	KEDU	91.173.012	1	/14.2
-SA1	Hlavice s otočným přepínačem - 4 polohy Head with rotary switch - 4 positions Kopf mit Drehschalter - 4 Positionen	M22 - WRK4	EATON	91.060.087	1	/9.6
-PA1	Pojistka válcová - 25A, 10x38, rychlá Tube fuse - 25A, 10x38, fast Rohrsicherung - 25A, 10x38, schnell	PV10 25A gG	OEZ	91.230.021	3	/7.1
-SQ2	Koncový spínač - 1NC+1NO Limit switch - 1NC+1NO Endschalter - 1NC+1NO	D4N-4A31	OMRON	91.173.007	1	/10.4
-SQ1	Koncový spínač - 1NC+1NO Limit switch - 1NC+1NO Endschalter - 1NC+1NO	D4N-4A31	OMRON	91.173.007	1	/10.3
-FM1	Frekvenční měnič - 3.7kW, 3x230VAC Frequency converter - 3.7kW, 3x230VAC Frequenzumrichter - 3.7 kW, 3x230VAC	VFD17AME23ANNAA	DELTA ELECTRONICS, INC.	91.012.196	1	/7.0
-M2	Čerpadlo chlazení 120W Cooling pump 120W Kühlpumpe 120W	PA70/120	SAP srl	91.020.032	1	/7.6
-+R10.4	PS 41x89x74mm - šedá PS 41x89x74mm - grey PS 41x89x74mm - grau	Z54	SOS Electronic, spol. s r.o.	91.190.036	1	/15.6

The manufacturer reserves right to use an equivalent replacement device.

3.d

Kusovník artiklů / Parts list / Stückliste

Označení přístroje Device identification Geräteidentifikation	Typ přístroje Device description Gerätebeschreibung	Objednací číslo Type number Typennummer	Výrobce Manufacturer Hersteller	Skladové číslo Part number Lagernummer	Množství Quantity Menge	Umístění Location Stelle
-CU1	Konektor Connector Stecker	SHM10-5,08	EUROCLAMP	91.144.030	6	/8.0
-CU1	Konektor Connector Stecker	SHM02-5,08	EUROCLAMP	91.144.032	1	/8.0
-+R10.4	Svorka Clamp Klemmen	WAGO.260-301	WAGO	91.250.008	1	/15.6
-+R10.4	Koncová bočnice End side Endseite	WAGO.260-361	WAGO	91.252.003	1	/15.6
-+RSN	Svorka Clamp Klemmen	WAGO.260-301	WAGO	91.250.008	5	/13.6
-+RSN	Koncová bočnice End side Endseite	WAGO.260-361	WAGO	91.252.003	1	/13.6
-FU3	Svorka pojistková Fuse terminal Sicherungsklemme	WK4/THSi5U	WIELAND	91.251.102	1	/6.8
-M4	Ventilátor 24VDC, 154CFM Fan 24VDC, 154CFM Fan 24VDC, 154CFM	RDH1238 B2	Xinruilian Electronic Co.	91.015.126	1	/11.7

The manufacturer reserves right to use an equivalent replacement device.

3.e

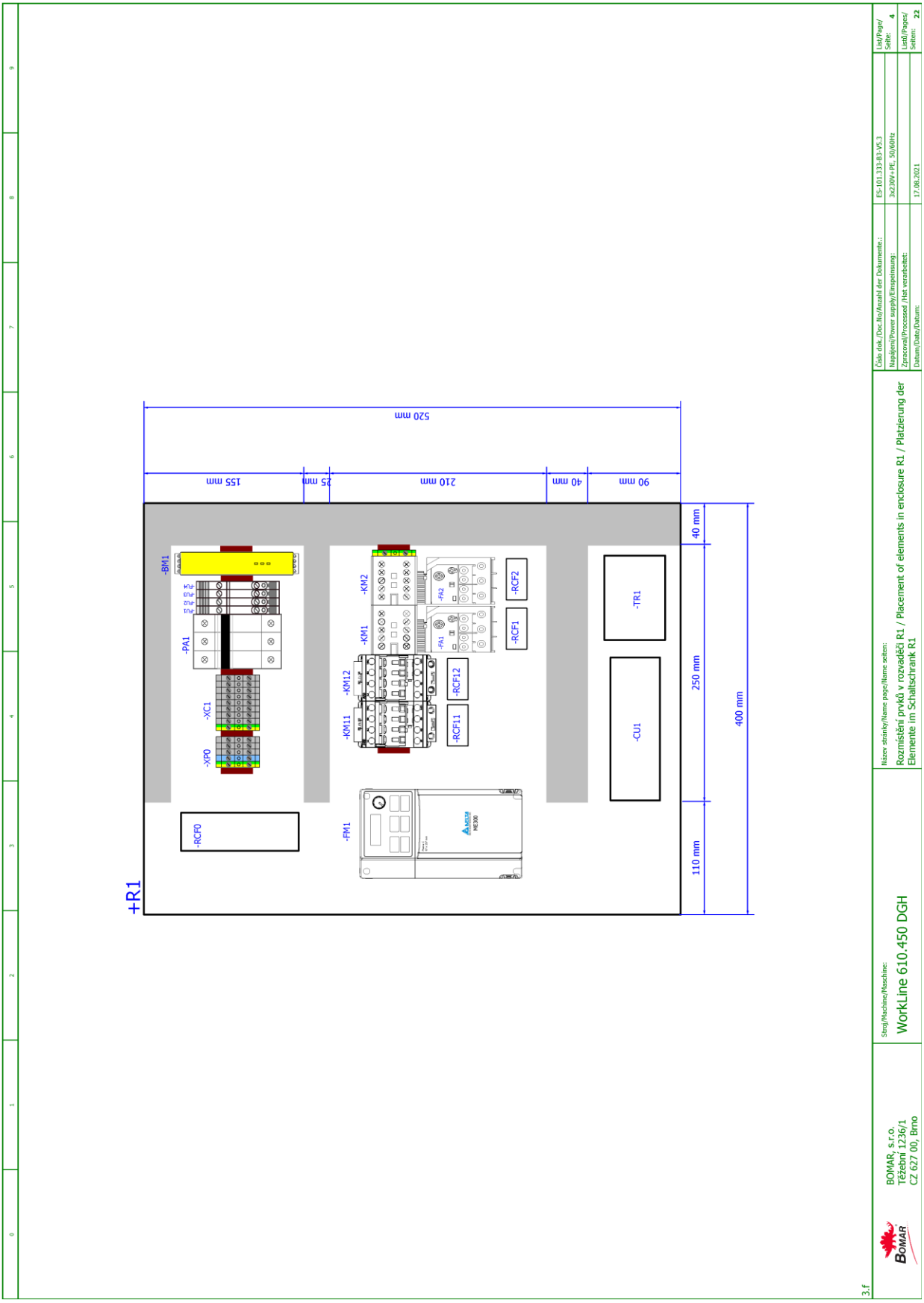
+R1
-RCF0
-PA1
-BM1
-XC1
-XP0
-FM1
-KM11
-KM12
-KM1
-KM2
-FA1
-FA2
-RCF11
-RCF12
-RCF1
-RCF2
-CU1
-TR1
520 mm
155 mm
25 mm
210 mm
40 mm
90 mm
400 mm
250 mm
110 mm
40 mm
Číslo dok./Doc.No/Anzahl der Dokumente.:
ES-101.333-B3-V5.3
Napájení/Power supply/Einspeisung:
3x230V+PE, 50/60Hz
Zpracoval/Processed /Hat verarbeitet:
Datum/Date/Datum:
17.08.2021
List/Page/Seite: 4
List/Pages/Seiten: 22
Název stránky/Name page/Name seiten:
Rozmístění prvků v rozváděči R1 / Placement of elements in enclosure R1 / Platzierung der Elemente im Schaltschrank R1
Stroj/Machine/Maschine:
WorkLine 610.450 DGH
BOMAR, s.r.o.
Těžební 1236/1
CZ 627 00, Brno
3.f

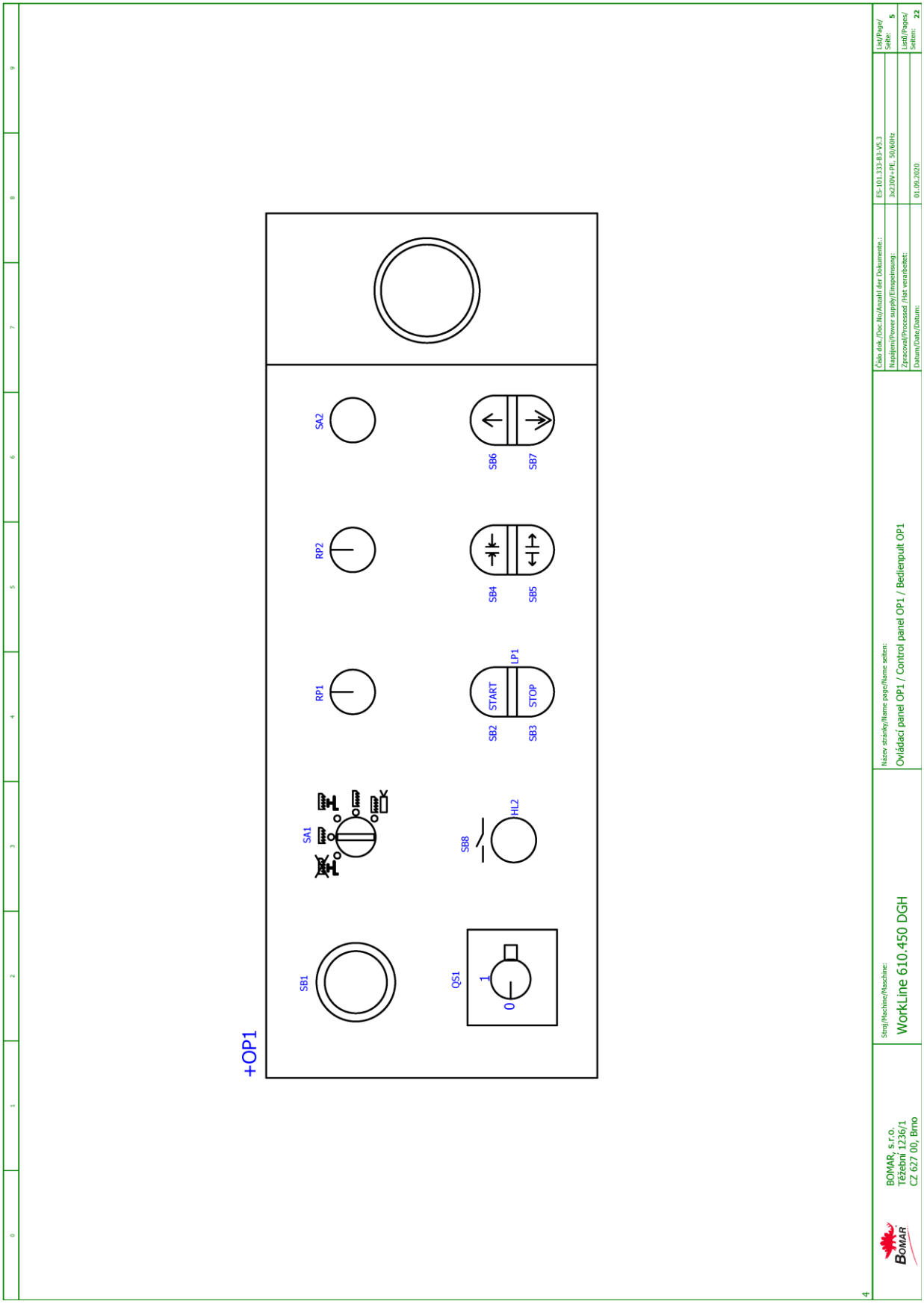
+OP1
SB1
QS1
1
0
SA1
SB8
HL2
RP1
SB2
START
LP1
SB3
STOP
RP2
SB4
SB5
SA2
SB6
SB7
Číslo dok./Doc.No/Anzahl der Dokumente.:
ES-101.333-B3-V5.3
Napájení/Power supply/Einspeisung:
3x230V+PE, 50/60Hz
Zpracoval/Processed /Hat verarbeitet:
Datum/Date/Datum:
01.09.2020
List/Page/Seite:
5
List0/Pages/Seiten:
22
Název stránky/Name page/Name seiten:
Ovládací panel OP1 / Control panel OP1 / Bedienpult OP1
Stroj/Machine/Maschine:
WorkLine 610.450 DGH
BOMAR, s.r.o.
Těžební 1236/1
CZ 627 00, Brno
BOMAR
4

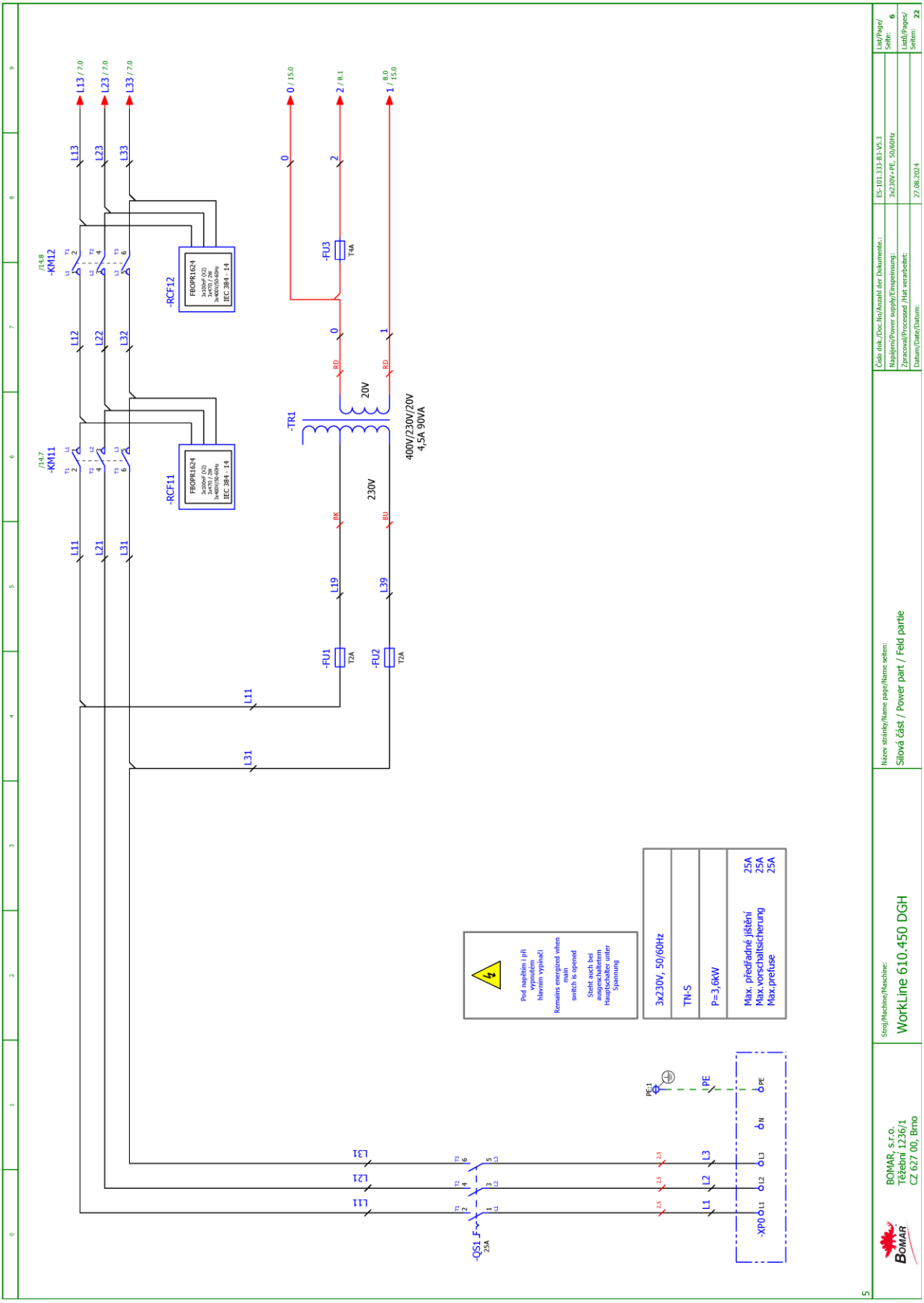
/147
-KM11
/148
-KM12
-RCF11
-RCF12
FBDPR1624
IEC 384 - 14
-TR1
400V/230V/20V
4,5A 90VA
230V
20V
-FU1
-FU2
-FU3
T2A
T4A
-QS1
25A
-XP0
PE
Pod napětím i při vypnutém hlavním vypínači
Remains energized when main switch is opened
Steht auch bei ausgeschaltetem Hauptschalter unter Spannung
3x230V, 50/60Hz
TN-S
P=3,6kW
Max. předřadné jištění 25A
Max.vorschaltsicherung 25A
Max.preiuse 25A
Číslo dok./Doc.No/Anzahl der Dokumente.: ES-101.333-B3-V5.3
Napájení/Power supply/Einspeisung: 3x230V+PE, 50/60Hz
Zpracoval/Processed /Hat verarbeitet:
Datum/Date/Datum: 27.08.2024
List/Page/Seite: 6
List/Pages/Seiten: 22
Název stránky/Name page/Name seiten:
Silová část / Power part / Feld partie
Stroj/Machine/Maschine:
WorkLine 610.450 DGH
BOMAR, s.r.o.
Těžební 1236/1
CZ 627 00, Brno

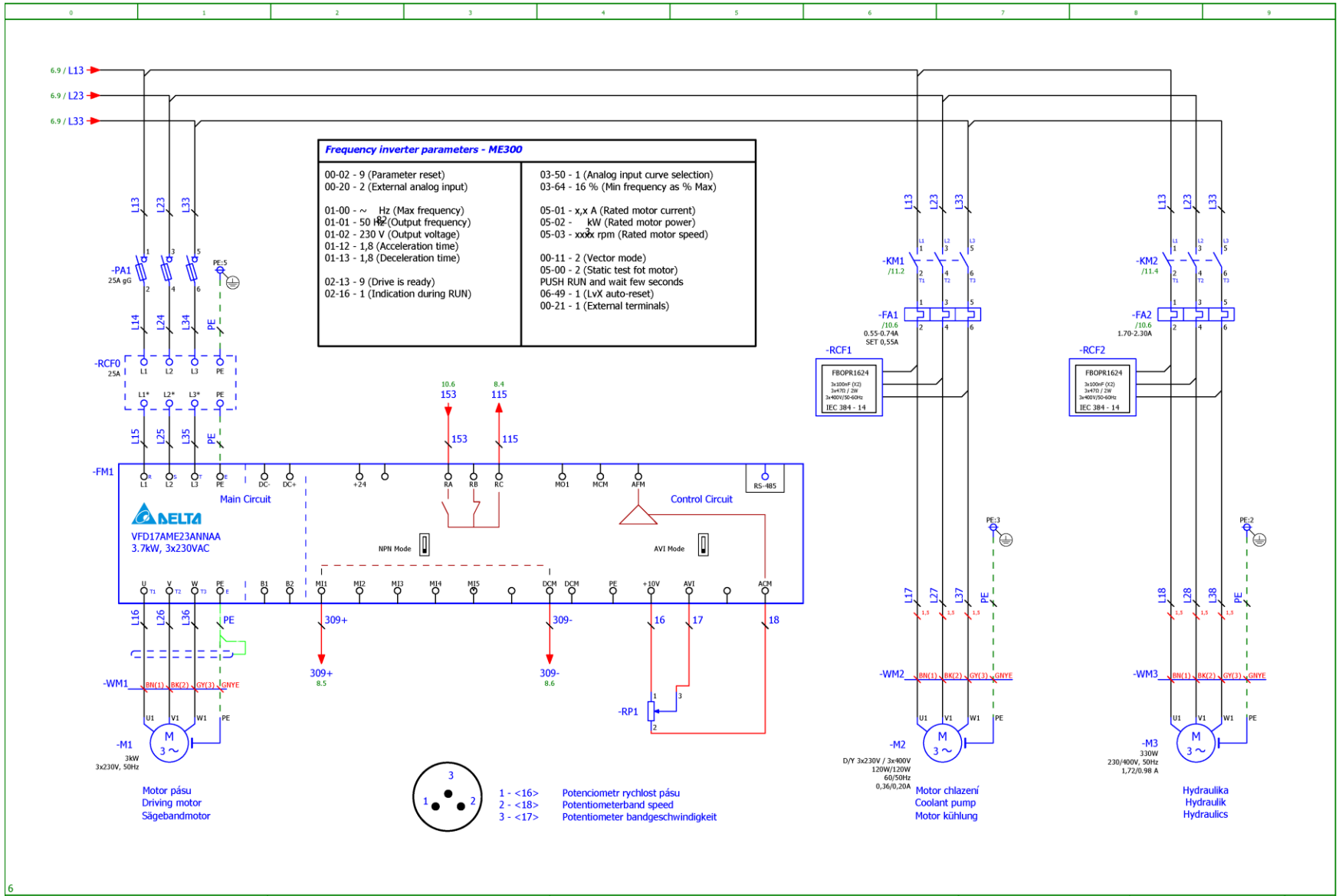

Schémata
Schemas
Schematics

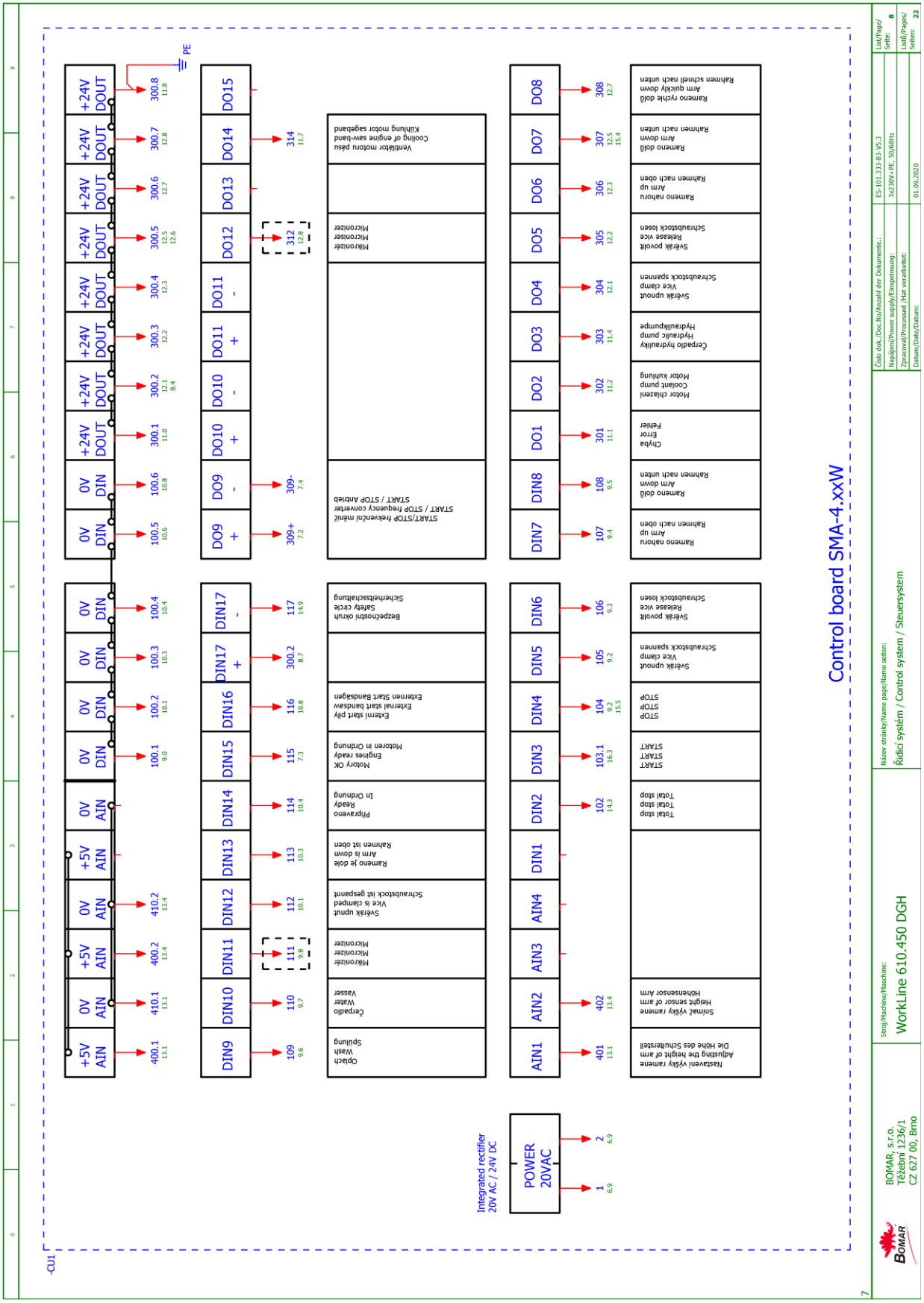
Control board SMA-4.xxW
-CU1
+5V AIN
0V AIN
0V DIN
+24V DOUT
DIN9
DIN10
DIN11
DIN12
DIN13
DIN14
DIN15
DIN16
DIN17
DO9
DO10
DO11
DO12
DO13
DO14
DO15
AIN1
AIN2
AIN3
AIN4
DIN1
DIN2
DIN3
DIN4
DIN5
DIN6
DIN7
DIN8
DO1
DO2
DO3
DO4
DO5
DO6
DO7
DO8
POWER 20VAC
Integrated rectifier 20V AC / 24V DC
PE
Čerpadlo Wasser Vasser
Mikronizér Micronizer Micronizer
Svěrák upnut Vice is clamped Schraubstock ist gespannt
Ramenо je dole Arm is down Rámen ist oben
Připraveno Ready In Ordnung
Motory OK Engines ready Motoren in Ordnung
Externí start pily External saw start Externen Start Bandsägen
Bezpečnostní okruh Safety circle Sicherheitskreis
Motor chladení Coolant pump Motor kühlung
Čerpadlo hydrauliky Hydraulic pump Hydraulikpumpe
Chyba Error Fehler
Ramено dolů Arm down Rahmen nach unten
Ramено nahoru Arm up Rahmen nach oben
Svěrák povolit Release vice Schraubstock lösen
Svěrák upnout Vice clamp Schraubstock spannen
Ventilátor motoru pásu Cooling of engine saw-band Kühlung motor sageband
Mikronizér Micronizer
START/STOP frekvenční měnič START / STOP frequency converter START / STOP Antrieb
Snímač výšky ramene Height sensor of arm Höhensensor Arm
Nastavení výšky ramene Adjusting the height of arm Die Höhe des Schultersteil
Total stop Total stop Total stop
START START START
STOP STOP STOP
Číslo dok./Doc.No/Anzahl der Dokumente.: ES-101.333-83-V5.3
Napájení/Power supply/Einspeisung: 3x230V+PE, 50/60Hz
Zpracoval/Processed /Hat verarbeitet:
Datum/Date/Datum: 01.09.2020
List/Page/Seite: 8
List/Pages/Seiten: 22
Název stránky/Name page/Name seiten:
Řídící systém / Control system / Steuersystem
Stroj/Machine/Maschine:
WorkLine 610.450 DGH
BOMAR, s.r.o.
Těžební 1236/1
CZ 627 00, Brno

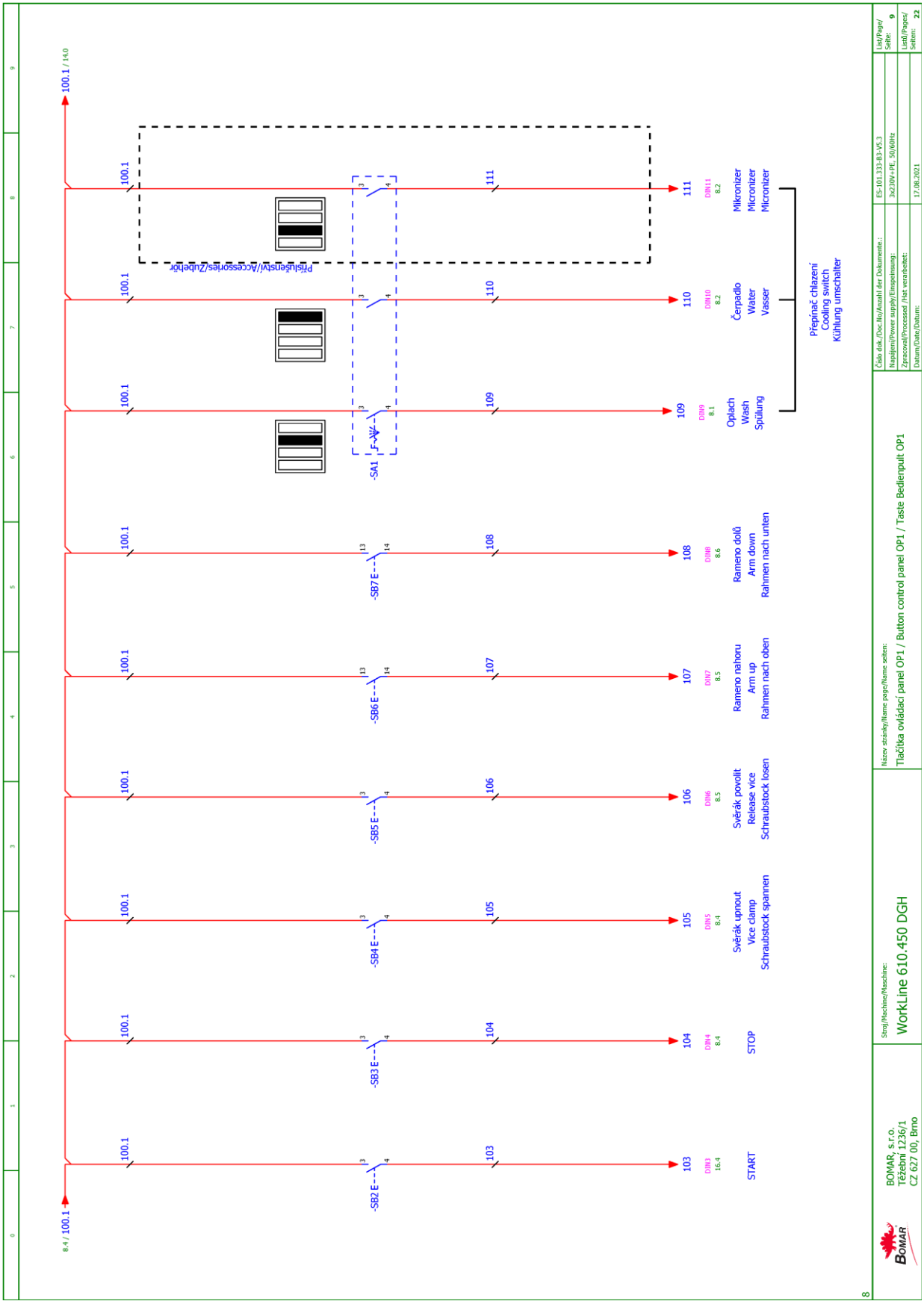
8.4 / 100.1
100.1 / 14.0
100.1
-SB2 E
-SB3 E
-SB4 E
-SB5 E
-SB6 E
-SB7 E
-SA1
103
104
105
106
107
108
109
110
111
DIN3 16.4
DIN4 8.4
DIN5 8.4
DIN6 8.5
DIN7 8.5
DIN8 8.6
DIN9 8.1
DIN10 8.2
DIN11 8.2
START
STOP
Svěrák upnout
Vice clamp
Schraubstock spannen
Svěrák povolit
Release vice
Schraubstock losen
Rameno nahoru
Arm up
Rahmen nach oben
Rameno dolů
Arm down
Rahmen nach unten
Oplach
Wash
Spülung
Čerpadlo
Water
Vasser
Mikronizer
Micronizer
Micronizer
Přepínač chlazení
Cooling switch
Kühlung umschalter
Příslušenství/Accessories/Zubehör
BOMAR, s.r.o.
Těžební 1236/1
CZ 627 00, Brno
Stroj/Machine/Maschine:
WorkLine 610.450 DGH
Název stránky/Name page/Name seiten:
Tlačítka ovládací panel OP1 / Button control panel OP1 / Taste Bedienpult OP1
Číslo dok./Doc.No/Anzahl der Dokumente:
ES-101.333-B3-VS.3
Napájení/Power supply/Einspeisung:
3x230V+PE, 50/60Hz
Zpracová/Processed /Hat verarbeitet:
Datum/Date/Datum:
17.08.2021
List/Page/Seite: 9
List0/Pages/Seiten: 22

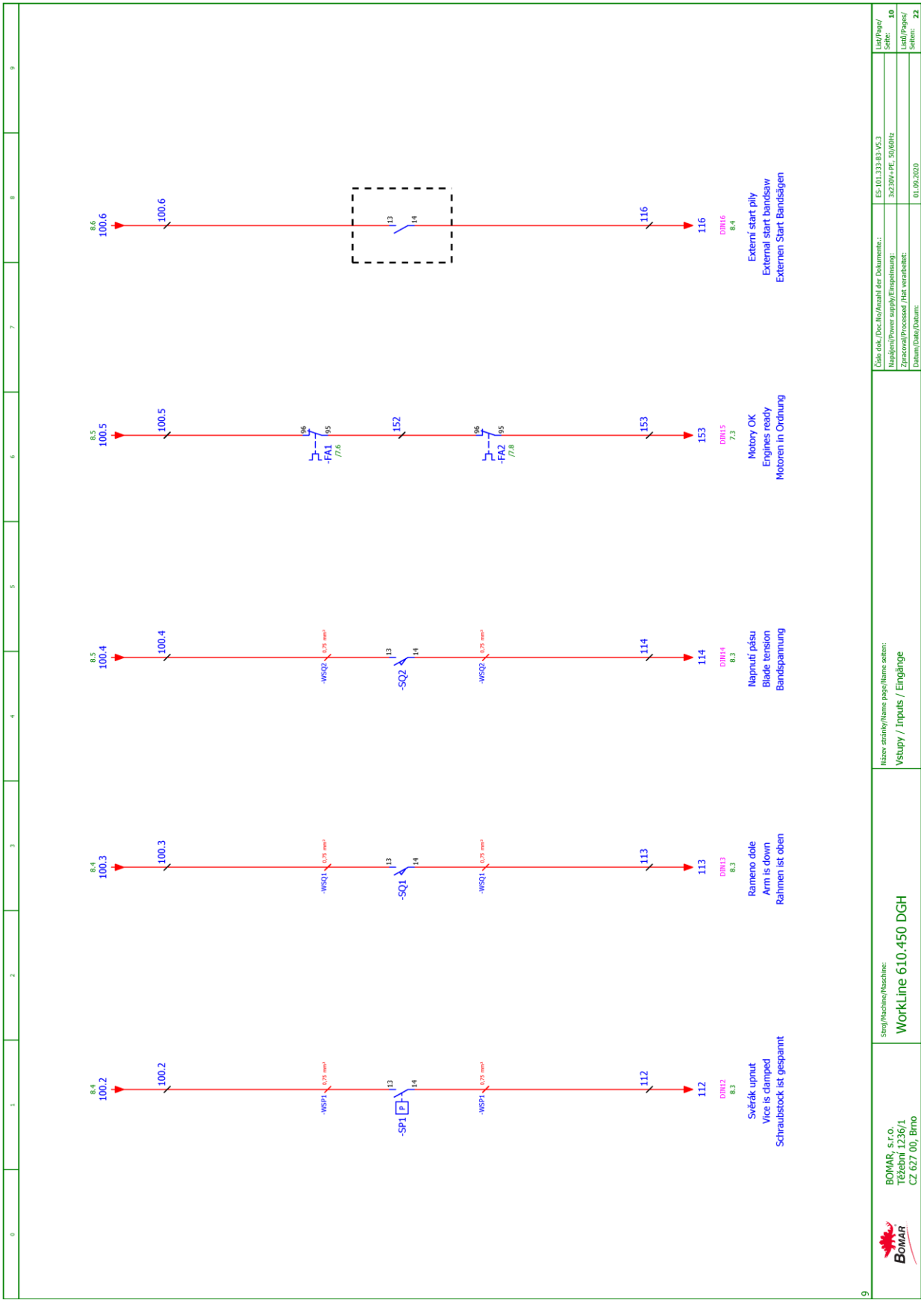
8.4
100.2
100.2
-WSP1
0,75 mm²
-SP1
13
14
112
112
DIN12
8.3
Svěrák upnut
Vice is clamped
Schraubstock ist gespannt
8.4
100.3
100.3
-WSQ1
0,75 mm²
-SQ1
13
14
113
113
DIN13
8.3
Rameno dole
Arm is down
Rahmen ist oben
8.5
100.4
100.4
-WSQ2
0,75 mm²
-SQ2
13
14
114
114
DIN14
8.3
Napnutí pásu
Blade tension
Bandspannung
8.5
100.5
100.5
96
95
-FA1
/7.6
152
96
95
-FA2
/7.8
153
153
DIN15
7.3
Motory OK
Engines ready
Motoren in Ordnung
8.6
100.6
100.6
13
14
116
116
DIN16
8.4
Externí start pily
External start bandsaw
Externen Start Bandsägen
BOMAR, s.r.o.
Těžební 1236/1
CZ 627 00, Brno
Stroj/Machine/Maschine:
WorkLine 610.450 DGH
Název stránky/Name page/Name seiten:
Vstupy / Inputs / Eingänge
Číslo dok./Doc.No/Anzahl der Dokumente.:
ES-101.133-B3-V5.3
Napájení/Power supply/Einspeisung:
3x230V+PE, 50/60Hz
Zpracoval/Processed /Hat verarbeitet:
Datum/Date/Datum:
01.09.2020
List/Page/
Seite:
10
List/Pages/
Seiten:
22

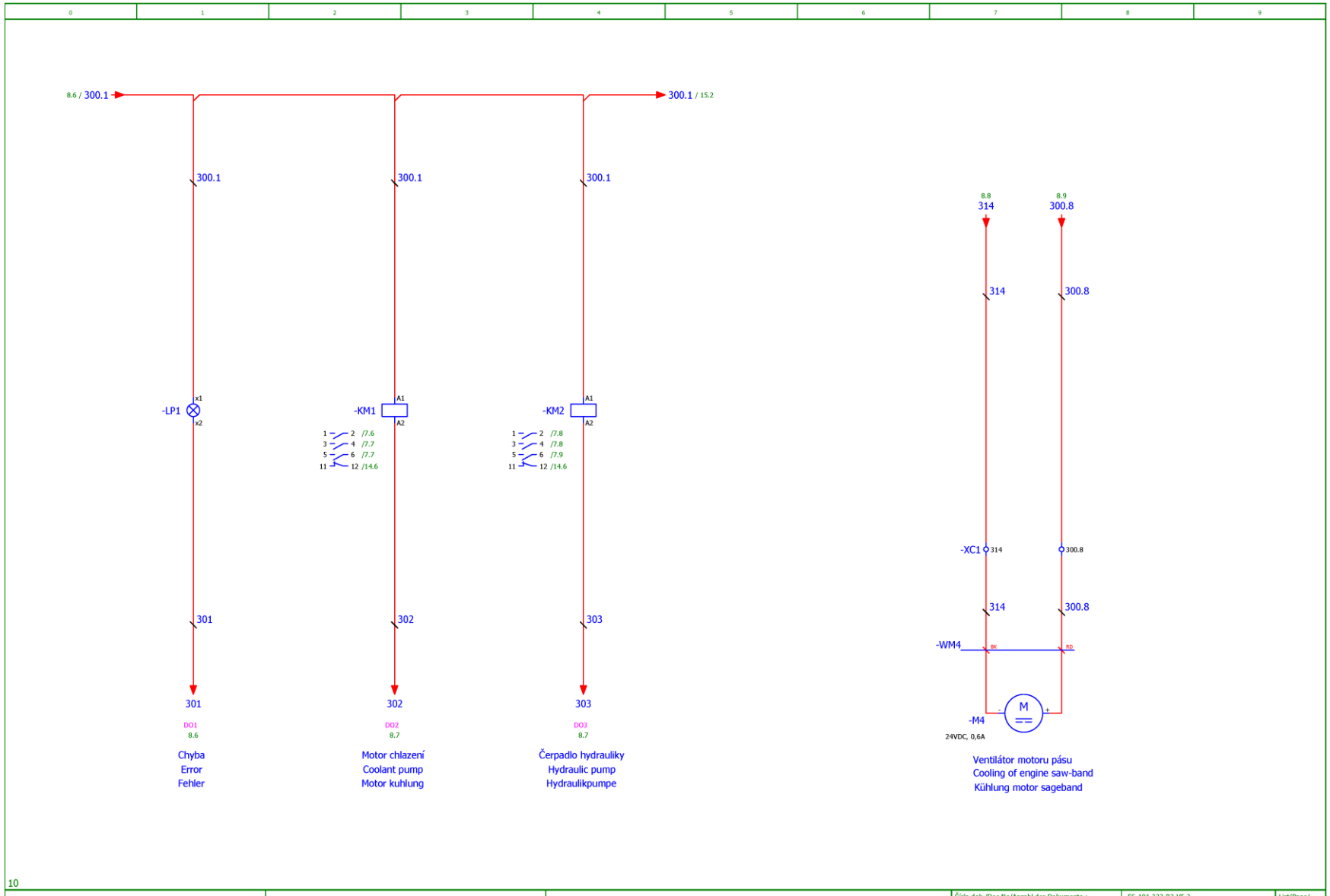

Schémata
Schemas
Schematics

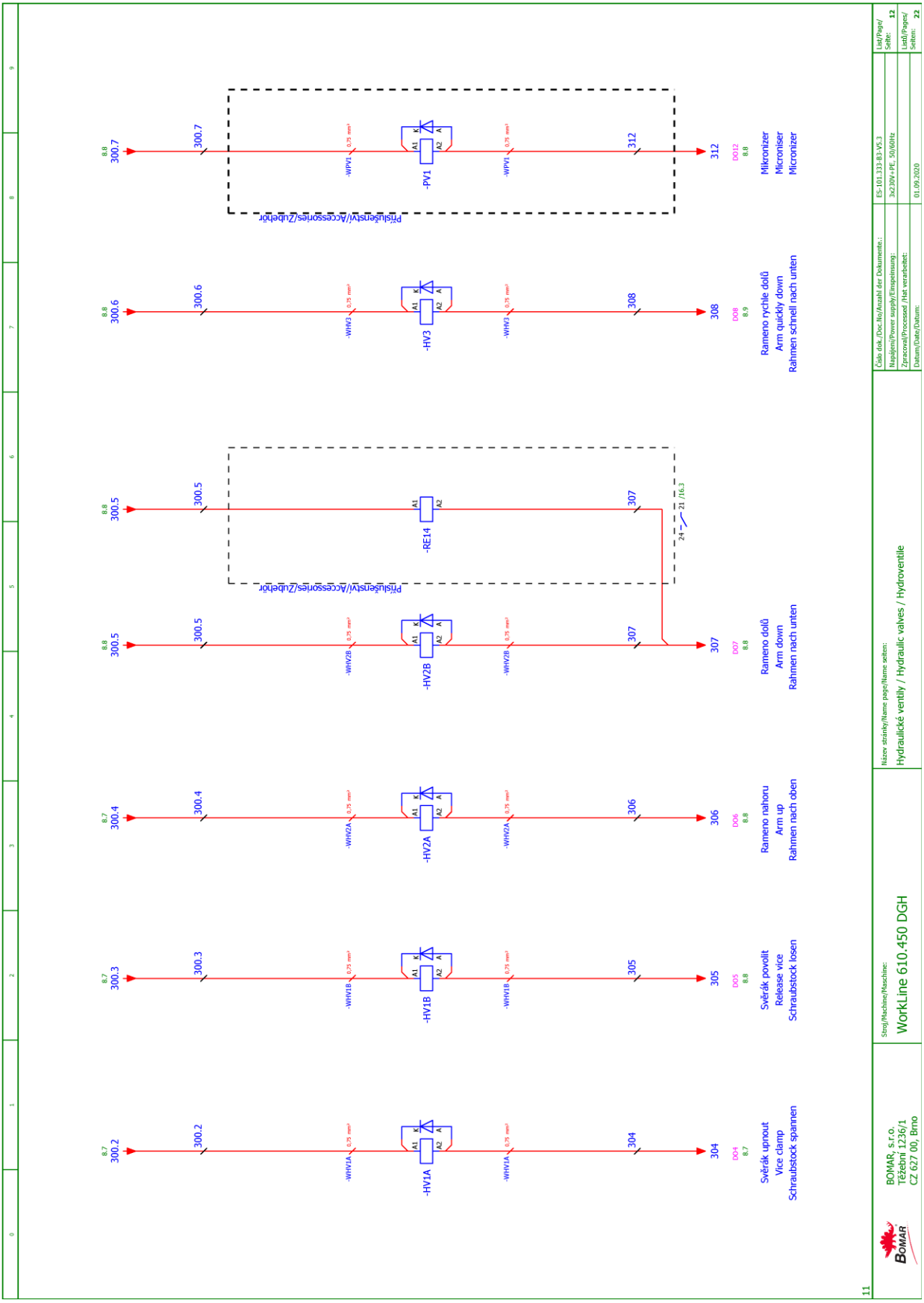
300.2
-HV1A
Svěrák upnout
Vice clamp
Schraubstock spannen
300.3
-HV1B
Svěrák povolit
Release vice
Schraubstock losen
300.4
-HV2A
Rameno nahoru
Arm up
Rahmen nach oben
300.5
-HV2B
Rameno dolů
Arm down
Rahmen nach unten
-RE14
Příslušenství/Accessories/Zubehör
300.6
-HV3
Rameno rychle dolů
Arm quickly down
Rahmen schnell nach unten
300.7
-PV1
Mikronizer
Microniser
Micronizer
BOMAR, s.r.o.
Těžební 1236/1
CZ 627 00, Brno
Stroj/Machine/Maschine:
WorkLine 610.450 DGH
Názvy stránky/Name page/Name seiten:
Hydraulické ventily / Hydraulic valves / Hydroventile
ES-101.333-B3-V5.3
3x230V+PE, 50/60Hz
01.09.2020
List/Page/Seite: 12
List/Pages/Seiten: 22

Nastavení rychlosti pilového pásu
Setting the saw belt speed
Einstellen des Sägebandgeschwindigkeit

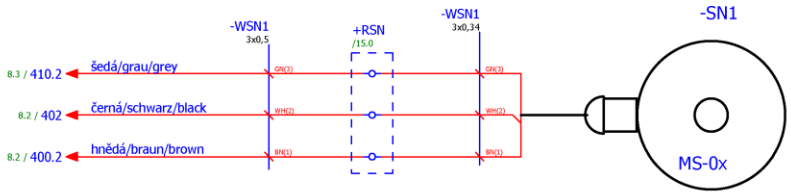

Snímač výšky ramene
Arm height sensor
Arm Höhensensor

12

BOMAR, s.r.o. Těžební 1236/1 CZ 627 00, Brno	Stroj/Machine/Maschine: WorkLine 610.450 DGH	Název stránky/Name page/Name seiten: Snímač výšky ramene - rychlost pilového pásu / Height sensor arm - speed band saw / Höhensensor Arm - Drehzahl Bandsäge	Číslo dok./Doc.No/Anzahl der Dokumente.: ES-101.333-B3-V5.3 Napájení/Power supply/Einspeinsung: 3x230V+PE, 50/60Hz Zpracoval/Processed /Hat verarbeitet: Datum/Date/Datum: 17.08.2021	List/Page/Seite: 13 Listů/Pages/Seiten: 22

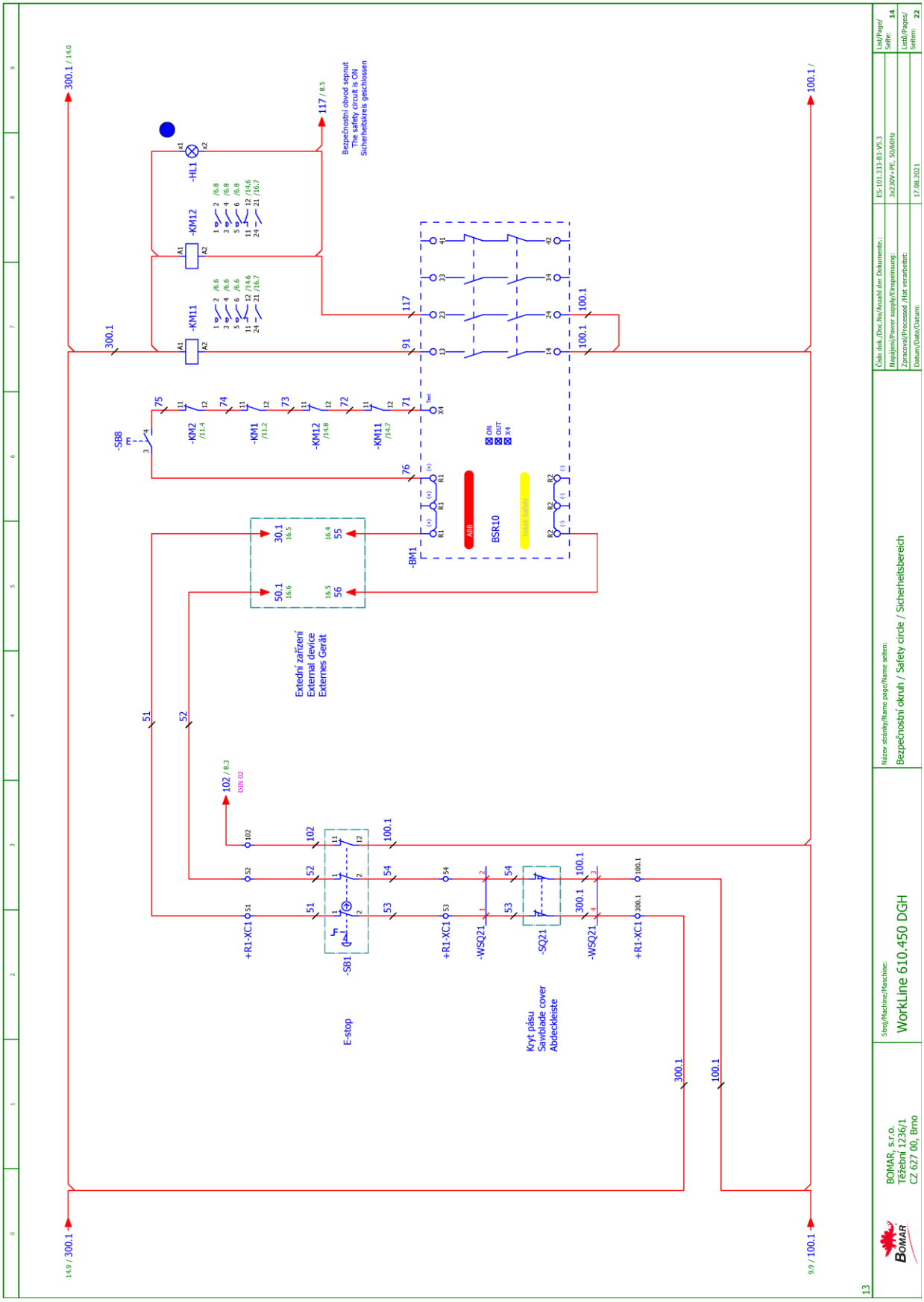
Bezpečnostní obvod sepnut
The safety circuit is ON
Sicherheitskreis geschlossen
Extedíní zařízení
External device
Externes Gerät
E-stop
Kryt pásu
Sawblade cover
Abdeckleiste
BSR10
AUB
Stroj/Machine/Maschine:
WorkLine 610.450 DGH
Název stránky/Name page/Name seiten:
Bezpečnostní okruh / Safety circle / Sicherheitsbereich
BOMAR, s.r.o.
Těžební 1236/1
CZ 627 00, Brno
ES-101.333-B3-V5.3
3x230V+PE, 50/60Hz
17.08.2021

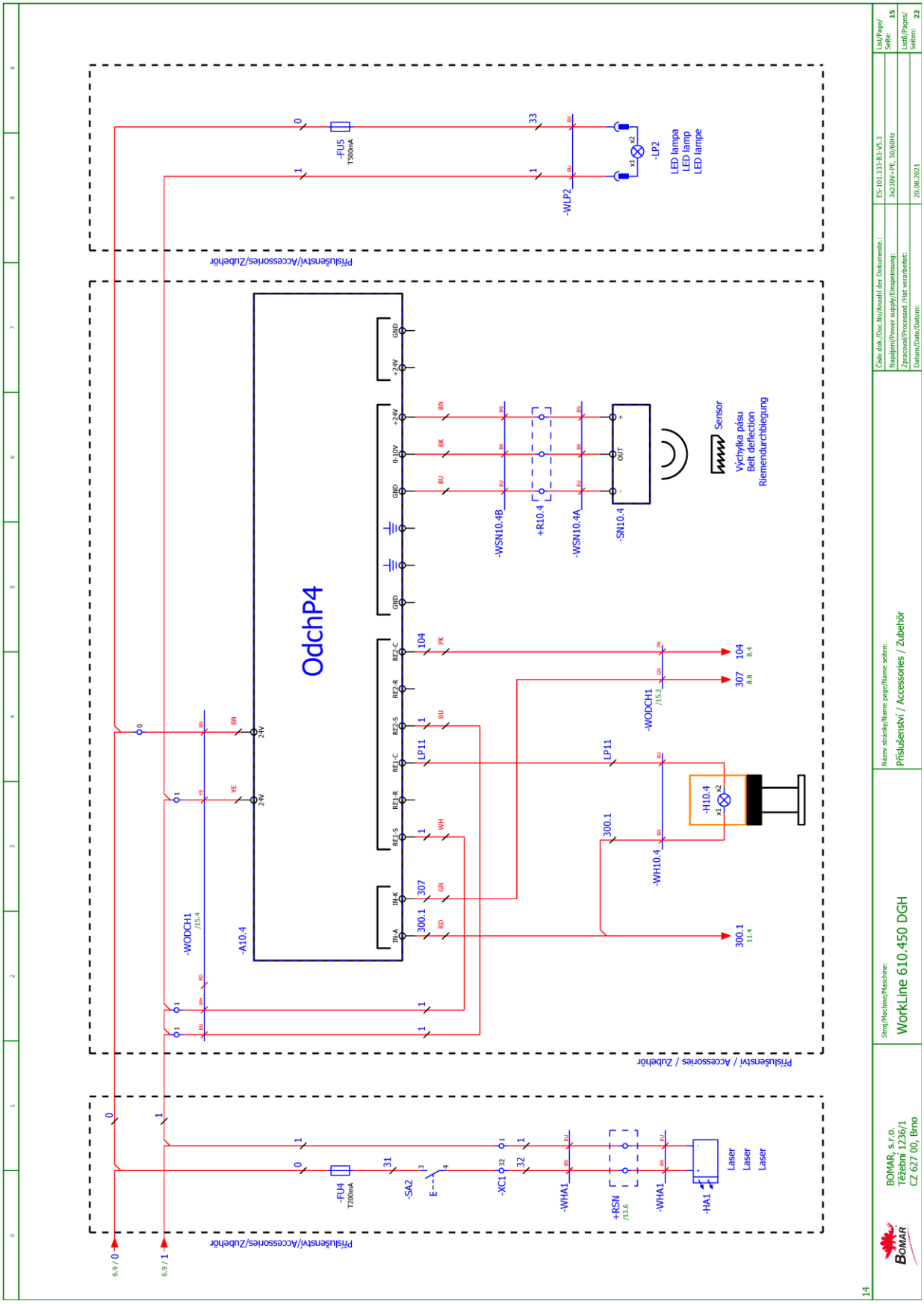
OdchP4
-A10.4
-FU5
T500mA
-LP2
LED lampa
LED lamp
LED lampe
-WLP2
Příslušenství/Accessories/Zubehör
-WODCH1
-WSN10.4B
+R10.4
-WSN10.4A
-SN10.4
Sensor
Výchylka pásu
Belt deflection
Riemendurchbiegung
-H10.4
-WH10.4
-FU4
T200mA
-SA2
-XC1
-WHA1
+RSN
-HA1
Laser
Příslušenství / Accessories / Zubehör
Číslo dok./Doc.No/Anzahl der Dokumente:
ES-101.333-B3-V5.3
Napájení/Power supply/Einspeisung:
3x230V+PE, 50/60Hz
Zpracoval/Processed /Hat verarbeitet:
Datum/Date/Datum:
20.08.2021
List/Page/Seite: 15
List0/Pages/Seiten: 22
Název stránky/Name page/Name seiten:
Příslušenství / Accessories / Zubehör
Stroj/Machine/Maschine:
WorkLine 610.450 DGH
BOMAR, s.r.o.
Těžební 1236/1
CZ 627 00, Brno

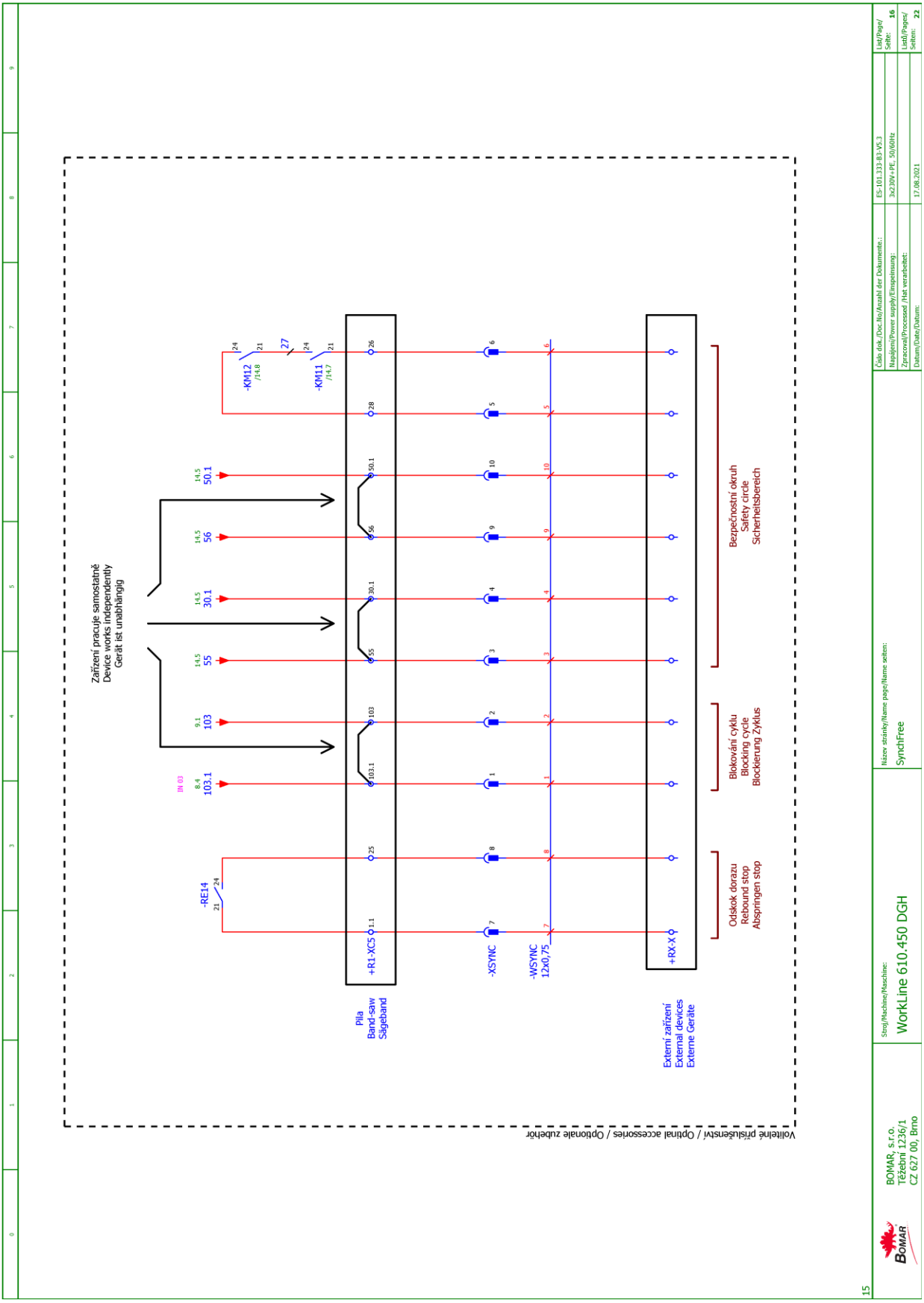
Zařízení pracuje samostatně
Device works independently
Gerät ist unabhängig
-RE14
8.4
103.1
IN 03
8.1
103
14.5
55
14.5
30.1
14.5
56
14.5
50.1
-KM12
/14.8
27
-KM11
/14.7
+R1-XC5
Pila
Band-saw
Sägeband
-XSYNC
-WSYNC
12x0,75
+RX-X
Externí zařízení
External devices
Externe Geräte
Odskok dorazu
Rebound stop
Abspringen stop
Blokování cyklu
Blocking cycle
Blockierung Zyklus
Bezpečnostní okruh
Safety circle
Sicherheitsbereich
Volitelné příslušenství / Optional accessories / Optionale zubehör
Číslo dok./Doc.No/Anzahl der Dokumente.:
ES-101.333-B3-V5.3
Napájení/Power supply/Einspeisung:
3x230V+PE, 50/60Hz
Zpracoval/Processed /Hat verarbeitet:
Datum/Date/Datum:
17.08.2021
List/Page/
Seite:
16
List0/Pages/
Seiten:
22
Název stránky/Name page/Name seiten:
SynchFree
Stroj/Machine/Maschine:
WorkLine 610.450 DGH
BOMAR, s.r.o.
Těžební 1236/1
CZ 627 00, Brno
15

3x230V+PE, 50/60 Hz

Obsah / Table of contents / Inhalt

Strana Page Seite	Název strany Page name Seitenname	Datum Date Datum
/1	Úvodní strana / Start page / Startseite	27.08.2024
/2	Obsah / Table of contents / Inhaltsverzeichnis	27.08.2024
/3	Kusovník artiklů / Parts list / Artikelstückliste	17.08.2021
/3.a	Kusovník artiklů / Parts list / Artikelstückliste	17.08.2021
/3.b	Kusovník artiklů / Parts list / Artikelstückliste	27.08.2024
/3.c	Kusovník artiklů / Parts list / Artikelstückliste	17.08.2021
/3.d	Kusovník artiklů / Parts list / Artikelstückliste	17.08.2021
/3.e	Kusovník artiklů / Parts list / Artikelstückliste	17.08.2021
/3.f	Kusovník artiklů / Parts list / Artikelstückliste	17.08.2021
/3.g	Kusovník artiklů / Parts list / Artikelstückliste	17.08.2021
/4	Rozmístění prvků v rozvaděči R1 / Placement of elements in enclosure R1 / Platzierung der Elemente im Schaltschrank R1	23.08.2021
/5	Ovládací panel OP1 / Control panel OP1 / Bedienpult OP1	01.09.2020
/6	Silová část / Power part / Feld partie	27.08.2024
/7	Silová část M1, M2, M3 / Power part M1, M2, M3 / Feld partie M1, M2, M3	27.08.2024
/8	Řidicí systém / Control system / Steuersystem	31.03.2021
/9	Tlačítka ovládací panel OP1 / Button control panel OP1 / Taste Bedienpult OP1	17.08.2021
/10	Vstupy / Inputs / Eingänge	13.01.2021
/11	Stýkače, M4 / Contactors, M4 / Schütze, M4	12.01.2021
/12	Hydraulické ventily / Hydraulic valves / Hydroventile	01.09.2020
/13	Snímač výšky ramene - rychlost pilového pásu / Height sensor arm - speed band saw / Höhensensor Arm - Drehzahl Bandsäge	17.08.2021
/14	Bezpečnostní okruh / Safety circle / Sicherheitsbereich	17.08.2021
/15	Příslušenství / Accessories / Zubehör	17.08.2021
/16	SynchFree	17.08.2021

Kusovník artiklů / Parts list / Stückliste

Označení přístroje Device identification Geräteidentifikation	Typ přístroje Device description Gerätebeschreibung	Objednací číslo Type number Typennummer	Výrobce Manufacturer Hersteller	Skladové číslo Part number Lagernummer	Množství Quantity Menge	Umístění Location Stelle
-+RSN	Rozváděčová krabice Switchboard box Schaltschrank	30.M204-301	Bomar	30.M204-301	1	/13.6
-BM1	Bezpečnostní relé 24VDC, 3NO/1NC Safety relay 24VDC, 3NO/1NC Sicherheitsrelais 24VDC, 3NO/1NC	ABB.2TLA010040R0000	ABB	91.051.076	1	/14.5
-SN10.4	Indukční snímač vzdálenosti Inductive proximity sensor Induktive Näherungssensor	BAW R06AC-UAF20B-EP03	BALLUFF	91.172.016	1	/15.6
-A10.4	Odchylka pásu Band deviation Bandabweichung	BDM2	BOMAR s.r.o.	266.254	1	/15.2
-CU1	Řídící systém SMA 4.X Control unit SMA 4.X Die Steuereinheit SMA 4.X	SMA 4.02	BOMAR s.r.o.	91.995.223	1	/8.0
-SN1	Odměřovaní polohy Position measuring Positionsmessung	DH-RAM	Bomar	262.012	1	/13.8
-LP1	Signálka LED červená na adaptér Red LED light for adapter Red LED-Licht für Adapter	M22-LED-R	EATON	91.061.027	1	/11.1
-SB2	Hlavice dvoutlačítka bílá/černá start/stop Double button head white/black start/stop Doppelrundkopf weiß/schwarz Start/Stopp	M22-DDL-WS-GB1/GB0	EATON	91.060.034	1	/9.1
-SB2	Upevňovací adaptér Mounting adapter Montageadapter	M22-A	EATON	91.061.028	1	/9.1
-FU3	Pojistka trubičková - 4A/250V, pomalá, 5x20 Tube fuse - 4A/250V, slow, 5x20 Rohrsicherung - 4A / 250V, langsam, 5x20	T4A/250V	ESKA	91.230.015	1	/6.8
-FU5	Pojistka trubičková - 500mA/250V, pomalá, 5x20 Tube fuse - 500mA/250V, slow, 5x20 Rohrsicherung - 500 mA / 250 V, langsam, 5x20	T500mA/250V	ESKA	91.230.011	1	/15.9
-RP1	Potenciometr 4k7 Potenciometer 4k7 Potentiometer 4k7	TP195 4k7/N20A	Elektronické součástky CZ, a.s	91.283.015	1	/7.4

The manufacturer reserves right to use an equivalent replacement device.

2

Kusovník artiklů / Parts list / Stückliste

Označení přístroje Device identification Geräteidentifikation	Typ přístroje Device description Gerätebeschreibung	Objednací číslo Type number Typennummer	Výrobce Manufacturer Hersteller	Skladové číslo Part number Lagernummer	Množství Quantity Menge	Umístění Location Stelle
-HV1A	Ventilový konektor, LED Valve Plug, LED Ventilanschluss, LED	VCAFA0322-LED	Finecables Co.,Ltd.	93.017.077	1	/12.1
-HV1B	Ventilový konektor, LED Valve Plug, LED Ventilanschluss, LED	VCAFA0322-LED	Finecables Co.,Ltd.	93.017.077	1	/12.2
-HV2A	Ventilový konektor, LED Valve Plug, LED Ventilanschluss, LED	VCAFA0322-LED	Finecables Co.,Ltd.	93.017.077	1	/12.3
-HV2B	Ventilový konektor, LED Valve Plug, LED Ventilanschluss, LED	VCAFA0322-LED	Finecables Co.,Ltd.	93.017.077	1	/12.5
-HV3	Ventilový konektor, LED Valve Plug, LED Ventilanschluss, LED	VCAFA0322-LED	Finecables Co.,Ltd.	93.017.077	1	/12.7
-PV1	Ventilový konektor, LED Valve Plug, LED Ventilanschluss, LED	VCAFA0322-LED	Finecables Co.,Ltd.	93.017.077	1	/12.8
-RP1	Hlavice potenciometru - 24mm Head of potentiometer 24mm Leiter Potentiometer 24mm	S8877 BLK	GES-ELECTRONICS, a.s.	91.060.063	1	/7.4
-RP2	Hlavice potenciometru - 24mm Head of potentiometer 24mm Leiter Potentiometer 24mm	S8877 BLK	GES-ELECTRONICS, a.s.	91.060.063	1	/13.3
-RP2	Potenciometr 4k7 Potenciometer 4k7 Potentiometer 4k7	TP195 4k7/N20A	Elektronické součástky CZ, a.s	91.283.015	1	/13.3
-RCF0	RFC-filtr - 5.5 kW, 3x400V/230V, 25A RFC-filter - 5.5 kW, 3x400V/230V, 25A RFC-filter - 5.5 kW, 3x400V/230V, 25A	ATV31/5,5KW	Ing. Miroslav Vlček	91.041.027	1	/7.0
-RCF1	Filtr RFC vývodový Efferent RFC filter Ableitenden RFC Filter	FBOPR1624	Ing. Miroslav Vlček	91.041.015	1	/7.6
-RCF2	Filtr RFC vývodový Efferent RFC filter Ableitenden RFC Filter	FBOPR1624	Ing. Miroslav Vlček	91.041.015	1	/7.8

The manufacturer reserves right to use an equivalent replacement device.

3

Kusovník artiklů / Parts list / Stückliste

Označení přístroje Device identification Geräteidentifikation	Typ přístroje Device description Gerätebeschreibung	Objednací číslo Type number Typennummer	Výrobce Manufacturer Hersteller	Skladové číslo Part number Lagernummer	Množství Quantity Menge	Umístění Location Stelle
-RCF11	Filtr RFC vývodový Efferent RFC filter Ableitenden RFC Filter	FBOPR1624	Ing. Miroslav Vlček	91.041.015	1	/6.6
-RCF12	Filtr RFC vývodový Efferent RFC filter Ableitenden RFC Filter	FBOPR1624	Ing. Miroslav Vlček	91.041.015	1	/6.7
-+R10.4	Kleštinová vývodka Cable gland Kabelverschraubung	AG-1545.12.06	Schmachtl CZ s.r.o.	91.070.010	2	/15.6
-+R10.4	Matice černá Nut black Nuss schwarz	AG8245.12	Schmachtl CZ s.r.o.	91.072.010	2	/15.6
-FA1	Tepelné relé - 0.74A Thermal relay - 0.74A Thermische Relais - 0.74A	T16-0,74	ABB	91.050.021	1	/7.6
-FA2	Tepelné relé - 2.3A Thermal relay - 2.3A Thermorelais - 2,3A	ABB.T16-2,3	ABB	91.050.024	1	/7.8
-FU4	Pojistka trubičková - 200mA/250V, pomalá, 5x20 Tube fuse - 200mA/250V, slow, 5x20 Rohrsicherung - 160mA / 250V, langsam, 5x20	T200mA/250V	ESKA	91.230.037	1	/15.1
-FU4	Svorka pojistková Fuse terminal Sicherungsklemme	WK4/THSi5U	WIELAND	91.251.102	1	/15.1
-FU5	Svorka pojistková Fuse terminal Sicherungsklemme	WK4/THSi5U	WIELAND	91.251.102	1	/15.9
-H10.4	Maják - základna Lighthouse - Base Leuchtturm - Basis	SL7-CB-100	EATON	91.063.058	1	/15.3
-H10.4	Maják - žlutý Lighthouse - yellow Leuchtturm - gelb	SL7-L-Y	EATON	91.063.059	1	/15.3
-H10.4	Žárovka 24V Lamp 24V Lampe 24V	SL7-L24	EATON	91.063.061	1	/15.3

The manufacturer reserves right to use an equivalent replacement device.

3.a

Kusovník artiklů / Parts list / Stückliste

Označení přístroje Device identification Geräteidentifikation	Typ přístroje Device description Gerätebeschreibung	Objednací číslo Type number Typennummer	Výrobce Manufacturer Hersteller	Skladové číslo Part number Lagernummer	Množství Quantity Menge	Umístění Location Stelle
-HL1	Signálka LED bílá na adaptér White LED light for adapter Weißes LED-Licht für Adapter	M22-LED-W	EATON	91.061.034	1	/14.8
-KM1	Ministykač 4kW/400V Minicontactor 4kW/400V Minischutz 4kW/400V	B6S-30-01-1.7-71	ABB	91.040.049	1	/11.2
-KM2	Ministykač 4kW/400V Minicontactor 4kW/400V Minischutz 4kW/400V	B6S-30-01-1.7-71	ABB	91.040.049	1	/11.4
-KM11	Stýkač 5,5kW/400V Contactor 5,5kW/400V Schütz 5,5kW/400V	AF12-30-01-11	ABB	91.040.051	1	/14.7
-KM11	Pomocný kontakt - 1xNO Auxiliary contact - 1xNO Hilfskontakt - 1xNO	CA4-10	ABB	91.041.044	1	/14.7
-KM12	Stýkač 5,5kW/400V Contactor 5,5kW/400V Schütz 5,5kW/400V	AF12-30-01-11	ABB	91.040.051	1	/14.8
-KM12	Pomocný kontakt - 1xNO Auxiliary contact - 1xNO Hilfskontakt - 1xNO	CA4-10	ABB	91.041.044	1	/14.8
-QS1	3 pólový odpínač, 25A Disconnector - 3P, 25A Trennschalter - 3P, 25A	OT25FT3	ABB	91.170.016	1	/6.0
-QS1	Kryt svorek Terminal shroud Klemmenabdeckung	OTS40T3	ABB	91.170.017	1	/6.0
-QS1	Rukojeť odpínače - černá Handle switch - black Griffschalter - schwarz	OHBS3RH	ABB	91.180.016	1	/6.0
-RP1	Svorka rychloupínací Fastconnect clamp Fast Connect Klemm	WAGO 224-112	WAGO	91.250.009	3	/7.4
-RP2	Svorka rychloupínací Fastconnect clamp Fast Connect Klemm	WAGO 224-112	WAGO	91.250.009	3	/13.3

The manufacturer reserves right to use an equivalent replacement device.

3.b

Kusovník artiklů / Parts list / Stückliste

Označení přístroje Device identification Geräteidentifikation	Typ přístroje Device description Gerätebeschreibung	Objednací číslo Type number Typennummer	Výrobce Manufacturer Hersteller	Skladové číslo Part number Lagernummer	Množství Quantity Menge	Umístění Location Stelle
-SA1	Upevňovací adaptér Mounting adapter Montageadapter	M22-A4	EATON	91.061.045	1	/9.6
-SA1	Kontaktní blok - 1NO; na panel Contact block - 1NO; on the panel Kontaktblock - 1NO; auf dem panel	M22-K10	EATON	91.061.022	3	/9.6
-SA2	Hlavice tlačítka - černá Head button - black Kopftaste - schwarz	M22-D-S	EATON	91.060.035	1	/15.1
-SA2	Upevňovací adaptér + 1NO Attaching adapter + 1NO Montageadapter + 1NO	M22-AK10	EATON	91.061.021	1	/15.1
-SB1	Total stop - hlavice + 2xNC Emergency-stop - button + 2xNC Not-Aus-Pilz - Taster + 2xNC	YW1B-V4E02R	IDEC	91.060.084	1	/14.2
-SB1	Kontakt - 1x NC Contact - 1x NC Kontakt - 1x NC	YW-E01	IDEC	91.061.054	1	/14.2
-SB2	Kontaktní blok - 1NO; na panel Contact block - 1NO; on the panel Kontaktblock - 1NO; auf dem panel	M22-K10	EATON	91.061.022	1	/9.1
-SB3	Kontaktní blok - 1NO; na panel Contact block - 1NO; on the panel Kontaktblock - 1NO; auf dem panel	M22-K10	EATON	91.061.022	1	/9.2
-SB4	Upevňovací adaptér Mounting adapter Montageadapter	M22-A	EATON	91.061.028	1	/9.2
-SB4	Kontaktní blok - 1NO; na panel Contact block - 1NO; on the panel Kontaktblock - 1NO; auf dem panel	M22-K10	EATON	91.061.022	1	/9.2
-SB4	Hlavice dvoutlačítka bílá/černá, zavřít/otevřít Double button head white/black, arrow close/open Doppelrundkopf weiß / schwarz, Pfeil Schließen / Öffnen	M22-DDL-WS-*	EATON	91.060.055	1	/9.2
-SB5	Kontaktní blok - 1NO; na panel Contact block - 1NO; on the panel Kontaktblock - 1NO; auf dem panel	M22-K10	EATON	91.061.022	1	/9.3

The manufacturer reserves right to use an equivalent replacement device.

3.c

Kusovník artiklů / Parts list / Stückliste

Označení přístroje Device identification Geräteidentifikation	Typ přístroje Device description Gerätebeschreibung	Objednací číslo Type number Typennummer	Výrobce Manufacturer Hersteller	Skladové číslo Part number Lagernummer	Množství Quantity Menge	Umístění Location Stelle
-SB6	Upevňovací adaptér Mounting adapter Montageadapter	M22-A	EATON	91.061.028	1	/9.4
-SB6	Hlavice dvoutlačítka bílá/černá šipka nahoru/dolů Double button head white/black, arrow up/down Doppelrundkopf weiß / schwarz, Pfeil nach oben / unten	M22-DDL-WS-*-*	EATON	91.060.054	1	/9.4
-SB6	Kontaktní blok - 1NO; na panel Contact block - 1NO; on the panel Kontaktblock - 1NO; auf dem panel	M22-K10	EATON	91.061.022	1	/9.4
-SB7	Kontaktní blok - 1NO; na panel Contact block - 1NO; on the panel Kontaktblock - 1NO; auf dem panel	M22-K10	EATON	91.061.022	1	/9.5
-SB8	Hlavice prosvětleného tlačítka modrá Blue transparent switch Blau transparent Schalter	M22-DL-B	EATON	91.060.132	1	/14.6
-TR1	Toroidní transformátor - 400V/230V/20V 4,5A 90VA Toroidal transformer - 400V / 230V / 20V 4,5A 90VA Ringkerntransformator - 400V / 230V / 20V 4,5A 90VA	400V/230V/20V 4,5A 90VA	KARBAN s.r.o.	91.080.023	1	/6.6
-SQ21	Bezpečnostní koncový spínač - 2xNC Safety Limit Switch - 2x NC Sicherheitsendschalter - 2x NC	QKS8	KEDU	91.173.012	1	/14.2
-SA1	Hlavice s otočným přepínačem - 4 polohy Head with rotary switch - 4 positions Kopf mit Drehschalter - 4 Positionen	M22 - WRK4	EATON	91.060.087	1	/9.6
-SQ2	Koncový spínač - 1NC+1NO Limit switch - 1NC+1NO Endschalter - 1NC+1NO	D4N-4A31	OMRON	91.173.007	1	/10.4
-SQ1	Koncový spínač - 1NC+1NO Limit switch - 1NC+1NO Endschalter - 1NC+1NO	D4N-4A31	OMRON	91.173.007	1	/10.3
-FM1	Frekvenční měnič - 3.7kW, 3x230VAC Frequency converter - 3.7kW, 3x230VAC Frequenzumrichter - 3.7 kW, 3x230VAC	VFD17AME23ANNAA	DELTA ELECTRONICS, INC.	91.012.196	1	/7.0
-M2	Čerpadlo chlazení 120W Cooling pump 120W Kühlpumpe 120W	PA70/120	SAP srl	91.020.032	1	/7.6

The manufacturer reserves right to use an equivalent replacement device.

3.d

Kusovník artiklů / Parts list / Stückliste

Označení přístroje Device identification Geräteidentifikation	Typ přístroje Device description Gerätebeschreibung	Objednací číslo Type number Typennummer	Výrobce Manufacturer Hersteller	Skladové číslo Part number Lagernummer	Množství Quantity Menge	Umístění Location Stelle
-+R10.4	PS 41x89x74mm - šedá PS 41x89x74mm - grey PS 41x89x74mm - grau	Z54	SOS Electronic, spol. s r.o.	91.190.036	1	/15.6
-CU1	Konektor Connector Stecker	SHM10-5,08	EUROCLAMP	91.144.030	6	/8.0
-CU1	Konektor Connector Stecker	SHM02-5,08	EUROCLAMP	91.144.032	1	/8.0
-PA1	Pojistka válcová - 20A, 10x38, CC Tube fuse - 20A, 10x38, CC Rohrsicherung - 20A, 10x38, CC	PRO-FER-ATDR20	Mersen	91.230.081	1	/7.1
-PA1	Pojistkový odpojovač - 3P CC Fuse disconnector - 3P CC Sicherungstrenner - 3P CC	PRO-FER-USCC3	Mersen	91.241.022	1	/7.1
-PA2	Pojistka válcová - 2A, 10x38, CC Tube fuse - 2A, 10x38, CC Rohrsicherung - 2A, 10x38, CC	PRO-FER-ATDR2	Mersen	91.230.079	2	/6.4
-PA2	Pojistkový odpojovač - 2P CC Fuse disconnector - 2P CC Sicherungstrenner - 2P CC	PRO-FER-USCC2	Mersen	91.241.021	1	/6.4
-PA3	Pojistka válcová - 5A, 10x38, CC Tube fuse - 5A, 10x38, CC Rohrsicherung - 5A, 10x38, CC	PRO-FER-ATDR5	Mersen	91.230.082	1	/7.5
-PA3	Pojistkový odpojovač - 3P CC Fuse disconnector - 3P CC Sicherungstrenner - 3P CC	PRO-FER-USCC3	Mersen	91.241.022	1	/7.5
-+R10.4	Svorka Clamp Klemmen	WAGO.260-301	WAGO	91.250.008	1	/15.6
-+R10.4	Koncová bočnice End side Endseite	WAGO.260-361	WAGO	91.252.003	1	/15.6
-+RSN	Svorka Clamp Klemmen	WAGO.260-301	WAGO	91.250.008	5	/13.6

The manufacturer reserves right to use an equivalent replacement device.

3.e

Kusovník artiklů / Parts list / Stückliste

Označení přístroje Device identification Geräteidentifikation	Typ přístroje Device description Gerätebeschreibung	Objednací číslo Type number Typennummer	Výrobce Manufacturer Hersteller	Skladové číslo Part number Lagernummer	Množství Quantity Menge	Umístění Location Stelle
-+RSN	Koncová bočnice End side Endseite	WAGO.260-361	WAGO	91.252.003	1	/13.6
-FU3	Svorka pojistková Fuse terminal Sicherungsklemme	WK4/THSi5U	WIELAND	91.251.102	1	/6.8
-M4	Ventilátor 24VDC, 154CFM Fan 24VDC, 154CFM Fan 24VDC, 154CFM	RDH1238 B2	Xinruilian Electronic Co.	91.015.126	1	/11.7

The manufacturer reserves right to use an equivalent replacement device.

3.f

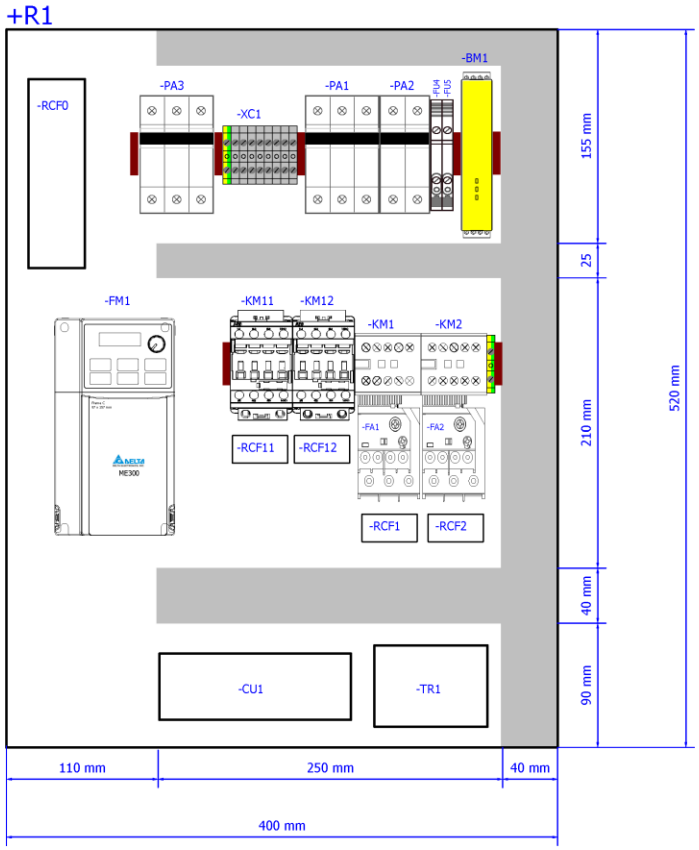

3.g

BOMAR, s.r.o. Těžební 1236/1 CZ 627 00, Brno	Stroj/Machine/Maschine: WorkLine 610.450 DGH	Název stránky/Name page/Name seiten: Rozmístění prvků v rozvaděči R1 / Placement of elements in enclosure R1 / Platzierung der Elemente im Schaltschrank R1	Číslo dok./Doc.No/Anzahl der Dokumente.: ES-101.333-T3-V5.3 Napájení/Power supply/Einspeinsung: 3x230V+PE, 50/60Hz Zpracoval/Processed /Hat verarbeitet: Datum/Date/Datum: 23.08.2021	List/Page/Seite: 4 Listů/Pages/Seiten: 23

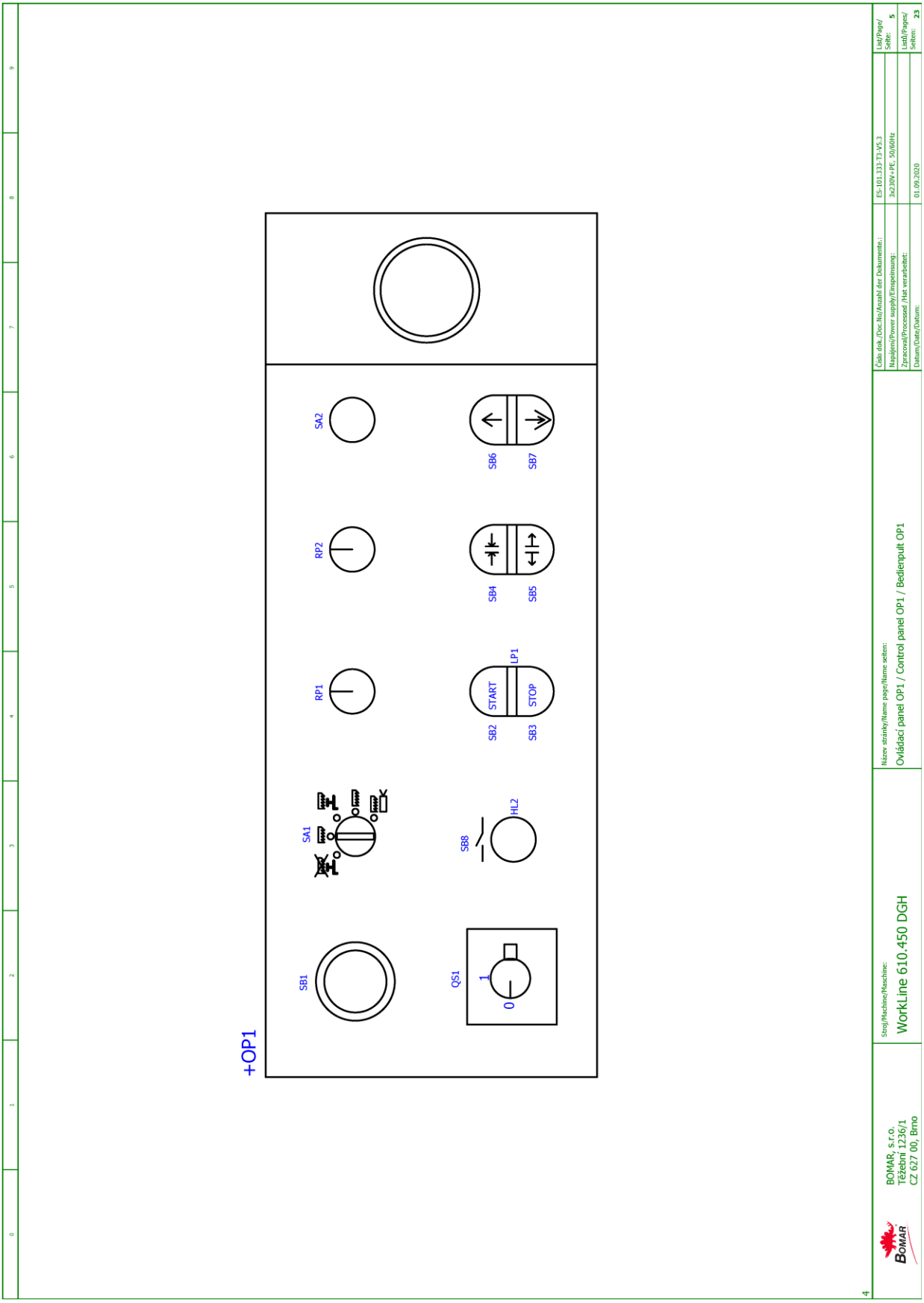
+OP1
SB1
SA1
QS1
1
0
SB8
HL2
RP1
RP2
SA2
SB2
START
SB3
STOP
LP1
SB4
SB5
SB6
SB7
Číslo dok./Doc.No/Anzahl der Dokumente.:
ES-101.333-T3-V5.3
Napájení/Power supply/Einspeisung:
3x230V+PE, 50/60Hz
Zpracoval/Processed /Hat verarbeitet:
Datum/Date/Datum:
01.09.2020
List/Page/
Seite: 5
List/Pages/
Seiten: 23
Název stránky/Name page/Name seiten:
Ovládací panel OP1 / Control panel OP1 / Bedienpult OP1
Stroj/Machine/Maschine:
WorkLine 610.450 DGH
BOMAR, s.r.o.
Těžební 1236/1
CZ 627 00, Brno

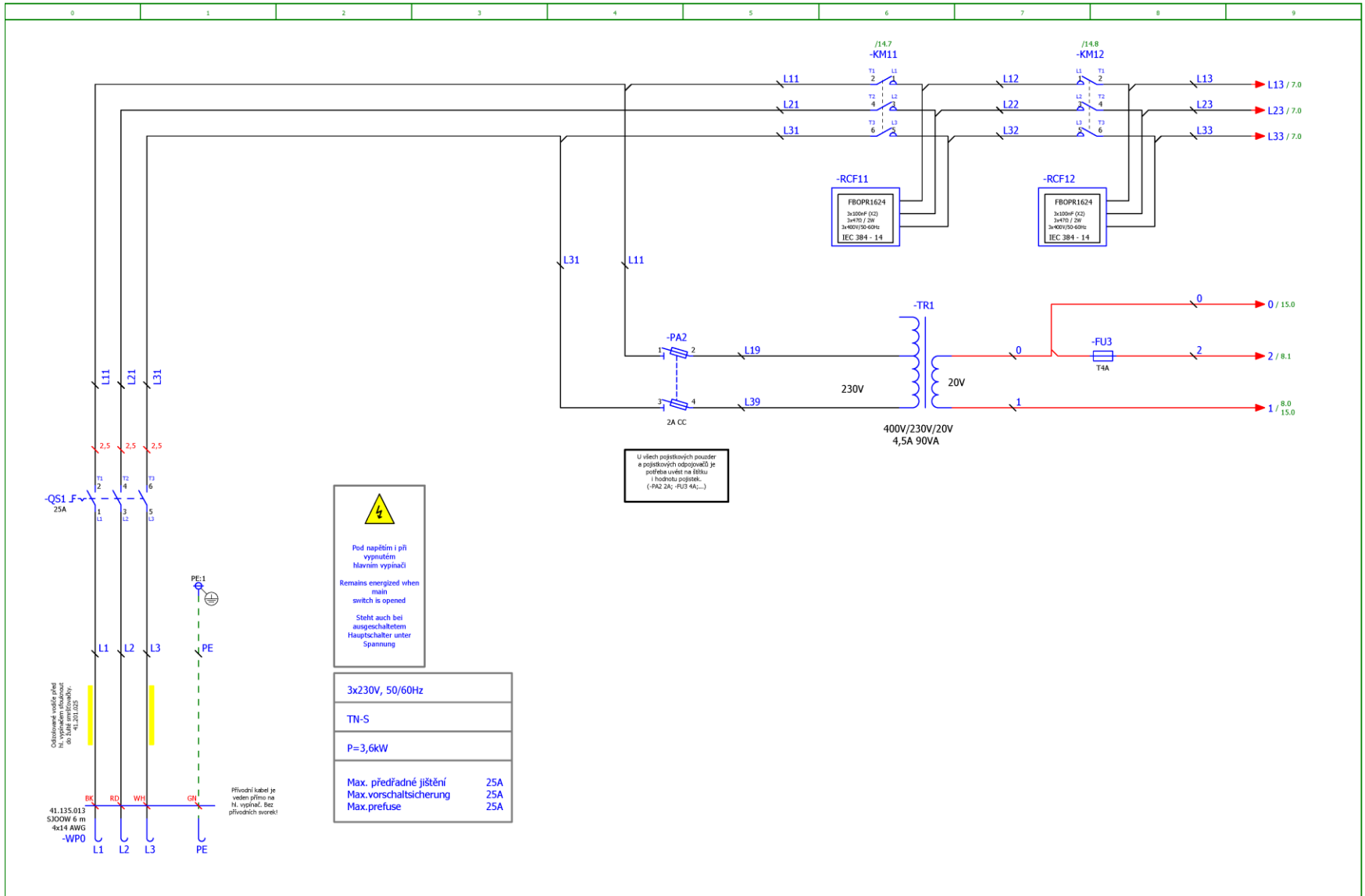

Schémata
Schemas
Schematics

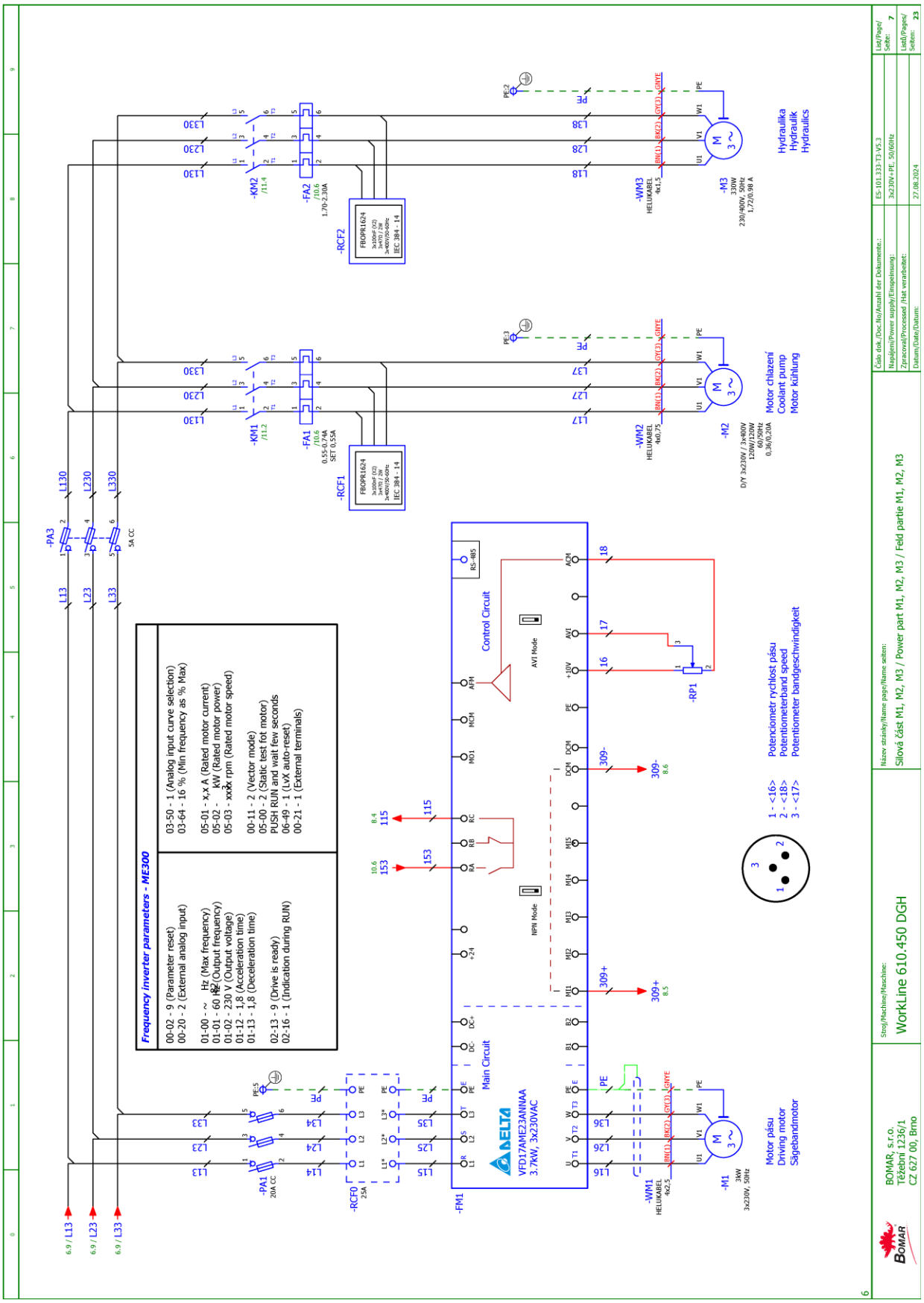
Frequency inverter parameters - ME300
00-02 - 9 (Parameter reset)
00-20 - 2 (External analog input)
01-00 - ~ Hz (Max frequency)
01-01 - 60 Hz (Output frequency)
01-02 - 230 V (Output voltage)
01-12 - 1,8 (Acceleration time)
01-13 - 1,8 (Deceleration time)
02-13 - 9 (Drive is ready)
02-16 - 1 (Indication during RUN)
03-50 - 1 (Analog input curve selection)
03-64 - 16 % (Min frequency as % Max)
05-01 - x,x A (Rated motor current)
05-02 - ~ kW (Rated motor power)
05-03 - xxxx rpm (Rated motor speed)
00-11 - 2 (Vector mode)
05-00 - 2 (Static test fot motor)
PUSH RUN and wait few seconds
06-49 - 1 (LvX auto-reset)
00-21 - 1 (External terminals)
Control Circuit
Main Circuit
DELTA
VFD17AME23ANNAA
3.7KW, 3x230VAC
AVI Mode
NPN Mode
RS-485
-FM1
-PA1
20A CC
-PA3
5A CC
-RCF0
25A
-KM1
-KM2
-FA1
-FA2
-RCF1
-RCF2
-WM1
-WM2
-WM3
-M1
-M2
-M3
-RP1
Motor pásu
Driving motor
Sägebandmotor
Motor chlazení
Coolant pump
Motor kühlung
Hydraulika
Hydraulik
Hydraulics
Potenciometr rychlost pásu
Potentiometerband speed
Potentiometer bandgeschwindigkeit
Stroj/Machine/Maschine:
WorkLine 610.450 DGH
Název stránky/Name page/Name seiten:
Silová část M1, M2, M3 / Power part M1, M2, M3 / Feld partie M1, M2, M3
BOMAR, s.r.o.
Těžební 1236/1
CZ 627 00, Brno
ES-101.333-T3-V5.3
3x230V+PE, 50/60Hz
27.08.2024

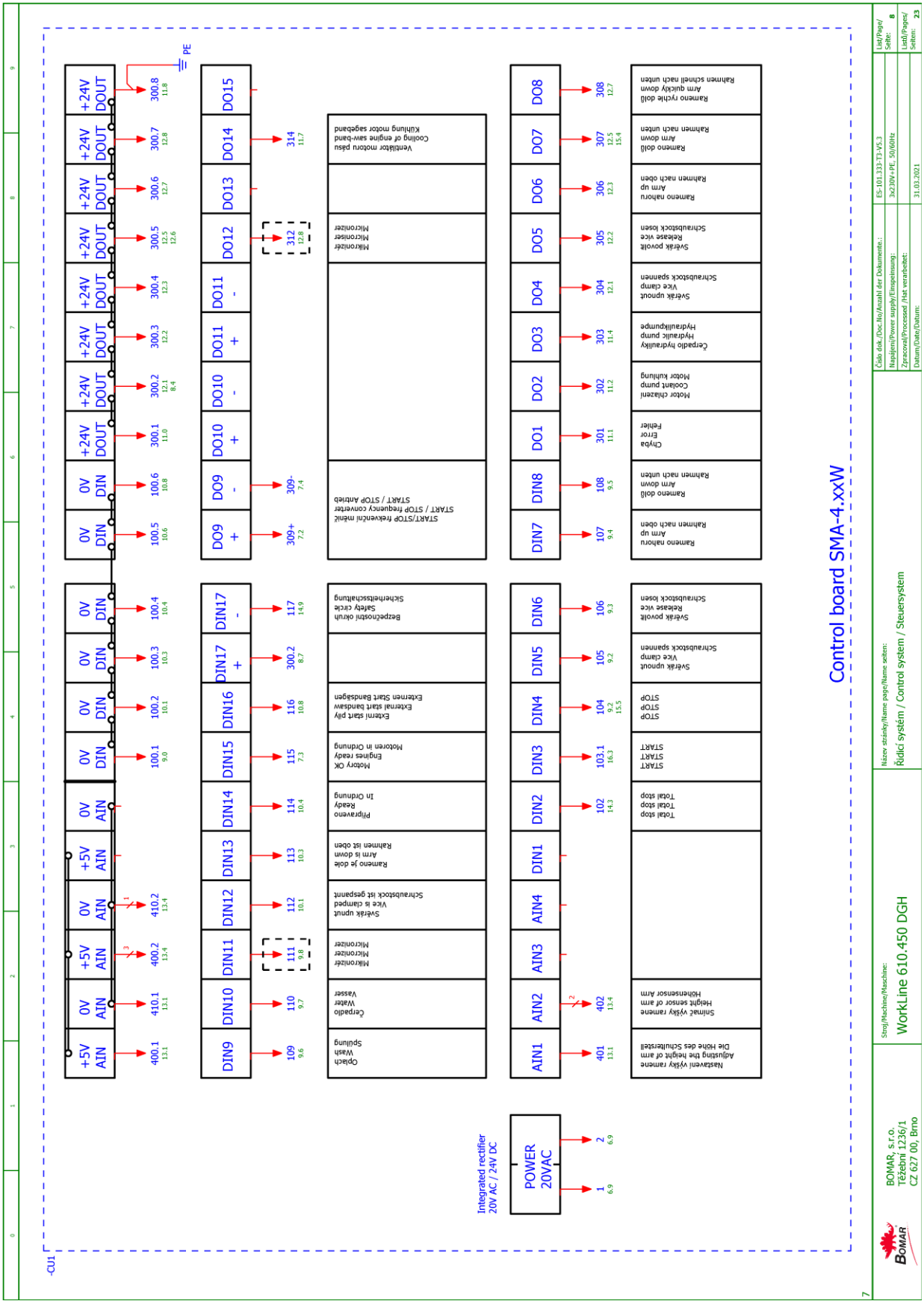
Control board SMA-4.xxW
-CU1
+5V AIN
0V AIN
0V DIN
+24V DOUT
DIN9
DIN10
DIN11
DIN12
DIN13
DIN14
DIN15
DIN16
DIN17
DO9
DO10
DO11
DO12
DO13
DO14
DO15
AIN1
AIN2
AIN3
AIN4
DIN1
DIN2
DIN3
DIN4
DIN5
DIN6
DIN7
DIN8
DO1
DO2
DO3
DO4
DO5
DO6
DO7
DO8
POWER 20VAC
Integrated rectifier 20V AC / 24V DC
PE
Nastavení výšky ramene
Adjusting the height of arm
Die Höhe des Schultersteil
Snímač výšky ramene
Height sensor of arm
Höhensensor Arm
Rámeno nahoru
Arm up
Rahmen nach oben
Rámeno dolů
Arm down
Rahmen nach unten
Rámeno rychle dolů
Arm quickly down
Rahmen schnell nach unten
Chyba
Error
Fehler
Motor chlazení
Coolant pump
Motor Kühlung
Čerpadlo hydrauliky
Hydraulik pump
Hydraulikpumpe
Svěrák upnout
Vice clamp
Schraubstock spannen
Svěrák povolit
Release vice
Schraubstock lösen
STOP
STOP
STOP
START
START
START
Total stop
Total stop
Total stop
Svěrák upnout
Vice clamp
Schraubstock spannen
Svěrák povolit
Release vice
Schraubstock lösen
Bezpečnostní okruh
Safety circle
Sicherheitsschaltung
Externí start pily
External start bandsaw
Externen Start Bandsägen
Motory OK
Engines ready
Motoren in Ordnung
Připraveno
Ready
In Ordnung
Rameno je dole
Arm is down
Rahmen ist oben
Svěrák upnut
Vice is clamped
Schraubstock ist gespannt
Milronizér
Milronizer
Milronizer
Milronizer
Milronizer
Čerpadlo
Water
Wasser
Object
Wash
Spülung
START / STOP frekvenční měnič
START / STOP frequency converter
START / STOP Antrieb
Milronizer
Milronizer
Milronizer
Ventilátor motoru pásu
Cooling of engine saw-band
Kühlung motor sageband
Číslo dok./Doc.No/Anzahl der Dokumente.:
ES-101.333-T3-V5.3
Napájení/Power supply/Einspeisung:
3x230V+PE, 50/60Hz
Zpracoval/Processed /Hat verarbeitet:
Datum/Date/Datum:
31.03.2021
List/Page/Seite: 8
List(i)/Pages/Seiten: 23
Název stránky/Name page/Name seiten:
Řídící systém / Control system / Steuersystem
Stroj/Machine/Maschine:
WorkLine 610.450 DGH
BOMAR, s.r.o.
Těžební 1236/1
CZ 627 00, Brno

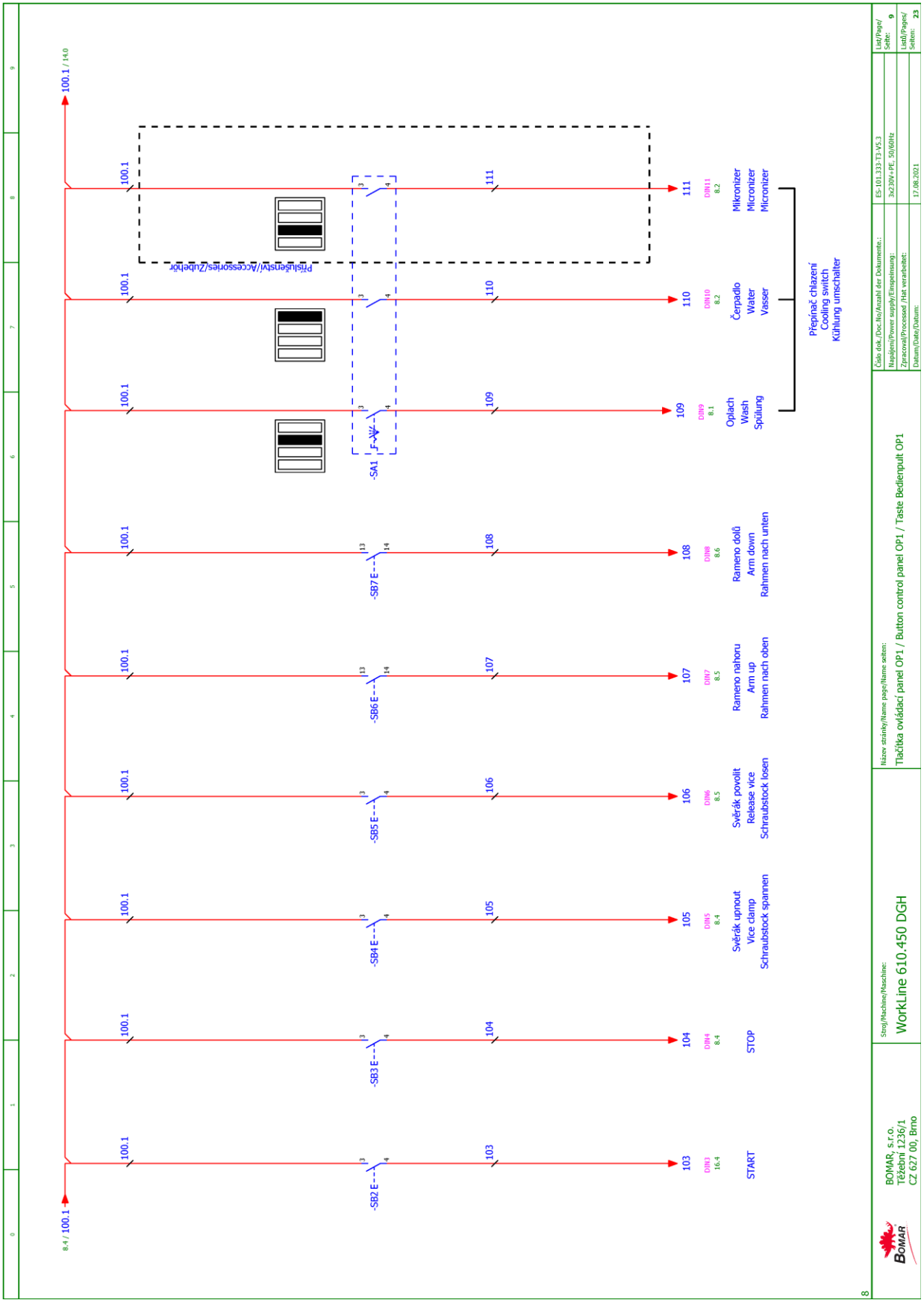
8.4 / 100.1
100.1 / 14.0
-SB2 E
-SB3 E
-SB4 E
-SB5 E
-SB6 E
-SB7 E
-SA1
Příslušenství/Accessories/Zubehör
103
104
105
106
107
108
109
110
111
DIN3 16.4
DIN4 8.4
DIN5 8.4
DIN6 8.5
DIN7 8.5
DIN8 8.6
DIN9 8.1
DIN10 8.2
DIN11 8.2
START
STOP
Svěrák upnout
Vice clamp
Schraubstock spannen
Svěrák povolit
Release vice
Schraubstock losen
Rameno nahoru
Arm up
Rahmen nach oben
Rameno dolů
Arm down
Rahmen nach unten
Oplach
Wash
Spülung
Čerpadlo
Water
Vasser
Mikronizer
Micronizer
Micronizer
Přepínač chlazení
Cooling switch
Kühlung umschalter
BOMAR, s.r.o.
Těžební 1236/1
CZ 627 00, Brno
Stroj/Machine/Maschine:
WorkLine 610.450 DGH
Název stránky/Name page/Name seiten:
Tlačítka ovládací panel OP1 / Button control panel OP1 / Taste Bedienpult OP1
Číslo dok./Doc.No/Anzahl der Dokumente.:
ES-101.333-T3-V5.3
Napájení/Power supply/Einspeisung:
3x230V+PE, 50/60Hz
Zpracoval/Processed /Hat verarbeitet:
Datum/Date/Datum:
17.08.2021
List/Page/Seite: 9
List/Pages/Seiten: 23

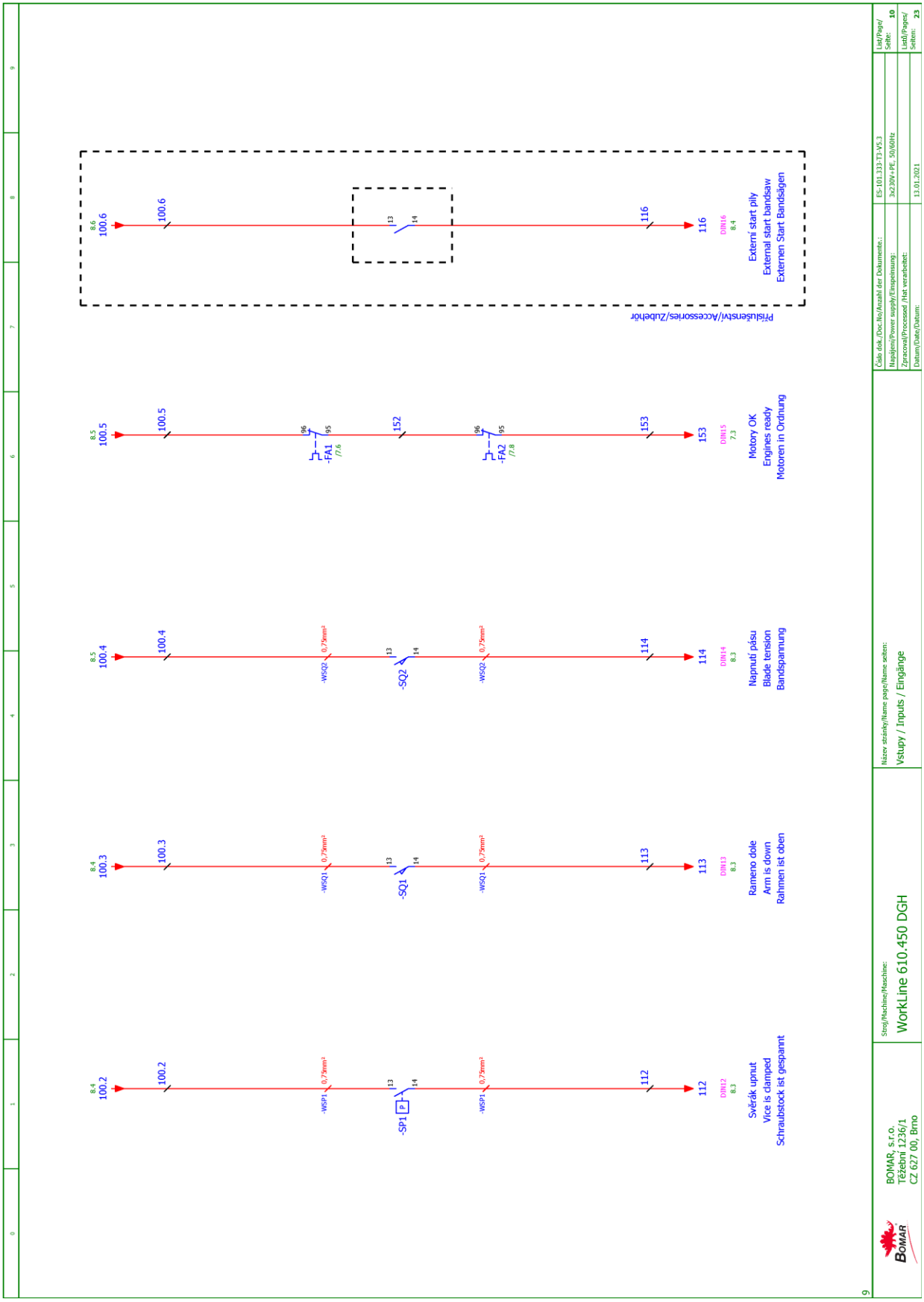

Schémata
Schemas
Schematics

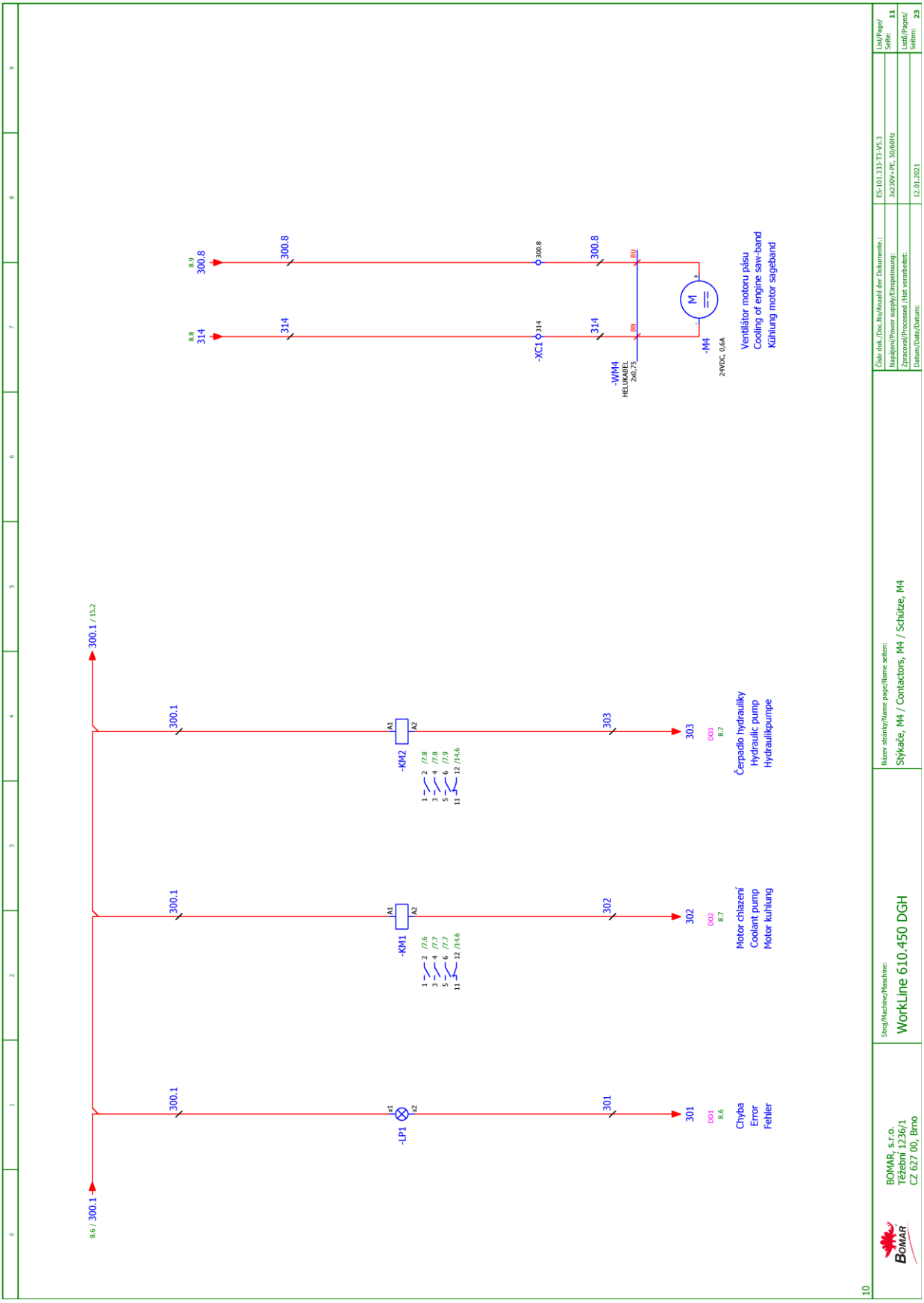
8.6 / 300.1
300.1 / 15.2
300.1
-LP1
Chyba
Error
Fehler
-KM1
Motor chlazení
Coolant pump
Motor kuhlung
-KM2
Čerpadlo hydrauliky
Hydraulic pump
Hydrauliikpumpe
-XC1
-WM4
HELUKABEL
2x0,75
-M4
24VDC, 0,6A
Ventilátor motoru pásu
Cooling of engine saw-band
Kühlung motor sageband
Číslo dok./Doc.No/Anzahl der Dokumente.:
ES-101.333-T3-V5.3
Napájení/Power supply/Einspeisung:
3x230V+PE, 50/60Hz
Zpracoval/Processed /Hat verarbeitet:
Datum/Date/Datum:
12.01.2021
List/Page/Seite: 11
List/Pages/Seiten: 23
Název stránky/Name page/Name seiten:
Stykače, M4 / Contactors, M4 / Schütze, M4
Stroj/Machine/Maschine:
WorkLine 610.450 DGH
BOMAR, s.r.o.
Těžební 1236/1
CZ 627 00, Brno

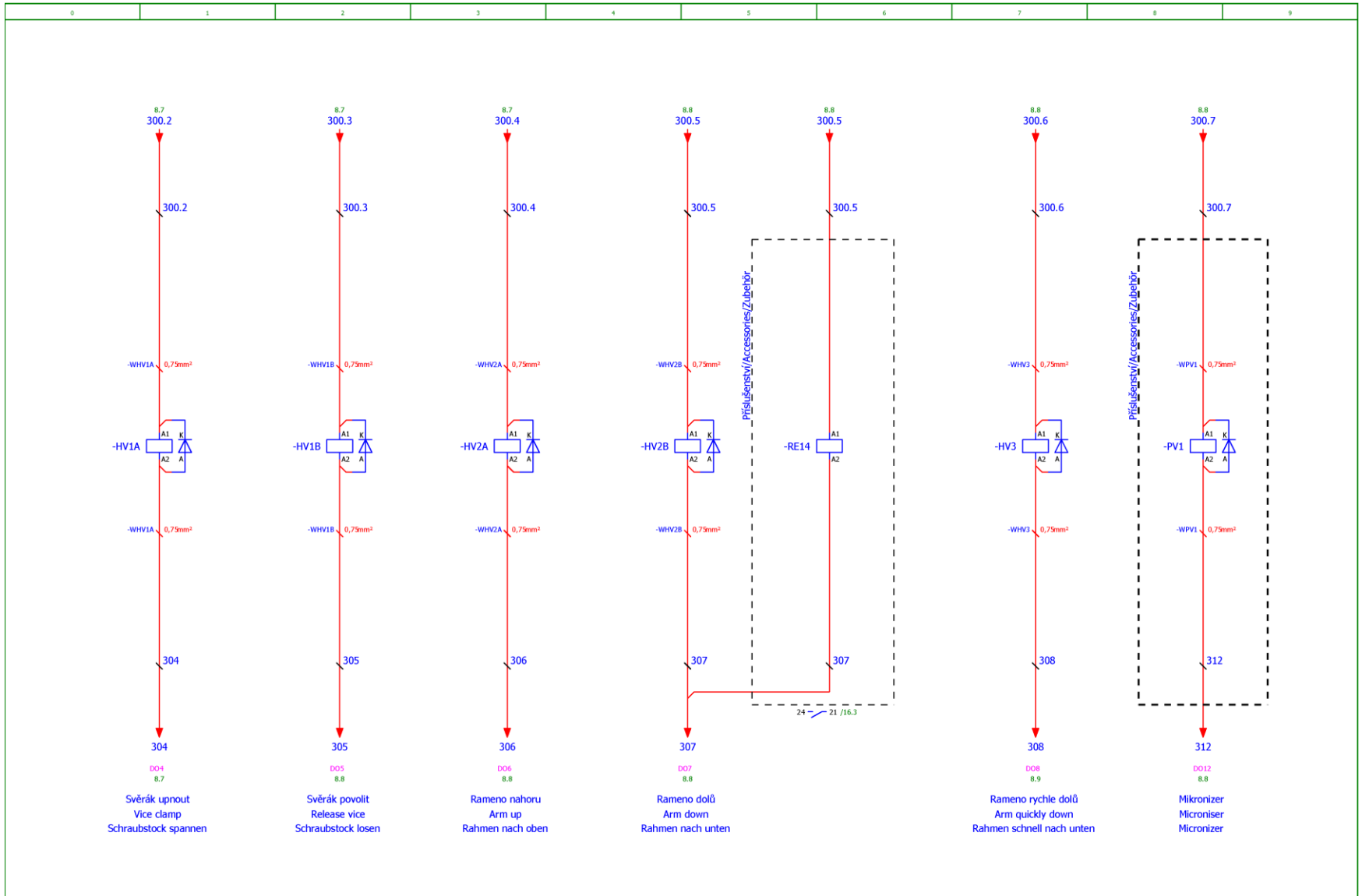

Schémata
Schemas
Schematics

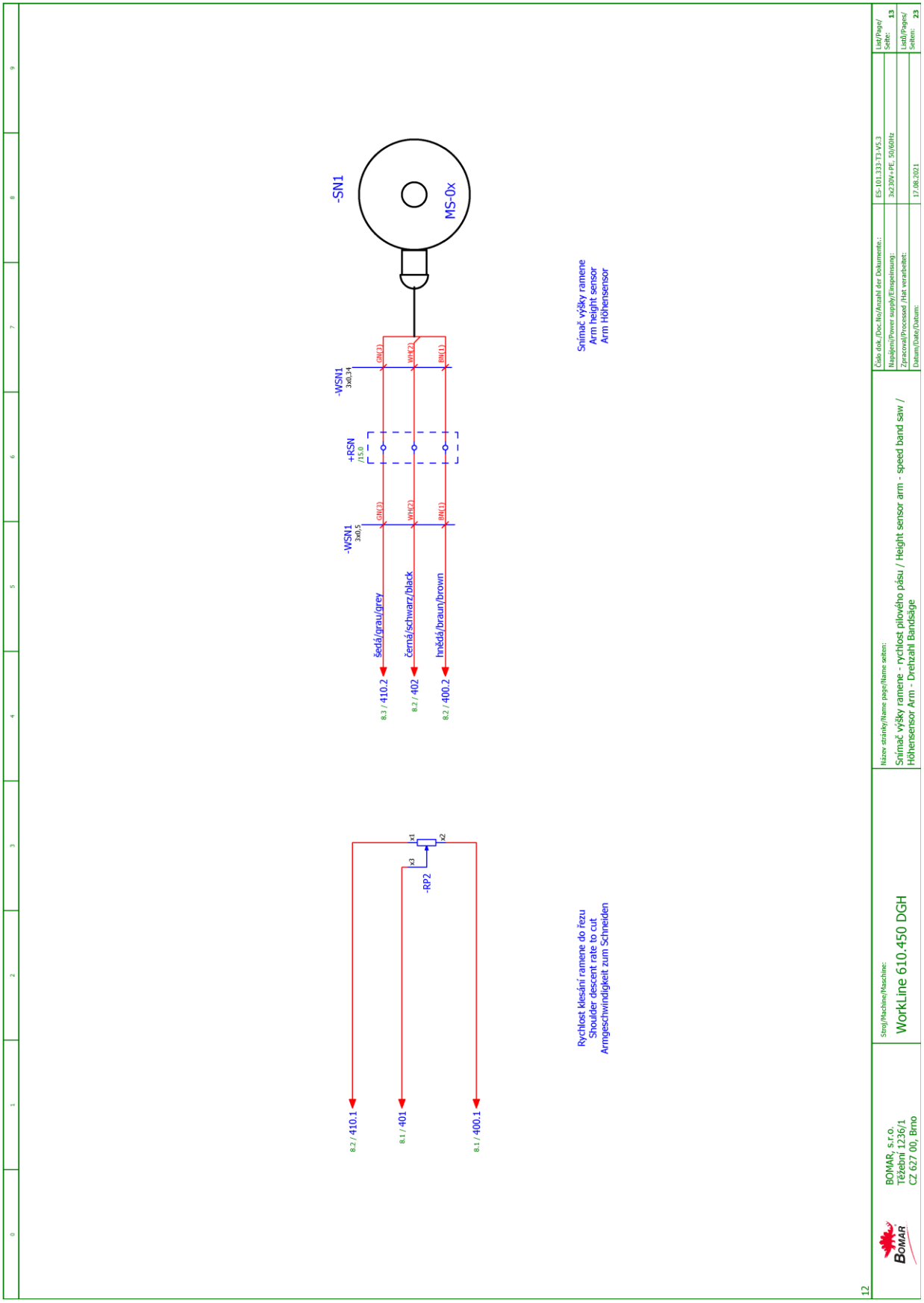
-SN1
MS-0x
-WSN1
3x0.34
+RSN
/15.0
-WSN1
3x0.5
GN(3)
WH(2)
BN(1)
Šedá/grau/grey
Černá/schwarz/black
hnědá/braun/brown
8.3 / 410.2
8.2 / 402
8.2 / 400.2
Snímač výšky ramene
Arm height sensor
Arm Höhensensor
x1
x2
x3
-RP2
8.2 / 410.1
8.1 / 401
8.1 / 400.1
Rychlost klesání ramene do řezu
Shoulder descent rate to cut
Armgeschwindigkeit zum Schneiden
12
BOMAR, s.r.o.
Těžební 1236/1
CZ 627 00, Brno
Stroj/Machine/Maschine:
WorkLine 610.450 DGH
Název stránky/Name page/Name seiten:
Snímač výšky ramene - rychlost pilového pásu / Height sensor arm - speed band saw /
Höhensensor Arm - Drehzahl Bandsäge
Číslo dok./Doc.No/Anzahl der Dokumente.:
ES-101.333-T3-V5.3
Napájení/Power supply/Einspeisung:
3x230V+PE, 50/60Hz
Zpracoval/Processed /Hat verarbeitet:
Datum/Date/Datum:
17.08.2021
List/Page/
Seite: 13
List/Pages/
Seiten: 23

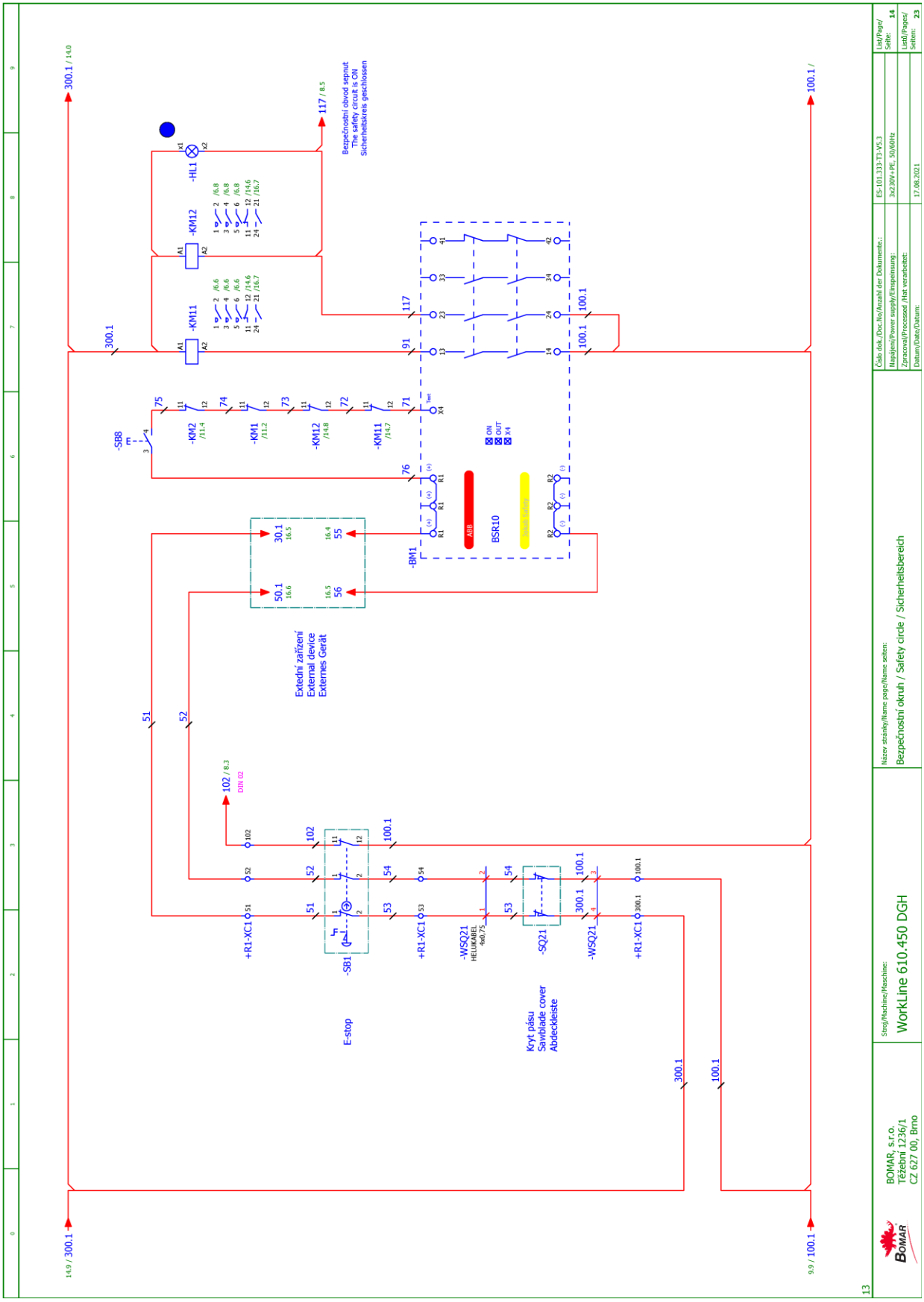
Bezpečnostní obvod sepnut
The safety circuit is ON
Sicherheitskreis geschlossen
-HL1
-KM12
-KM11
-SB8
-KM2
-KM1
-BM1
BSR10
Externí zařízení
External device
Externes Gerät
+R1-XC1
-SB1
E-stop
-WSQ21
-SQ21
Kryt pásu
Sawblade cover
Abdeckleiste
Číslo dok./Doc.No/Anzahl der Dokumente:
ES-101.333-T3-V5.3
Napájení/Power supply/Einspeisung:
3x230V+PE, 50/60Hz
Zpracoval/Processed /Hat verarbeitet:
Datum/Date/Datum:
17.08.2021
List/Page/Seite: 14
List/Pages/Seiten: 23
Název stránky/Name page/Name seiten:
Bezpečnostní okruh / Safety circle / Sicherheitsbereich
Stroj/Machine/Maschine:
WorkLine 610.450 DGH
BOMAR, s.r.o.
Těžební 1236/1
CZ 627 00, Brno

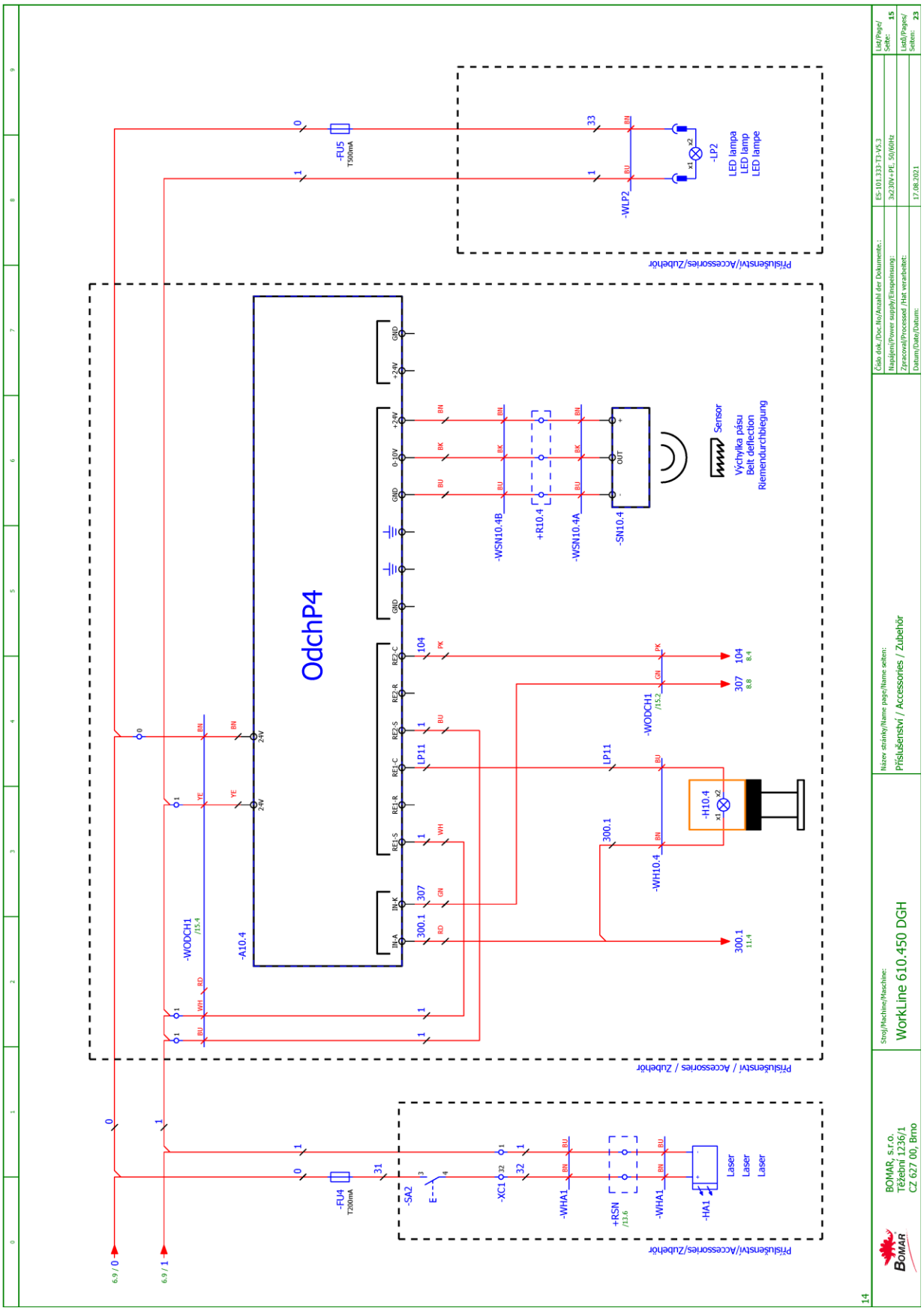
OdchP4
-A10.4
-FU5
T500mA
-LP2
LED lampa
LED lamp
LED lampe
-WLP2
Příslušenství/Accessories/Zubehör
-WODCH1
-WSN10.4B
+R10.4
-WSN10.4A
-SN10.4
Sensor
Výchylka pásu
Belt deflection
Riemendurchbiegung
-WODCH1
-H10.4
-WH10.4
-FU4
T200mA
-SA2
-XC1
-WHA1
+RSN
-WHA1
-HA1
Laser
Laser
Laser
Příslušenství / Accessories / Zubehör
Číslo dok./Doc.No/Anzahl der Dokumente.:
ES-101.333-T3-V5.3
Napájení/Power supply/Einspeisung:
3x230V+PE, 50/60Hz
Zpracoval/Processed /Hat verarbeitet:
Datum/Date/Datum:
17.08.2021
List/Page/Seite: 15
List/Pages/Seiten: 23
Název stránky/Name page/Name seiten:
Příslušenství / Accessories / Zubehör
Stroj/Machine/Maschine:
WorkLine 610.450 DGH
BOMAR, s.r.o.
Těžební 1236/1
CZ 627 00, Brno
14

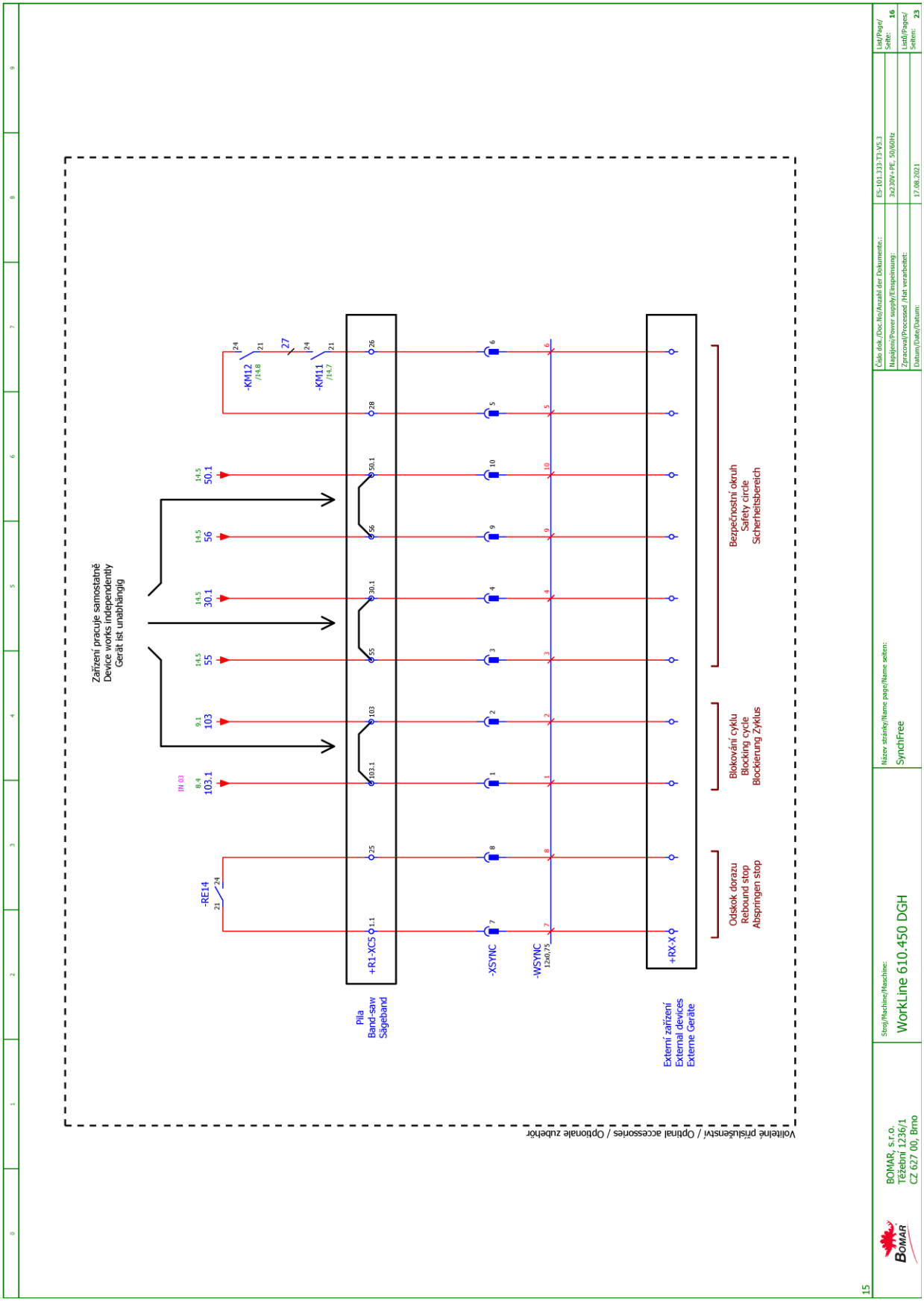
Zařízení pracuje samostatně
Device works independently
Gerät ist unabhängig
-RE14
+R1-XC5
Pila
Band-saw
Sägeband
-XSYNC
-WSYNC
+RX-X
Externí zařízení
External devices
Externe Geräte
Odskok dorazu
Rebound stop
Abspringen stop
Blokování cyklu
Blocking cycle
Blockierung Zyklus
Bezpečnostní okruh
Safety circle
Sicherheitsbereich
-KM12
-KM11
Volitelné příslušenství / Optional accessories / Optionale zubehör
BOMAR, s.r.o.
Těžební 1236/1
CZ 627 00, Brno
Stroj/Machine/Maschine:
WorkLine 610.450 DGH
Název stránky/Name page/Name seiten:
SynchFree
Číslo dok./Doc.No/Anzahl der Dokumente:
ES-101.333-T3-V5.3
Napájení/Power supply/Einspeisung:
3x230V+PE, 50/60Hz
Zpracoval/Processed /Hat verarbeitet:
Datum/Date/Datum:
17.08.2021
List/Page/Seite: 16
List0/Pages/Seiten: 23
15

6.2. Hydraulické schéma / Hydraulikschema / Hydraulic diagram

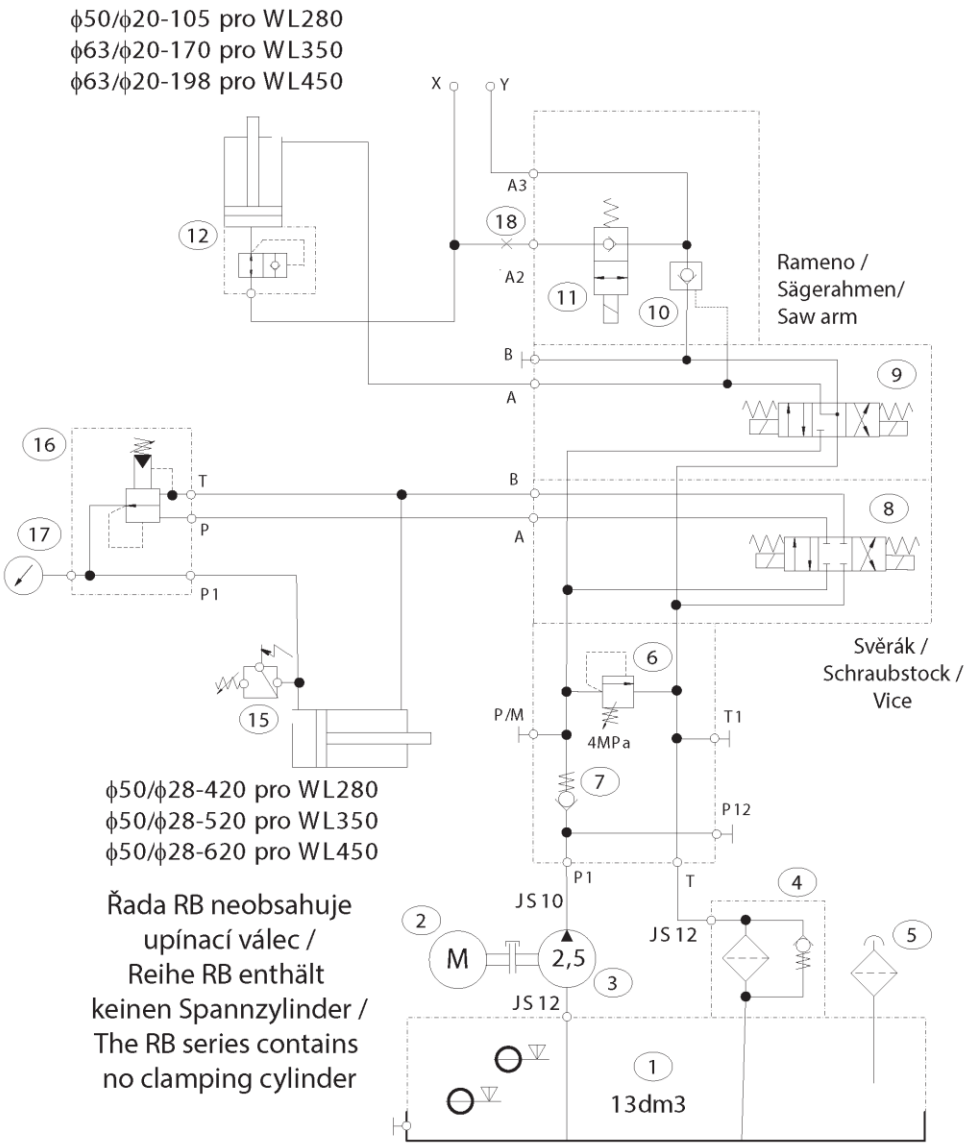

Typ / Type / Type	
Workline 280, 350, 450 var.: NH / GH / DGH, platí také pro řadu RB /auch für die Reihe RB gültig /applies to the RB series as well (280, 350, 450)	
Hydraulický agregát / Hydroaggregat / Hydro aggregat	92.001.069 (FMW), S001-059-5, PPM-AC0,25-PG1/2,5-TM13-CB03-FR
Neuvedené světlosti / Unerwähnt Lichtbreite / Unlisted inside diameters	JS6
Výstupní šroubení / Ausgangschraubung / Output screewing	G1/4"

205.M216-100_V4
WORKLINE 280 var.: NH / GH / DGH
WORKLINE 350 var.: NH / GH / DGH
WORKLINE 450 var.: NH / GH / DGH
11.3.2024

Pmax	4 MPa
Q	3,3 dm³/min
n	1400 ot./min
P	0,25 kW

Regulační závlek stroje vlekosti 450 / Regelungskreis der Anlage für Andruck in den Schnitt, Größe 450 / control circuit for the machine size 450

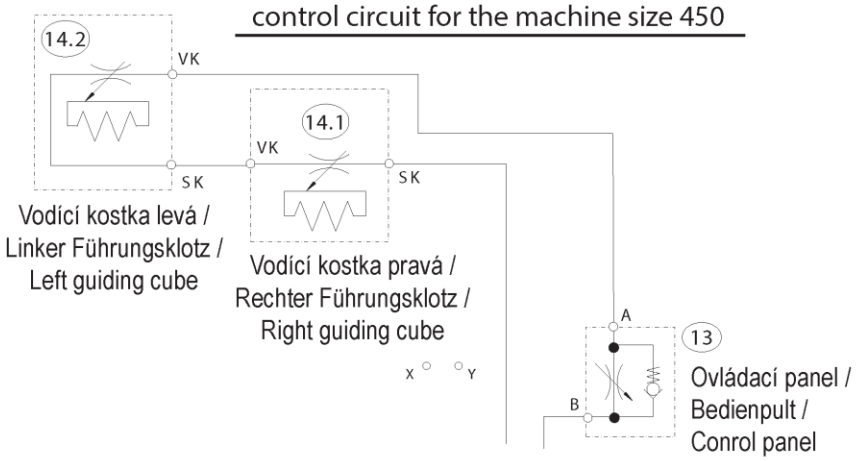

Regulační závlek stroje: / Regelungskreis der Anlage für Andruck in den Schnitt: / Control circuit of the machine: 280 + 350

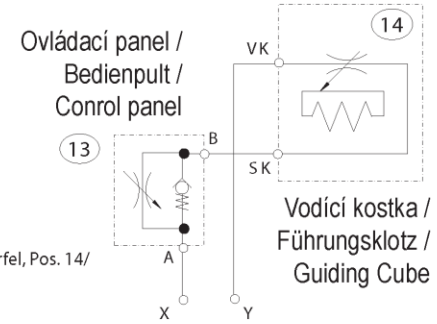

- 2 varianty regulačního závleku okruhu ramena, spojovací body X, Y u strojů velikosti 280 a 350 je pouze jedna kostka poz. 14/
  2 Varianten des Regelungskreises des Sägerahmens für Andruck in den Schnitt, Verbindungspunkte X, Ybei den Anlage Gr. 280 und 350 ist nur ein Würfel, Pos. 14/
  2 versions of the control circuit of the arm, connecting points X, Y for the machine size 280 and 350, there is only one cube, pos.1

- Regulace upínací síly (prvky č. 17+18) jen na přání /
  Regelung der Spannkraft (Elemente Nr. 17+18) nur auf Wunsch des Kunden /
  Clamping force control (elements No. 17+18) by customer's request only

205.M216-100_V4
WORKLINE 280 var.: NH / GH / DGH
WORKLINE 350 var.: NH / GH / DGH
WORKLINE 450 var.: NH / GH / DGH
11.3.2024

Typ / Type / Type

Workline 280, 350, 450 var.: NH / GH / DGH, platí také pro řadu RB / auch für die Reihe RB gültig /applies to the RB series as well (280, 350, 450)

Hydraulický agregát / Hydroaggregat / Hydro aggregat

92.001.069 (FMW), S001-059-4, PPM-AC0,25-PG1/2,5-TM13-CB03-FR

Neuvedené světlosti / Unerwähnt Lichtbreite / Unlisted inside diameters

JS6

Výstupní šroubení / Ausgangschraubung / Output screewing

G1/4"

Platí také pro řadu RB / auch für die Reihe RB gültig / applies to the RB series as well (280, 350, 450)

Pmax	4 MPa
Q	3,3 dm³/min
n	1400 ot./min
P	0,25 kW

Poz.	Název položky		ks
Pos.	Bezeichnung		Menge
Pos.	Item		Pcs.
1	Nádrž / Behälter / Tank	TM13,5/S 13 dm3	1
2	Elektromotor / Elektromotor / Electromotor	EM71 0,25kW/3 B35 400/230V 50Hz	1
3	Hydrogenerátor / Hydraulikgenerator / Hydrogenerator	10A2,5x053G 2,5 cm3/ot.	1
4	Zpětný filtr / Filter / Filter	FILTRON(FI OP643/4)	1
5	Nalévací zátka / Stopfen / Fill stopper	SFP.40-1+F FIL	1
6	Přepouštěcí ventil / Bypaßventil / By pass valve	MO-020/10	1
7	Zpětný ventil / Gegendruckventil / Clack-valve	CVG 14	1
8	Rozváděč / Schaltschrank / Switchboard	DVE03-S01-B4- C24/20/T1-M1	1
9	Rozváděč / Schaltschrank / Switchboard	DVE03-S04-B5- C24/20/T1-M1	1
10	Hydraulický zámek / Hydraulisches Schloß / Hydraulic lock	PC08-30-0-N	1
11	Sedlový ventil / Sattelventil/ Saddle valve	SV08-20-0-N-24EG	1
12	Pojistný ventil / Sicherungventil / Safety valve	VPNH ¼ 92.151.001	1
13	Škrtící ventil / Drosselventil / Throttle-valve	VS01-04/R2-OS 92.152.004	1
14	Kostka regulace / Regulationklotz / Regulation cube	Manual 251.077	2/1
15	Tlakový spínač / Druckschalter / Pressure switch	0166415031059 20-50bar	1
16	Redukční ventil / Reduktionsventil / Control valve	VRN2-06/S-6R 92.154.001	1/0
17	Manometr / Manometer / Manometer	D68, RAD., 0-60bar	1/0

Attention!

The saw arm must always be in the down position after finishing work and resting or during longer intervals between cuts or at night. Otherwise there is a risk of damage to the hydraulic part of the saw arm.

All material must be removed from the saw area. (Risk of damage to the saw blade)

7. Výkresy sestav pro objednání náhradních dílů

- Při objednávání náhradních dílů vždy uvádějte: typ stroje (např. Workline 610.450 DGH) , výrobní číslo (např. 125) a rok výroby (např. 1999).

- In die Bestellung der Ersatzteile führen Sie immer an: Maschinentyp (z. B. Workline 610.450 DGH), Serien Nr. (z. B. 125) und Baujahr (z. B. 1999).

- For spare parts order, you must always to allege: type of machine (for example Workline 610.450 DGH), serial number (for example 125, see cover page) and year of construction (for example 1999).

7.1. WORKLINE 610.450 DGH

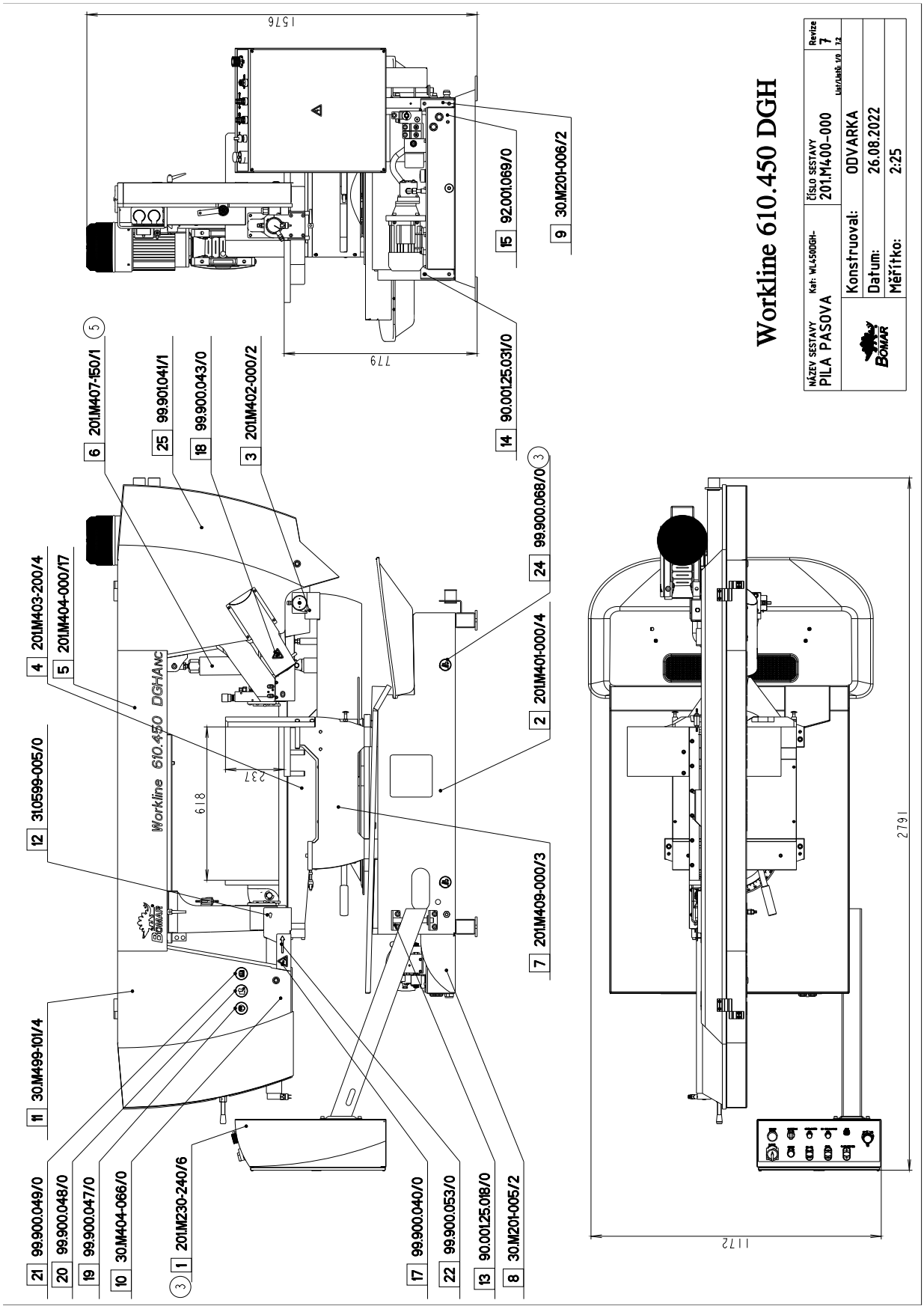

NÁZEV SESTAVY	ČÍSLO SESTAVY	REVIZE	Kategorie: WL450DGH-	
PILA PASOVA	201.M400-000 List/Listů: 2/0	7 7.2	Datum: 26.08.2022	Konstruktér: ODVARKA

-

pos.	číslo výkresu	verze	množství	název	polotovar	jakost	pov.upr.	váha	poznámka
1	201.M230-240 (3)	6	1	OVLADACI PANEL				20.5	
2	201.M401-000	4	1	PODSTAVEC				146.3	
3	201.M402-000	2	1	KONZOLA OTOCNA				57.4	
4	201.M403-200	4	1	SVERAK	SESTAVA SESTAVA			77.8	
5	201.M404-000	17	1	RAMENO				385.9	
6	201.M407-150 (5)	1	1	VALEC ZVEDACI	SESTAVA	SESTAVA		6.4	
7	201.M409-000	3	1	PODSTAVEC SVERAKU	SESTAVA			140.1	
8	30.M201-005	2	1	DRZAK	P4 - 173x278 40.001.01.28	S235	KOM 7015 STR.	1.3	
9	30.M201-006	2	1	DRZAK	P4 - 173x278 40.001.01.28	S235	KOMAXIT 7015 SRT.	1.3	
10	30.M404-066 (4)	0	1	KRYT PASU	SVARENO	SVARENO	KOM 1021	1.6	
11	30.M499-101	4	1	STITEK TYPOVY	P 0.5x65 - 76 30.M299-110			0.0	
12	31.0599-005 (7)	0	2	STITEK	pozor svěrák 40x35 mm			0.0	
13	90.001.25.018	0	2	SROUB IMBUS	6x20 DIN 912 8,8 černěný			0.0	
14	90.001.25.031	0	4	SROUB IMBUS	8x16 DIN 912 8,8 černěný			0.0	
15	92.001.069	0	1	AGREGAT HYDRAULICKY	S001_059_5 * WorkLine 280,350,450 GH,DGH,NH, TR330,440 2,5wTM16-CB03-FR			0.0	
17	99.900.040 (4)	0	1	SAMOLEPKA	NR Nebezpečí říznutí			0.0	
18	99.900.043 (7)	0	1	SAMOLEPKA	NZ Nebezpečí zachycení			0.0	
19	99.900.047	0	1	SAMOLEPKA	OBS Noste brýle sluchátka			0.0	
20	99.900.048	0	1	SAMOLEPKA	PO Noste pevnou prac.obuv			0.0	
21	99.900.049 (4)	0	1	SAMOLEPKA	CN Přečíst návod k použit			0.0	
22	99.900.053	0	1	SAMOLEPKA	SŠ - Směrová šipka			0.0	
24	99.900.068 (3)	0	4	SAMOLEPKA	vozik			0.0	
25	99.901.041	1	1	SAMOLEPKA	WORKLINE 610.450 DGHANC new od 3_2013			3.0	

INDEX ZMĚNA DATUM PODPIS

1.ZRUS.OVLADACI PANEL 201.M230-100 A NAHR.201.M230-150 . 061/ZM110 28.3.2012 SLEZACKOVA
2.ZRUSEN BLOK 92.153.005. 019/ZM022 7.2.2014 SLEZACKOVA
3.ZRUS.OVLADACI PANEL 201.M230-150 A NAHR.201.M230-240,PRID.SAMOLEPKA 99.900.068. 055,263/ZM084 25.3.2014 SLEZACKOVA
4.PRID.KRYT PASU 30.M404-066,SAMOLEPKY - 1x99.900.053,1x99.900.040,1x99.901.032. 017/ZM181 21.8.2015 SLEZACKOVA
5.ZRUS. VALEC ZVEDACI 201.M407-050 A NAHR. 201.M407-150. 258/ZM422 4.12.2018 SZABARI
6.ZRUS. CERTIFIKACNI ZNACKA TUV SUD 99.901.032 282/ZM197 29.6.2021 KOVAR
7.PRIDANA NALEPKA 31.0599-005 A 99.900.043. 197ZM211 17.6.2022 JAGNESAK
8.ZRUS.SAMOLEPKA 99.900.055. 180/ZM264 16.11.2023 CHUCHRO

Číslo Sestavy/Number of assembly/Nummer der Baugruppe; Verze (Ver.)/Version/Version; Název sestavy/Assembly name/Name der Baugruppe; Datum/Date/Datum; Kontrukter/Designer/Konstrukteur;Číslo výkresu/Drawing number/Zeichnung nummer; Název/Name/Name; Polotovar/Semiproduct/Halbfabrikat; Vstupní materiál(Vstupní mat.)/Default material/Eingangsmaterial; Jakost/Norm/Norm; Pov. úpr./Surface finish/Oberflächengüte;Váha/Weight/Gewicht; Poznámka/Note/Notiz

7.3. Ovladací panel / Control panel / Bedienpult

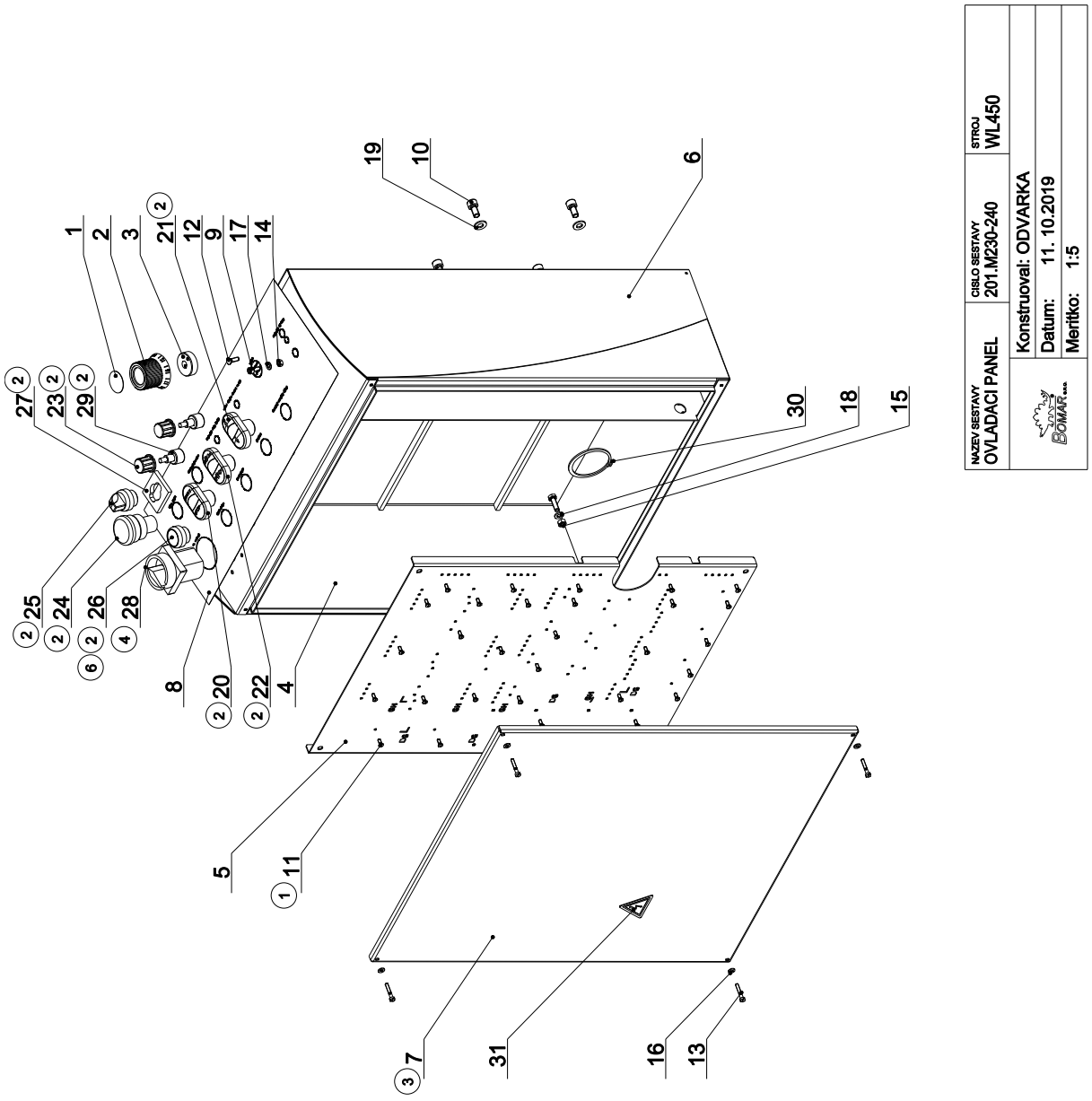

7.4. Kusovník / Piece list / Stückliste - Ovladací panel / Control panel / Bedienpult

Cislo Sestavy	Ver.	Nazev sestavy
201.M230-240	0	OVLADACI PANEL/CONTROL PANEL/BEDIENPULT

Poz.	Objednaci cislo	Ver.	Nazev polozky	Rozmer	Ks
1	30.6130-012	0	VIKO / COVER / DECKEL	P 0,5x30	1
2	30.6130-018	0	HLAVICE / HEAD / KOPF	VYLISEK	1
3	30.M230-006	0	MEZIKUS / INSERTED PIECE / EINGESETZTES STÜCK	d 32	1
4	30.M230-201	0	SKRIN / BOX / KASTEN		1
5	30.M230-202	0	PANEL / PANEL / PANEL	P 1.5x425	1
6	30.M230-204	0	PLECH / SHEET METAL / BLECH	P 1x188	2
7	30.M230-206 (3)	0	VIKO / COVER / DECKEL		1
8	31.M230-209	0	SAMOLEPKA / STICKER / AUFKLEBER	171	1
9	90.001.25.008	0	SROUB IMBUS / HEXAGON SOCKET SCREW / IMBUSSCHRAUBE	M5X12	1
10	90.001.25.031	0	SROUB IMBUS / HEXAGON SOCKET SCREW / IMBUSSCHRAUBE	8x16	4
11	90.010.50.008 (1)	0	SROUB DO PLECHU / SHEET-METAL BOLT / BLECHSCHRAUBE	SROUB 3,9x9,5	31
12	90.011.27.022	0	SROUB ZAPUSTNY / COUNTERSUNK SCREW / SENKSCHRAUBE	SROUB M5X16	1
13	90.012.50.006	0	SROUB VALCOVY / CYLINDER HEAD BOLT / ZYLINDERKOPFSCHRAUBE	SROUB M4X25	4
14	90.100.55.003	0	MATICE PRESNA ZINEK / PRECISION NUT - ZN / PRÄZISE MUTTER - ZN	MATICE _ M5	1
15	90.100.55.004	0	MATICE PRESNA ZINEK / PRECISION NUT - ZN / PRÄZISE MUTTER - ZN	MATICE _ M6	4
16	90.150.50.002	0	PODLOZKA / WASHER / UNTERLEGSCHEIBE	PODLOZKA 4,3	4
17	90.150.50.003	0	PODLOZKA / WASHER / UNTERLEGSCHEIBE	PODLOZKA 5,3	1
18	90.150.50.004	0	PODLOZKA / WASHER / UNTERLEGSCHEIBE	PODLOZKA 6,4	4
19	90.150.50.005	0	PODLOZKA / WASHER / UNTERLEGSCHEIBE	PODLOZKA 8,4	4
20	91.060.034 (2)	0	HLAVICE / HEAD / KOPF	START/STOP	1
21	91.060.054 (2)	0	HLAVICE / HEAD / KOPF	NAHORU/DOLU	1
22	91.060.055 (2)	0	HLAVICE / HEAD / KOPF	SV. ZAVR/OTEV	1
23	91.060.063 (2)	0	HLAVICE / HEAD / KOPF	S8877 BLK	2
24	91.060.084 (2)	0	HLAVICE TOTAL STOP / TOTAL STOP HEAD / TASTE TOTAL STOP		1
25	91.060.087 (2)	0	HLAVICE / HEAD / KOPF		1
26	91.060.132 (2) (6)	0	HLAVICE / HEAD / KOPF		1
27	91.061.045 (2)	0	DIL PROPOJOVACI / CONNECTING PART / VERBINDUNGSTEIL		1
28	91.170.028 (4)	0	VYPINAC / SWITCH / SCHALTER	VYPINAC	1
29	91.283.015 (2)	0	POTENCIOMETR / POTENTIOMETER / POTENTIOMETER	TP 195 4K7/N 20A	2
30	95.800.034 (5)	0	KROUZEK POJIST.VNEJS / EXTERNAL RETAINING RING / SICHERUNGSRING AUßEN	POJISTNY KROUZEK 55	1

Cislo Sestavy/Number of assembly/Nummer der Baugruppe; Verze (Ver.)/Version/Version; Nazev sestavy/Assembly title/Name der Baugruppe; Pozice (Poz.)/Position/Position;
Objednaci cislo/Purchase order number/Bestellnummer; Nazev polozky/Volume title/Name der Position; Rozmer/Stock size/Abmessung

7.5. Ovladací panel / Control panel / Bedienpult

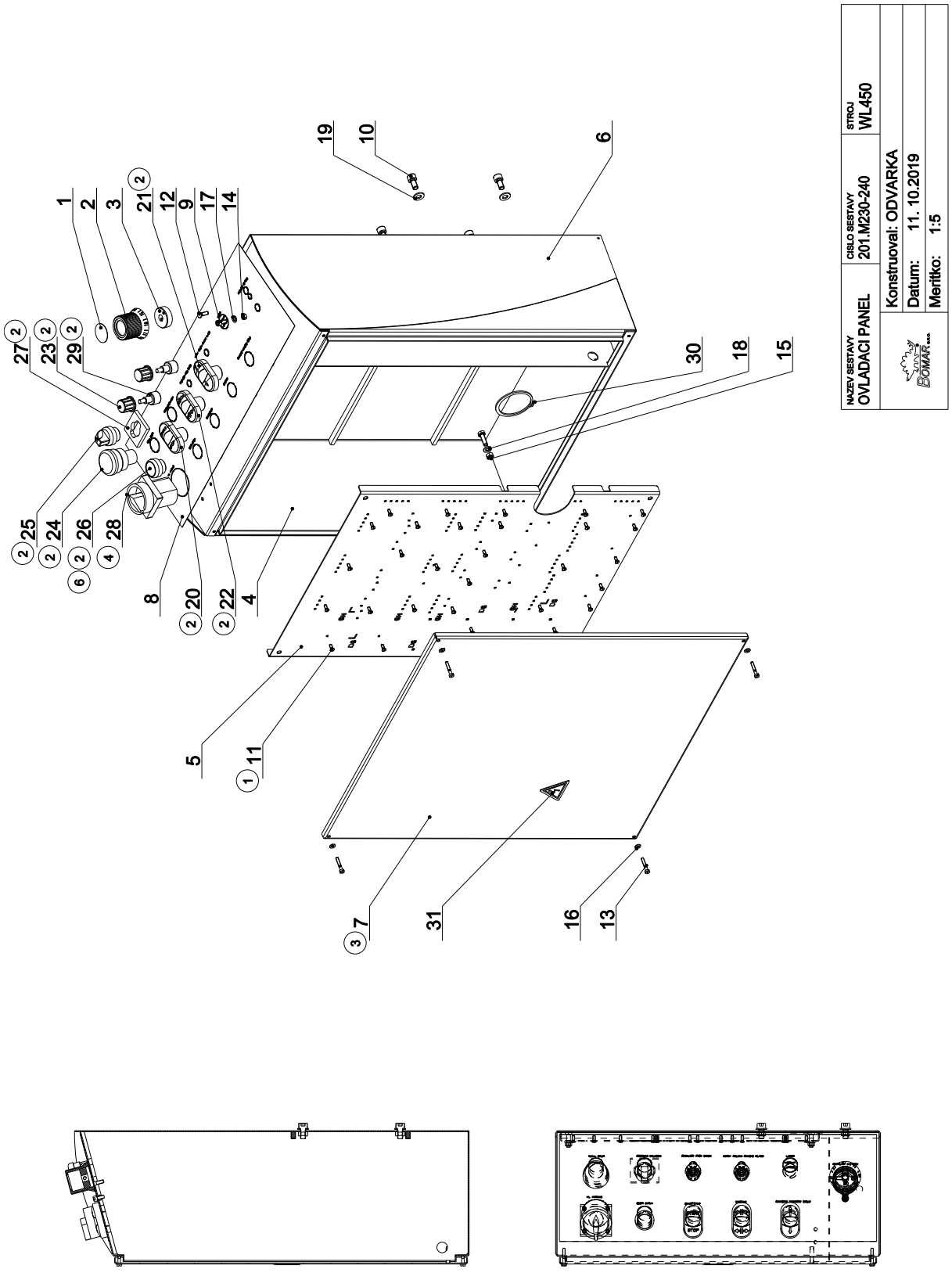

31	99.900.045	0	SAMOLEPKA / STICKER / AUFKLEBER		1

1.PRIDANO 30 SROUBU DO PLECHU 3,9x9,5(90.010.50.008,DIN7981.F). 012/ZM012 27.1.2015 SLEZACKOVA
2.DOPLNENY SOUCASTI 91.180.018,91.170.018,91.060.053,91.060.034,91.060.055,91.060.054,91.060.084,91.061.61.045,91.060.087,2x91.060.063,2x91.283.015. 050/ZM036 5.3.2015 SLEZACKOVA
3.ZRUSENO VIKO 30.M230-203 A NAHR.30.M203-206. 056/ZM258 11.8.2017 SLEZACKOVA
4.ZRUS.91.180.018, 91.170.018 A NAHR. 1xVYPINAC 91.170.028; 115/ZM213 29.6.2018 SCERBA
5.ZR.VENTIL 92.152.004 NAHR. 92.152.024. 302/ZM421 11.10.2019 KOSYK
6.ZRUS. 91.060.053 A NAHR. 91.060.132 141/ZM225 14.7.2021 KOVAR

Cislo Sestavy/Number of assembly/Nummer der Baugruppe; Verze (Ver.)/Version/Version; Nazev sestavy/Assembly title/Name der Baugruppe; Pozice (Poz.)/Position/Position;
Objednaci cislo/Purchase order number/Bestellnummer; Nazev polozky/Volume title/Name der Position; Rozmer/Stock size/Abmessung

7.7. Podstavec / Base / Untersatz

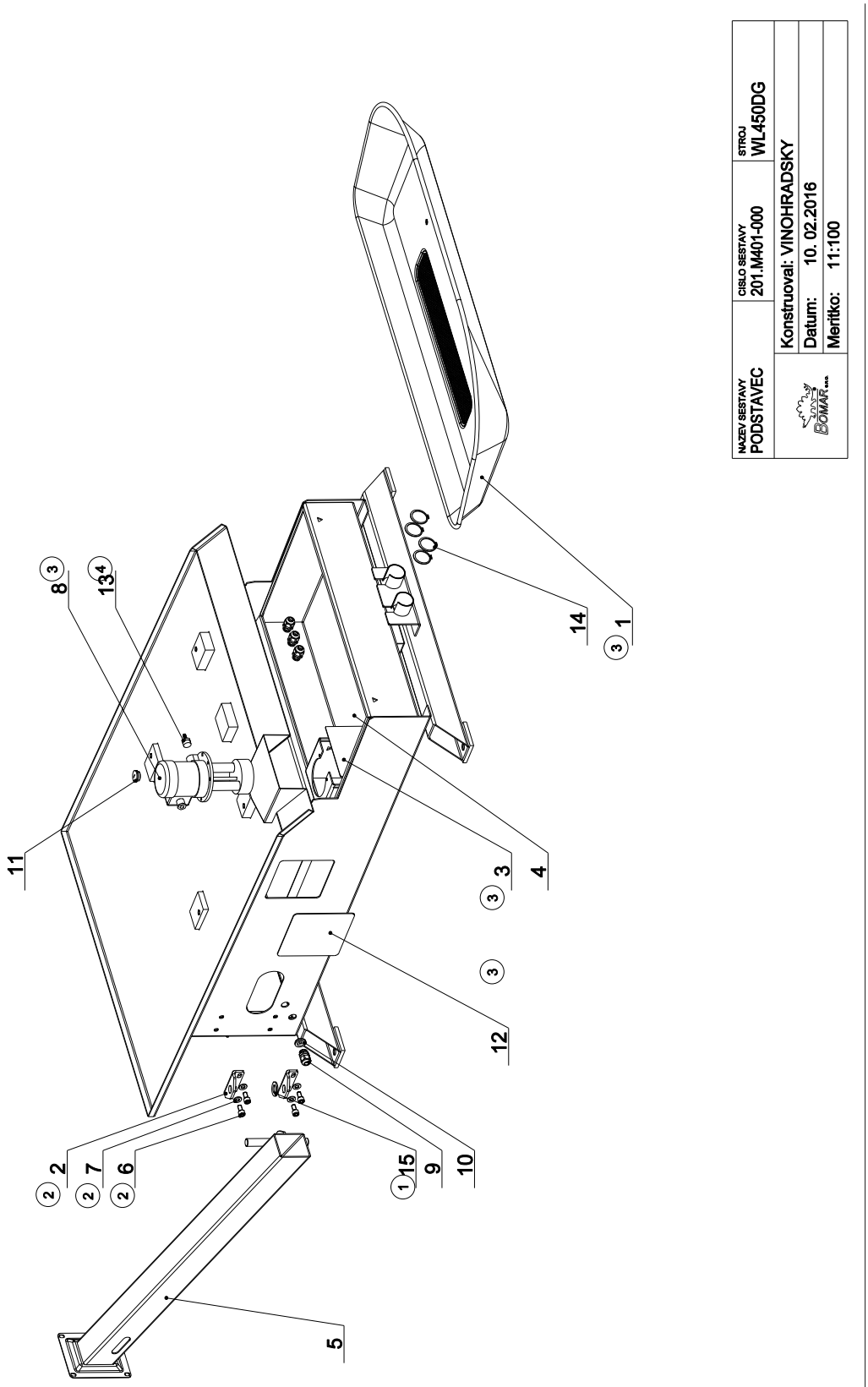

Cislo Sestavy	Ver.	Nazev sestavy
201.M401-000	0	PODSTAVEC/BASE/UNTERSATZ

Poz.	Objednaci cislo	Ver.	Nazev polozky	Rozmer	Ks
1	201.M201-020 (3)	0	VANA / TANK / WANNE		1
2	30.M201-011 (2)	0	KONZOLA / BRACKET / KONSOLE	P 6x74	2
3	30.M201-015 (3)	0	PLECH / SHEET METAL / BLECH	P 1,5x119	1
4	30.M401-001	0	PODSTAVEC / BASE / UNTERSATZ		1
5	30.M401-004	0	KONZOLA / BRACKET / KONSOLE		1
6	90.001.25.046 (2)	0	SROUB IMBUS / HEXAGON SOCKET SCREW / IMBUSSCHRAUBE	M10X20	4
7	90.150.50.006 (2)	0	PODLOZKA / WASHER / UNTERLEGSCHEIBE	PODLOZKA 10,5	4
8	91.020.032 (1)	0	CERPADLO CHLAZENI / COOLING PUMP / KÜHLMITTELPUMPE	230/400V	1
9	91.070.012 (3)	0	VYVODKA KLESTINOVA / COLLET WITH OUTLET / SPANNZANGENTÜLLE	M20x1.5	4
10	91.072.012	0	MATICE CERNA / BLACK NUT / MUTTER ROH		1
11	91.074.013	0	UCPAVKA / PLUG / ABDICHTUNG	M25x1,5	1
12	94.101.039	0	ZATKA / PLUGBLIND PLUG / BLINDSTOPFEN	154x154x4	1
13	94.202.020	0	REDUKCE / REDUCTION / ADAPTOR / REDUKTION	1/2"-6	1
14	95.800.016 (4)	0	KROUZEK POJIST.VNEJS / EXTERNAL RETAINING RING / SICHERUNGSRING AUßEN	POJISTNY KROUZEK 42	4
15	DIN125_21	0	PODLOZKA / WASHER / UNTERLEGSCHEIBE	PODLOZKA 21	1

1. NAHRADA LOZISKOVYCH DOMECKU ZA KOSTKY 30.M201-007, DOPL. DESKA 30.M201-008, PODLOZKA 90.150.50.011 A SROUB 90.001.25.046 174/ZM205 8.8.2011 ODVARKA

2.ZRUS.DRZAK 30.M201-007 A NAHR.30.M201-011,ZRUS.DRZAK 30.M201-008,ZRUS.SROUB M10x60(90.001.25.054) A NAHR.SROUBEM M10x20(90.001.25.046)PRID.PODLOZKA 10,5(90.150.50.006),PRID.KRYT 30.M201-014.213/ZM279 14.12.2015 SLEZACKOVA

3.ZRUS.VANA 30.M201-010 A NAHR.201.M201-020,ZRUS.PLECH 30.M201-014 A NAHR.30.M201-015,ZRUS.KLUZ 30.M301-020. ZRUS.CERPADLO 91.020.004 A NAHR.91.020.032,PRID.REDUKCE 94.202.021.213/ZM022 10.2.2016 SLEZACKOVA

4.ZRUS.REDUKCE 94.202.021 A NAHR.94.202.020. 088/ZM165 31.5.2016 SLEZACKOVA

Cislo Sestavy/Number of assembly/Nummer der Baugruppe; Verze (Ver.)/Version/Version; Nazev sestavy/Assembly title/Name der Baugruppe; Pozice (Poz.)/Position/Position;
Objednaci cislo/Purchase order number/Bestellnummer; Nazev polozky/Volume title/Name der Position; Rozmer/Stock size/Abmessung

7.9. Vana/ tank/ Wanne

Cislo Sestavy	Ver.	Nazev sestavy
201.M201-020	0	VANA/TANK/WANNE

Poz.	Objednaci cislo	Ver.	Nazev polozky	Rozmer	Ks
1	30.ER251-304	0	SITO / SIEVE / GITTERWERK	P1x95	1
2	30.M201-021	0	VANA / TANK / WANNE	P 0.8	1

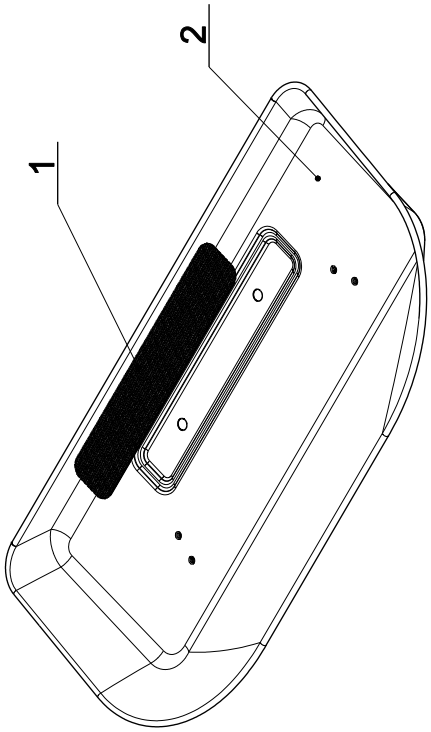

Cislo Sestavy/Number of assembly/Nummer der Baugruppe; Verze (Ver.)/Version/Version; Nazev sestavy/Assembly title/Name der Baugruppe; Pozice (Poz.)/Position/Position;
Objednaci cislo/Purchase order number/Bestellnummer; Nazev polozky/Volume title/Name der Position; Rozmer/Stock size/Abmessung

7.10. Konzola otočná / Turnable consol / Drehkonsole

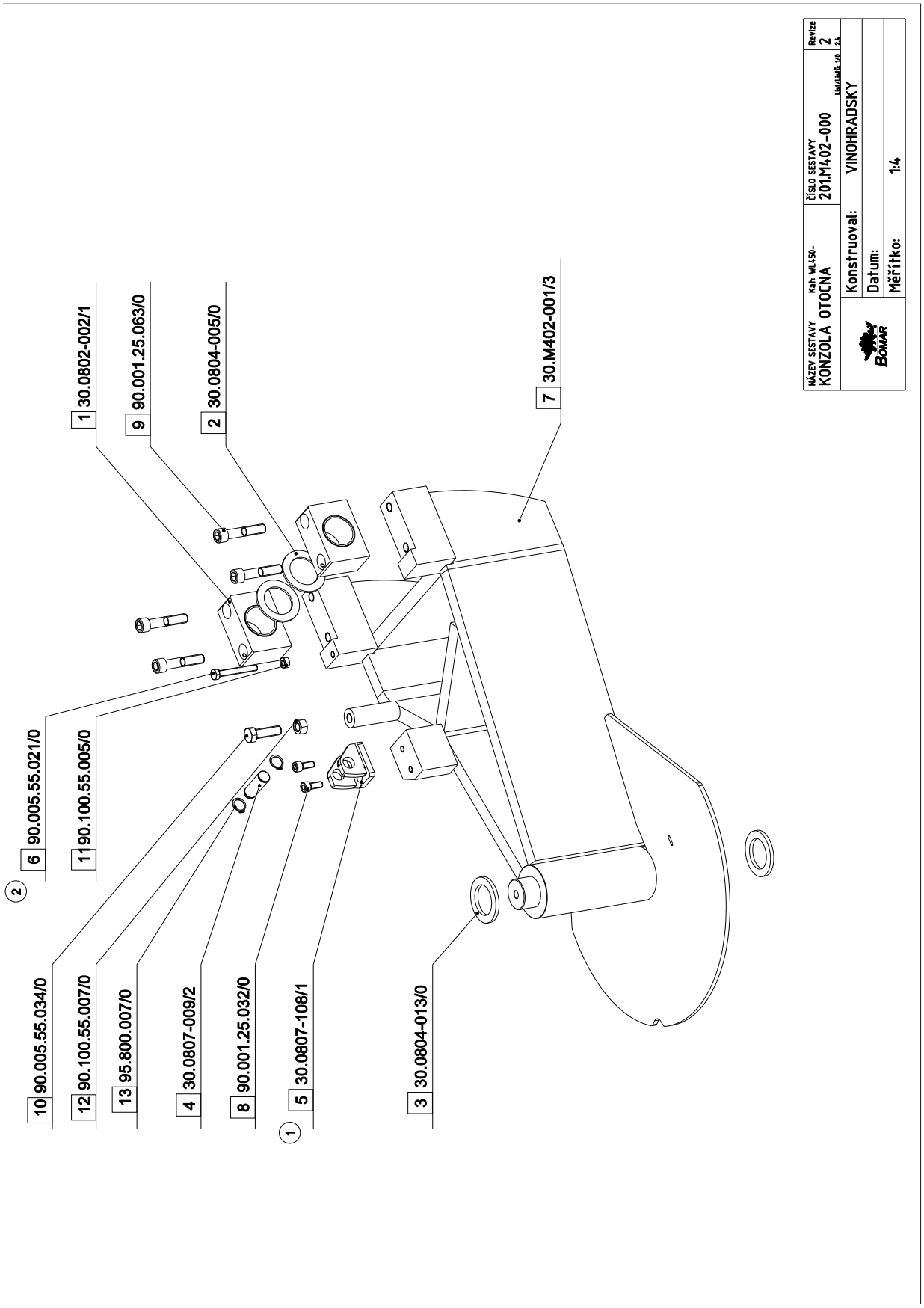

7.11. Kusovník / Piece list / Stückliste - Konzola otočná / Turnable consol / Drehkonsole

NAZEV SESTAVY	CISLO SESTAVY	REVIZE
KONZOLA OTOCNA	201.M402-000	2

Poz.	Objednací číslo	Verze	Název CZ	Name EN	Name DE	Polotovar	Ks.
1	30.0802-002	1	LOZISKO	BEARING	LAGER		2
2	30.0804-005	0	KROUZEK	RING	RING	P3 - 60x60	2
3	30.0804-013	0	KROUZEK	RING	RING	P5 - 60x60	2
4	30.0807-009	2	CEP	PIVOT	BOLZEN	D16 - 51	1
5	30.0807-108	1	DRZAK	HOLDER	HALTER		1
6	90.005.55.021	0	SROUB 6HRANNY	HEX HEAD SCREW	SECHSKANTSCHRAUBE	8x60	1
7	30.M402-001	3	KONZOLA OTOCNA	PIVOT BRACKET	DREHKONSOLE		1
8	90.001.25.032	0	SROUB IMBUS	HEXAGON SOCKET SCREW	IMBUSSCHRAUBE	8x20	2
9	90.001.25.063	0	SROUB IMBUS	HEXAGON SOCKET SCREW	IMBUSSCHRAUBE	12x60	4
10	90.005.55.034	0	SROUB 6HRANNY	HEX HEAD SCREW	SECHSKANTSCHRAUBE	12x40	1
11	90.100.55.005	0	MATICE PRESNA ZINEK	PRECISION NUT - ZN	PRÄZISE MUTTER - ZN	8	1
12	90.100.55.007	0	MATICE PRESNA ZINEK	PRECISION NUT - ZN	PRÄZISE MUTTER - ZN	12	1
13	95.800.007	0	KROUZEK POJIST.VNEJS	EXTERNAL RETAINING RING	SICHERUNGSRING AUßEN	d16	2

1.ZRUS. DRZAK 30.M202-008 A NAHR. DRZAKEM 30.0807-108. 280/ZM392 25.10.2021 KOVAR
2.ZRUS.SROUB 30.0808-007 A NAHR.9SROUBEM M8x60 (90.005.55.021). 118/ZM254 21.9.2022 SLEZACKOVA

Číslo Sestavy/Number of assembly/Nummer der Baugruppe; Ver.-Verze/Version/Version; Název sestavy/Assembly name/Name der Baugruppe;; Poz.-Pozice/Position/Position; Objednací číslo/Order number/Bestellnummer; Polotovar/Semiproduct/Halbfabrikat; Vstupní materiál(Vstupní mat.)/Default material/Eingangsmaterial;

7.12. Svěrák / Vice /Schraubstock

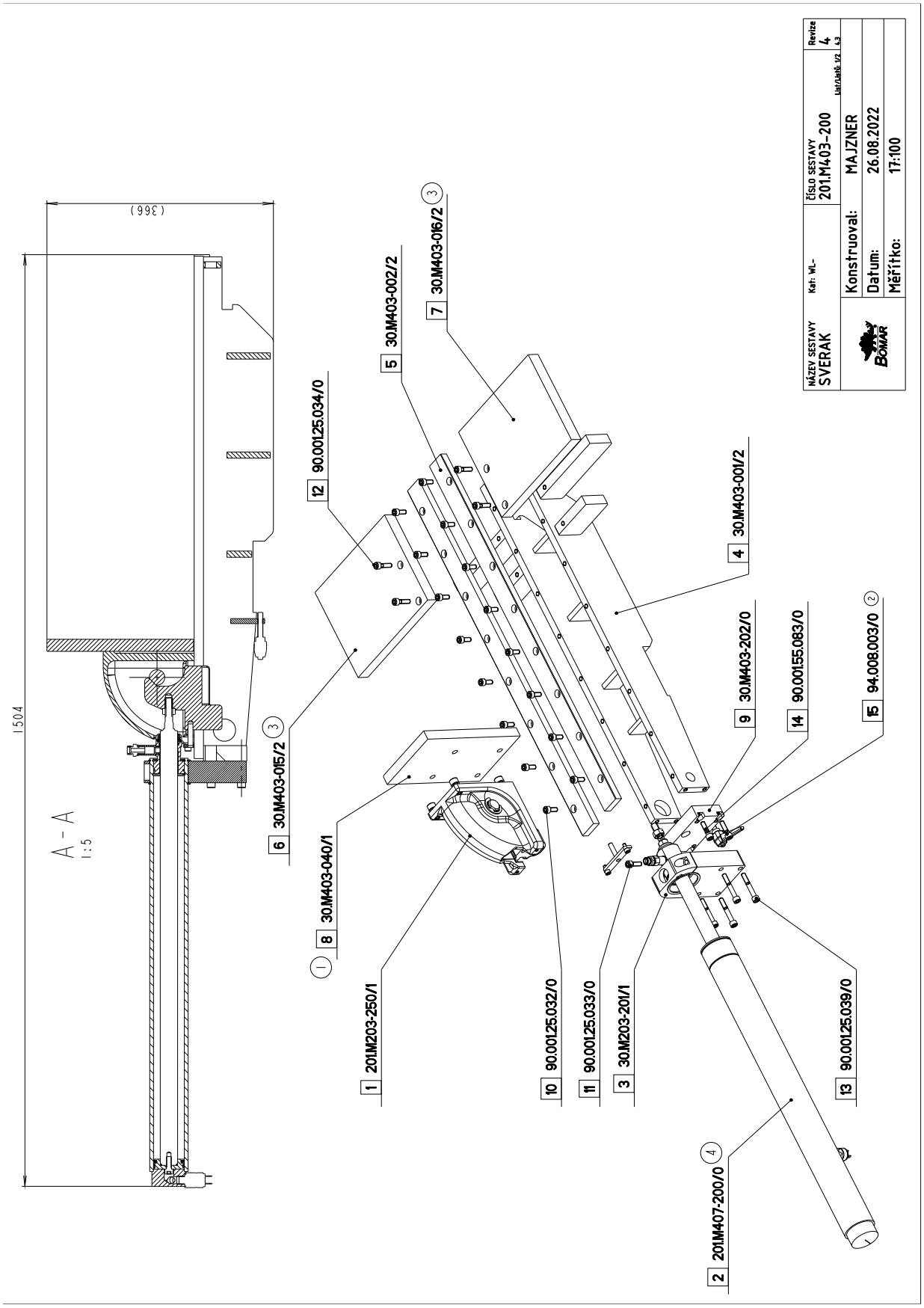

7.13. Kusovník / Piece list / Stückliste - Svěrák / Vice /Schraubstock

NAZEV SESTAVY	CISLO SESTAVY	REVIZE
SVERAK	201.M403-200	4

rpt.index

Poz.	Objednací číslo	Verze	Název CZ	Name EN	Name DE	Polotovar	ks/m
1	201.M203-250	1	SVERAK	VICE	SCHRAUBSTOCK		1
2	201.M407-200 (4)	0	VALEC SVERAKU	VICE CYLINDER	SCHRAUBSTOCKZYLINDER		1
3	30.M203-201	1	DESKA	BOARD	PLATTE		1
4	30.M403-001	2	TELESO SVERAKU	VICE BODY	SCHRAUBSTOCKKÖRPER		1
5	30.M403-002	2	LISTA VODICI	GUIDING SLAT	FÜHRUNGSLEISTE	HR40x15 - 813	2
6	30.M403-015 (3)	2	DESKA	BOARD	PLATTE	HR250x25 - 200	1
7	30.M403-016 (3)	2	DESKA	BOARD	PLATTE	HR250x25 - 200	1
8	30.M403-040 (1)	1	DESKA	BOARD	PLATTE	HR150x20 - 240	1
9	30.M403-202	0	DESKA	BOARD	PLATTE	HR120x25 - 70	1
10	90.001.25.032	0	SROUB IMBUS	HEXAGON SOCKET SCREW	IMBUSSCHRAUBE	8x20 DIN 912 8,8 černěný	16
11	90.001.25.033	0	SROUB IMBUS	HEXAGON SOCKET SCREW	IMBUSSCHRAUBE	8x25 DIN 912 8,8 černěný	1
12	90.001.25.034	0	SROUB IMBUS	HEXAGON SOCKET SCREW	IMBUSSCHRAUBE	8x30 DIN 912 8,8 černěný	4
13	90.001.25.039	0	SROUB IMBUS	HEXAGON SOCKET SCREW	IMBUSSCHRAUBE	8x55 DIN 912 8,8 černěný	4
14	90.001.55.083	0	SROUB IMBUS	HEXAGON SOCKET SCREW	IMBUSSCHRAUBE	8x30 DIN 912 8,8 Zn	4
15	94.008.003 (2)	0	PAKA MONTAZNI	ASSEMBLY LEVER	MONTAGEHEBEL	M8x40 Elesa MRX.63 p	1

1.ZRUS.DESKA 30.M403-032 A NAHR.30.M403-040. 181/ZM231 19.7.2012 SLEZACKOVA
2.PRIDANA PAKA 94.008.003; 107/ZM202 21.6.2018 SCERBA
3.UPRAVA TVARU DESKY 30.M403-015 A 30.M403-016; 331/ZM044 4.2.2022 SLEZACKOVA
4.ZRUS.VALEC SVERAKU 201.M407-100 A NAHR.201.M407-200. 206/ZM255 6.11.2023 SLEZACKOVA

Číslo Sestavy/Number of assembly/Nummer der Baugruppe; Ver.-Verze/Version/Version; Název sestavy/Assembly name/Name der Baugruppe;; Poz.-Pozice/Position/Position; Objednací číslo/Order number/Bestellnummer; Polotovar/Semiproduct/Halbfabrikat; Vstupní materiál(Vstupní mat.)/Default material/Eingangsmaterial;

7.14. Svěrák / vice / Schraubstock

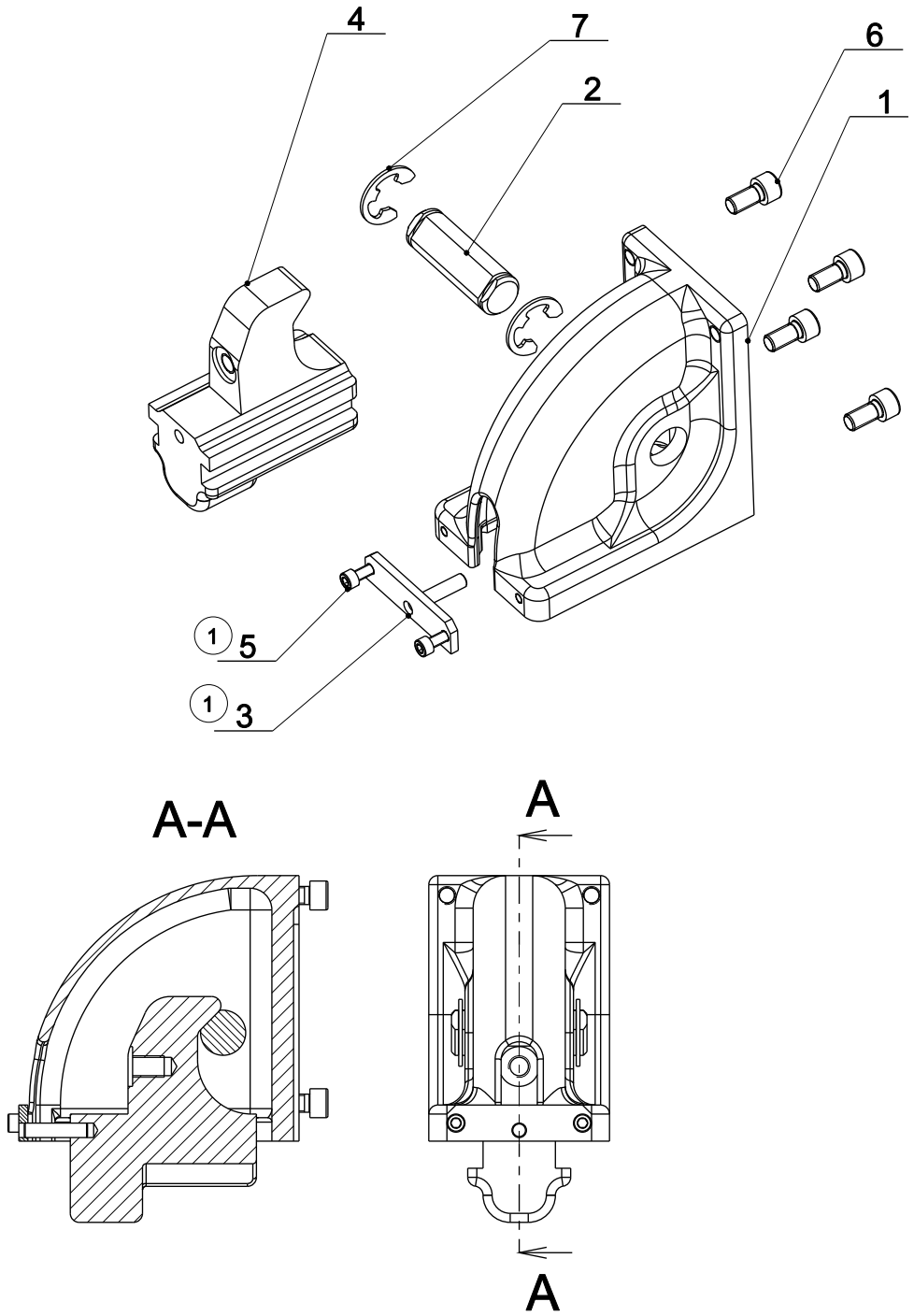

NAZEV SESTAVY	CISLO SESTAVY	STROJ
SVERAK	201.M203-250	WL
BOMAR s.r.o.	Konstruoval: MAJZNER	
	Datum: 19. 07.2012	
	Meritko: 33:100	

Cislo Sestavy	Ver.	Nazev sestavy
201.M203-250	0	SVERAK/VICE/SCHRAUBSTOCK

Poz.	Objednaci cislo	Ver.	Nazev polozky	Rozmer	Ks
1	30.M203-003	0	TELESO SVERAKU / VICE BODY / SCHRAUBSTOCKKÖRPER	ODLITEK	1
2	30.M203-005	0	CEP / PIVOT / BOLZEN	D 25	1
3	30.M203-042 (1)	0	DESKA / BOARD / PLATTE		1
4	30.M203-251	0	DORAZ / STOP PIECE / ANSCHLAG	ODLITEK	1
5	90.001.25.016 (1)	0	SROUB IMBUS / HEXAGON SOCKET SCREW / IMBUSSCHRAUBE	M6X12	2
6	90.001.25.046	0	SROUB IMBUS / HEXAGON SOCKET SCREW / IMBUSSCHRAUBE	M10X20	4
7	95.802.005	0	PODLOZKA POJISTNA / SAFETY WASHER / SICHERUNGSSCHEIBE	POJISTNY KROUZEK 19	2

1.ZRUSEN 2x STAVECI SROUB 90.004.2D.004, PRIDANA DESKA 30.M203-042, SROUB M6x12 90.001.25.016, 182/ZM232, 18.7.2012, ODVARKA

Cislo Sestavy/Number of assembly/Nummer der Baugruppe; Verze (Ver.)/Version/Version; Nazev sestavy/Assembly title/Name der Baugruppe; Pozice (Poz.)/Position/Position;
Objednaci cislo/Purchase order number/Bestellnummer; Nazev polozky/Volume title/Name der Position; Rozmer/Stock size/Abmessung

7.16. Válec svěráku / Vice cylinder / Schraubstockzylinder

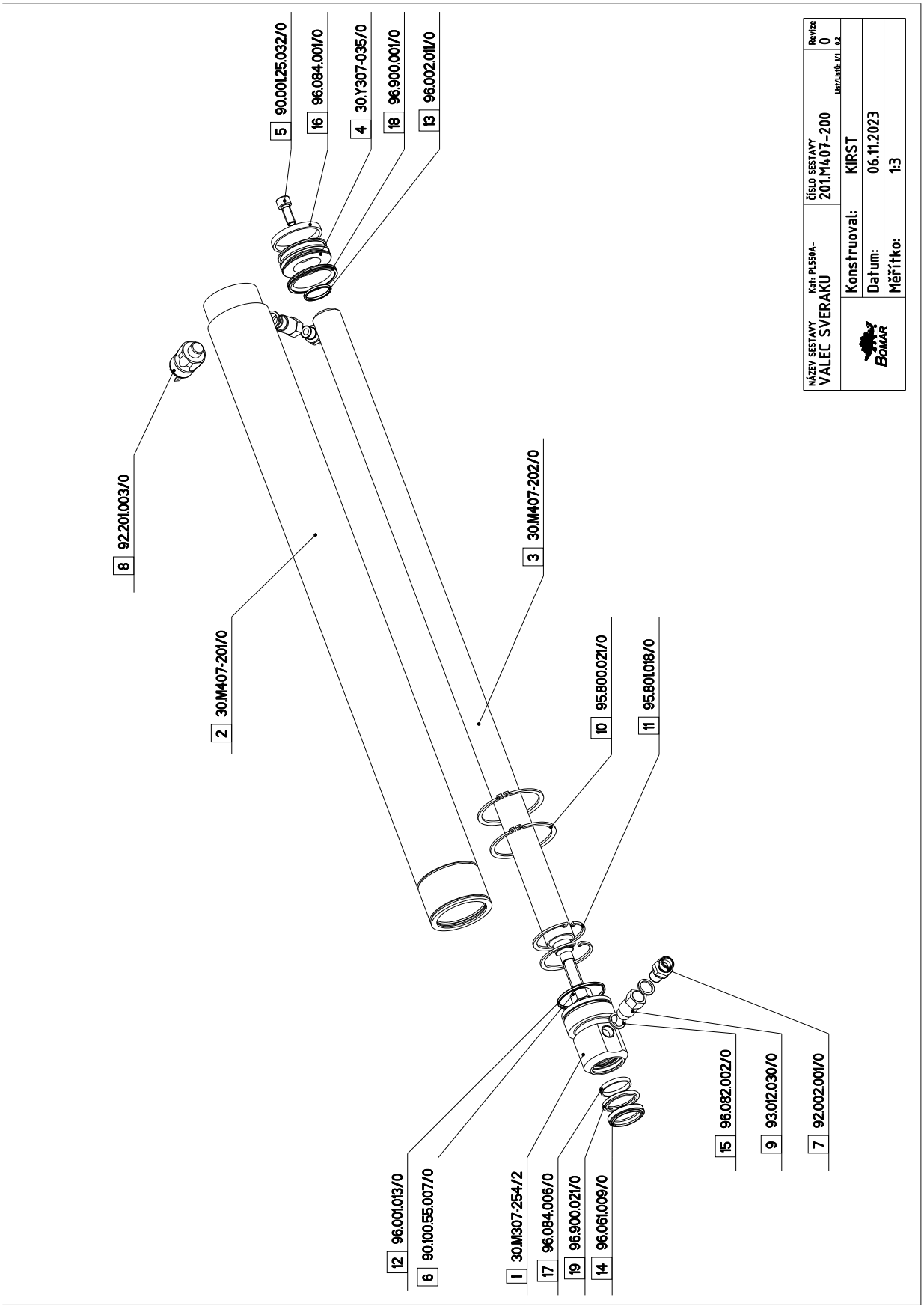

7.17. Kusovník / Piece list / Stückliste - Válec svěráku / Vice cylinder / Schraubstockzylinder

NAZEV SESTAVY	CISLO SESTAVY	REVIZE
VALEC SVERAKU	201.M407-200	0

Poz.	Objednací číslo	Verze	Název CZ	Name EN	Name DE	Polotovar	ks/m
1	30.M307-254	2	VIKO	COVER	DECKEL	D52 - 65	1
2	30.M407-201	0	VALEC	CYLINDER	ZYLINDER		1
3	30.M407-202	0	PISTNICE	PISTON ROD	KOLBENSTANGE	D28 - 756	1
4	30.Y307-035	0	PIST	PISTON	KOLBEN	D55 - 17	1
5	90.001.25.032	0	SROUB IMBUS	HEXAGON SOCKET SCREW	IMBUSSCHRAUBE	8x20 DIN 912 8,8 černěný	1
6	90.100.55.007	0	MATICE PRESNA ZINEK	PRECISION NUT - ZN	PRÄZISE MUTTER - ZN	12 DIN 934 8,8 Zn	1
7	92.002.001	0	SROUBENI PRIME	TUBE FITTING - STRAIGHT	GERADE VERSCHRAUBUNG	GES 08LR WD (změna na WD od 1_2019) 1/4" - 14x1,5 tělo+těsnění	2
8	92.201.003	0	SPINAC TLAKOVY	PRESSURE SWITCH	DRUCKSCHALTER	20-50bar, spínací, G1/4" 0166-415-03-1-059, 29661800 /// 661503	1
9	93.012.030	0	SROUBENI PRIME	TUBE FITTING - STRAIGHT	GERADE VERSCHRAUBUNG	2070 - 1/4 - 1/4 - L35 1/4" vnitřní - 1/4" vnějš	2
10	95.800.021	0	KROUZEK POJIST.VNEJS	EXTERNAL RETAINING RING	SICHERUNGSRING AUßEN	d62 DIN 471	2
11	95.801.018	0	KROUZEK POJIST.VNITR	INERNAL RETAINING RING	SICHERUNGSRING INNEN	d50 DIN 472	2
12	96.001.013	0	O-KROUZEK STATICKY	O-RING STATIC	O-RING STATISCH	45x2 NBR 70Sh	1
13	96.002.011	0	O-KROUZEK DYNAMICKY	O-RING DYNAMIC	O-RING DYNAMISCH	24x2 NBR 70Sh	1
14	96.061.009	0	KROUZEK STIRACI	WIPER RING	ABSTREIFRING	WD2200280 Z201 28,0x36,0x5,0x6,0	1
15	96.082.002	0	KROUZEK TESNICI	SEALING RING	DICHTUNGSRING	13/17x1.5 Cu	3
16	96.084.001	0	KROUZEK VODICI	GUIDE RING	FÜHRUNGSRING	GP6500500 - T47 50,0x5.6x2.5x146.9	1
17	96.084.006	0	KROUZEK VODICI	GUIDE RING	FÜHRUNGSRING	GR4300280 - T47 28,0x3,9x1,55x94,1	1
18	96.900.001	0	TESNENI KOMBINOVANE	COMBINED SEALING	KOMBIDICHTUNG	PW4200500 - Z20N 39,0x50,0x4,2	1
19	96.900.021	0	TESNENI KOMBINOVANE	COMBINED SEALING	KOMBIDICHTUNG	RSK200280- 46N 28,0x38,7x4,2	1

Číslo Sestavy/Number of assembly/Nummer der Baugruppe; Ver.-Verze/Version/Version; Název sestavy/Assembly name/Name der Baugruppe;; Poz.-Pozice/Position/Position; Objednací číslo/Order number/Bestellnummer; Polotovar/Semiproduct/Halbfabrikat; Vstupní materiál(Vstupní mat.)/Default material/Eingangsmaterial;

7.18. Rameno / Saw arm / Sägerahmen

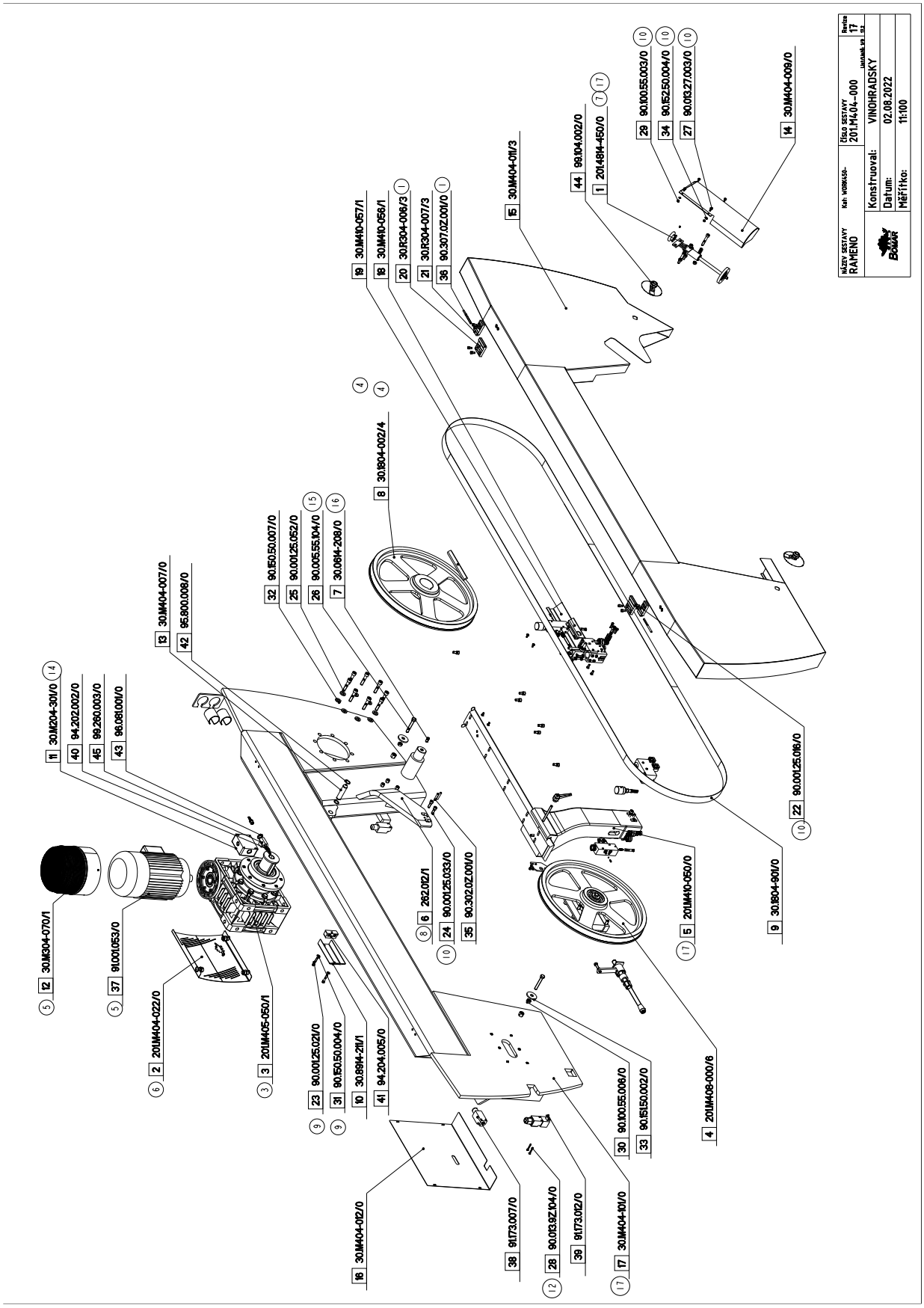

7.19. Kusovník / Piece list / Stückliste - Rameno / Saw arm / Sägerahmen

NAZEV SESTAVY	CISLO SESTAVY	REVIZE
RAMENO	201.M404-000	17

rpt.index

Poz.	Objednací číslo	Verze	Název CZ	Name EN	Name DE	Polotovar	ks/m
1	201.4814-450 (8)(17)	0	KARTAC	BRUSH	BÜRSTE		1
2	201.M404-022 (7)	0	KRYT	COVER	ABDECKUNG		1
3	201.M405-050 (6)	1	PREVODOVKA	GEARBOX	GETRIEBE		1
4	201.M408-000 (3)	6	NAPINANI	TENSIONING	SPANNUNG		1
5	201.M410-050 (17)	0	VEDENI PASU	SAW BAND GUIDE	SÄGEBANDFÜHRUNG		1
6	262.012	1	ODMEROVANI	MEASURING	GEHRUNGSMESSUNG		1
7	30.0614-208 (16)	0	SROUB	SCREW	SCHRAUBE	TZM10x1.5P - 20	1
8	30.1804-002	4	KOLO HNACI	DRIVE WHEEL	ANTRIEBSRAD		1
9	30.1804-901	0	PAS PILOVY 440	SAW BAND	SÄGEBAND		1
10	30.8914-211	1	KRYT	COVER	ABDECKUNG	P1.5 - 104x158	1
11	30.M204-301	0	KRABICE ELEKTRO	ELECTRO BOX	ELEKTRISCHE BUCHSE		1
12	30.M304-070 (14)	1	VENTILATOR	VENTILATOR	VENTILATOR		1
13	30.M404-007 (5)	0	CEP	PIVOT	BOLZEN	D18 - 76	1
14	30.M404-009	0	KRYT KARTACKU	BRUSH COVER	BÜRSTENABDECKUNG		1
15	30.M404-011	3	KRYT RAMENE	ARM COVER	RAHMENABDECKUNG		1
16	30.M404-012	0	KRYT NAPINANI	COVER FOR TENSIONING DEV.	BANDSPANNUNGSABDECKUNG	<Chybné parametry pro polotovar '40.001.01.02' typu 'P'>	1
17	30.M404-101 (17)	0	RAMENO	BEAM	RAHMEN		1
18	30.M410-056	1	KRYT PASU	BELT COVER	BANDABDECKUNG	<Chybné parametry pro polotovar '40.001.01.23' typu 'P'>	1
19	30.M410-057 (4)	1	KRYT PASU	BELT COVER	BANDABDECKUNG	<Chybné parametry pro polotovar '40.001.01.23' typu 'P'>	1
20	30.R304-006 (4)	3	PANT	HINGE	TÜRBAND		2
21	30.R304-007	3	PANT	HINGE	TÜRBAND		2
22	90.001.25.016 (1)	0	SROUB IMBUS	HEXAGON SOCKET SCREW	IMBUSSCHRAUBE	6x12 DIN 912 8,8 černěný	8
23	90.001.25.021 (10)	0	SROUB IMBUS	HEXAGON SOCKET SCREW	IMBUSSCHRAUBE	6x35 DIN 912 8,8 černěný	2
24	90.001.25.033 (9)	0	SROUB IMBUS	HEXAGON SOCKET SCREW	IMBUSSCHRAUBE	8x25 DIN 912 8,8 černěný	2
25	90.001.25.052 (10)	0	SROUB IMBUS	HEXAGON SOCKET SCREW	IMBUSSCHRAUBE	10x50 DIN 912 8,8 černěný	8
26	90.005.55.104	0	SROUB 6HRANNY	HEX HEAD SCREW	SECHSKANTSCHRAUBE	10x65 DIN 933 8,8 Zn	2
27	90.013.27.003 (15)	0	SROUB PULKULATY	BUTTON HEAD SCREW	RUNDKOPFSCHRAUBE	5x10 ISO 7380 čern	8
28	90.013.9Z.104 (10)	0	SROUB PULKULATY	BUTTON HEAD SCREW	RUNDKOPFSCHRAUBE	4x30 ISO 7380 TX A2 BEZPEČNOSTNÍ S KOLÍČKEM	2
29	90.100.55.003 (12)	0	MATICE PRESNA ZINEK	PRECISION NUT - ZN	PRÄZISE MUTTER - ZN	5 DIN 934 8,8 Zn	4
30	90.100.55.006 (10)	0	MATICE PRESNA ZINEK	PRECISION NUT - ZN	PRÄZISE MUTTER - ZN	10 DIN 934 8,8 Zn	2
31	90.150.50.004	0	PODLOZKA	WASHER	UNTERLEGSCHEIBE	6,4 M6 DIN 125 Zn	2
32	90.150.50.007 (9)	0	PODLOZKA	WASHER	UNTERLEGSCHEIBE	13 M12 DIN 125 Zn	8
33	90.151.50.002	0	PODLOZKA VELKOPL.	LARGE WASHER	GROßFLÄCHENSCHEIBE	13,5x44x4 M12 DIN 440 Zn	2
34	90.152.50.004	0	PODLOZKA VEJIROVA	FAN WASHER	FÄCHERSCHEIBE	5,3 A DIN 6798 Zn	4
35	90.302.0Z.001 (10)	0	KOLIK KUZELOVY+ZAVIT	TAPER PIN + THREAD	KEGELBOLZEN + GEWINDE	6x36 DIN 7978	2
36	90.307.0Z.001	0	KOLIK RYHOVANY	GOOVED PIN	KERBSTIFT	6x80 6x80	2

Číslo Sestavy/Number of assembly/Nummer der Baugruppe; Ver.=Verze/Version/Version; Název sestavy/Assembly name/Name der Baugruppe;; Poz.=Pozice/Position/Position; Objednací číslo/Order number/Bestellnummer; Polotovar/Semiproduct/Halbfabrikat; Vstupní materiál(Vstupní mat.)/Default material/Eingangsmaterial;

7.20. Rameno / Saw arm / Sägerahmen

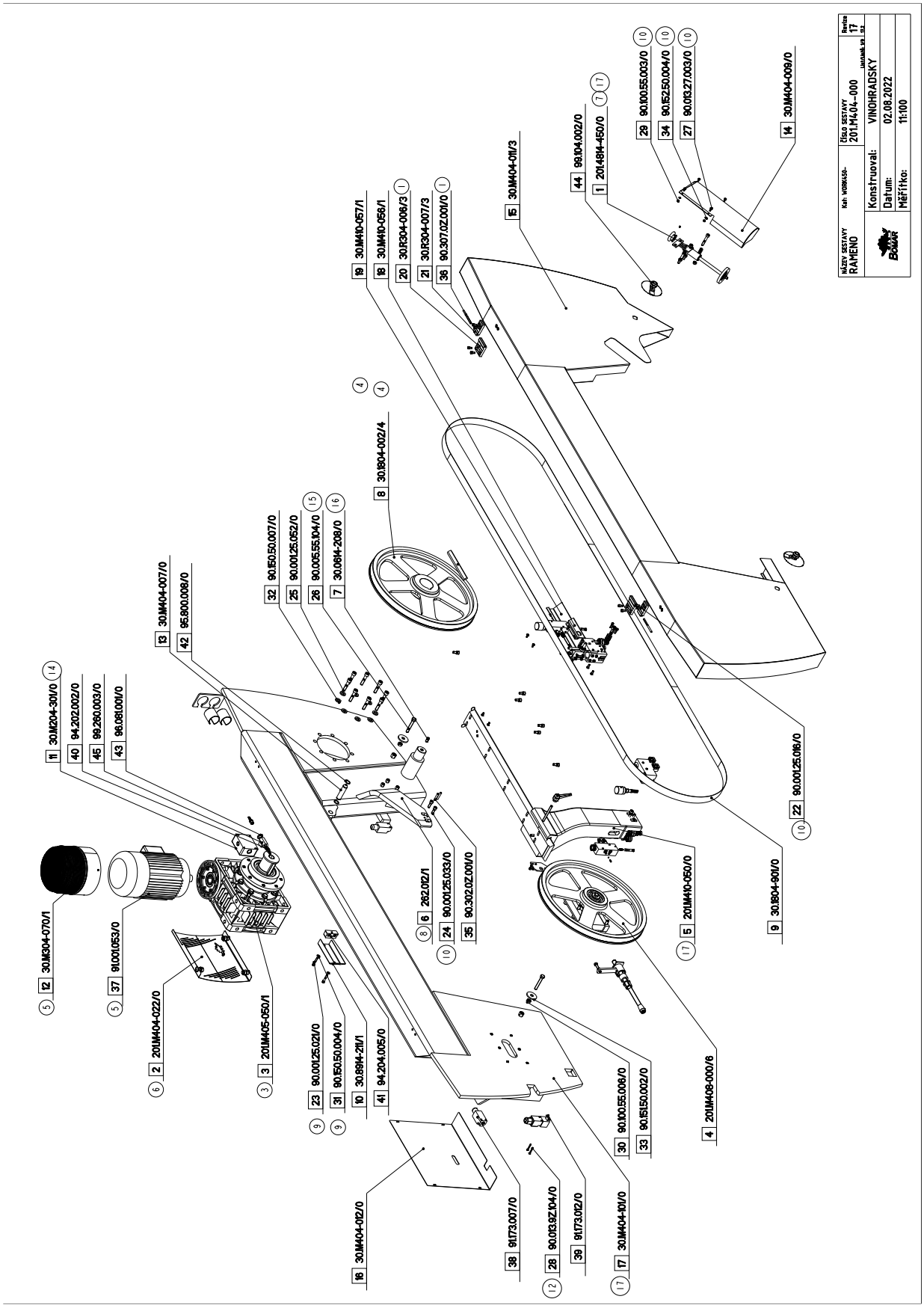

7.21. Kusovník / Piece list / Stückliste - Rameno / Saw arm / Sägerahmen

Poz.	Objednací číslo	Verze	Název CZ	Name EN	Name DE	Polotovar	ks/m
37	91.001.053 (1)	0	ELEKTROMOTOR	ELECTRIC MOTOR	ELEKTROMOTOR	T3A 100L2-4_IE3 (Původní SITI označení motoru FC100L2-4) 3kW; 4R; 230/4(	
38	91.173.007 (5)	0	SPINAC KONCOVY	END SWITCH	ENDSCHALTER	KBA1L11 Lovato (D4N-4A31) 1xNO/1xNC	2
39	91.173.012	0	SPINAC KONC.-ZAMEK	END SWITCH -LOCK	ENDSCHALTER - SCHLOSS	QKS8 2xNC, 250V/400V, 14A/8A, IP54	1
40	94.202.002	0	REDUKCE	REDUCTION / ADAPTOR	REDUKTION	1/4"-6 GES 6-R1/4"	2
41	94.204.005	0	DRZAK	HOLDER	HALTER	LBG 314/14-PP 14 trubka dvojtý	1
42	95.800.008	0	KROUZEK POJIST.VNEJS	EXTERNAL RETAINING RING	SICHERUNGSRING AUßEN	d18 DIN 471	2
43	96.081.001	0	KROUZEK TESNICI	SEALING RING	DICHTUNGSRING	23x15x3 PRYŽ S TEXT. VLOŽKOU	1
44	99.104.002	0	ZAMEK	LOCK	SCHLOSS	zámek na kryt ramene zámek + klička	2
45	99.260.003	0	VENTIL KULOVY	BALL VALVE	KUGELVENTIL	1/4" /// možno nahradit 99.260.004 vnitřní/vnitřní China	1

1.ZRUS.KOSTKA 30.1714-103 A NAHR.30.R304-007,PRID.KOLI 6x80 (DIN1472 90.307.0Z.001). 109/ZM111 20.5.2011 SLEZACKOVA
2.ZRUS.VENTILATOR 30.8504-060 A NAHR.30.M304-060 . 035/ZM104 21.3.2012 SLEZACKOVA
3.ZRUS.PREVODOVKA 201.M405-000 A NAHR.201.M405-050. 056/ZM105 27.3.2013 SLEZACKOVA
4.ZRUS.KRYT PASU 30.M404-016 A NAHR.30.M404-066,ZRUS.KRYT PASU 30.M410-006 A NAHR.30.M410-056,ZRUS.KRYT PASU 30.M410-007 A NAHR.30.M410-057. 090/ZM110 19.5.2014 SLEZACKOVA
5.ZRUS.VENTILATOR 30.M304-060 A NAHR.30.M304-060. 120/ZM142 24.6.2014 SLEZACKOVA
6.PRIDAN KRYT PREVODOVKY 201.M404-022. 005/ZM013 2.2.2015 SLEZACKOVA
7.ZRUS.KARTAC 201.M304-020 A NAHR. 201.4814-400,ZRUS.TYC 30.M404-056 A NAHR.30.M304-018. 045/ZM032 4.3.2015 SLEZACKOVA
8.PRID.ODMEROVANI 262.012,ZRUS.KRYT PASU 30.M404-066. 017/ZM181 29.7.2015 SLEZACKOVA
9.PRIDANO - 2XPODLOZKA 6,4(90.150.50.004),2xSROUB M6x35(90.001.25.021). 228/ZM283 16.12.2015 SLEZACKOVA
10.PRID.8xSROUB M5x10(90.013.27.003),4xPODLOZKA 5,3(90.152.50.004),4xMATICE 5(90.100.55.003),8xSROUB M6x12(90.001.25.016), 2xSROUB M8x25(90.001.25.033). 044/ZM093 8.4.2016 SLEZACKOVA
11.ZRUSENO TYC 30.M304-018 A NAHR. SROUBEM 90.005.55.080; 291/ZM046 1.2.2018 SCERBA
12.PRID. 2xSROUB M4x30 90.013.9Z.104. 171/ZM302 28.8.2018 SZABARI
13.ZM. POLOHY DRZAKU VENTILU 30.1814-011. 059/ZM082 19.02.2020 KOSYK
14.ZR.KRABICE ELEKTRO 91.190.036 A NAHR.30.M204-301. 089/ZM140 30.3.2020 KOSYK
15.ZRUS. 2x MATICE 90.100.55.006, ZRUS 2x SROUB 90.005.55.080, PRID. 2x SROUB 90.005.55.104. 283/ZM376 13.10.2021 KOVAR
16.PRIDAN SROUB 30.0614-208. 197/ZM211 20.5.2022 JAGNESAK
17.ZRUS.RAMENO 30.M404-001 A NAHR.RAMENO 30.M404-101, ZRUS.VED,PASU M410-000 A NAHR.VED.PASU 201.M410-050, ZRUS.KARTAC 201.4814-400 A NAHR.KARTAC 201.4814-450, ZRUS. DRZAK 30.1814-011. 209/ZM232 16.10.2023 CHUCHRO

Číslo Sestavy/Number of assembly/Nummer der Baugruppe; Ver.-Verze/Version/Version; Název sestavy/Assembly name/Name der Baugruppe;; Poz.-Pozice/Position/Position; Objednací číslo/Order number/Bestellnummer; Polotovar/Semiproduct/Halbfabrikat; Vstupní materiál(Vstupní mat.)/Default material/Eingangsmaterial;

7.22. Kartáč / Brush / Bürste

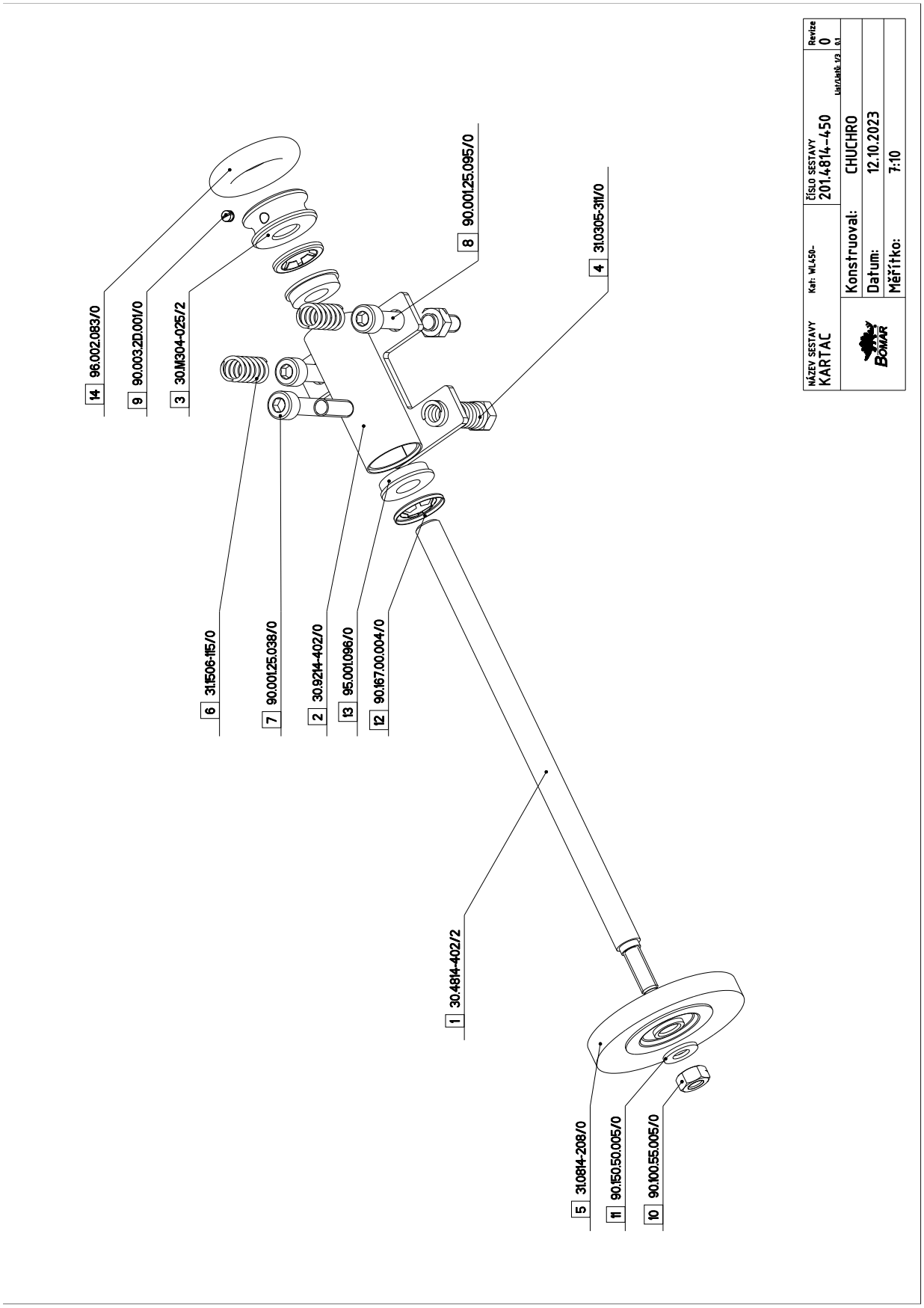

7.23. Kusovník / Piece list / Stückliste - Kartáč / Brush / Bürste

NAZEV SESTAVY	CISLO SESTAVY	REVIZE
KARTAC	201.4814-450	0

Poz.	Objednací číslo	Verze	Název CZ	Name EN	Name DE	Polotovar	Ks.
1	30.4814-402	2	HRIDEL	SHAFT	WELLE	D12 - 250	1
2	30.9214-402	0	DRZAK	HOLDER	HALTER		1
3	30.M304-025	2	KOLECKO	WHEEL	ROLLE	D35 - 15	1
4	31.0305-311	0	PRUZINA	SPRING	FEDER	2.00x12x35x12.5	1
5	31.0814-208	0	KARTAC	BRUSH	BÜRSTE	dia 75, width 10, bore 9,5mm brassed steel, crimped wire 0,30mm	1
6	31.1506-115	0	PRUZINA	SPRING	FEDER	1.6x12x25x7.5	2
7	90.001.25.038	0	SROUB IMBUS	HEXAGON SOCKET SCREW	IMBUSSCHRAUBE	8x50 DIN 912 8,8 černěný	1
8	90.001.25.095	0	SROUB IMBUS	HEXAGON SOCKET SCREW	IMBUSSCHRAUBE	8x70 DIN 912 8,8 černěný	2
9	90.003.2D.001	0	SROUB STAVECI	SET SCREW	STELLSCHRAUBE	5x6 DIN 914 černěn	1
10	90.100.55.005	0	MATICE PRESNA ZINEK	PRECISION NUT - ZN	PRÄZISE MUTTER - ZN	8 DIN 934 8,8 Zn	4
11	90.150.50.005	0	PODLOZKA	WASHER	UNTERLEGSCHEIBE	8,4 M8 DIN 125 Zn	1
12	90.167.00.004	0	PODLOZKA	WASHER	UNTERLEGSCHEIBE	12 STARLOCK pojistný kroužek černý	2
13	95.001.096	0	LOZISKO	BEARING	LAGER	F6901 2Z CMB - (F61901 2Z - Evropské značení)	2
14	96.002.083	0	O-KROUZEK DYNAMICKY	O-RING DYNAMIC	O-RING DYNAMISCH	25x10 - NBR 70Sh	1

Číslo Sestavy/Number of assembly/Nummer der Baugruppe; Ver.-Verze/Version/Version; Název sestavy/Assembly name/Name der Baugruppe;; Poz.-Pozice/Position/Position; Objednací číslo/Order number/Bestellnummer; Polotovar/Semiproduct/Halbfabrikat; Vstupní materiál(Vstupní mat.)/Default material/Eingangsmaterial;

7.24. Kryt / Cover / Abdeckung

Cislo Sestavy	Ver.	Nazev sestavy
201.M404-022	0	KRYT/COVER/ABDECKUNG

Poz.	Objednaci cislo	Ver.	Nazev polozky	Rozmer	Ks
1	30.M404-023	1	PLECH / SHEET METAL / BLECH	P1x295	1
2	90.013.27.028	0	SROUB PULKULATY / BUTTON HEAD SCREW / RUNDKOPFSCHRAUBE	M12X30_ISO_7380	3
3	90.152.50.006	0	PODLOZKA VEJIROVA / FAN WASHER / FÄCHERSCHEIBE	M12 DIN6798	3
4	90.100.55.007	0	MATICE PRESNA ZINEK / PRECISION NUT - ZN / PRÄZISE MUTTER - ZN	MATICE _ M12	3

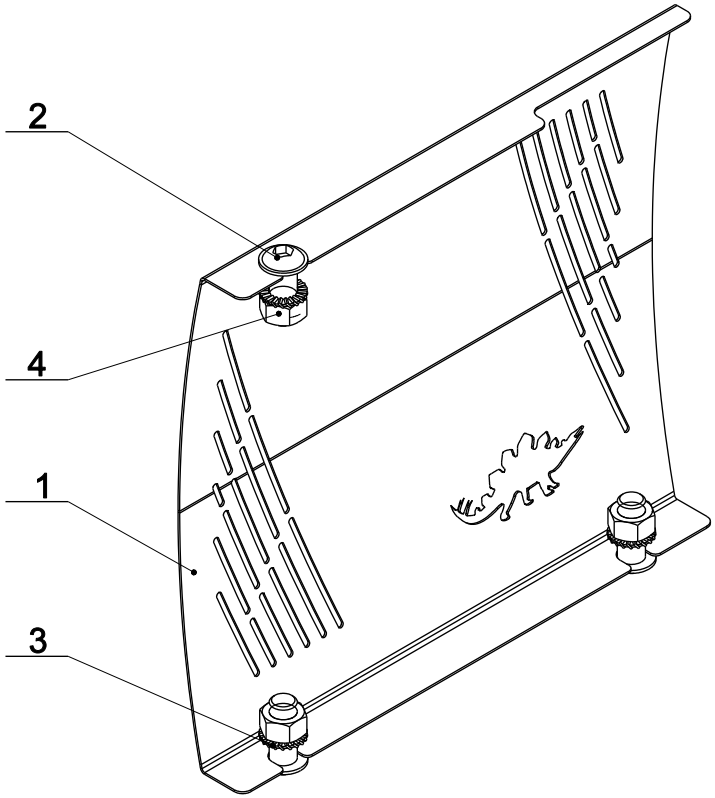

2:5

Cislo Sestavy/Number of assembly/Nummer der Baugruppe; Verze (Ver.)/Version/Version; Nazev sestavy/Assembly title/Name der Baugruppe; Pozice (Poz.)/Position/Position;
Objednaci cislo/Purchase order number/Bestellnummer; Nazev polozky/Volume title/Name der Position; Rozmer/Stock size/Abmessung

NÁZEV SESTAVY	ČÍSLO SESTAVY	REVIZE	Kategorie: WL450-	
PREVODOVKA	201.M405-050 List/Listů: 1/0	1 1.2	Datum: 02.08.2022	Konstruktér: ODVARKA

-

pos.	číslo výkresu	verze	množství	název	polotovar	jakost	pov.upr.	váha	poznámka
1	30.0804-009	3	1	PODLOZKA	P6 - 60x60 40.001.01.30	S235	CERNIT	0.1	
2	30.1212-052 (I)	0	1	PERO	HR12x8 - 142 40.165.00.03	11600		0.1	
3	30.1804-010	0	1	PODLOZKA	P6 - 70x70 40.001.01.11	S235	CERNIT	0.2	
4	30.4804-004	5	1	HRIDEL	D65 - 309 40.140.04.26	11600		4.1	
5	30.4804-006	1	1	PERO	HR14x14 - 62 40.165.00.04	12050		0.1	
6	30.M405-051	0	1	KROUZEK DISTANCNI	TR55x8 - 44 40.120.01.34	11353		0.3	
7	30.M405-052	1	1	PRIRUBA	ODLITEK 80.2904-002	42 2420	LAK 9005	8.3	
8	90.005.55.034	0	8	SROUB 6HRANNY	12x40 DIN 933 8,8 Zn			0.0	
9	90.011.27.009	0	2	SROUB ZAPUSTNY	12x20 DIN 7991 10,9 černěný			0.0	
10	90.150.50.007	0	8	PODLOZKA	13 M12 DIN 125 Zn			0.0	
11	95.001.027	0	2	LOZISKO	6309 T3 CMB 2RS			0.8	
12	99.002.040	0	1	PREVODOVKA SNEKOVA	MU110; I=30; V6; P100; B14			20.8	

INDEX	ZMĚNA	DATUM	PODPIS
I.	ZRUS. PERO 30.2904-008 A NAHR. 30.1212-052. 206/ZM240	21.7.2022	CHAJDA

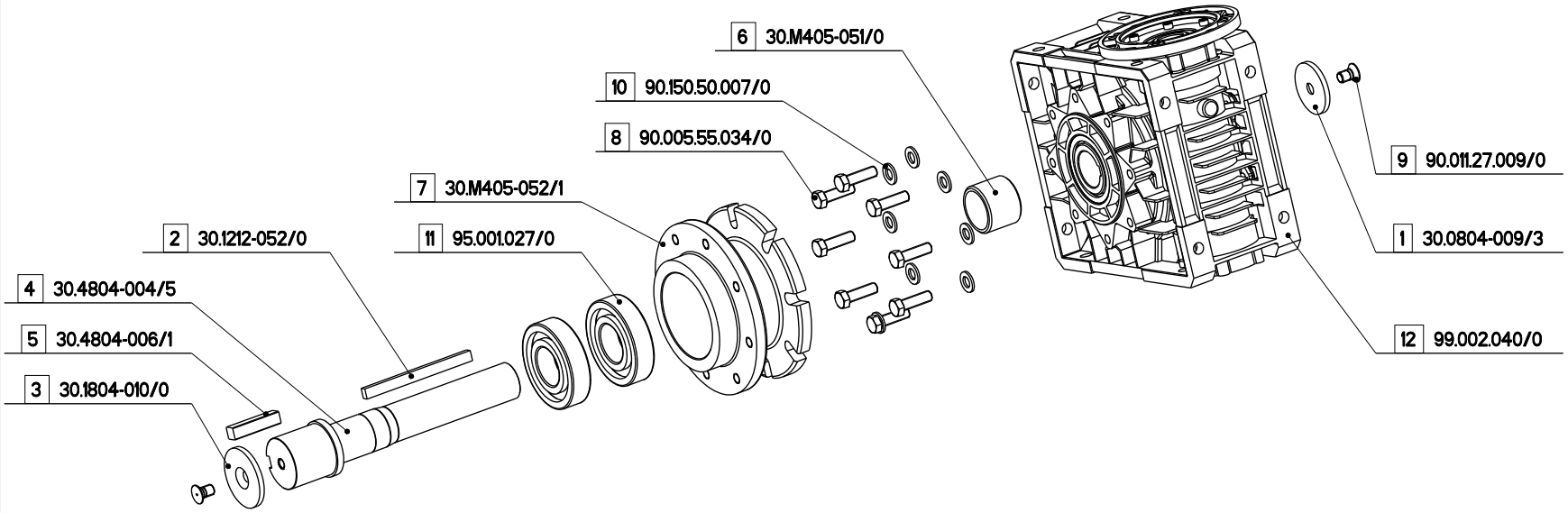

Číslo Sestavy/Number of assembly/Nummer der Baugruppe; Verze (Ver.)/Version/Version; Název sestavy/Assembly name/Name der Baugruppe; Datum/Date/Datum; Kontrukter/Designer/Konstrukteur;Číslo výkresu/Drawing number/Zeichnung nummer; Název/Name/Name; Polotovar/Semiproduct/Halbfabrikat; Vstupní materiál(Vstupní mat.)/Default material/Eingangsmaterial; Jakost/Norm/Norm; Pov. úpr./Surface finish/Oberflächengüte;Váha/Weight/Gewicht; Poznámka/Note/Notiz

7.26. Napínání / Tensioning / Spannung

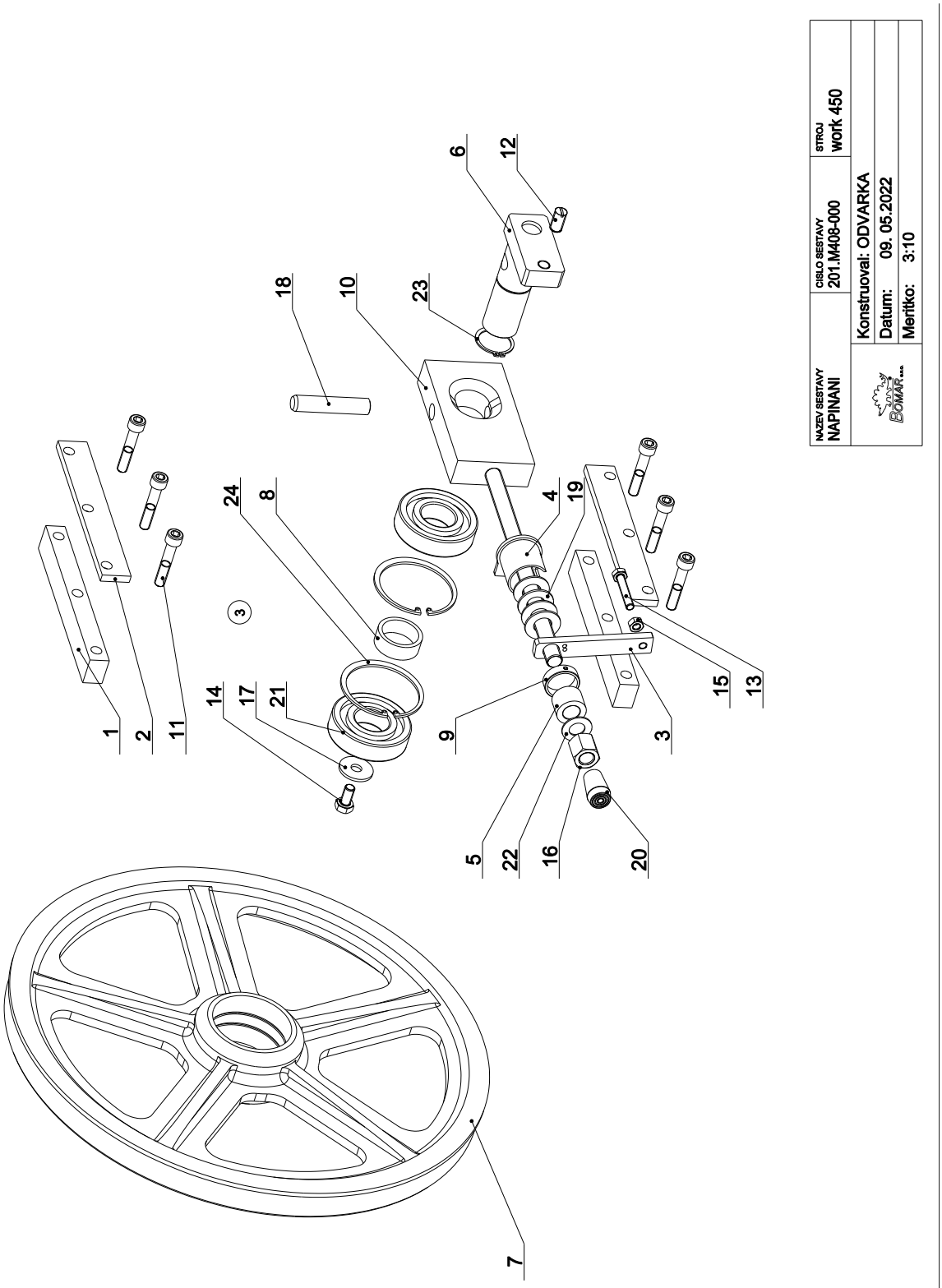

Cislo Sestavy 201.M408-000	Ver. 6	Nazev sestavy NAPINANI/TENSIONING/SPANNUNG

Poz.	Objednaci cislo	Ver.	Nazev polozky	Rozmer	Ks
1	30.0808-002	1	LISTA VODICI / GUIDING SLAT / FÜHRUNGSLEISTE	30x20	2
2	30.0808-006	2	LISTA / SLAT / LEISTE	HR 30x8	2
3	30.1708-004	4	DRZAK / HOLDER / HALTER	HR 20x8	1
4	30.2908-106 (6)	0	DRZAK / HOLDER / HALTER		1
5	30.4208-002.1 (6)	1	KROUZEK DISTANCNI / SPACER RING / DISTANZRING	D30	1
6	30.4808-101	5	CEP NAPINANI / TENSIONING PIVOT / SPANNUNGSBOLZEN		1
7	30.4808-102	2	KOLO NAPINACI / TENSIONING WHEEL / SPANNRAD	ODLITEK	1
8	30.4808-103	2	KROUZEK DISTANCNI / SPACER RING / DISTANZRING	TR 45x4	1
9	30.M208-001 (2)	2	KROUZEK / RING / RING	TR 35x2,5	1
10	30.M308-003 (5)	0	NAPINANI / TENSIONING / SPANNUNG		1
11	90.001.25.053	0	SROUB IMBUS / HEXAGON SOCKET SCREW / IMBUSSCHRAUBE	M10X55	6
12	90.004.2D.013	0	SROUB STAVECI / SET SCREW / STELLSCHRAUBE	SROUB M12X25	1
13	90.005.55.020	0	SROUB 6HRANNY / HEX HEAD SCREW / SECHSKANTSCHRAUBE	SROUB M8X45	1
14	90.005.55.023 (3)	0	SROUB 6HRANNY / HEX HEAD SCREW / SECHSKANTSCHRAUBE	SROUB M10X20	1
15	90.100.55.005	0	MATICE PRESNA ZINEK / PRECISION NUT - ZN / PRÄZISE MUTTER - ZN	MATICE _ M8	1
16	90.106.05.005 (6)	0	MATICE / NUT / MUTTER	MATICE _ M16_1.5D	1
17	90.151.50.001 (3)	0	PODLOZKA VELKOPL. / LARGE WASHER / GROßFLÄCHENSCHEIBE	PODLOZKA 10	1
18	90.300.0Z.003	0	KOLIK VALCOVY KALENY / CYLINDRICAL PIN HARDENED / ZYLINDERSTIFT GEHÄRTET	KOLIK 16X80	1
19	90.350.0Z.002	0	PRUZINA TALIROVA / DISC SPRING / TELLERFEDER	35,5X18,3X2,0X2,8	4
20	94.102.025 (5)	0	ZATKA / PLUGBLIND PLUG / BLINDSTOPFEN	465366	1
21	95.001.026	0	LOZISKO / BEARING / LAGER	6307 2RS	2
22	95.750.001 (6)	0	KROUZEK KU / TEFLON BEARING / GLEILAGER BUCHSEN	16x1	1
23	95.800.014	0	KROUZEK POJIST.VNEJS / EXTERNAL RETAINING RING / SICHERUNGSRING AUßEN	POJISTNY KROUZEK 35	1
24	95.801.013	0	KROUZEK POJIST.VNITR / INERNAL RETAINING RING / SICHERUNGSRING INNEN	POJISTNY KROUZEK 80	2

1.ZRUS.SROUB M12x20(90.011.27.009) A NAHR.M10x20(90.011.27.008). 110/ZM212 21.6.2012 SLEZACKOVA
2.ZRUSEN KROUZEK 30.3508-004 A NAHR.30.M208-001. 017/ZM050 13.2.2017 SLEZACKOVA
3.ZR.PODLOZKA 30.2908-001 A NAHR.90.151.50.001,ZR.SROUB 90.011.27.008 A NAHR.90.005.55.023. 045/ZM066 KOSYK
4.PRID. MATICE 30.3508-001.1, ZRUS. SROUB 30.4008-001, ZRUS. KOSTKA NAPINANI 30.0808-001 A NAHR. 30.M408-001. 269/ZM436 25.11.2021 KOVAR
5.ZRUS.NAPINANI 30.M408-001 A NAHR.30.M308-003;PRID.RUKOJET 94.102.025. 038/ZM037 1.02.2022 ZINDULKA
6.ZRUS.DRZAK 30.6908-102 A NAHR.30.2908-106;ZRUS.MATICE 30.3508-001.1 A NAHR.90.106.05.005;PRID.KROUZEK 30.4208-002.1,
95.750.001. 296/ZM152 5.5.2022 SLEZACKOVA

Cislo Sestavy/Number of assembly/Nummer der Baugruppe; Verze (Ver.)/Version/Version; Nazev sestavy/Assembly title/Name der Baugruppe; Pozice (Poz.)/Position/Position;
Objednaci cislo/Purchase order number/Bestellnummer; Nazev polozky/Volume title/Name der Position; Rozmer/Stock size/Abmessung

7.28. Vedení pásu / Belt guide / Sägebandführung

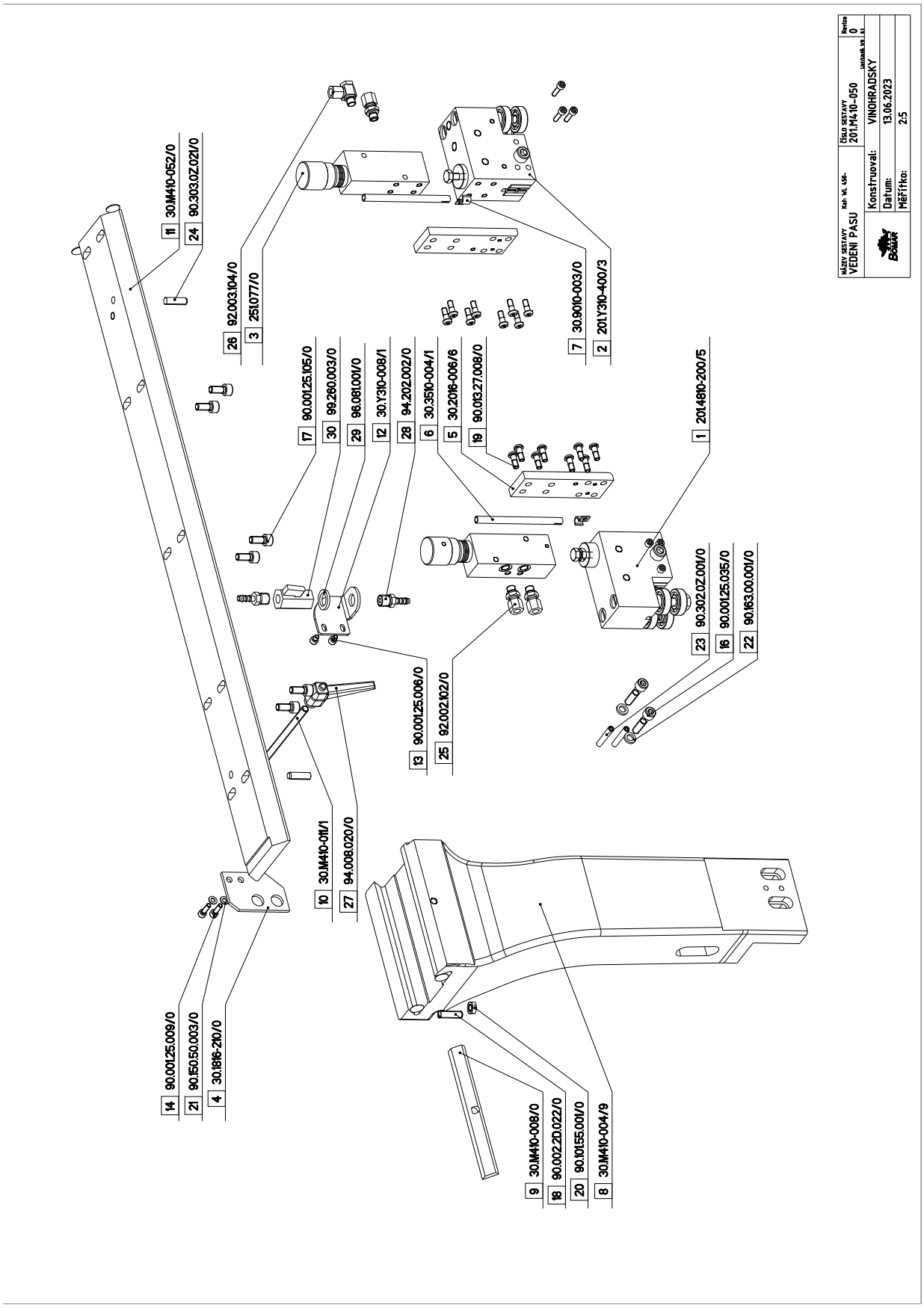

7.29. Kusovník / Piece list / Stückliste - Vedení pásu / Belt guide / Sägebandführung

NAZEV SESTAVY	CISLO SESTAVY	REVIZE
VEDENI PASU	201.M410-050	0

Poz.	Objednací číslo	Verze	Název CZ	Name EN	Name DE	Polotovar	Ks.
1	201.4810-200	5	KOSTKA VODICI	GUIDING CUBE	FÜHRUNGSKLOTZ		1
2	201.Y310-400	3	KOSTKA VODICI	GUIDING CUBE	FÜHRUNGSKLOTZ		1
3	251.077	0	REGULACE PRITLAKU	PRESSURE REGULATION	SCHNITTDRUCKREGULATION		2
4	30.1816-210	0	DRZAK	HOLDER	HALTER	<Chybné parametry pro polotovar '40.001.01.05' typu 'P'>	1
5	30.2016-006	6	DESKA	BOARD	PLATTE	HR40x10 - 115	2
6	30.3510-004	1	TRUBKA	TUBE	ROHR	TR8x1 - 110	2
7	30.9010-003	0	DRZAK	HOLDER	HALTER	P1.5 - 10x28	2
8	30.M410-004	9	KONZOLA	BRACKET	KONSOLE		1
9	30.M410-008	0	LISTA	SLAT	LEISTE	HR20x6 - 170	1
10	30.M410-011	1	TYC ZAVITOVA	THREADED POLE	GEWINDESTANGE	TZM8x125P - 125	1
11	30.M410-052	0	LISTA VODICI	GUIDING SLAT	FÜHRUNGSLEISTE	HR90x20 - 840	1
12	30.Y310-008	1	DRZAK	HOLDER	HALTER	P3 - 50x75	1
13	90.001.25.006	0	SROUB IMBUS	HEXAGON SOCKET SCREW	IMBUSSCHRAUBE	5x6 DIN 912 8,8 černěný	2
14	90.001.25.009	0	SROUB IMBUS	HEXAGON SOCKET SCREW	IMBUSSCHRAUBE	5x16 DIN 912 8,8 černěný	2
16	90.001.25.035	0	SROUB IMBUS	HEXAGON SOCKET SCREW	IMBUSSCHRAUBE	8x35 DIN 912 8,8 černěný	2
17	90.001.25.105	0	SROUB IMBUS	HEXAGON SOCKET SCREW	IMBUSSCHRAUBE	8x18 DIN 912 8,8 černěný	7
18	90.002.2D.022	0	SROUB STAVECI	SET SCREW	STELLSCHRAUBE	8x30 DIN 913 45H černěn	2
19	90.013.27.008	0	SROUB PULKULATY	BUTTON HEAD SCREW	RUNDKOPFSCHRAUBE	6x16 ISO 7380 čern	16
20	90.101.55.001	0	MATICE PR.NIZKA ZN	PRECISION THIN NUT - ZN	PRÄZISE MUTTER NIEDRIGE - ZN	8 DIN 439 Zn	2
21	90.150.50.003	0	PODLOZKA	WASHER	UNTERLEGSCHEIBE	5,3 M5 DIN 125 Zn	2
22	90.163.00.001	0	PODLOZKA	WASHER	UNTERLEGSCHEIBE	M08x16,6 NORD-LOCK SP 6hr (HLB-8)	2
23	90.302.0Z.001	0	KOLIK KUZELOVY+ZAVIT	TAPER PIN + THREAD	KEGELBOLZEN + GEWINDE	6x36 DIN 7978	2
24	90.303.0Z.021	0	KOLIK PRUZNY BEZ PU	FLEXIBLE PIN WITHOUT SURF. TREATMENT	SPANNSTIFT OHNE OBERFLÄCHENBEHANDLUNG	ISO 8752 1481	2
25	92.002.102	0	SROUBENI PRIME KOMPL	null	null	S-GEV 08LLRK 1/8" - 12x1 komplet, kužel. závit	3
26	92.003.104	0	SROUBENI UHL.NATAC. KOVOVE	null	null	P-RSWV 08LLR 1/8" - 12x1 komplet	1
27	94.008.020	0	PAKA MONTAZNI	ASSEMBLY LEVER	MONTAGEHEBEL	M8 Elesa MRX.80 B	1
28	94.202.002	0	REDUKCE	REDUCTION / ADAPTOR	REDUKTION	1/4"-6 GES 6-R1/4"	2
29	96.081.001	0	KROUZEK TESNICI	SEALING RING	DICHTUNGSRING	23x15x3 PRYŽ S TEXT. VLOŽKOU	1
30	99.260.003	0	VENTIL KULOVY	BALL VALVE	KUGELVENTIL	1/4" /// možno nahradit 99.260.004 vnitřní/vnitřní China	1

Číslo Sestavy/Number of assembly/Nummer der Baugruppe; Ver.-Verze/Version/Version; Název sestavy/Assembly name/Name der Baugruppe;; Poz.-Pozice/Position/Position; Objednací číslo/Order number/Bestellnummer; Polotovar/Semiproduct/Halbfabrikat; Vstupní materiál(Vstupní mat.)/Default material/Eingangsmaterial;

7.30. Kostka vodící / Lead cube / Führungsklotz

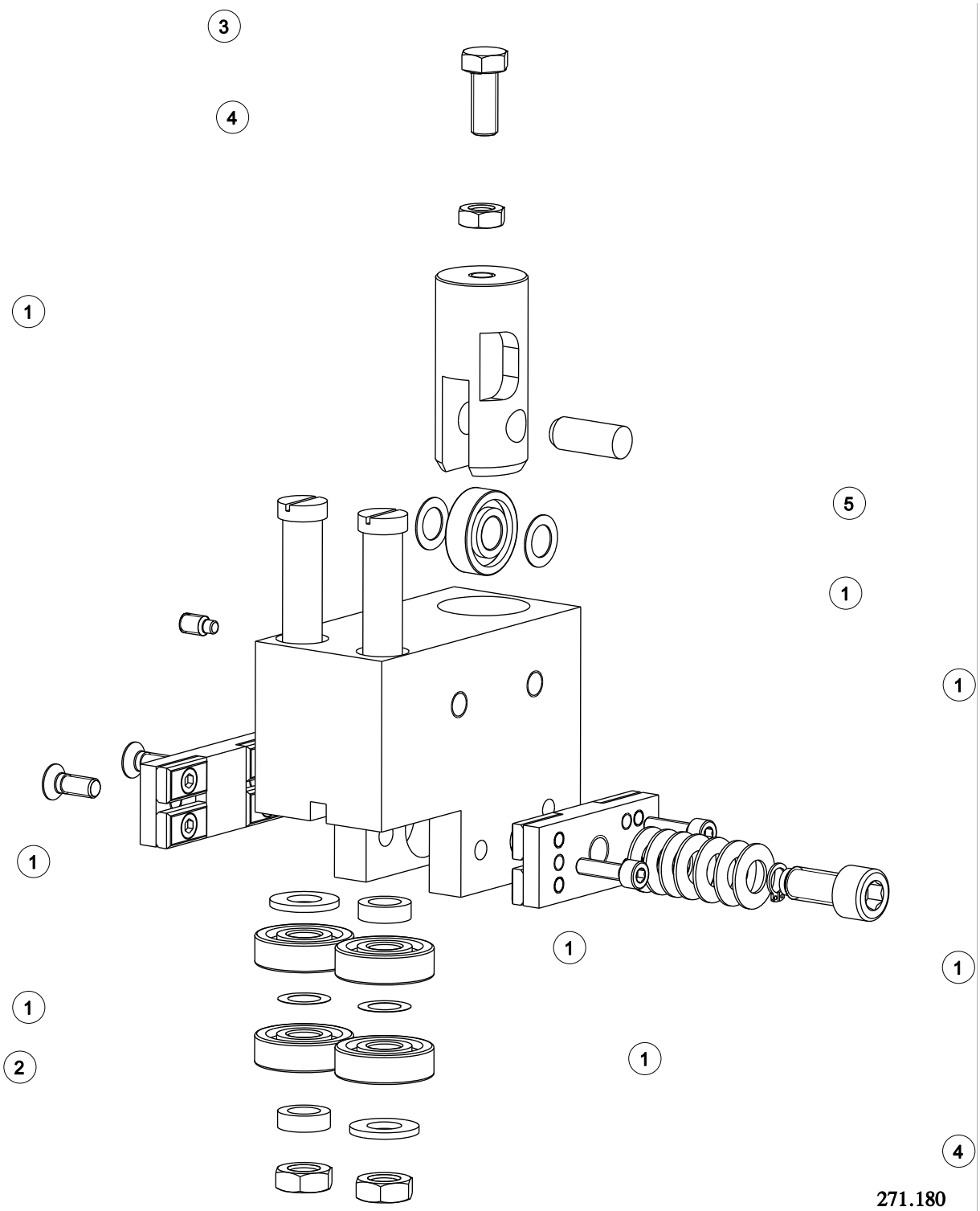

NAZEV SESTAVY	CISLO SESTAVY	STROJ
KOSTKA VODICI	201.4810-200	STG 440GA
BOMAR s.r.o.	Konstruoval: VINOHRADSKY	
	Datum: 27. 01.2010	
	Meritko: 7:10	

7.31. Kusovník / Piece list / Stückliste - Kostka vodící / Lead cube / Führungsklotz

NÁZEV SESTAVY	ČÍSLO SESTAVY	REVIZE	Kategorie: STG 440GA-	
KOSTKA VODICI	201.4810-200 List/Listů: 2/0	5 5.2	Datum: 02.08.2022	Konstruktér: VINOHRADSKY

-

pos.	číslo výkresu	verze	množství	název	polotovar	jakost	pov.upr.	váha	poznámka
	30.1810-202	4	1	DRZAK	D28 - 63 40.140.04.14	11600		0.2	
	30.1810-203	2	1	KOSTKA VODICI	HR80x50 - 102 40.710.00.01	GG 25		1.8	
	30.C210-403	1	2	DISTANC	TR16x3 - 6 40.120.01.04	11373		0.0	
	30.Y310-212	3	2	EXCENTR	D15 - 88 40.140.04.06	C45 - 12050		0.1	
	30.Y310-306	1	1	SROUB IMBUS	M10x25 90.001.25.047			0.0	
	30.Y310-310	0	1	DRZAK TVRDOKOVU				0.1	
	30.Y310-320	0	1	DRZAK TVRDOKOVU	SESTAVA	SESTAVA		0.1	
	90.001.25.143	0	3	SROUB IMBUS	5x18			0.0	
	90.004.2D.002	0	1	SROUB STAVECI	6x12			0.0	
	90.005.55.015	0	1	SROUB 6HRANNY	8x20			0.0	
	90.011.27.017	0	2	SROUB ZAPUSTNY	6x16			0.0	
	90.101.55.001	0	1	MATICE PR.NIZKA ZN	8			0.0	
	90.101.55.002	0	2	MATICE PR.NIZKA ZN	10			0.0	
	90.150.50.006	0	2	PODLOZKA	10,5 M10			0.0	
	90.154.50.001	0	2	PODLOZKA VYMEZOVACI	10x16x0,1	DIN 988	-	0.0	
	90.154.50.003	0	2	PODLOZKA VYMEZOVACI	10x16x0,5	DIN 988	-	0.0	
	90.301.0Z.009	0	1	KOLIK VALCOVY MEKKY	10x24 (10x27)			0.0	
	90.350.0Z.005	0	7	PRUZINA TALIROVA	20x10,2x1			0.0	
	95.001.004	0	1	LOZISKO	6000			0.0	
	95.001.014	0	4	LOZISKO	6200 - servis sklad 50 ks			0.0	
	95.800.002	0	1	KROUZEK POJIST.VNEJS	d8			0.0	

INDEX ZMĚNA DATUM PODPIS

1.ZRUS.DRZAK TVRDOKOVU 30.0810-005 A NAHR. 30.Y310-310,30.Y310-320,ZRUS.EXCENTR 30.0810-009,30.0810-010 A NAHR.30.Y310-212,ZRUS.KOSTKA 30.1810-201 A NAHR.30.1810-203,ZRUS.SOUC.30.0810-007,30.0810-103,30.0810-104, 90.001.55.082,90.011.27.022,PRID.SOUCASTI 30.C210-403,30.Y310-306,90.011.27.017,90.001.25.010,95.800.002. ZM172 27.1.2010 SLEZACKOVA
2.PRIDANA 2xPODLOZKA 10x16x0.1 (90.154.50.001). 277/ZM294 1.11.2010 SLEZACKOVA
3.ZRUSEN SROUB M8x25(90.005.55.017) A NAHR. M8x20(90.005.55.015) 192/ZM310 7.9.2020 SLEZACKOVA
4.ZRUS.MATICE M8(90.100.55.005) A NAHR.M8 NIZKA (90.101.55.001);ZRUŠ.MATICE M10(90.100.55.006) A NAHR.M10 NIZKA (90.101.55.002);ZRUS.3xSROUB M5x20(90.001.25.010) A NAHR.3xM5x18 (90.001.25.143).103/ZM139 12.5.2021 SLEZACKOVA
5. PRID. 2x PODLOZKA 90.154.50.003. 201/ZM292 23.8.2021 KOVAR

Číslo Sestavy/Number of assembly/Nummer der Baugruppe; Verze (Ver.)/Version/Version; Název sestavy/Assembly name/Name der Baugruppe; Datum/Date/Datum; Kontrukter/Designer/Konstrukteur;Číslo výkresu/Drawing number/Zeichnung nummer; Název/Name/Name; Polotovar/Semiproduct/Halbfabrikat; Vstupní materiál(Vstupní mat.)/Default material/Eingangsmaterial; Jakost/Norm/Norm; Pov. úpr./Surface finish/Oberflächengüte;Váha/Weight/Gewicht; Poznámka/Note/Notiz

7.32. Kostka vodící / Lead cube / Führungsklotz

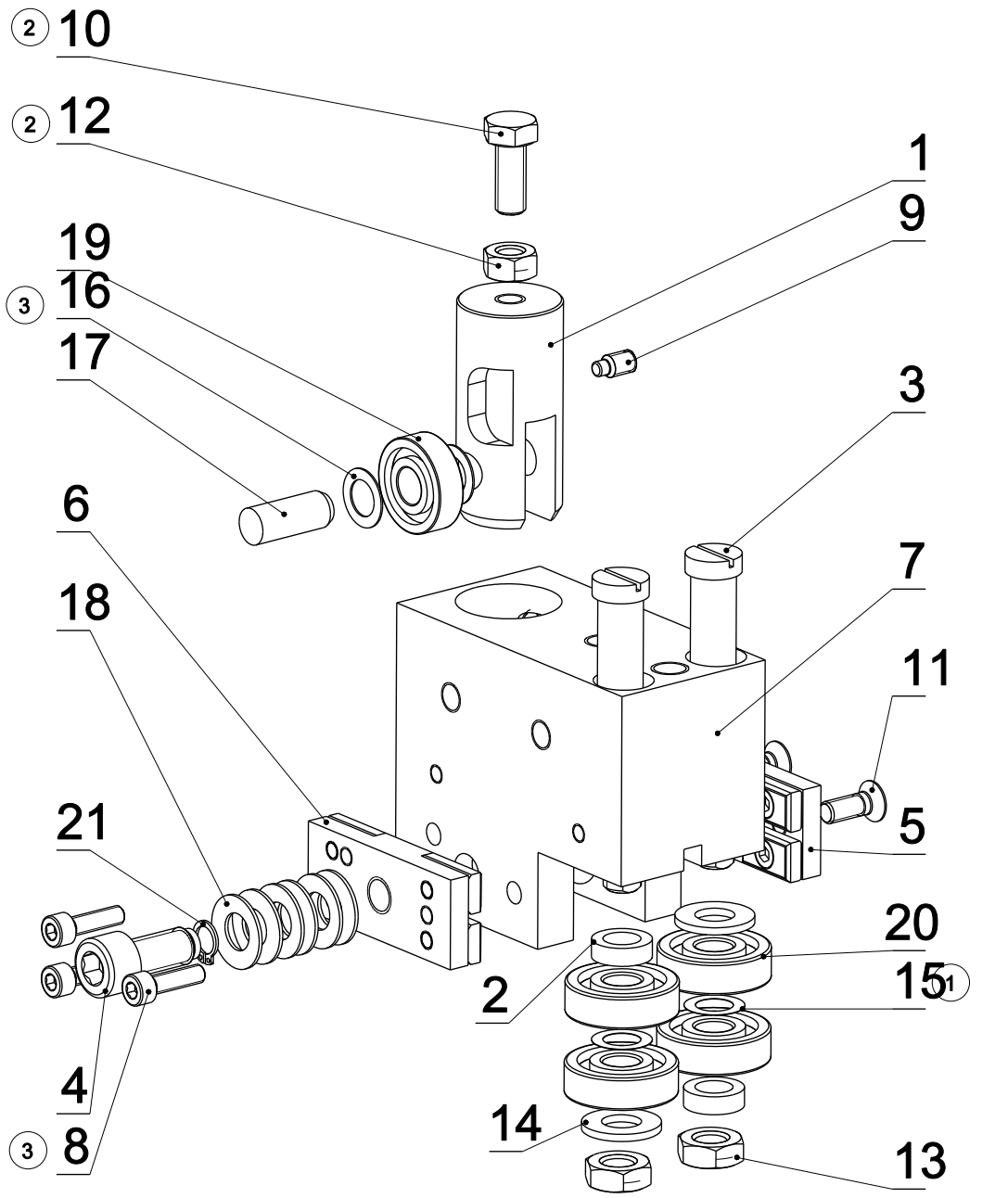

271.254

NAZEV SESTAVY	CISLO SESTAVY	STROJ
KOSTKA VODICI	201.Y310-400	IN360

BOMAR s.r.o.	Konstruoval: HLADIL
	Datum: 23. 08.2021
	Meritko: 7:10

Cislo Sestavy	Ver.	Nazev sestavy
201.Y310-400	3	KOSTKA VODICI/GUIDING CUBE/FÜHRUNGSKLOTZ

Poz.	Objednaci cislo	Ver.	Nazev polozky	Rozmer	Ks
1	30.1810-102	4	DRZAK / HOLDER / HALTER	D 28	1
2	30.C210-403	1	DISTANC / SPACER / ABSTANDSSTÜCK	TR 16x3	2
3	30.Y310-212	3	EXCENTR / EXCENTR / EXZENTER	d 15	2
4	30.Y310-306	1	SROUB IMBUS / HEXAGON SOCKET SCREW / IMBUSSCHRAUBE	M10x25	1
5	30.Y310-310	0	DRZAK TVRDOKOVU / HM HOLDER / HM-HALTER		1
6	30.Y310-320	0	DRZAK TVRDOKOVU / HM HOLDER / HM-HALTER		1
7	30.Y310-401	5	KOSTKA VODICI / GUIDING CUBE / FÜHRUNGSKLOTZ	HR 80x50	1
8	90.001.25.143 (3)	0	SROUB IMBUS / HEXAGON SOCKET SCREW / IMBUSSCHRAUBE	M5X18	3
9	90.004.2D.002	0	SROUB STAVECI / SET SCREW / STELLSCHRAUBE	SROUB M6X12	1
10	90.005.55.015 (2)	0	SROUB 6HRANNY / HEX HEAD SCREW / SECHSKANTSCHRAUBE	SROUB M8X20	1
11	90.011.27.017	0	SROUB ZAPUSTNY / COUNTERSUNK SCREW / SENKSCHRAUBE	SROUB M6X16	2
12	90.100.55.005 (2)	0	MATICE PRESNA ZINEK / PRECISION NUT - ZN / PRÄZISE MUTTER - ZN	MATICE _ M8	1
13	90.101.55.002	0	MATICE PR.NIZKA ZN / PRECISION THIN NUT - ZN / PRÄZISE MUTTER NIEDRIGE - ZN	MATICE M10	2
14	90.150.50.006	0	PODLOZKA / WASHER / UNTERLEGSCHEIBE	PODLOZKA 10,5	2
15	90.154.50.001 (1)	0	PODLOZKA VYMEZOVACI / DISTANCE WASHER / AUSGLEICHSSCHEIBE	10x16x0.1	2
16	90.154.50.003 (3)	0	PODLOZKA VYMEZOVACI / DISTANCE WASHER / AUSGLEICHSSCHEIBE	10x16x0.50	2
17	90.301.0Z.009	0	KOLIK VALCOVY MEKKY / CYLINDRICAL PIN UNHARDENED / ZYLINDERSTIFT WEICH	KOLIK 10X26	1
18	90.350.0Z.005	0	PRUZINA TALIROVA / DISC SPRING / TELLERFEDER	20X10.2X1	6
19	95.001.004	0	LOZISKO / BEARING / LAGER	6000 2RS	1
20	95.001.014	0	LOZISKO / BEARING / LAGER	6200 2RS	4
21	95.800.002	0	KROUZEK POJIST.VNEJS / EXTERNAL RETAINING RING / SICHERUNGSRING AUßEN	POJISTNY KROUZEK 8	1

1.PRIDANA PODLOZKA 90.154.50.001. 277/ZM294 1.11.2010 SLEZACKOVA
2.ZRUS.SROUB M8x30(90.005.55.017) A NAHR.M8x20(90.005.55.015),ZRUS.MATICE M8(90.100.55.005) A NAHR.M8(90.101.55.001), ZRUS.SROUB M5x20(90.001.25.010) A NAHR.M8x18(90.001.25.143). 021/ZM041 5.2.2016 SLEZACKOVA
3.ZRUS 3x SROUB 90.001.25.010 A NAHR. 3x SROUB 90.001.25.143, PRID 2x PODLOZKA 90.154.50.003 201/ZM292 23.8.2021 KOVAR

Cislo Sestavy/Number of assembly/Nummer der Baugruppe; Verze (Ver.)/Version/Version; Nazev sestavy/Assembly title/Name der Baugruppe; Pozice (Poz.)/Position/Position;
Objednaci cislo/Purchase order number/Bestellnummer; Nazev polozky/Volume title/Name der Position; Rozmer/Stock size/Abmessung

7.34. Válec zvedací / Lifting cylinder / Hebezylinder

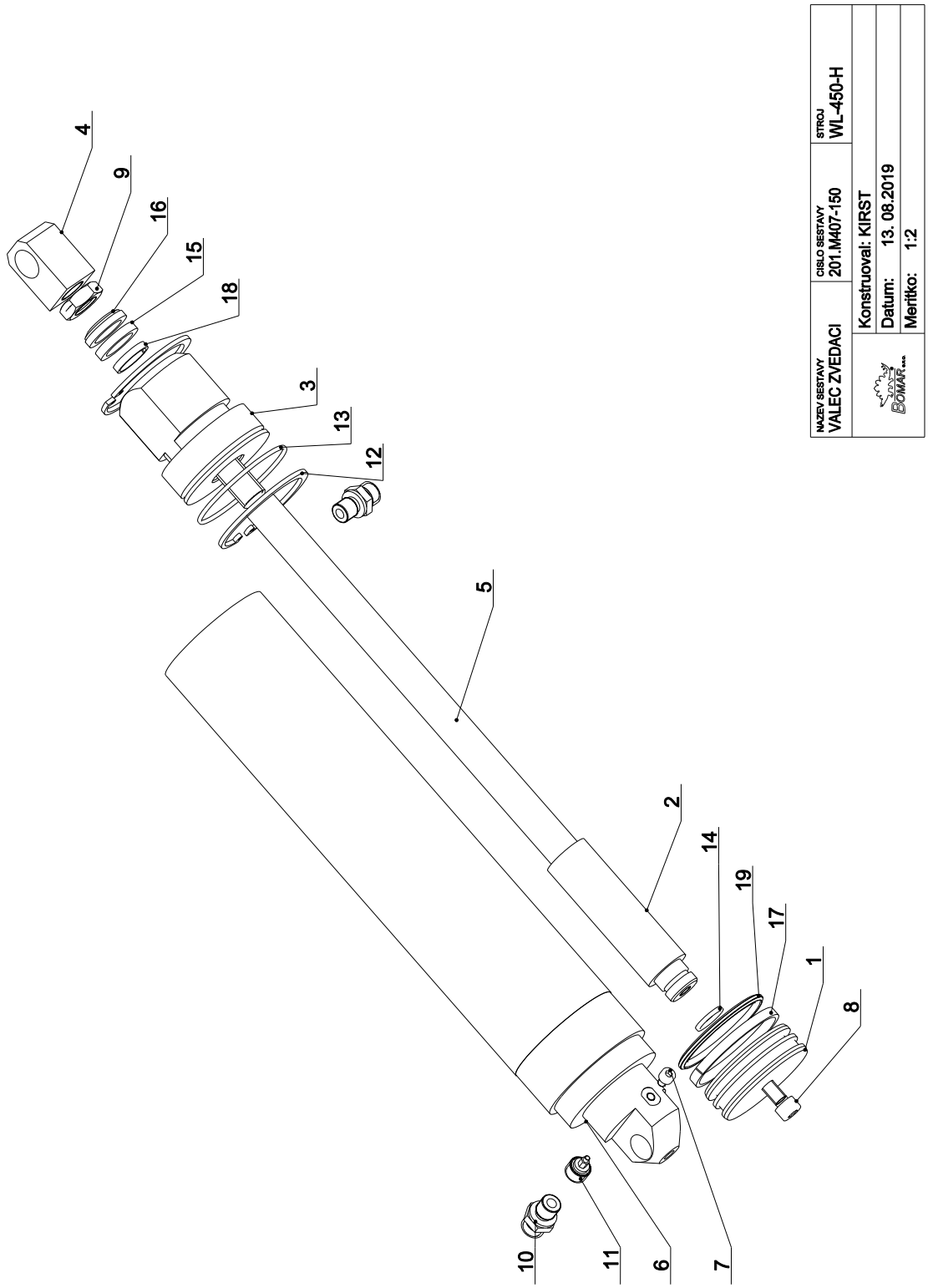

Cislo Sestavy	Ver.	Nazev sestavy
201.M407-150	0	VALEC ZVEDACI/LIFTING CYLINDER/HEBEZYLINDER

Poz.	Objednaci cislo	Ver.	Nazev polozky	Rozmer	Ks
1	30.2907-003	0	PIST / PISTON / KOLBEN	D 65	1
2	30.4807-013	0	TRUBKA / TUBE / ROHR	TR26x4	1
3	30.M307-153	0	VIKO / COVER / DECKEL	D65	1
4	30.M407-052	0	DRZAK / HOLDER / HALTER	HR 25x25	1
5	30.M407-154	0	PISTNICE / PISTON ROD / KOLBENSTANGE	d20	1
6	30.M407-160	0	VALEC ZVEDACI / LIFTING CYLINDER / HEBEZYLINDER		1
7	90.001.25.006	0	SROUB IMBUS / HEXAGON SOCKET SCREW / IMBUSSCHRAUBE	M5X6	1
8	90.001.25.032	0	SROUB IMBUS / HEXAGON SOCKET SCREW / IMBUSSCHRAUBE	8x20	1
9	90.101.55.003	0	MATICE PR.NIZKA ZN / PRECISION THIN NUT - ZN / PRÄZISE MUTTER NIEDRIGE - ZN	MATICE M16	1
10	92.002.001	0	SROUBENI PRIME / TUBE FITTING - STRAIGHT / GERADE VERSCHRAUBUNG	G 1/4"	2
11	92.151.008	0	VENTIL POJISTNY / SAFETY VALVE / SICHERUNGSVENTIL	VPN-H 1/4"	1
12	95.801.011	0	KROUZEK POJIST.VNITR / INERNAL RETAINING RING / SICHERUNGSRING INNEN	POJISTNY KROUZEK 63	2
13	96.001.016	0	O-KROUZEK STATICKY / O-RING STATIC / O-RING STATISCH	60X2	1
14	96.002.007	0	O-KROUZEK DYNAMICKY / O-RING DYNAMIC / O-RING DYNAMISCH	16x2 NBR 70SH	1
15	96.041.002	0	MANZETA / CUFF / MANSCHETTE	601-20x28x5	1
16	96.060.002	0	KROUZEK STIRACI / WIPER RING / ABSTREIFRING	KROUZEK STIRACI 20	1
17	96.084.002	0	KROUZEK VODICI / GUIDE RING / FÜHRUNGSRING	GP6500630-T47	1
18	96.084.006	0	KROUZEK VODICI / GUIDE RING / FÜHRUNGSRING	GR4300280-T47	1
19	96.900.016	0	TESNENI KOMBINOVANE / COMBINED SEALING / KOMBIDICHTUNG	PT0200630	1

1.ZRUSENO TESNENI 96.082.002. 236/ZM330 13.08.2019 KOSYK

Cislo Sestavy/Number of assembly/Nummer der Baugruppe; Verze (Ver.)/Version/Version; Nazev sestavy/Assembly title/Name der Baugruppe; Pozice (Poz.)/Position/Position;
Objednaci cislo/Purchase order number/Bestellnummer; Nazev polozky/Volume title/Name der Position; Rozmer/Stock size/Abmessung

7.36. Podstavec svěráku / Vice base / Schraubstockuntersatz

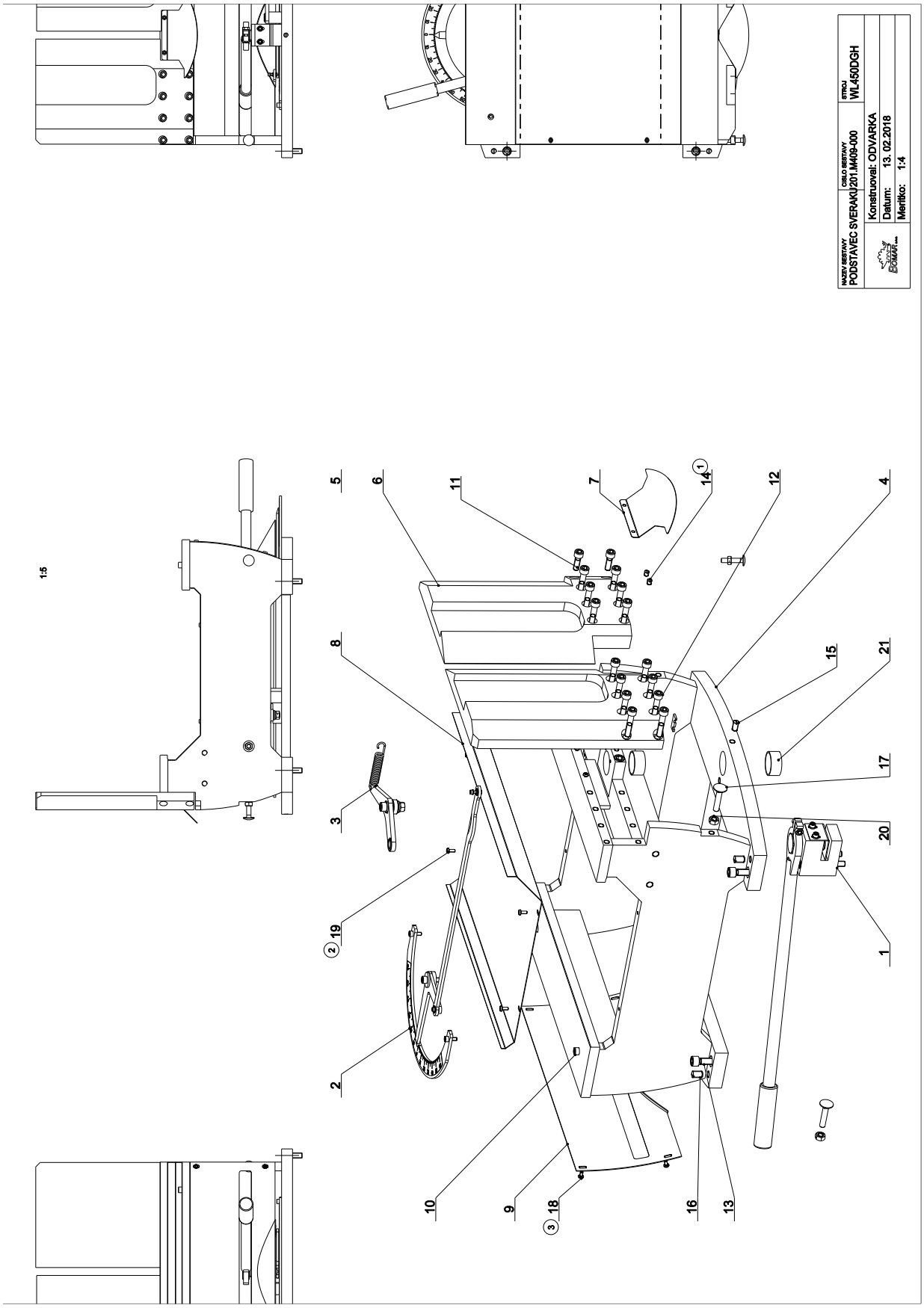

Cislo Sestavy	Ver.	Nazev sestavy
201.M409-000	0	PODSTAVEC SVERAKU/VICE BASE/SCHRAUBSTOCKUNTERSATZ

Poz.	Objednaci cislo	Ver.	Nazev polozky	Rozmer	Ks
1	201.M209-010	0	BRZDA / BRAKE / BREMSE		1
2	201.M409-020	0	ODMEROVANI / MEASURING / GEHRUNGSMESSUNG		1
3	201.M409-030	0	DORAZ / STOP PIECE / ANSCHLAG		1
4	30.M409-001	0	PODSTAVEC SVERAKU / VICE BASE / SCHRAUBSTOCKUNTERSATZ		1
5	30.M409-002	0	CELIST / JAW / BACKE	P 40x242	1
6	30.M409-003	0	CELIST / JAW / BACKE	P 40x242	1
7	30.M409-005	0	KRYT / COVER / ABDECKUNG	P 1x110	1
8	30.M409-006	0	KRYT / COVER / ABDECKUNG	P 1x498	1
9	30.M409-007	0	KRYT / COVER / ABDECKUNG		1
10	90.001.25.031	0	SROUB IMBUS / HEXAGON SOCKET SCREW / IMBUSSCHRAUBE	8x16	2
11	90.001.25.048	0	SROUB IMBUS / HEXAGON SOCKET SCREW / IMBUSSCHRAUBE	M10X30	2
12	90.001.25.052	0	SROUB IMBUS / HEXAGON SOCKET SCREW / IMBUSSCHRAUBE	M10X50	14
13	90.001.25.059	0	SROUB IMBUS / HEXAGON SOCKET SCREW / IMBUSSCHRAUBE	M12X35	4
14	90.002.2D.011 (1)	0	SROUB STAVECI / SET SCREW / STELLSCHRAUBE	SROUB M8X10	2
15	90.002.2D.015	0	SROUB STAVECI / SET SCREW / STELLSCHRAUBE	SROUB M10X20	1
16	90.002.2D.018	0	SROUB STAVECI / SET SCREW / STELLSCHRAUBE	SROUB M12X20	5
17	90.006.50.003	0	SROUB VRATOVY / LAG BOLT / SCHLOSSSCHRAUBE	SROUB M10X50	2
18	90.013.27.003 (3)	0	SROUB PULKULATY / BUTTON HEAD SCREW / RUNDKOPFSCHRAUBE	M5X10	6
19	90.013.27.004 (2)	0	SROUB PULKULATY / BUTTON HEAD SCREW / RUNDKOPFSCHRAUBE	M5X12	4
20	90.100.55.006	0	MATICE PRESNA ZINEK / PRECISION NUT - ZN / PRÄZISE MUTTER - ZN	MATICE _ M10	2
21	95.700.045	0	POUZDRO / SLEEVE / BÜCHSE	40x20	2

1.PRIDAN 2xSROUB STAVECI M8x10(90.002.2D.011). 219/ZM241 4.10.2013 SLEZACKOVA
2.PRIDAN 4xSROUB M5x12(90.013.27.004). 014/ZM068 13.2.2018 SLEZACKOVA
3.PRID 2x SROUB M5x10 90.013.27.003. 002/005 9.1.2019 SZABARI

Cislo Sestavy/Number of assembly/Nummer der Baugruppe; Verze (Ver.)/Version/Version; Nazev sestavy/Assembly title/Name der Baugruppe; Pozice (Poz.)/Position/Position;
Objednaci cislo/Purchase order number/Bestellnummer; Nazev polozky/Volume title/Name der Position; Rozmer/Stock size/Abmessung

7.38. Brzda / Brake / Bremse

Cislo Sestavy	Ver.	Nazev sestavy
201.M209-010	0	BRZDA/BRAKE/BREMSE

Poz.	Objednaci cislo	Ver.	Nazev polozky	Rozmer	Ks
1	30.M209-011	0	KOSTKA / CUBE / WÜRFEL	HR 70x50	1
2	30.M209-013	0	PLECH / SHEET METAL / BLECH	P 1,5x50	1
3	30.M209-014 (1)	0	SROUB 6HRANNY / HEX HEAD SCREW / SECHSKANTSCHRAUBE	SROUB M24X50	1
4	30.LC02-003	0	PAKA / LEVER / HEBEL	SVARENO	1
5	90.001.25.103	0	SROUB IMBUS / HEXAGON SOCKET SCREW / IMBUSSCHRAUBE	M10X75	2
6	90.001.25.016	0	SROUB IMBUS / HEXAGON SOCKET SCREW / IMBUSSCHRAUBE	M6X12	2
7	90.150.50.004	0	PODLOZKA / WASHER / UNTERLEGSCHEIBE	PODLOZKA 6,4	2
8	94.004.502	0	RUKOJET / HANDLE / GRIFF	D22	1
9	90.100.55.005	0	MATICE PRESNA ZINEK / PRECISION NUT - ZN / PRÄZISE MUTTER - ZN	MATICE M8	1
10	90.005.55.017	0	SROUB 6HRANNY / HEX HEAD SCREW / SECHSKANTSCHRAUBE	SROUB M8X30	1

1.ZRUSEN SROUB M24x50(90.005.55.063 A NAHR.30.M209-014. 211/ZM247 29.10.2015 SLEZACKOVA

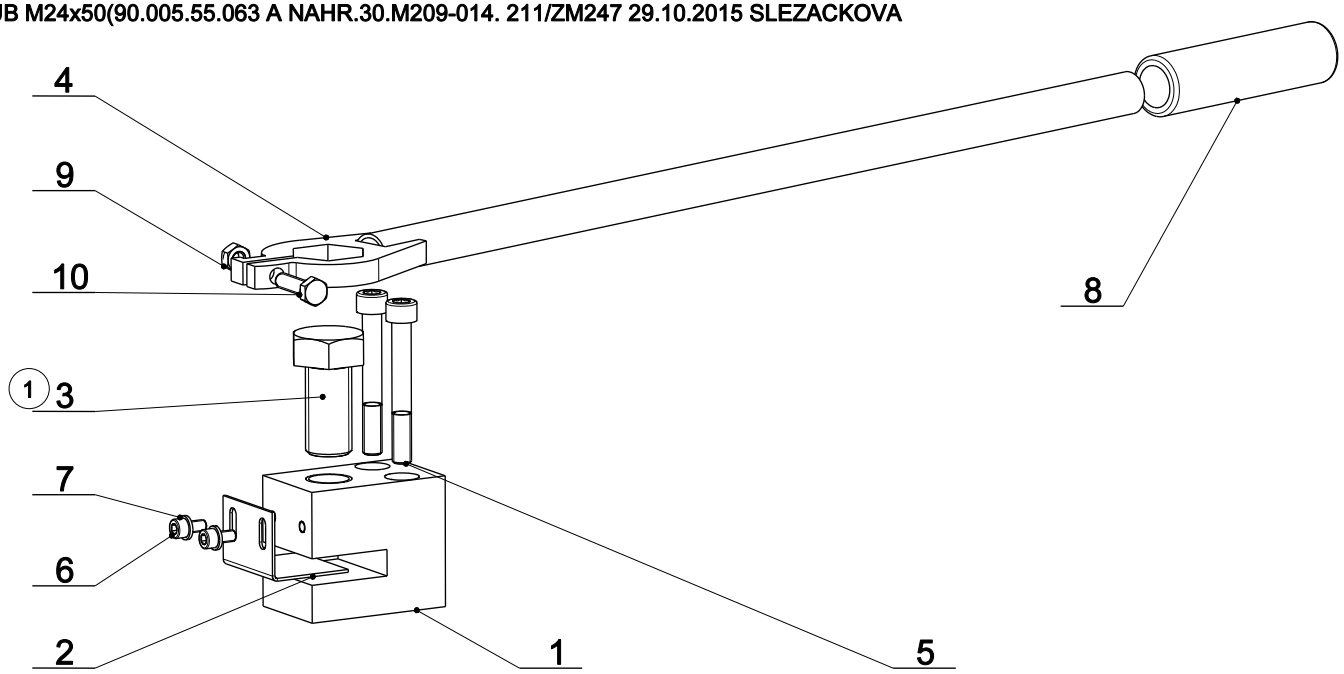

Cislo Sestavy/Number of assembly/Nummer der Baugruppe; Verze (Ver.)/Version/Version; Nazev sestavy/Assembly title/Name der Baugruppe; Pozice (Poz.)/Position/Position;
Objednaci cislo/Purchase order number/Bestellnummer; Nazev polozky/Volume title/Name der Position; Rozmer/Stock size/Abmessung

Cislo Sestavy	Ver.	Nazev sestavy
201.M409-020	0	ODMEROVANI/MEASURING/GEHRUNGSMESSUNG

Poz.	Objednaci cislo	Ver.	Nazev polozky	Rozmer	Ks
1	30.M209-021	0	CEP / PIVOT / BOLZEN	d 30	1
2	30.M209-022	0	UKAZATEL / INDICATOR / ZEIGER	P 5x113	1
3	30.M209-023	0	PLECH / SHEET METAL / BLECH	P 5x180	1
4	30.M209-027	0	STUPNICE / SCALE / SKALA	P 0,5x111	1
5	30.M409-029	0	TYC / POLE / STANGE	P 5x28	1
6	90.001.25.003	0	SROUB IMBUS / HEXAGON SOCKET SCREW / IMBUSSCHRAUBE	M4X12	1
7	90.001.25.004	0	SROUB IMBUS / HEXAGON SOCKET SCREW / IMBUSSCHRAUBE	M4X16	1
8	90.001.25.017	0	SROUB IMBUS / HEXAGON SOCKET SCREW / IMBUSSCHRAUBE	M6X16	2
9	90.001.55.083	0	SROUB IMBUS / HEXAGON SOCKET SCREW / IMBUSSCHRAUBE	M8X30	1
10	90.100.55.002	0	MATICE PRESNA ZINEK / PRECISION NUT - ZN / PRÄZISE MUTTER - ZN	MATICE _ M4	1
11	90.150.50.002	0	PODLOZKA / WASHER / UNTERLEGSCHEIBE	PODLOZKA 4,3	5
12	90.151.50.005	0	PODLOZKA VELKOPL. / LARGE WASHER / GROßFLÄCHENSCHEIBE	PODLOZKA 8	1
13	95.001.002	0	LOZISKO / BEARING / LAGER	624 2RS	2

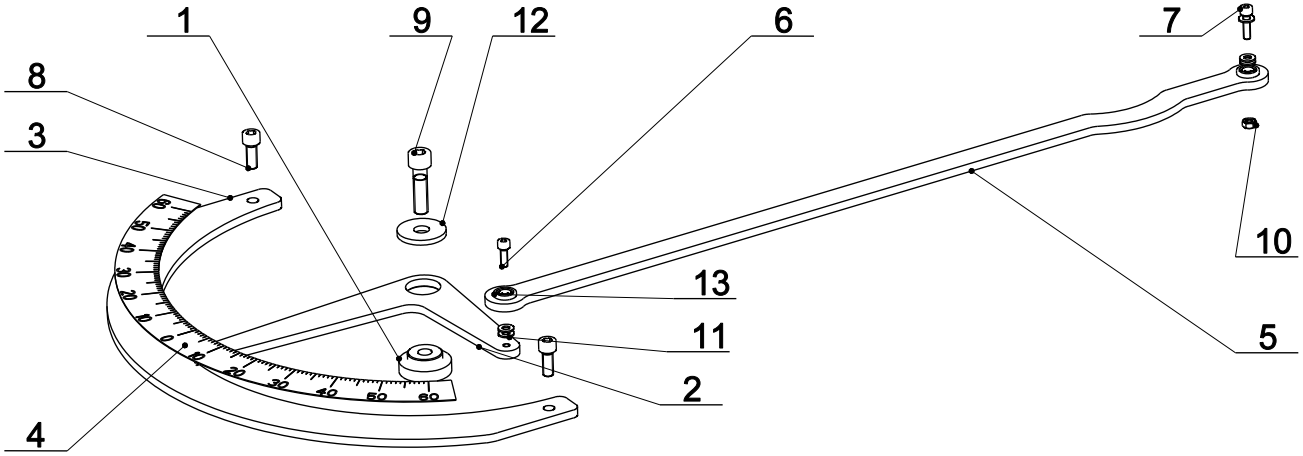

Cislo Sestavy/Number of assembly/Nummer der Baugruppe; Verze (Ver.)/Version/Version; Nazev sestavy/Assembly title/Name der Baugruppe; Pozice (Poz.)/Position/Position;
Objednaci cislo/Purchase order number/Bestellnummer; Nazev polozky/Volume title/Name der Position; Rozmer/Stock size/Abmessung

7.40. Doraz / Stop piece / Anschlag

Cislo Sestavy	Ver.	Nazev sestavy
201.M409-030	0	DORAZ/STOP PIECE/ANSCHLAG

Poz.	Objednaci cislo	Ver.	Nazev polozky	Rozmer	Ks
1	30.M409-031	0	PAKA / LEVER / HEBEL	P 8x69	1
2	31.0206-005	0	PRUZINA / SPRING / FEDER	2.50x16x90x27	1
3	90.001.25.049 (1)	0	SROUB IMBUS / HEXAGON SOCKET SCREW / IMBUSSCHRAUBE	M10X35	1
4	90.100.55.006 (1)	0	MATICE PRESNA ZINEK / PRECISION NUT - ZN / PRÄZISE MUTTER - ZN	MATICE _ M10	1
5	90.150.50.006 (1)	0	PODLOZKA / WASHER / UNTERLEGSCHEIBE	PODLOZKA 10,5	4
6	90.152.50.003 (1)	0	PODLOZKA VEJIROVA / FAN WASHER / FÄCHERSCHEIBE	PODLOZKA 10.5	1
7	95.001.004	0	LOZISKO / BEARING / LAGER	6000 2RS	1
8	95.800.008	0	KROUZEK POJIST.VNEJS / EXTERNAL RETAINING RING / SICHERUNGSRING AUßEN	POJISTNY KROUZEK 18	1

1.ZRUS.SROUB M10x30(90.001.25.048) A NAHR.M10x35(90.001.25.049),ZRUS.PODLOZKA 90.163.00.011 A NAHR.90.150.50.006, ZRUS.PODLOZKA 90.163.004 A NAHR..90.150.50.006 A 90.152.50.003, PRID.2xPODLOZKA 90.100.55.006,ZRUS.MATICE 90.101.55.002 A NAHR.90.101.55.006. 288/ZM042 25.1.2018 SLEZACKOVA

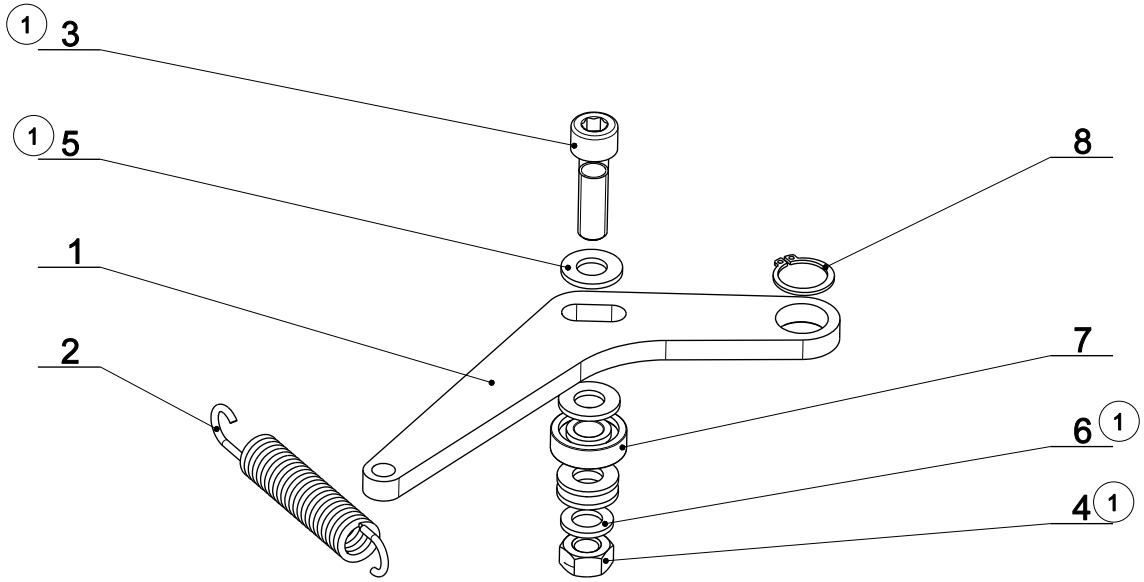

Cislo Sestavy/Number of assembly/Nummer der Baugruppe; Verze (Ver.)/Version/Version; Nazev sestavy/Assembly title/Name der Baugruppe; Pozice (Poz.)/Position/Position;
Objednaci cislo/Purchase order number/Bestellnummer; Nazev polozky/Volume title/Name der Position; Rozmer/Stock size/Abmessung

NÁZEV SESTAVY	ČÍSLO SESTAVY	REVIZE	Kategorie: -	
LASER-UKAZOVATKO	201.9121-100 List/Listů: 1/2	0 0.2	Datum: 16.12.2022	Konstruktér: ZINDULKA

-

pos.	číslo výkresu	verze	množství	název	polotovar	jakost	pov.upr.	váha	poznámka
1	30.5010-001	1	1	DRZAK	HR55x20 - 36 40.550.00.28	AW2017		0.2	
2	30.5010-004	1	1	KLOUB	KGLM-12 95.705.001			0.0	
3	30.9204-107	0	1	DRZAK	SVARENO		CERNIT	0.6	
4	30.Y330-033	1	1	STITEK	LASER 30.Y399-110			0.0	
5	90.002.2D.003	0	2	SROUB STAVECI	5x6 DIN 913 45H černěn			0.0	
6	91.060.037	0	1	HLAVICE	M22 - WKV přepínač 2 polohy Moeller			0.1	
7	91.062.009	0	1	STITEK	držák pod tl.Meller F-MO M22S-ST-X 216392			0.0	
8	91.100.109	0	1	LASER-UKAZOVATKO	24V AC/DC ukazovátko CL24-vypínač IP65			0.2	

INDEX ZMĚNA DATUM PODPIS

DILY BEZ MODELU

91.061.021 ADAPTER
91.142.032 KABEL
91.230.037 POJISTKA

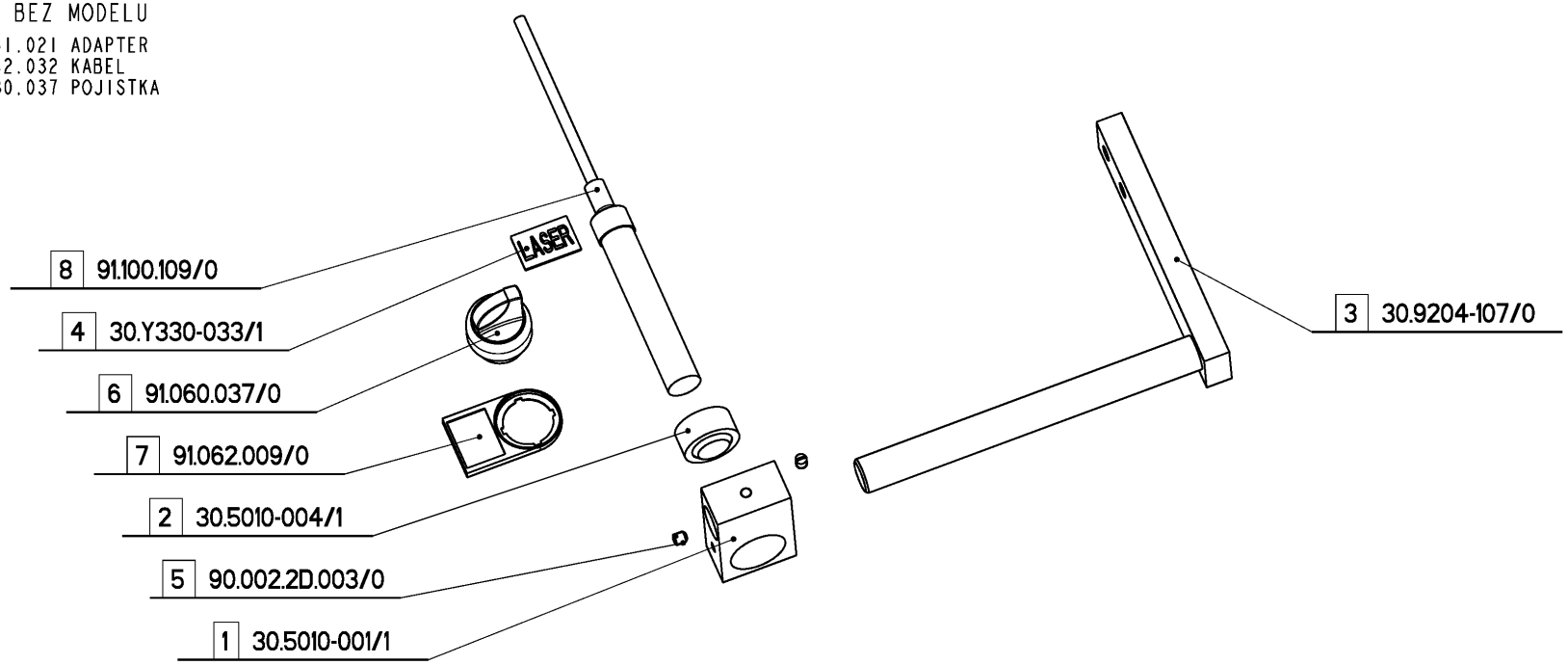

Číslo Sestavy/Number of assembly/Nummer der Baugruppe; Verze (Ver.)/Version/Version; Název sestavy/Assembly name/Name der Baugruppe; Datum/Date/Datum; Kontrukter/Designer/Konstrukteur;Číslo výkresu/Drawing number/Zeichnung nummer; Název/Name/Name; Polotovar/Semiproduct/Halbfabrikat; Vstupní materiál(Vstupní mat.)/Default material/Eingangsmaterial; Jakost/Norm/Norm; Pov. úpr./Surface finish/Oberflächengüte;Váha/Weight/Gewicht; Poznámka/Note/Notiz

7.41.2. Upínání horní / Top clamping / Spannvorrochtung oben

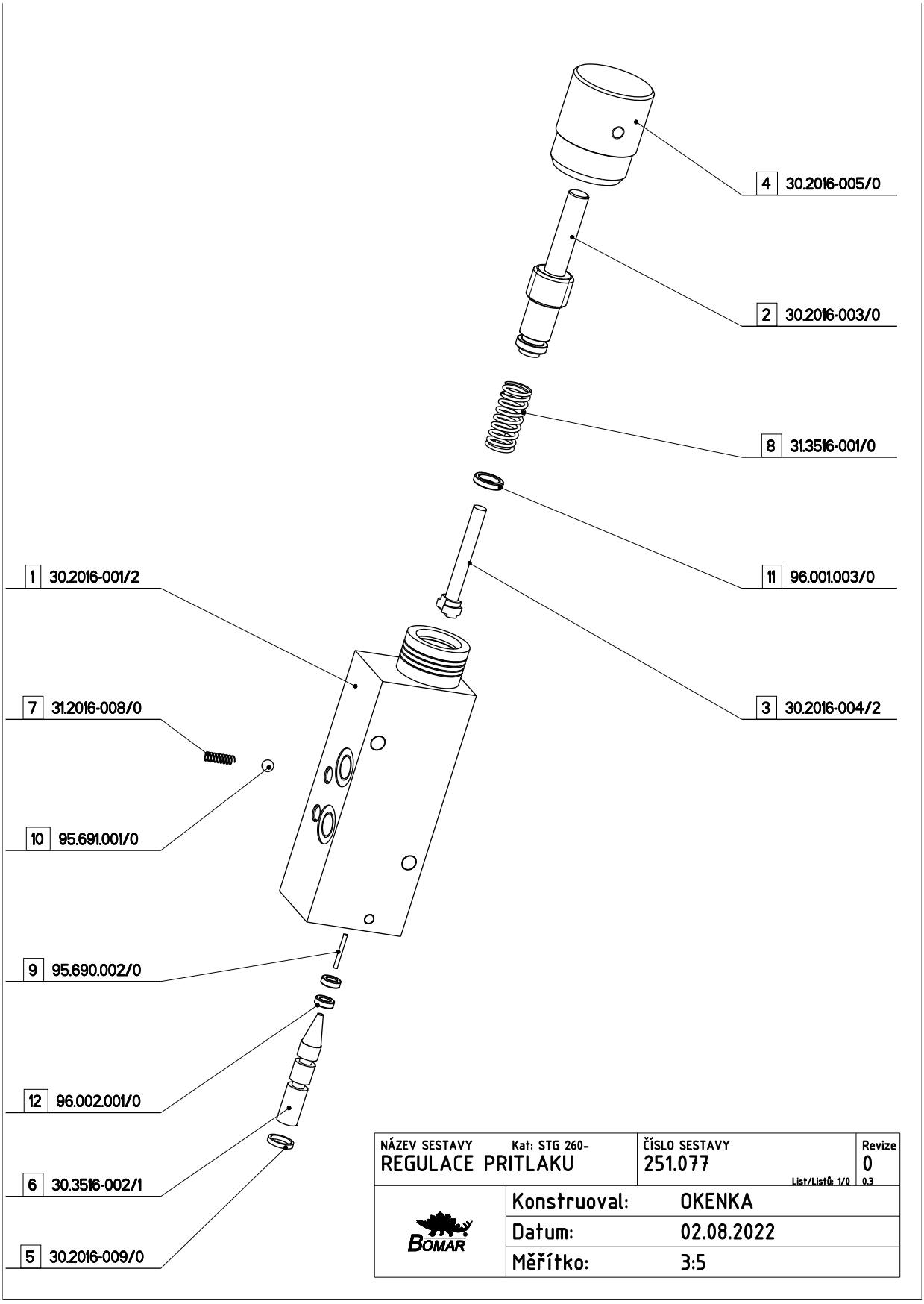

NÁZEV SESTAVY	ČÍSLO SESTAVY	REVIZE	Kategorie: STG 260-	
REGULACE PRITLAKU	251.077 List/Listů: 2/0	0 0.3	Datum: 02.08.2022	Konstruktér: OKENKA

-

pos.	číslo výkresu	verze	množství	název	polotovar	jakost	pov.upr.	váha	poznámka
1	30.2016-001	2	1	TELESO	HR40x30 - 118 40.560.00.03	AlCu4PbMg		0.9	
2	30.2016-003	0	1	SROUB	TZM16x2P - 69 40.900.02.04	8,8 černá		0.0	
3	30.2016-004	2	1	*	D10 - 45 40.140.04.03	11600		0.0	
4	30.2016-005	0	1	KOLECKO	D32 - 40 40.540.00.06	ENAW2017		0.0	
5	30.2016-009	0	1	KROUZEK	TR 10x1	11 373		0.0	
6	30.3516-002	1	1	JEHLA	D8 - 46 40.850.00.03	14109		0.0	
7	31.2016-008	0	1	PRUZINA	kuličky0.25x3.6x12x9			0.0	
8	31.3516-001	0	1	PRUZINA	čidla1.25x11.6x34x9			0.0	
9	95.690.002	0	1	JEHLA	VL NRB 1,5x13,8 G2			0.0	
10	95.691.001	0	1	KULICKA LOZISKA	KC 4,5 G100			0.0	
11	96.001.003	0	1	O-KROUZEK STATICKY	8x2 NBR 70Sh 8x2 NBR 70Sh			0.2	
12	96.002.001	0	2	O-KROUZEK DYNAMICKY	4x2 NBR 70Sh 4x2 NBR 70Sh			0.2	

INDEX ZMĚNA DATUM PODPIS

Číslo Sestavy/Number of assembly/Nummer der Baugruppe; Verze (Ver.)/Version/Version; Název sestavy/Assembly name/Name der Baugruppe; Datum/Date/Datum; Kontrukter/Designer/Konstrukteur;Číslo výkresu/Drawing number/Zeichnung nummer; Název/Name/Name; Polotovar/Semiproduct/Halbfabrikat; Vstupní materiál(Vstupní mat.)/Default material/Eingangsmaterial; Jakost/Norm/Norm; Pov. úpr./Surface finish/Oberflächengüte;Váha/Weight/Gewicht; Poznámka/Note/Notiz

Cislo Sestavy	Ver.	Nazev sestavy
262.012	0	ODMEROVANI/MEASURING/GEHRUNGSMESSUNG

Poz.	Objednaci cislo	Ver.	Nazev polozky	Rozmer	Ks
1	30.0614-207	0	CEP / PIVOT / BOLZEN	d 18	1
2	31.0614-202	0	KRABICE / BOX / BOX	VYLISEK-PLAST	1
3	31.0614-205	0	VIKO / COVER / DECKEL	VYLISEK-PLAST	1
4	91.070.010	0	VYVODKA KLESTINOVA / COLLET WITH OUTLET / SPANNZANGENTÜLLE	M12x1.5 CERNA	1
5	96.001.020	0	O-KROUZEK STATICKY / O-RING STATIC / O-RING STATISCH	9x1	1
6	96.001.021	0	O-KROUZEK STATICKY / O-RING STATIC / O-RING STATISCH	11x1	1
7	96.002.027	0	O-KROUZEK DYNAMICKY / O-RING DYNAMIC / O-RING DYNAMISCH	50x1	1

1.ZRUSEN CEP 30.0614-201 A NAHRAZEN 30.0614-207. 019/ZM014 20.1.2022 SLEZACKOVA

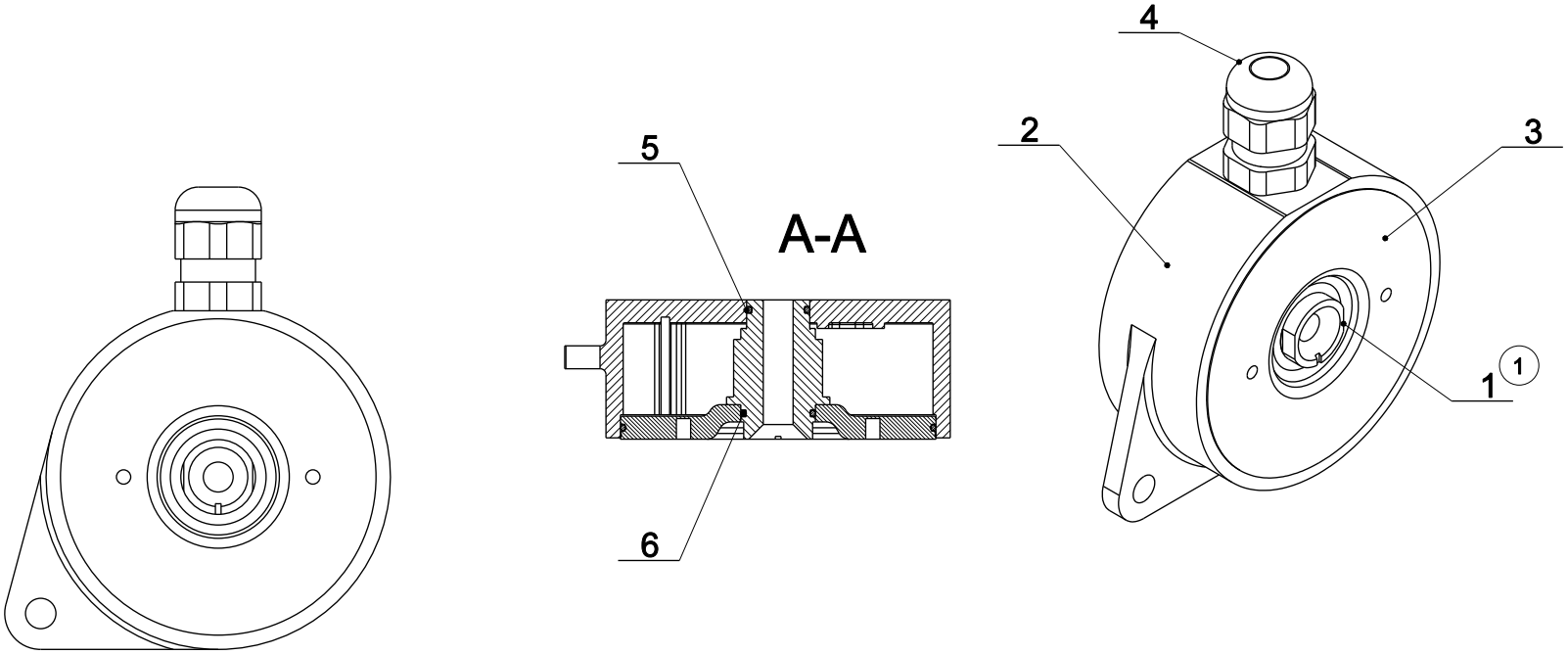

Cislo Sestavy/Number of assembly/Nummer der Baugruppe; Verze (Ver.)/Version/Version; Nazev sestavy/Assembly title/Name der Baugruppe; Pozice (Poz.)/Position/Position;
Objednaci cislo/Purchase order number/Bestellnummer; Nazev polozky/Volume title/Name der Position; Rozmer/Stock size/Abmessung